Rev	ECO	Description	Appr.	Date

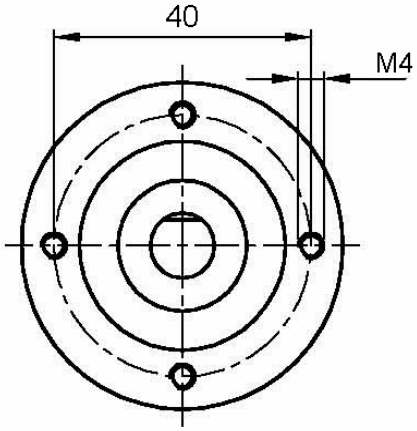

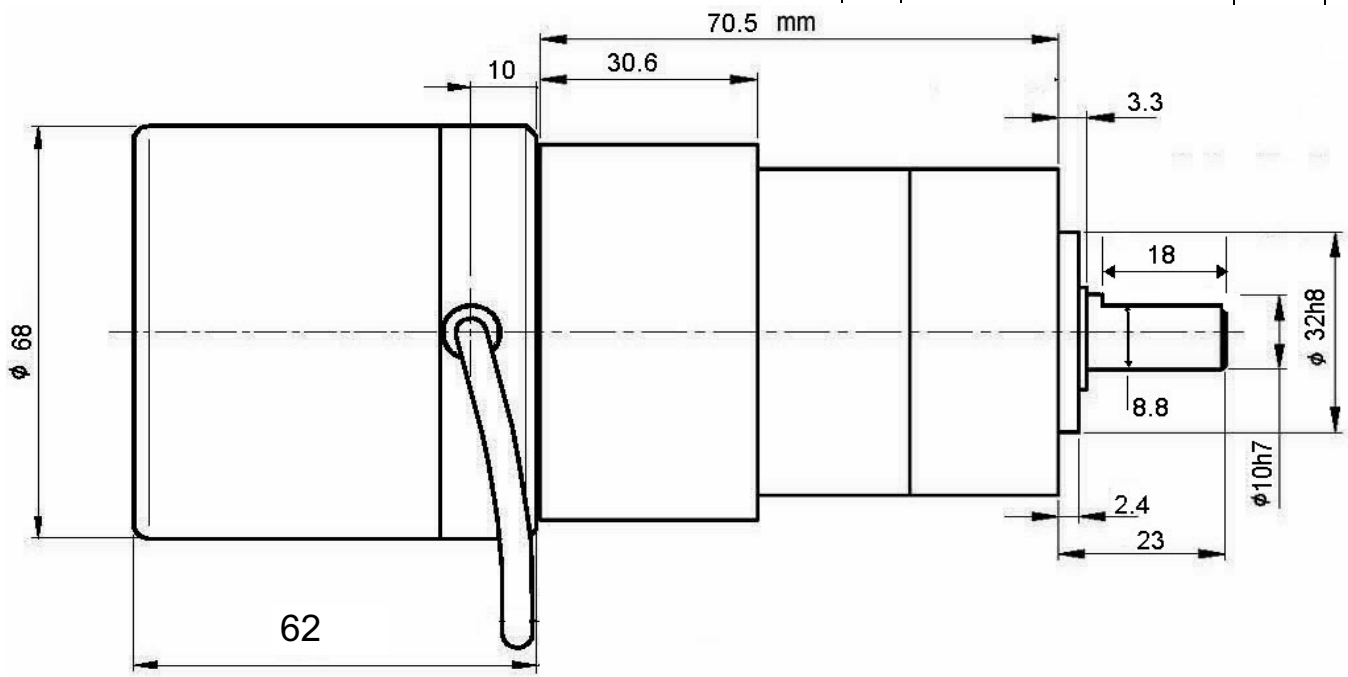

Motor Specification

Voltage DC	V	24
No Load Speed	rpm	6,000
No Load Current	amps	0.26
Nominal Speed	rpm	4,000
Nominal Current	amps	3.4
Nominal Torque	mNm	114
Output Power	W	50

Planetary Gearbox

Gear ratio		25 :1
Output Bearings		Ball
Number of Stages		2
Gearbox rating	Nm	18

M 58013 -P50M0025

No Load Output Speed	RPM	240
No Load current	amps	0.45
Nominal Output speed	rpm	160
Nominal Output Torque	mNm	1650
Nominal Output current	amps	3.4
Weight	Kg	1.1

Motor Part number:	M 580xxx-P50Mxxxx		
Date Code	year	month	date
	xx	xx	xx

This Document is Property of MJK, Inc. Its use is to authorized only for responding to a request for Quotation or for the performance of work for MJK, Inc.

Material:	Approval: Date	**MJK, Inc.** 396 Chase Parkway, Waterbury, CT. 06708 USA www: mjkinc.net email: inquiry@mjkinc.net
Material:	Approval: Date	Title: Brushless DC motor Planetary Gearbox
Dimensions are in Inches / mm	Approval: Date	
Tolerances Unless Specified: .X = ± 0.03 / 0.75 .xx = ± 0.01 / 0.25 .xxx = ± 0.005 / 0.13 Angular 5º	Approval: Date	DWG. NO. REV 58013-P50M0025
	Drawn By: Date	DO NOT SCALE DRAWING