Rev	ECO	Description	Appr.	Date

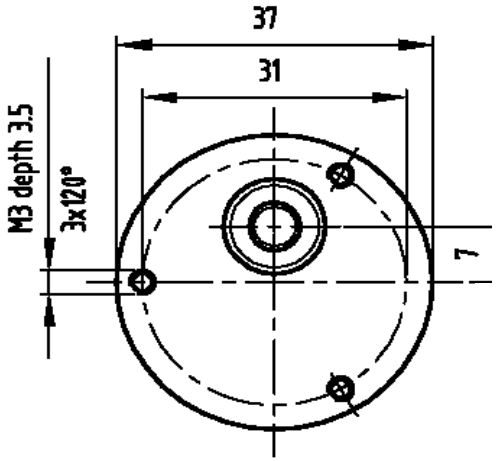

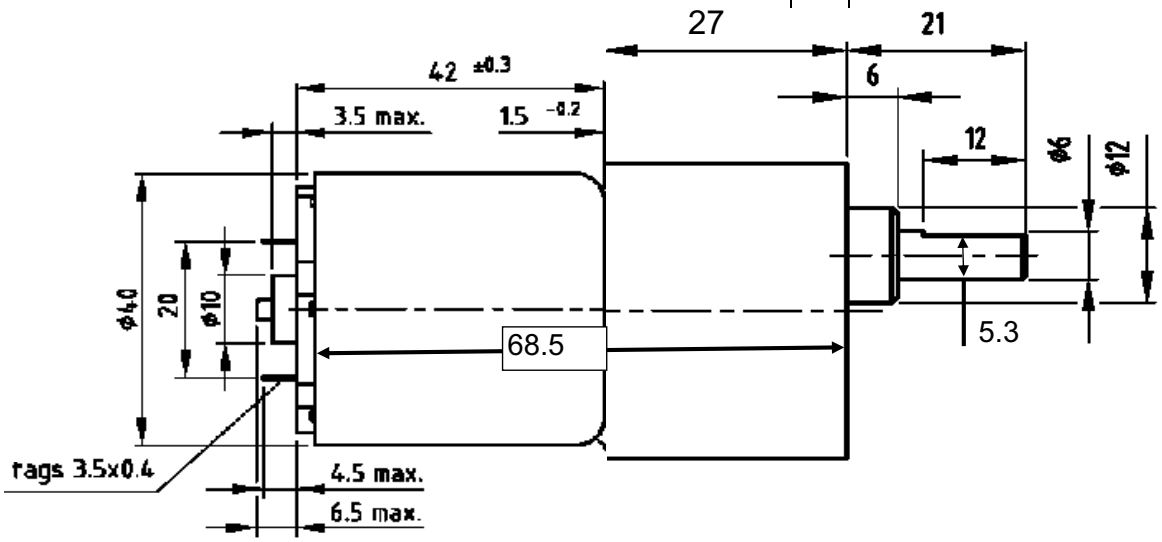

Motor 9904 120 15601 Specification

Voltage DC	V	12
No Load Speed	rpm	5,280
No Load Current	amps	0.049
Nominal Speed	rpm	4,140
Nominal Current	amps	1.25
Nominal Torque	mNm	26
Output Power	W	12

Spur gearbox

Gear ratio		30 :1'
Output Bearings		Sleeve
Number of Stages		3
Gearbox Output Torque continuous	Nm	0.6

M15601-S37M0030

No Load Output Speed	176	rpm
No Load current	0.4	amps
Nominal Output speed	138	rpm
Nominal Output Torque	780	mNm
Weight	284	grams

Motor Part number:	M15601-S37M0030		
Date Code	year	month	date
	xx	xx	xx

This Document is Property of MJK, Inc. Its use is to authorized only for responding to a request for Quotation or for the performance of work for MJK, Inc.

Material:	Approval: Date	**MJK, Inc.** 396 Chase Parkway, Waterbury, CT. 06708 USA www: mjkinc.net email: inquiry@mjkinc.net
Material:	Approval: Date	Title: Coreless DC motor Spur gearbox
Dimensions are in Inches / mm	Approval: Date	
Tolerances Unless Specified: .X = ± 0.03 / 0.75 .xx = ± 0.01 / 0.25 .xxx = ± 0.005 / 0.13 Angular 5°	Approval: Date	DWG. NO. 15601-S37M0030 REV
	Drawn By: Date	DO NOT SCALE DRAWING