First Medical Source

Delivering Safe & Effective Infusion Systems

Better Care for Better Life. InfuLife®

InfuLife® Ambulatory Infusion System

Clinical Guide



TABLE OF CONTENTS

WHAT IS THE INFULIFE AMBULATORY INFUSION SYSTEM?

How does it work? 1

PREPARING THE INFULIFE AMBULATORY INFUSION SYSTEM

Which InfuLife System is right for my patient? 3
Drug Stability 3
Fill Volume and Delivery Times – antibiotics 4
Fill Volume and Delivery Times - chemotherapy 5
Filling Instructions 6
Priming the Administration Tubing 6
Filling/Priming with Drugs prone to Precipitation 6
Storage 7
Starting the Infusion 7
During the Infusion 8
End of Infusion 8

FREQUENTLY ASKED QUESTIONS 9

TROUBLESHOOTING 10

WHAT IS THE INFULIFE AMBULATORY INFUSION SYSTEM?

The InfuLife® System is a disposable elastomeric pump for continuous infusion of antibiotics, chemotherapy and pain-management medications in the hospital, at home or in alternate-site care. See the InfuLife® Drug Stability Reference (PMP-1107) for published stability information.

HOW DOES IT WORK?

The InfuLife System consists of a balloon type, elastomeric membrane which holds the medication. The rate is controlled by restrictive tubing (rates above 5 ml per hr) or by a combination of this tubing and an additional glass flow restrictor at the end of the tubing (rates 2 ml/hr and lower). The balloon provides the pressure to automatically infuse the medication at a preset flow rate. The rate delivers within ±9% (antibiotic, high-flow models) or ±12% (chemotherapy and pain-management, low-flow models) of the labeled flow rate when used according to the manufacturer's recommendations.

TYPICAL FLOW RATE

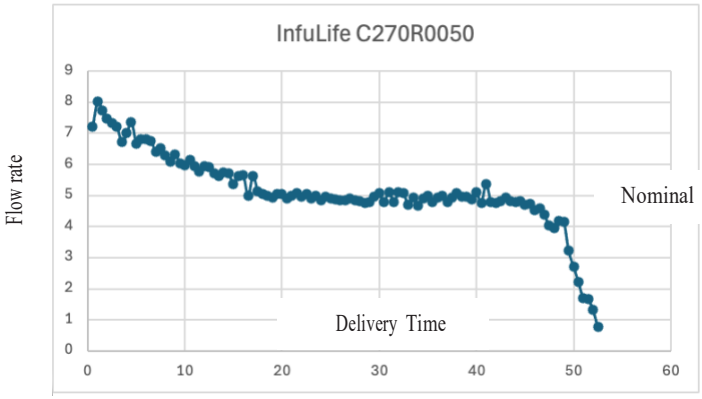

YOUR PATIENT'S THERAPY WILL DETERMINE WHICH INFULIFE SYSTEM TO USE: See available models in the InfuLife Catalog.

InfuLife Item List:

1. Soft outer cover
2. Elastomeric bladder
3. Label: Volume, Lot, UDI
4. Filling connector
5. Cap with Strap connector
6. Clamp, On/Off
7. PVC tube, non-DEHP
8. Label: Flow Rate ml/h
9. Filter 1.2-micron, air eliminating
10. Flow control, distal connector
11. Cap, distal connector

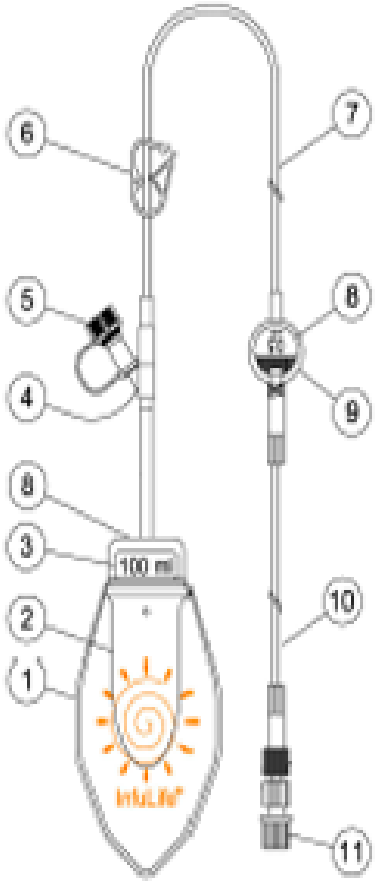

PREPARING THE INFULIFE AMBULATORY INFUSION SYSTEM

WHICH INFULIFE SYSTEM IS RIGHT FOR MY PATIENT?

The InfuLife System is available in a wide variety of volumes and flow rates. Please review the Tables on pages 4 through 7 to determine the InfuLife System that is best suited for your patient's required therapy.

DRUG STABILITY

First Medical Source publishes a drug stability reference (PMP-1107) compiled from published studies of drugs in elastomeric infusion devices, drug-compatibility references and drug manufacturers' information. Unless otherwise indicated, the studies were not performed in InfuLife® pumps. The pharmacist is responsible for determining the suitability of each admixture and its storage conditions, and for preparing it using validated aseptic technique (USP <797> Pharmaceutical Compounding – Sterile Preparations).

FILL VOLUMES AND DELIVERY TIMES

Use the chart on the following page to determine the appropriate fill volume per system model to achieve the desired delivery time. Typical residual volume is 5 ml, consequently, the fill volumes are calculated by adding 5 ml to the desired infusion volume.

⚠ **CAUTION:** The delivery times are approximate.

- Due to the linearity of the flow profile, filling the pump more or less than the nominal fill volume as specified by the chart, will not significantly impact the flow rate.
- Do not fill the pump less than the minimal or more than the maximum fill volume specified on the chart.

NOTE:

- The InfuLife System nominal flow rates are based on the use of normal saline as the diluent. Addition of any drug or use of another diluent may change viscosity and result in increased or decreased flow rate.
- Use of 5% dextrose will result in 10% longer delivery time.

InfuLife®, Antibiotic Fill Volume Guide

Planned Rate	50	100	200	100	175	250	100	200
Nominal Volume	100	100	100	250	250	250	400	400
Expected Duration (hrs)	2	1	0.5	2.5	1.4	1	4	2
Time (hrs) needed to reach room temperature after refrigeration	**2h:30 min**	**2h:30 min**	**2h:30 min**	**3h:30 min**	**3h:30 min**	**3h:30 min**	**4 hrs**	**4 hrs**
Model	**C100R0500**	**C100R1000**	**C100R2000**	**C250R1000**	**C250R1750**	**C250R2500**	**C400R1000**	**C400R2000**
Volume and Rate	**100ml x 50ml/hr**	**100ml x 100ml/hr**	**100ml x 200ml/hr**	**250ml x 100ml/hr**	**250ml x 175ml/hr**	**250ml x 250ml/hr**	**400ml x 100ml/hr**	**400ml x 200ml/hr**
Approx. Delivery Time	**Fill Volume (ml) = Volume to be infused + 5 ml. Expected residual: 5 ml**							
00:15 h			**55**					
00:30 h			**105**					
00:37 h			**128**					
00:45 h		**80**				**193**		
01:00 h		**105**				**255**		
01:15 h		**130**				**318**		
01:20 h	**72**				**238**			
01:30 h	**80**				**268**			
01:35 h	**84**				**282**			
01:40 h	**88**				**297**			
01:45 h	**93**							**355**
02:00 h	**105**			**205**				**405**
02:15 h	**118**			**230**				**455**
02:30 h				**255**				
02:35 h				**263**				
02:40 h				**272**				
03:00 h							**305**	
04:00 h							**405**	
04:45 h							**480**	

PMP-1103 Rev C

Caution Duration may vary up to +/-9% from the target. The further the fill volume is from the nominal fill volume, the lower the accuracy.

Read product Instructions for Use for full instructions on using the InfuLife System.

To find appropriate model for desired infusion time, find infusion time in the left column then slide across to find the desired fill volume and to the top (white print on black background) for possible model numbers. The mos
appropriate model will have a fill volume nearest to its nominal value plus 5 ml residual.

InfuLife®, Chemotherapy Fill Volume Guide

Planned Rate	0.5	1	1.5	2	2	4	5	1	2	4	5	10	2	4	5	10
Nominal Volume	100	100	100	100	120	120	125	270	270	270	270	270	300	400	400	400
Expected Duration (hrs)	200	100	66.7	50	60	30	25	270	135	67.5	54	27	150	100	80	40
Time (hrs) needed to reach room temperature after refrigeration	**2h:30 min**	**2h:30 min**	**2h:30 min**	**2h:30 min**	**2h:40 min**	**2h:40 min**	**2h:40 min**	**3h:30 min**	**3h:30 min**	**3h:30 min**	**3h:30 min**	**3h:30 min**	**3h:40 min**	**4 hrs**	**4 hrs**	**4 hrs**
Model	**C100R0005**	**C100R0010**	**C100R0015**	**C100R0020**	**C120R0020**	**C120R0040**	**C125R0050**	**C270R0010**	**C270R0020**	**C270R0040**	**C270R0050**	**C270R0100**	**C300R0020**	**C400R0040**	**C400R0050**	**C400R0100**
Approx. Delivery Time	**Fill Volume (ml) = Volume to be infused + 5 ml. Expected residual: 5 ml**															
12 hrs																
18 hrs							**95**									
22 hrs						**93**	**115**					**225**				
24 hrs	**1 day**					**101**	**125**					**245**				
30 hrs						**125**	**155**					**305**				
38 hrs				**81**		**157**										**385**
44 hrs				**93**												**445**
46 hrs				**97**							**235**					
48 hrs	**2 days**		**77**	**101**	**101**						**245**					
60 hrs			**95**	**125**	**125**					**245**	**305**					
72 hrs	**3 days**	**77**	**113**		**149**					**293**					**365**	
96 hrs	**4 days**	**101**							**197**					**389**	**485**	
120 hrs	**5 days**	**125**							**245**					**485**		
132 hrs	**5.5 days**								**269**				**269**			
144 hrs	**6 days**								**293**				**293**			
168 hrs	**7 days**	**89**											**341**			
192 hrs	**8 days**	**101**														
216 hrs	**9 days**	**113**														
240 hrs	**10 days**	**125**						**245**								
264 hrs	**11 days**							**269**								
288 hrs	**12 days**							**293**								
312 hrs	**13 days**															

PMP-1103 Rev C

Caution Duration may vary up to +/-12% from the target. The further the fill volume is from the nominal fill volume, the lower the accuracy.

Read product Instructions for Use for full instructions on using the InfuLife System. To find appropriate model for desired infusion time, find infusion time in the left column then slide across to find the desired fill volume a
print on black background) for possible model numbers. The most appropriate model will have a fill volume nearest to its nominal value plus 5 ml residual.

FILLING INSTRUCTIONS

USE ASEPTIC TECHNIQUE



1 Remove the cap from the fill port. It is tethered to remain in place for later use.

2 The InfuLife System can be filled with a syringe or similar device. Remove all air from the filling device and attach securely to the fill port.

3 Attach the filled syringe to the fill port and push down on the plunger continuously until the volume is dispensed. Repeat as necessary to reach desired fill volume. InfuLife is designed to minimize the required filling effort.

4 Close the clamp on the tubing. Fill the InfuLife System with no more than the recommended maximum fill volume.

5 Remove filling device from the fill port.

6 Securely replace fill port cap. Ensure that the distal end cap on the tubing is tight.

7 Label with appropriate pharmaceutical and patient information.

PRIMING THE ADMINISTRATION TUBING

USE ASEPTIC TECHNIQUE

1 Remove the cap from the distal end of the tubing.

2 Open tubing clamp. Fluid will begin to flow, filling the tubing set. When all air has been expelled from the tubing set, close the tubing clamp and replace end cap.

3 Alternatively, to minimize the risk of exposure to hazardous medication, pinch the tubing at the pump inlet, remove the distal end cap, and use a syringe to prime the set with saline.



FILLING/PRIMING WITH DRUGS PRONE TO PRECIPITATION

Some drugs, fluorouracil (5-FU) for example, can precipitate causing medication crystallization within the pump tubing, filter or flow restrictor. Drug crystallization could result in an occlusion causing a partial or no-flow condition. To minimize the incidence of precipitation, follow the manufacturer's recommendation for storage and transportation.

NOTE: Cold temperature, high concentration, and time at rest/lack of agitation may cause Fluorouracil to precipitate. To minimize the likelihood of precipitation:

- Ensure pumps containing 5-FU are protected from cold temperatures during transport.
- Instruct patient not to refrigerate pumps with 5-FU or expose pumps to cold temperatures during infusion.
- Dilute the drug unless contraindicated
- Don't let the pre-filled pump sit too long.

STORAGE

The medication within the InfuLife System will determine the pump's storage requirements. Ensure that the InfuLife System is brought to room temperature before infusing.

Nominal fill volume	100 – 125 mls	270 – 300 mls	400 mls
Refrigerator to room temp	2-3 hours	3-4 hours	4-5 hours
Freezer to room temp	Do Not Freeze		

For additional fill volumes, see chart on pages 4 and 5.

InfuLife Systems can be started immediately after filling.

– InfuLife System can be pre-filled and stored prior to administration. When a filled pump is stored beyond 8 hours before usage, the pressure in the reservoir will decrease due to stretch of the elastomeric membranes. This may result in a reduction in flow rate below the nominal rate.

Microbial risks related to prolonged storage must be evaluated and validated by each pharmacy following guidelines from USP. Please refer to drug stability tables for appropriate duration and temperature of storage.

STARTING THE INFUSION

USE ASEPTIC TECHNIQUE

1. Allow the InfuLife System to reach room temperature before using.
2. Verify that the clamp on the tubing is closed.
3. Cleanse injection site of patient's access device.
4. Attach the InfuLife System tubing to the access device. Begin infusion by opening the clamp; fluid delivery will start immediately. If tubing is kinked, roll kinked portion of the tubing between fingers to restore shape of tubing and promote fluid flow.

- Catheter Size: When administering through a central or peripheral catheter, follow instructions provided by the catheter manufacturer.

- InfuLife controls the flow with the length of the microbore tubing between the filter and the end connector. This section of tubing is the **flow restrictor**.
- For rates below 2 mL/hr, tubing alone can't slow the flow enough — an additional glass restrictor is added at the distal end connector.

- **Secure 2-3 inches of restrictor tubing to the patient's skin (see picture).**
- When applicable, if the surgical site allows, secure the glass restrictor to the skin as well.
- Tubing-only securement still meets device specifications — the glass restrictor is best practice, not a requirement.
- Patient should wear the pump tubing inside his/her clothing.

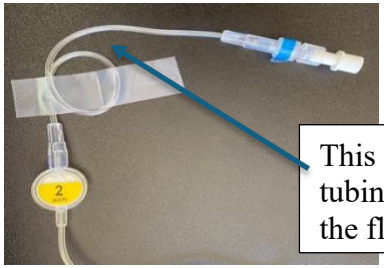

DURING THE INFUSION

- Healthcare provider must educate patients on proper use of InfuLife.
- Do not use while bathing or swimming. Patient may shower if InfuLife and access site are protected from water.
- Do not microwave or submerge in water.
- Patients should keep InfuLife at the same level as their access site.
- During use, InfuLife may be placed in a carrying pouch, patient's pocket, or on a table/bed next to the patient. Carrying pouches are available to purchase from InfuLife distributors.
- When InfuLife is full, the pump is expanded into a spheric balloon shape, and the core cannot be touched.



END OF INFUSION

As the infusion proceeds, the balloon deflates, and its volume is reduced. At the end of infusion, the core is aligned with the black line in the middle of the balloon, and the core can be felt.

When the infusion is complete, close clamp, disconnect and dispose of the InfuLife System per your institution's protocol.



⚠ CAUTIONS

- The InfuLife System is single use only. Do not reuse, re-sterilize or refill.
- The InfuLife System is sterile and nonpyrogenic. Do not use if sterile pouch has been opened, damaged, or if either protector cap is not in place.
- Do not exceed the maximum labeled fill volume of the pump.
- The InfuLife System is not intended for the delivery of blood, blood products, lipids, fat emulsions or TPN.

FREQUENTLY ASKED QUESTIONS

Are there any medications that cannot be given in the InfuLife System?	InfuLife® is contraindicated for blood and blood products, TPN, lipids or fat emulsions, insulin, critical or life-supporting medications, intra-articular infusion of local anesthetics, and any solution not compatible with the fluid-path materials. See the IFU (PMP-1100) for the full list and consult the drug package insert.
What is the filter size?	The InfuLife products include an in-line 1.2-micron particulate air eliminating filter.
Is there any way to remove an air bubble from inside the InfuLife device?	It is not uncommon to have a small air bubble in the InfuLife device after filling. Small amounts of air diffuse through the silicone membrane and are vented by the in-line air-eliminating filter.
What is the material in the elastomeric membranes?	The drug reservoir is a medical-grade silicone elastomer, protected by a latex-free PVC outer cover. The InfuLife® fluid path has passed ISO 10993 biological safety testing (cytotoxicity, sensitization, irritation, systemic toxicity, pyrogenicity and hemolysis).
Can the InfuLife System be used on patients with latex sensitivity?	Yes. All the components of InfuLife have been manufactured with materials containing no latex, and without use of DEHP.
Can a patient have an MRI while connected to InfuLife	Yes. The InfuLife System does not contain any metallic or electronic parts. InfuLife products, are deemed MR safe.

TROUBLESHOOTING ISSUE RESOLUTION

The infusion is running too slowly	• Ensure that the InfuLife System and the drug within have reached room temperature after refrigerator storage. Allow the warm-up time shown in the Storage table on page 7. • Verify that the fill volume is within the parameters for the device that is being used. InfuLife loses accuracy if filled beyond the limits specified in pages 4-5. • Remember that the drug's viscosity can affect the flow rate when using InfuLife. InfuLife is calibrated using normal saline, so any drug or diluent more viscous than normal saline can cause a slower than expected flow rate. Consult the IFU PMP-1100 for additional information on the impact of head height and temperature.
The pump is not infusing at all	• Ensure the clamp on the InfuLife System tubing is open. Also ensure any clamp on the patient's catheter is open. • Check for kinks in the InfuLife System tubing. Massage any kinks out of the tubing with your fingers. • Check to make sure the filter is not covered.
The infusion is running too fast.	• InfuLife is designed to operate at skin temperature (31°C/88°F), at zero head height. If the pump is placed at a higher level than the outlet, or is heated under a blanket for example, it may flow faster than its labeled rate. Consult the IFU PMP-1100 for additional information on the impact of head height and temperature. • Verify that the fill volume is within the parameters for the device that is being used.

There are inherent risks in all medical devices. Please refer to the product labeling for **Indications**, **Cautions**, **Warnings** and **Contraindications**. Failure to follow the product labeling could directly impact patient safety. Physician is responsible for prescribing and administering medications per instructions provided by the drug manufacturer.
For more information, contact your provider, or visit http://www.infulife.com/

Rx only. © First Medical Source, 2026. HQ Laguna Niguel CA 92677. Manufactured in Chonburi, Thailand, 20230.

PMP-1101 Rev C