Telescopic Fume Arm

FA-044884-T

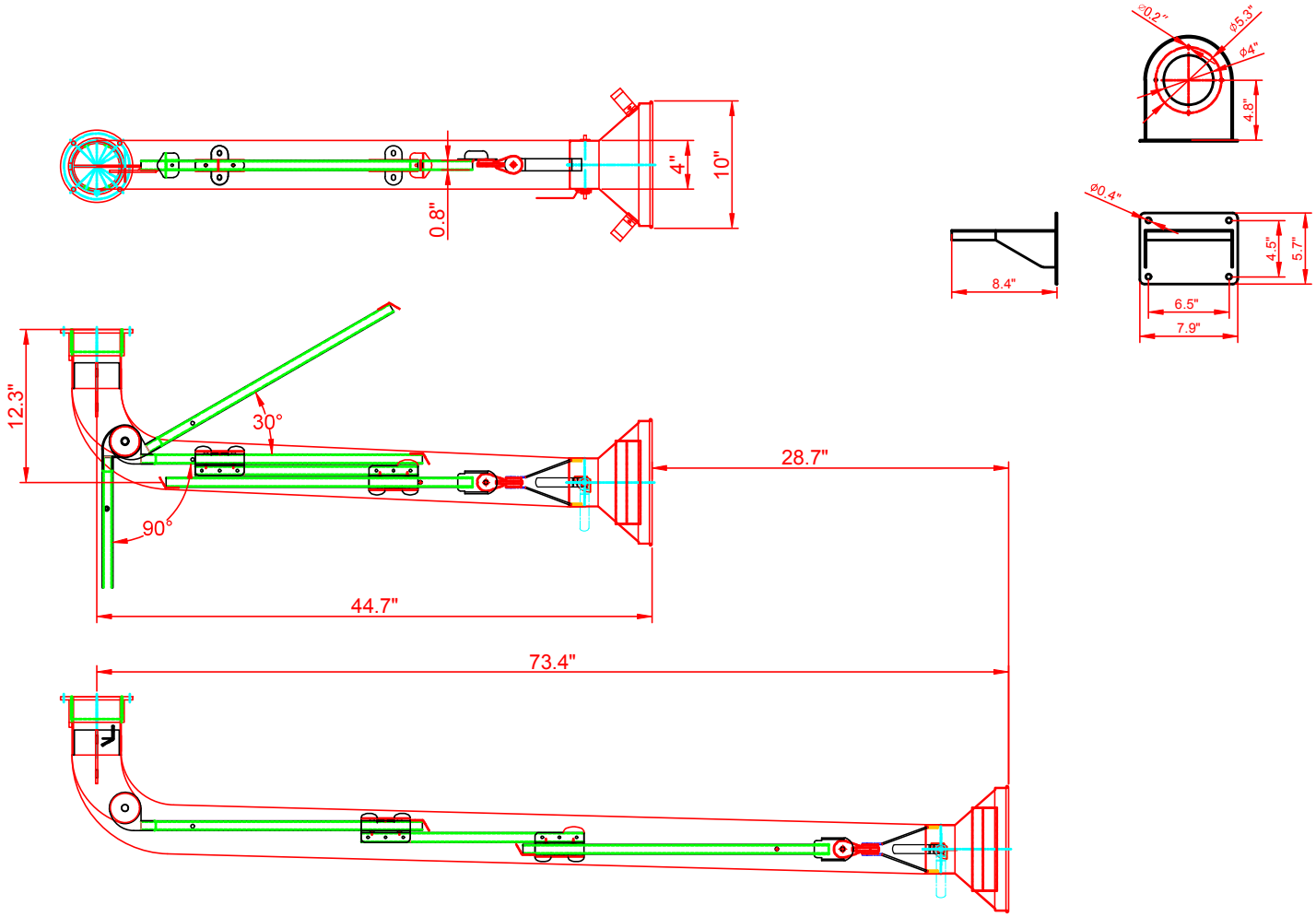

Tube Diameter: 4"

Arm Length: 4'-7'

Hood Diameter: 10"

Ductwork Connection: 4"

Mounting Configuration: Hanging

Arm Construction: 3-Stage adjustable Steel frame, flexible hose on telescopic frame, hose rated at 195°F (intermittent 260°F)

Damper: Internal with external adjustment.

Mounting bracket: 4"

Accessories: Spark protector

AIR PRODUCTS
www.IAP-AirProducts.com

580 Technology Drive,
Sparta, TN 38583
Sales@IAP-AirProducts.com

SCALE	1:20	DRAWN	JW	DWG NO.	REV
		CHECKED	DM	FA-044884-T	
PROJECTION		DATE	2022.06.01		A