D6 0.03 - 0.3%

6m³/h - 0.03 -0.3%
26 GPM - 1:3000 - 1:300
0.3 - 8 bar
4.3 - 116 PSI

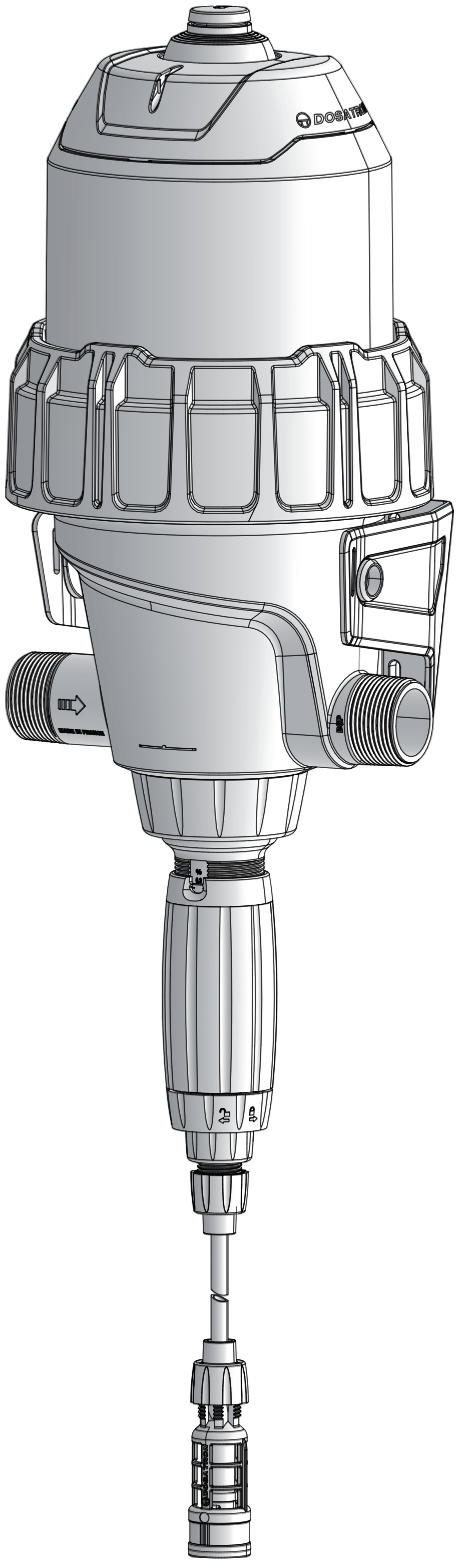

© DOSATRON INTERNATIONAL S.A.S. 2024
D6 0.03 - 0.3%/0824/D1

D6 0.03 - 0.3%

6m³/h - 0.03 -0.3%
26 GPM - 1:3000 - 1:300
0.3 - 8 bar
4.3 - 116 PSI

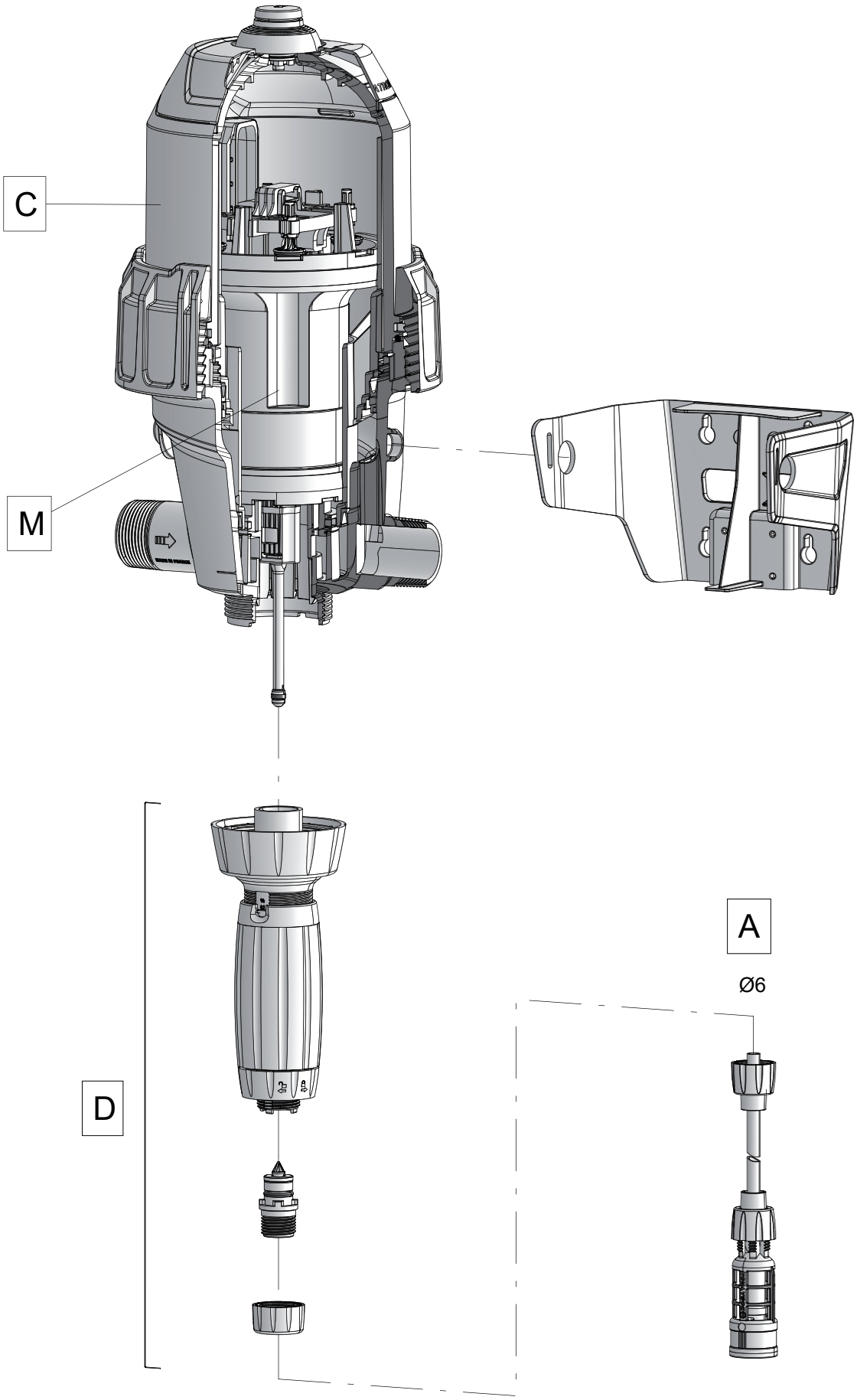

© DOSATRON INTERNATIONAL S.A.S. 2024
D6 0.03 - 0.3%/0824/D2

D6 0.03 - 0.3%

6m³/h - 0.03 -0.3%
26 GPM - 1:3000 - 1:300
0.3 - 8 bar
4.3 - 116 PSI

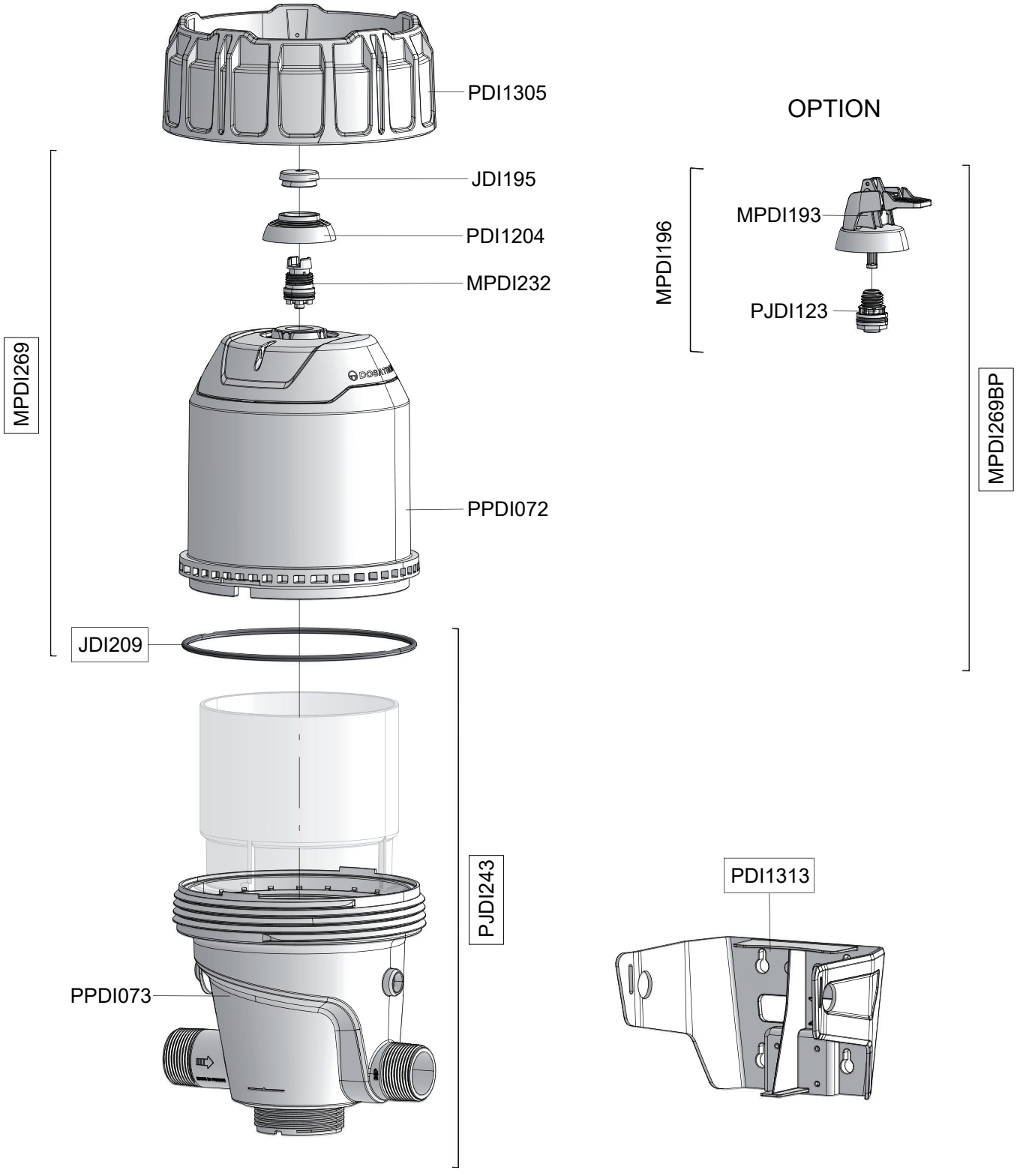

© DOSATRON INTERNATIONAL S.A.S. 2024
D6 0.03 - 0.3%/0824/D3

C

D6 0.03 - 0.3%

6m³/h - 0.03 -0.3%
26 GPM - 1:3000 - 1:300
0.3 - 8 bar
4.3 - 116 PSI

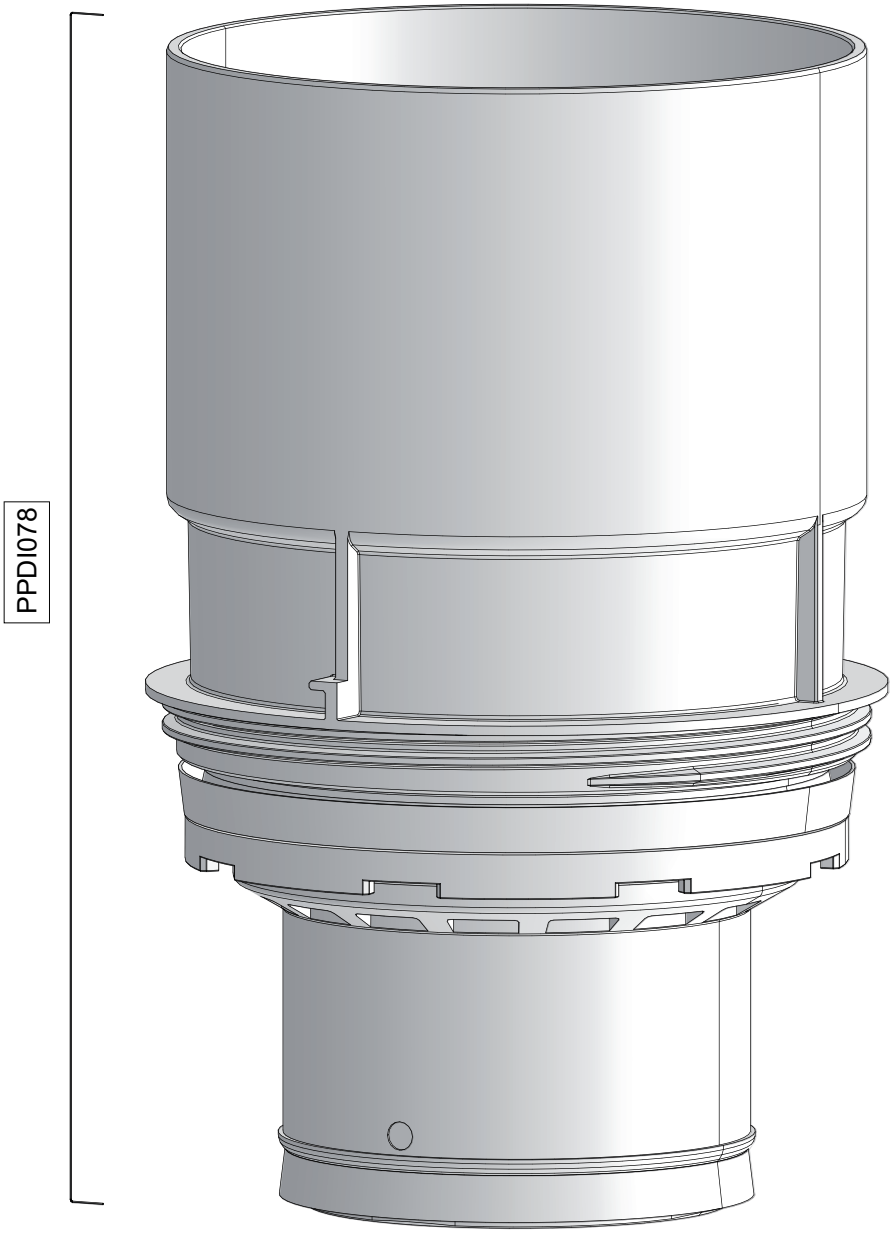

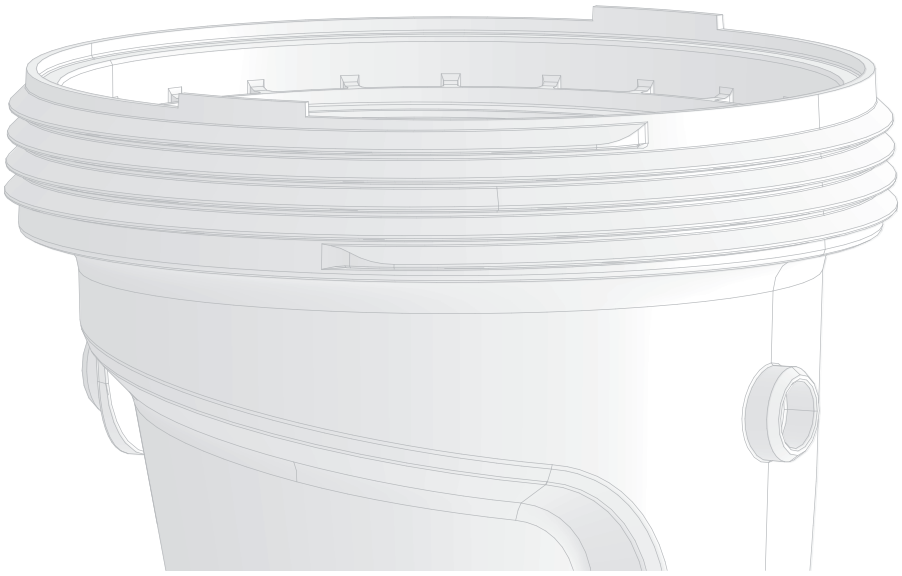

© DOSATRON INTERNATIONAL S.A.S. 2024
D6 0.03 - 0.3%/0824/D4

C

D6 0.03 - 0.3%

6m³/h - 0.03 -0.3%
26 GPM - 1:3000 - 1:300
0.3 - 8 bar
4.3 - 116 PSI

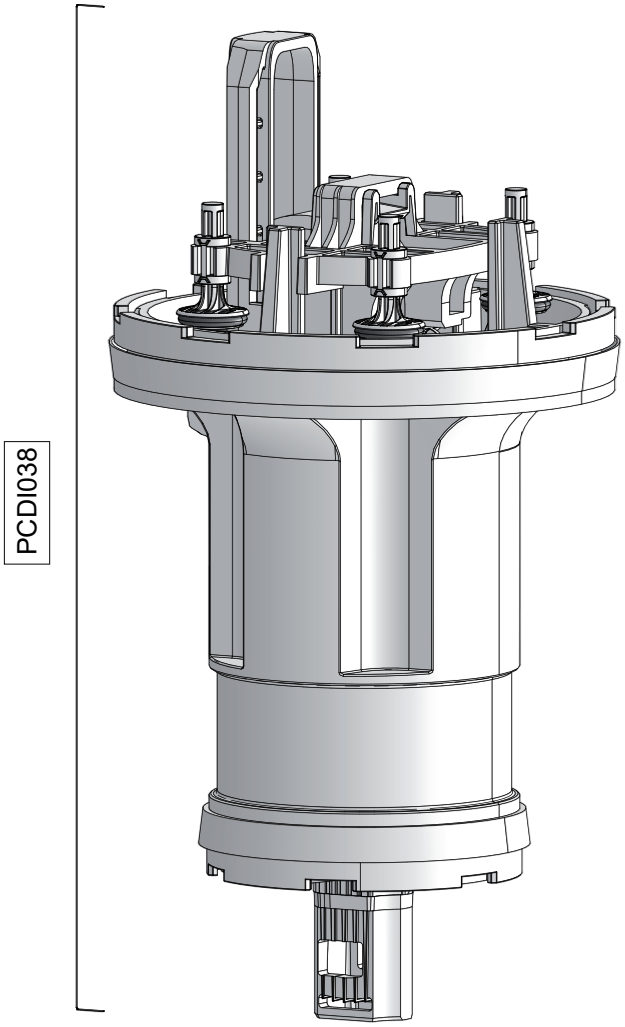

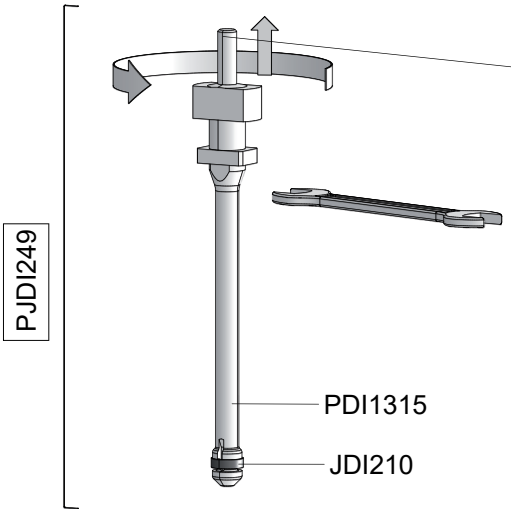

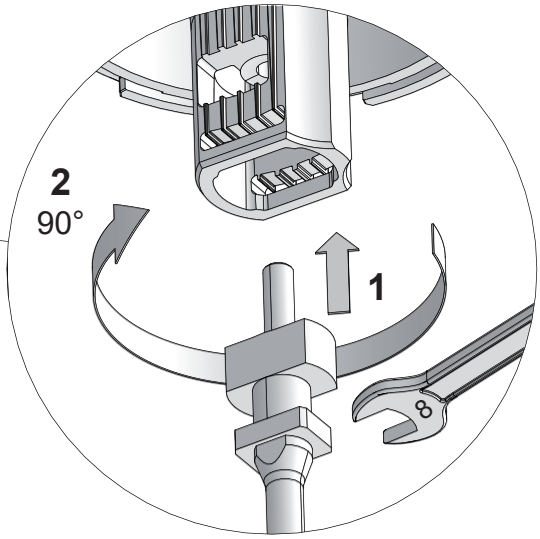

© DOSATRON INTERNATIONAL S.A.S. 2024
D6 0.03 - 0.3%/0824/D5

M

D6 0.03 - 0.3%

6m³/h - 0.03 -0.3%
26 GPM - 1:3000 - 1:300
0.3 - 8 bar
4.3 - 116 PSI

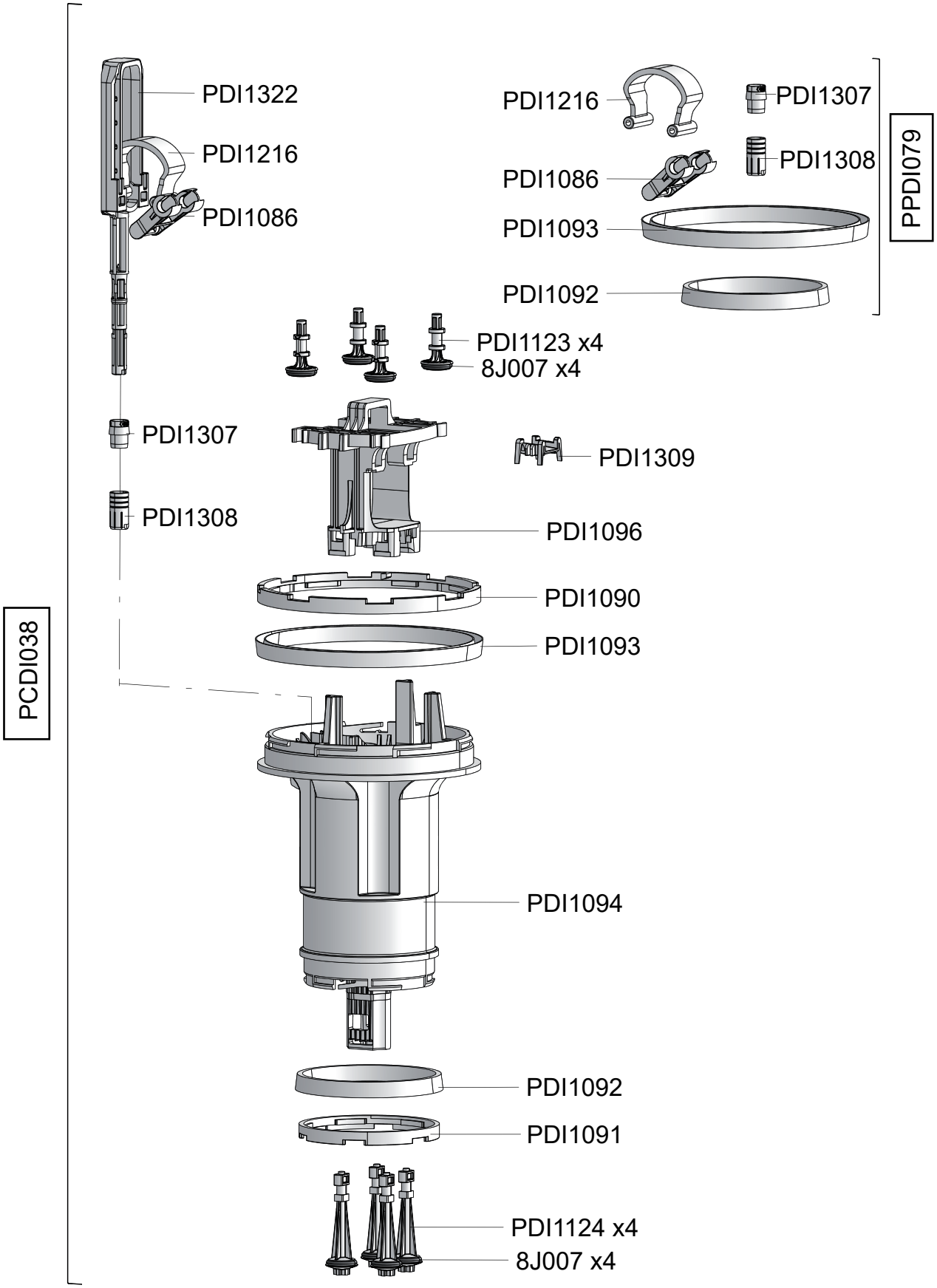

© DOSATRON INTERNATIONAL S.A.S. 2024
D6 0.03 - 0.3%/0824/D6

M

D6 0.03 - 0.3%

6m³/h - 0.03 -0.3%
26 GPM - 1:3000 - 1:300
0.3 - 8 bar
4.3 - 116 PSI

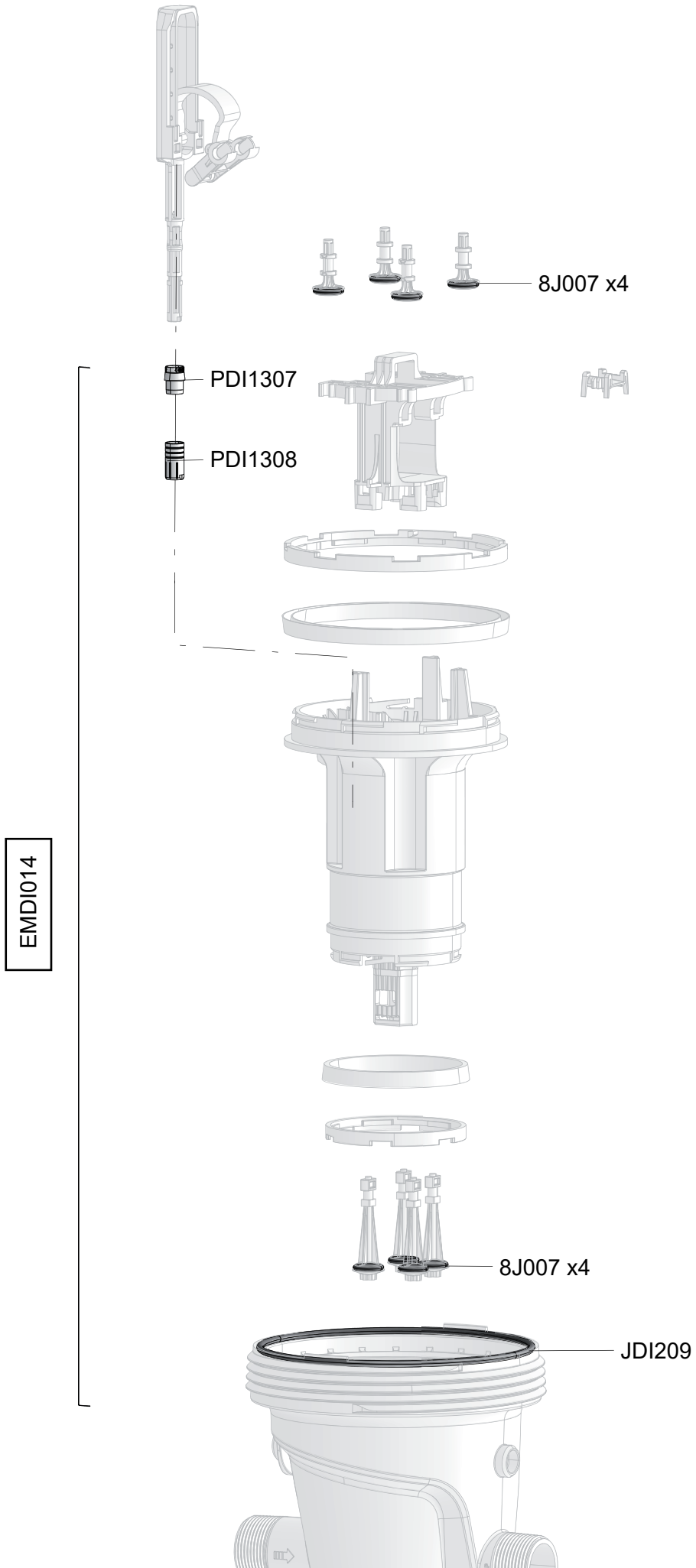

M

© DOSATRON INTERNATIONAL S.A.S. 2024
D6 0.03 - 0.3%/0824/D7

D6 0.03 - 0.3%

6m³/h - 0.03 -0.3%
26 GPM - 1:3000 - 1:300
0.3 - 8 bar
4.3 - 116 PSI

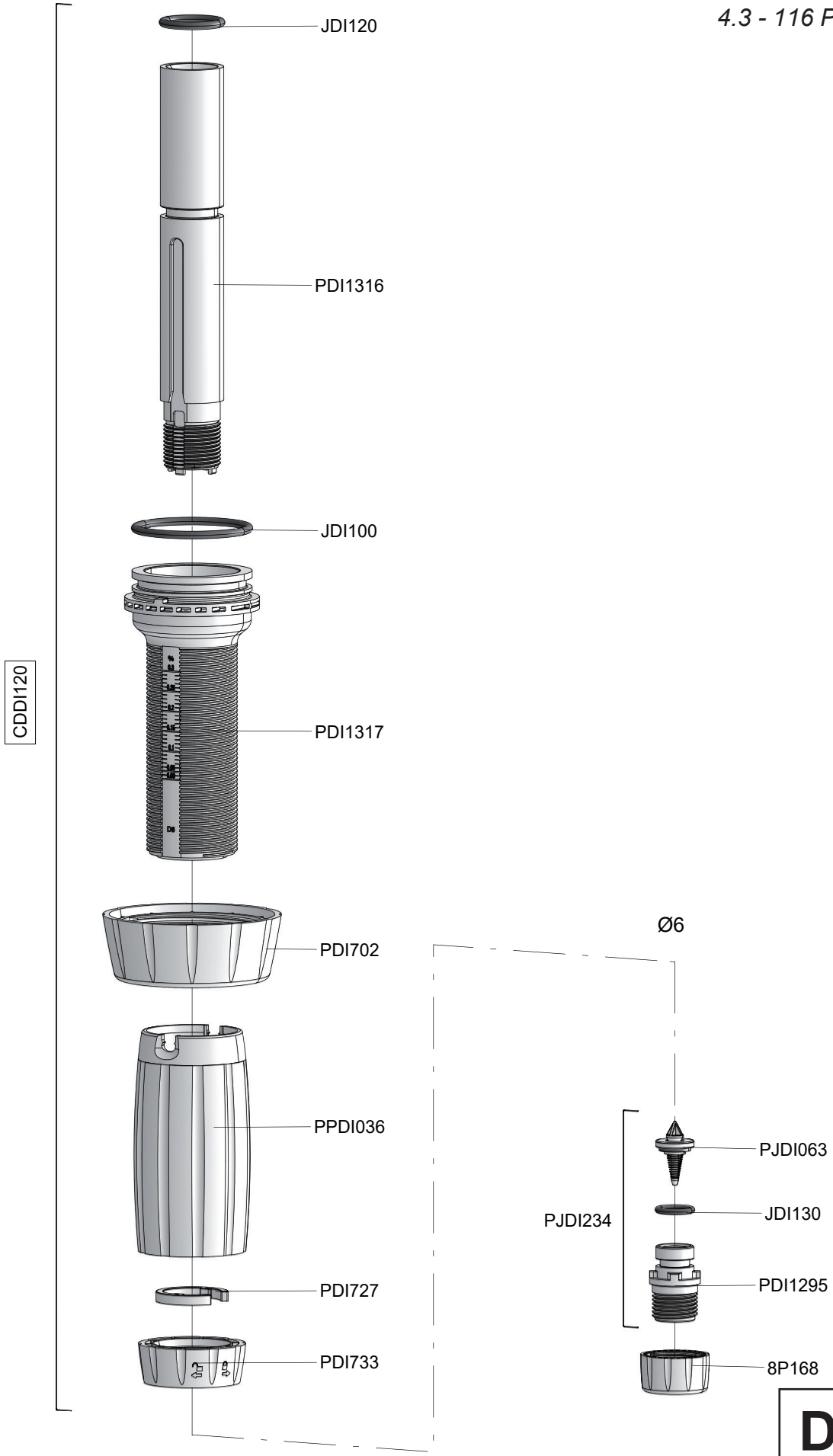

© DOSATRON INTERNATIONAL S.A.S. 2024
D6 0.03 - 0.3%/0824/D8

D

D6 0.03 - 0.3%

6m³/h - 0.03 -0.3%
26 GPM - 1:3000 - 1:300
0.3 - 8 bar
4.3 - 116 PSI

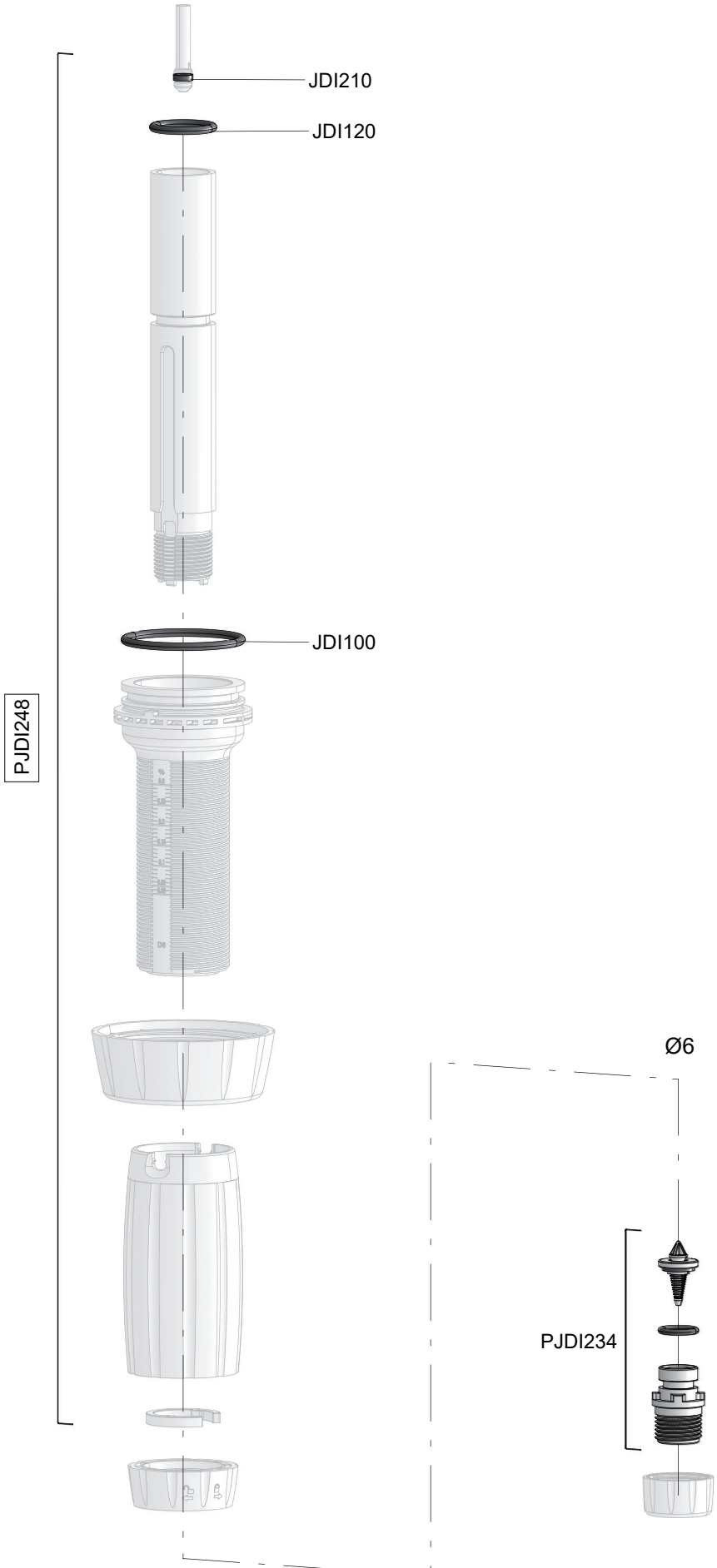

© DOSATRON INTERNATIONAL S.A.S. 2024
D6 0.03 - 0.3%/0824/D9

D

D6 0.03 - 0.3%

6m³/h - 0.03 -0.3%
26 GPM - 1:3000 - 1:300
0.3 - 8 bar
4.3 - 116 PSI

(Ø6)

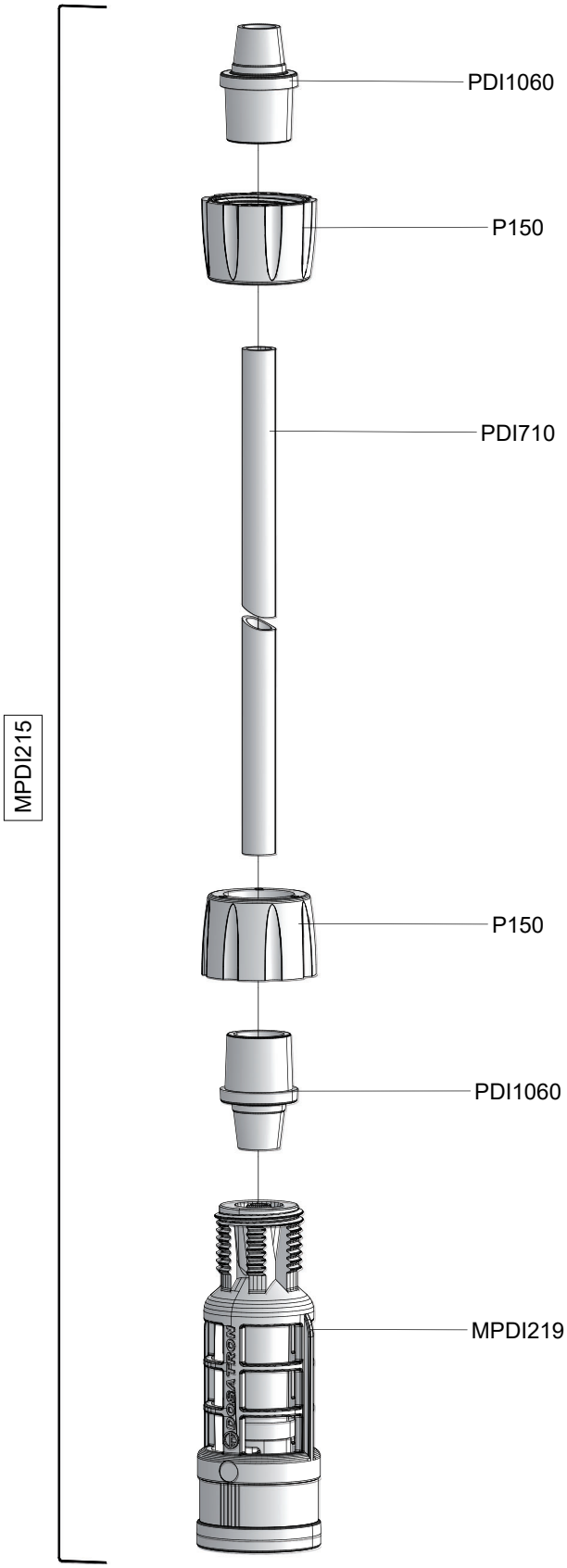

© DOSATRON INTERNATIONAL S.A.S. 2024
D6 0.03 - 0.3%/0824/D10

A