D6 0.2 - 2%

6m³/h - 0.2 - 2%
26 GPM - 1:500 - 1:50
0.3 - 8 bar
4.3 - 116 PSI

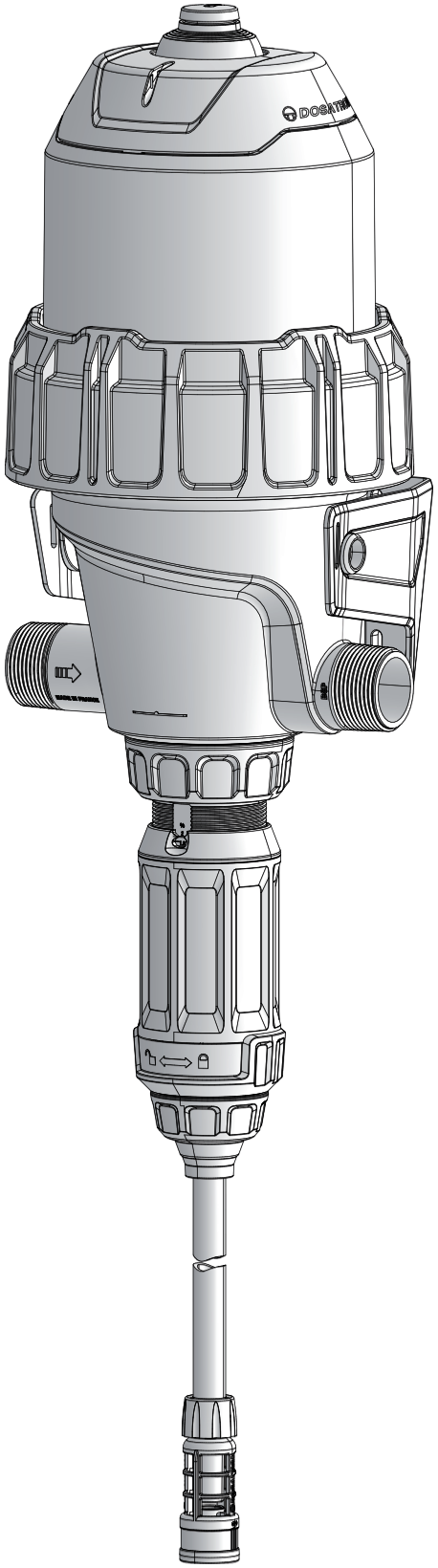

© DOSATRON INTERNATIONAL S.A.S. 2024
D6 0.2 - 2%/0824/D1

D6 0.2 - 2%

6m³/h - 0.2 - 2%
26 GPM - 1:500 - 1:50
0.3 - 8 bar
4.3 - 116 PSI

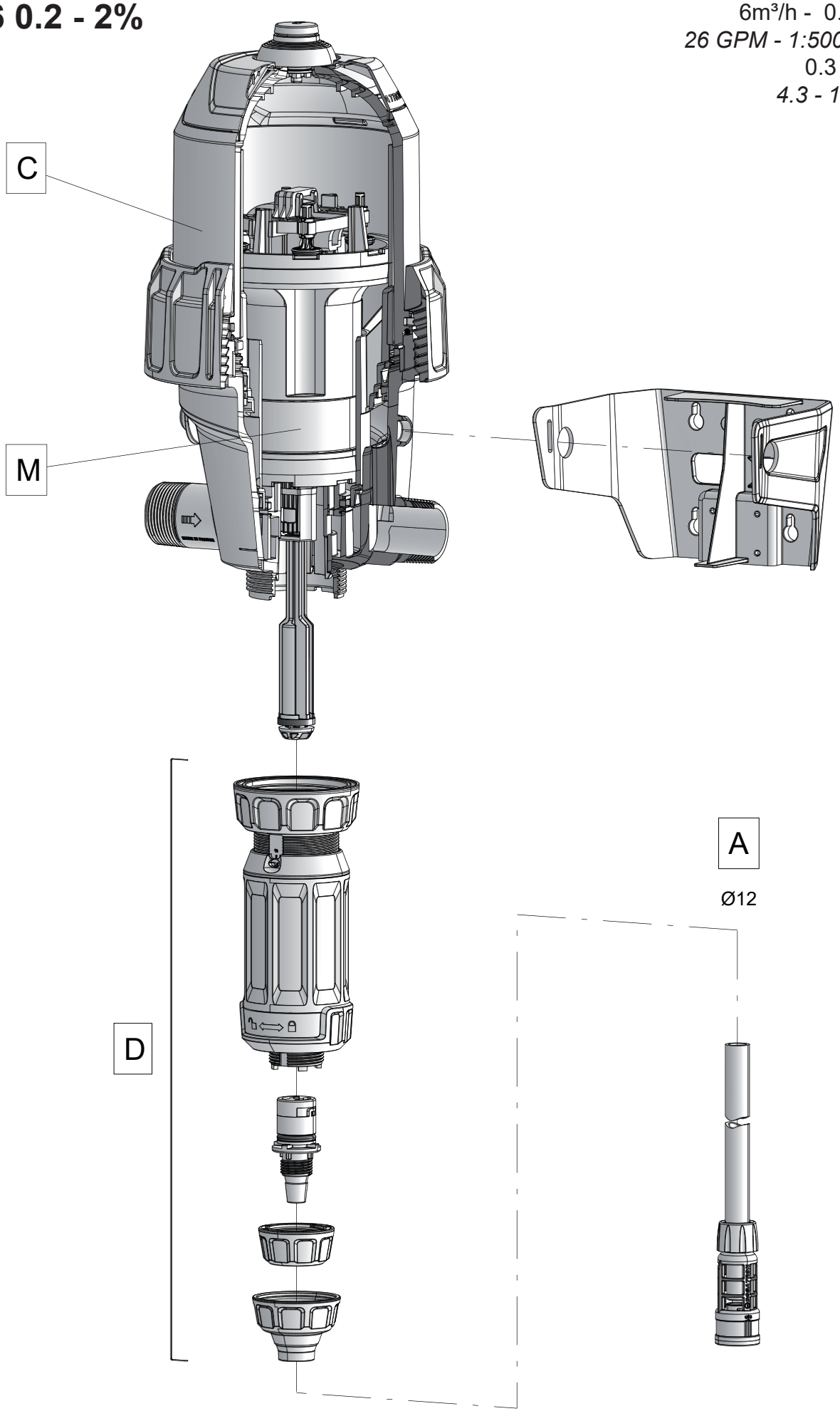

© DOSATRON INTERNATIONAL S.A.S. 2024
D6 0.2 - 2%/0824/D2

D6 0.2 - 2%

6m³/h - 0.2 - 2%
26 GPM - 1:500 - 1:50
0.3 - 8 bar
4.3 - 116 PSI

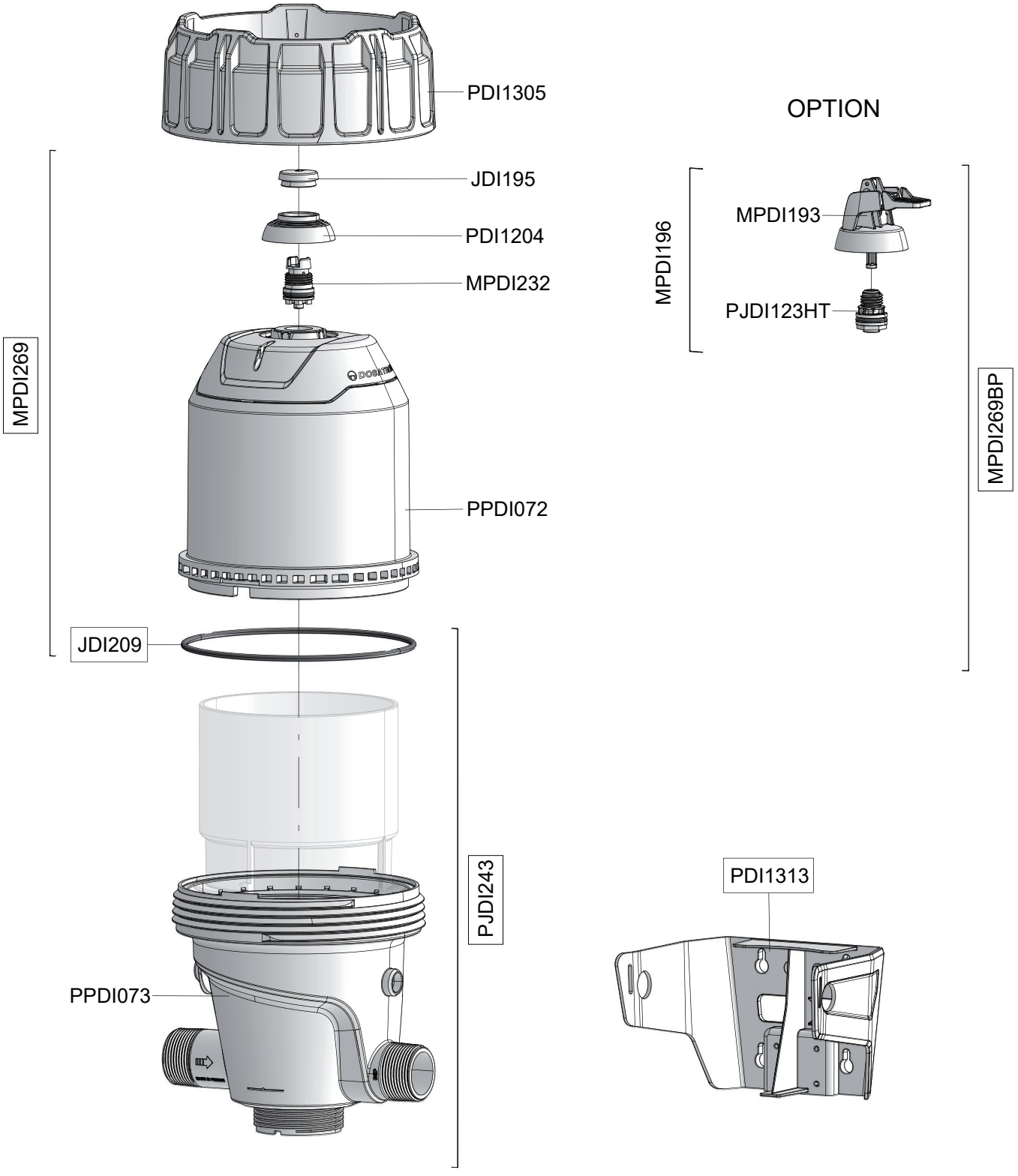

© DOSATRON INTERNATIONAL S.A.S. 2024
D6 0.2 - 2%/0824/D3

C

D6 0.2 - 2%

6m³/h - 0.2 - 2%
26 GPM - 1:500 - 1:50
0.3 - 8 bar
4.3 - 116 PSI

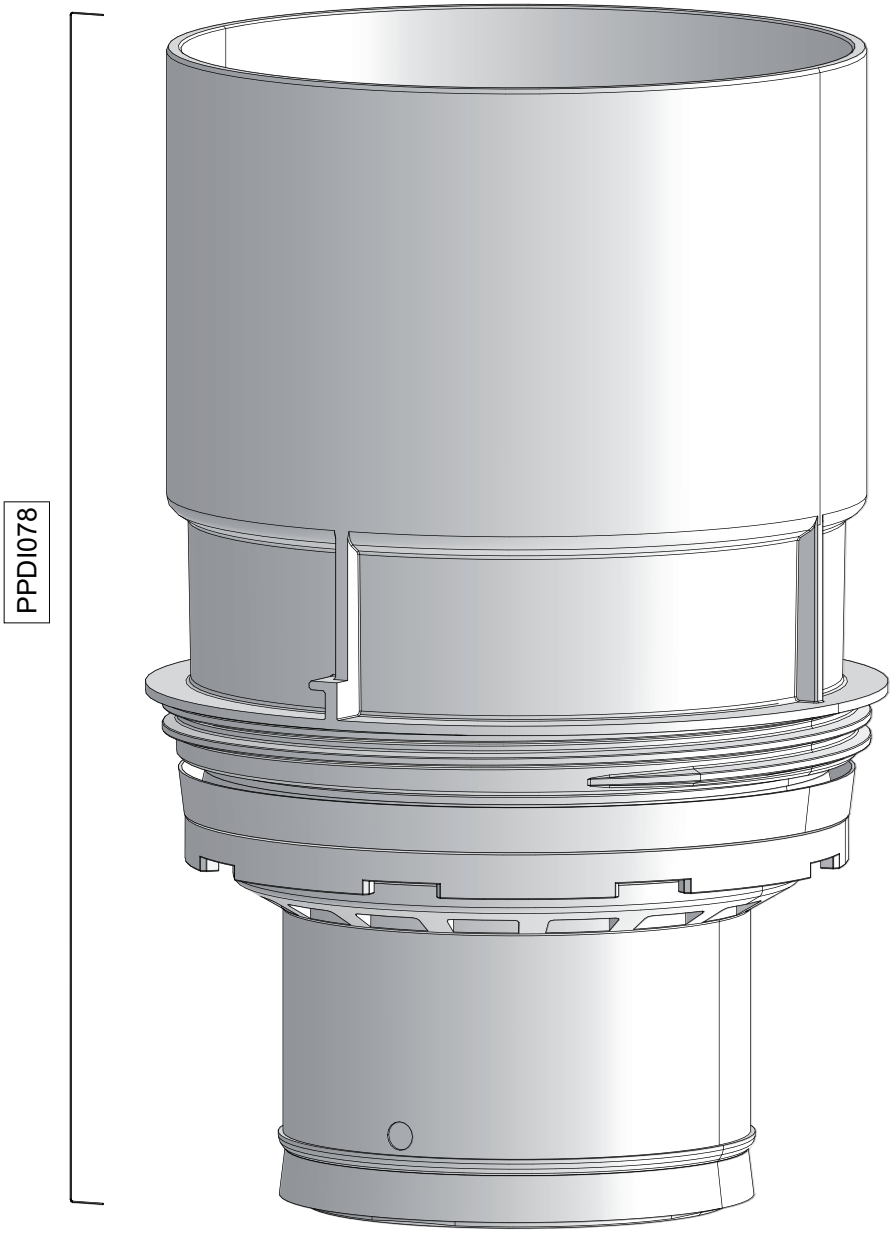

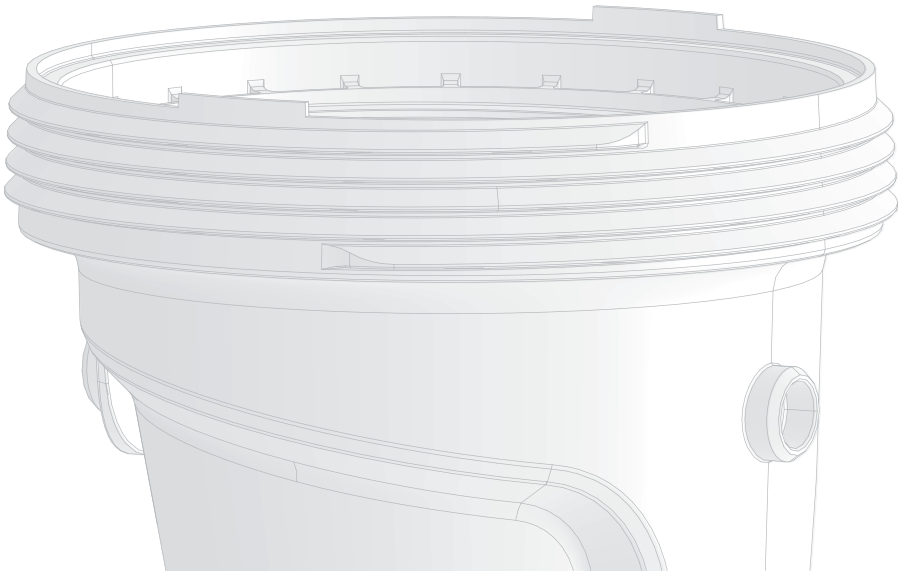

© DOSATRON INTERNATIONAL S.A.S. 2024
D6 0.2 - 2%/0824/D4

C

D6 0.2 - 2%

6m³/h - 0.2 - 2%
26 GPM - 1:500 - 1:50
0.3 - 8 bar
4.3 - 116 PSI

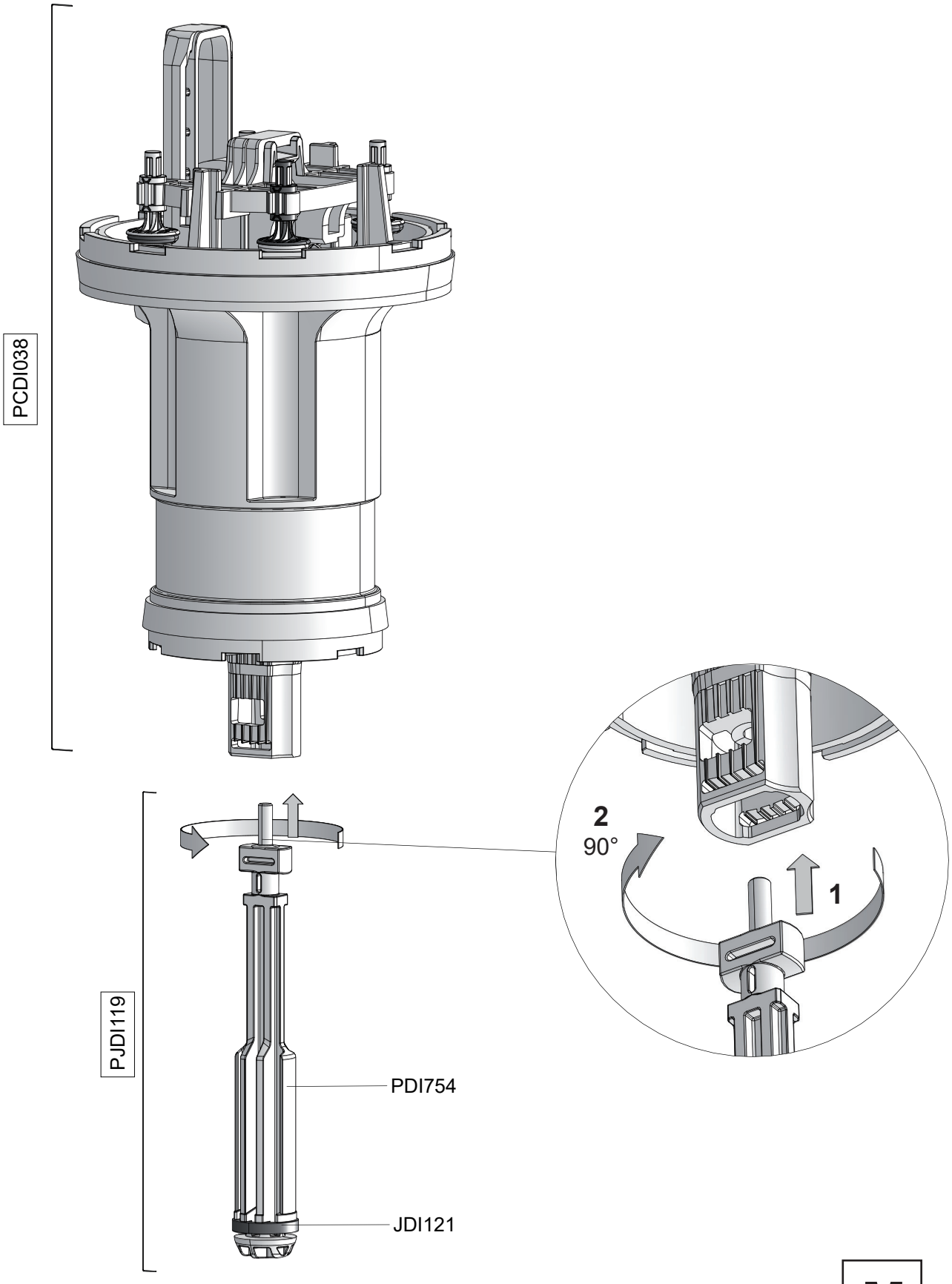

© DOSATRON INTERNATIONAL S.A.S. 2024
D6 0.2 - 2%/0824/D5

M

D6 0.2 - 2%

6m³/h - 0.2 - 2%
26 GPM - 1:500 - 1:50
0.3 - 8 bar
4.3 - 116 PSI

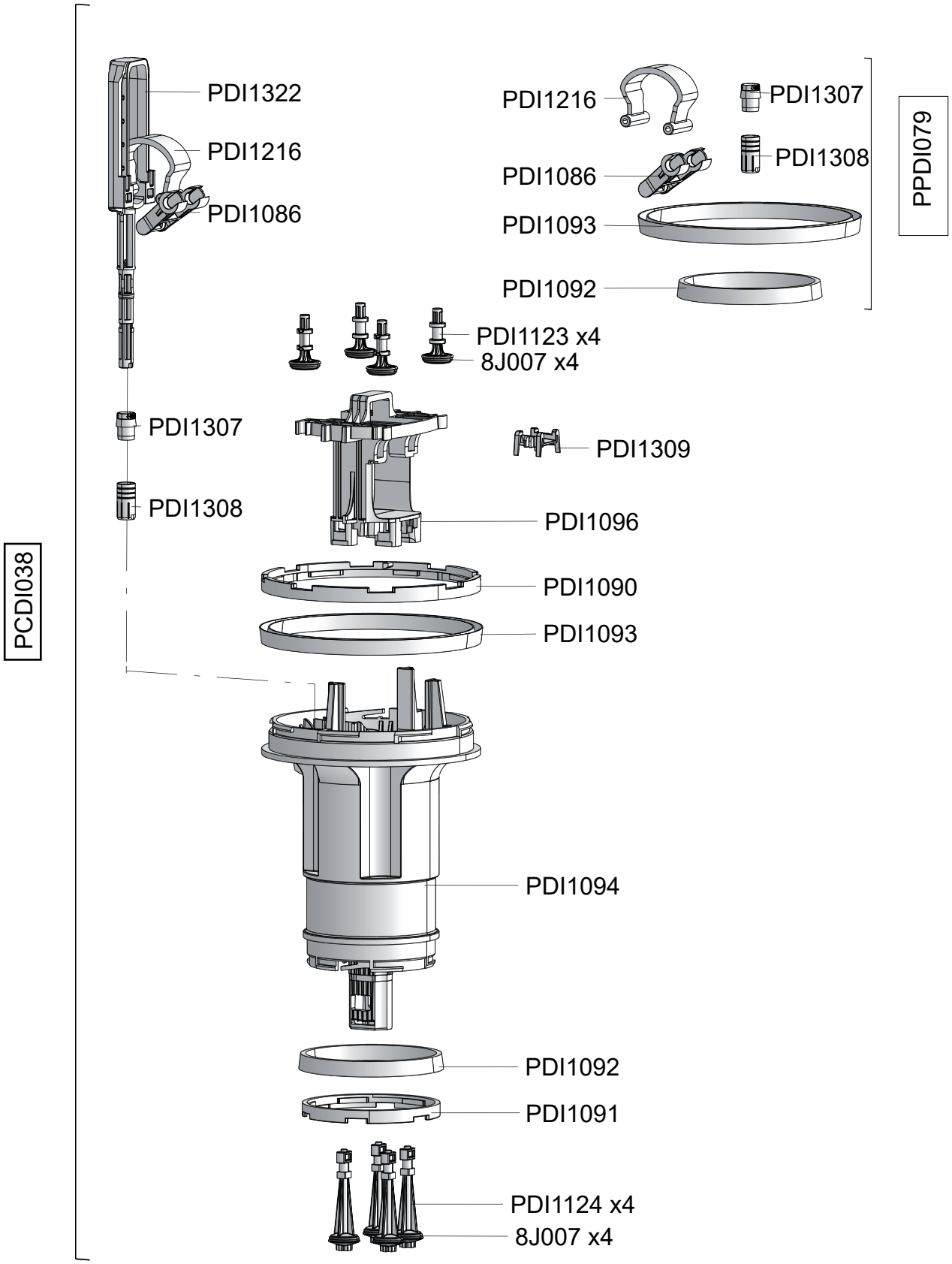

© DOSATRON INTERNATIONAL S.A.S. 2024
D6 0.2 - 2%/0426/D6

M

D6 0.2 - 2%

6m³/h - 0.2 - 2%
26 GPM - 1:500 - 1:50
0.3 - 8 bar
4.3 - 116 PSI

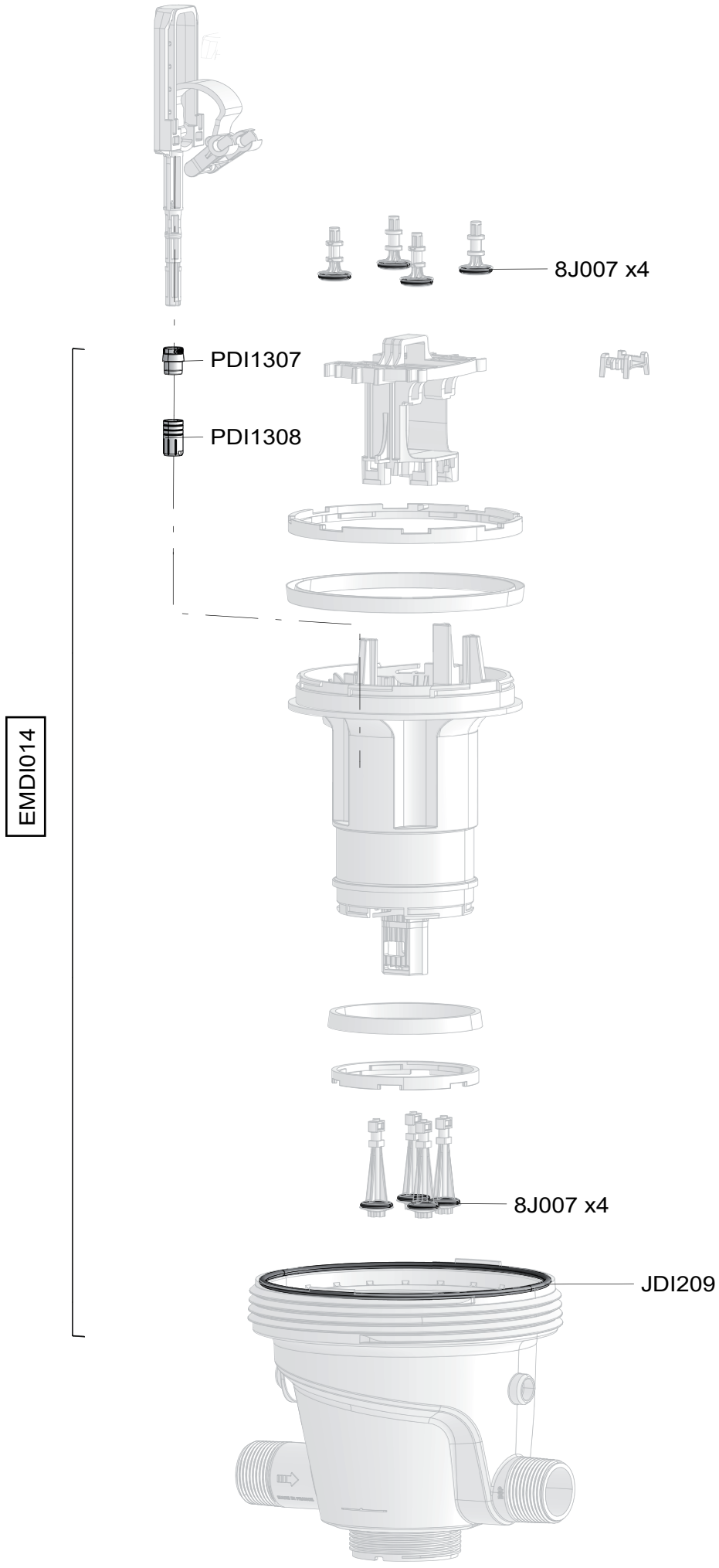

© DOSATRON INTERNATIONAL S.A.S. 2024
D6 0.2 - 2%/0426/D7

M

D6 0.2 - 2%

6m³/h - 0.2 - 2%
26 GPM - 1:500 - 1:50
0.3 - 8 bar
4.3 - 116 PSI

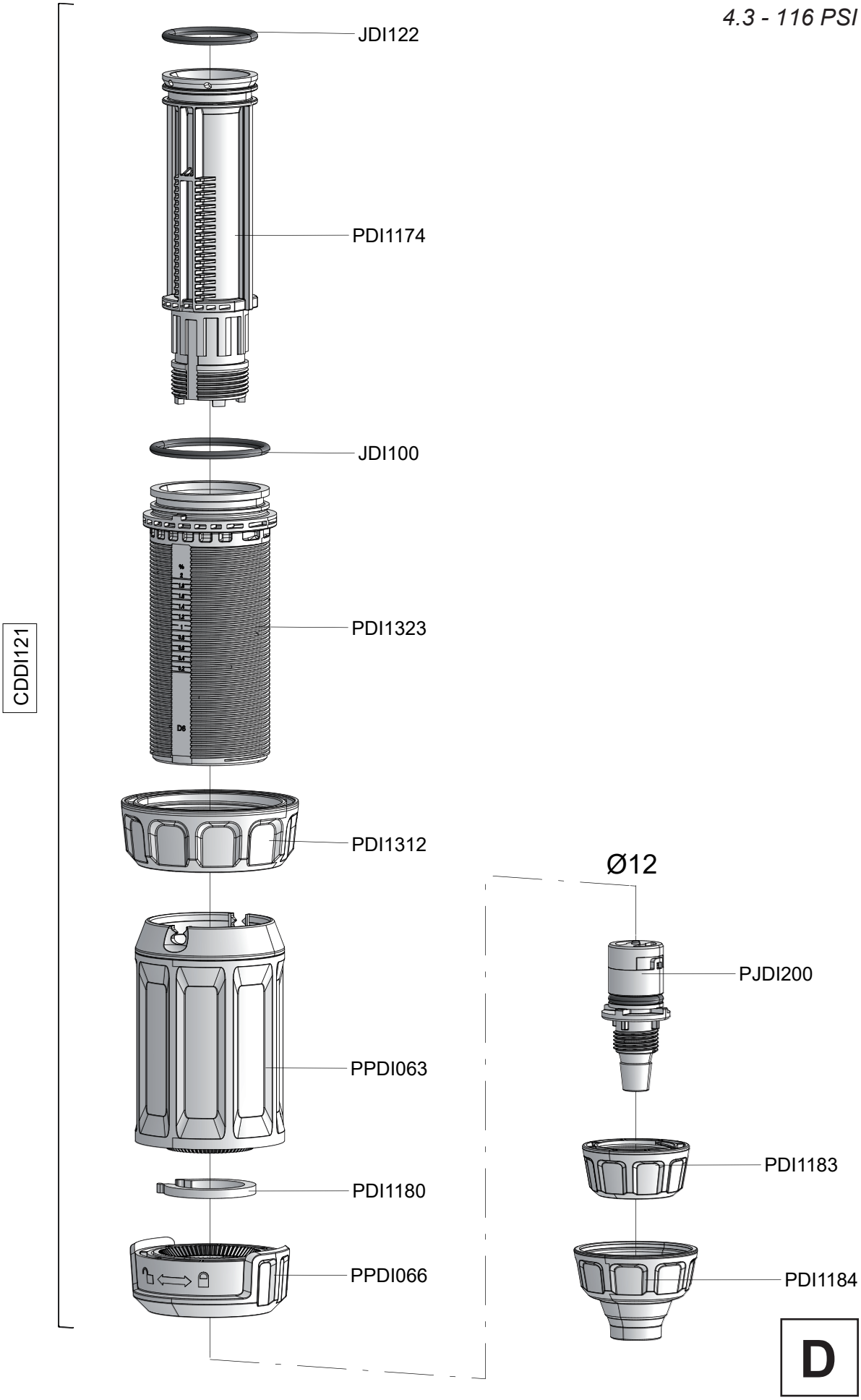

D

© DOSATRON INTERNATIONAL S.A.S. 2024
D6 0.2 - 2%/0824/D8

D6 0.2 - 2%

6m³/h - 0.2 - 2%
26 GPM - 1:500 - 1:50
0.3 - 8 bar
4.3 - 116 PSI

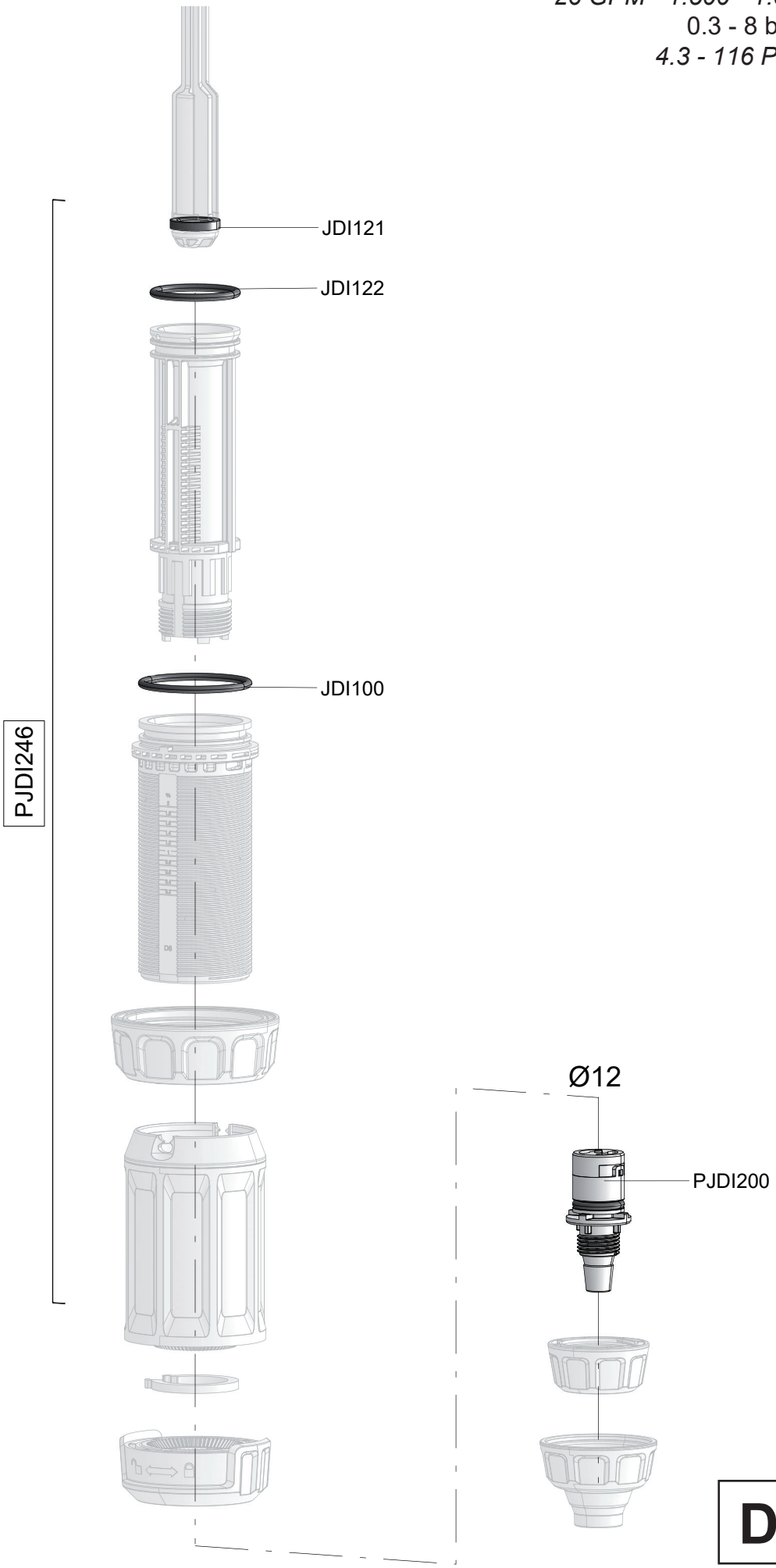

© DOSATRON INTERNATIONAL S.A.S. 2024
D6 0.2 - 2%/0824/D9

D

D6 0.2 - 2%

6m³/h - 0.2 - 2%
26 GPM - 1:500 - 1:50
0.3 - 8 bar
4.3 - 116 PSI

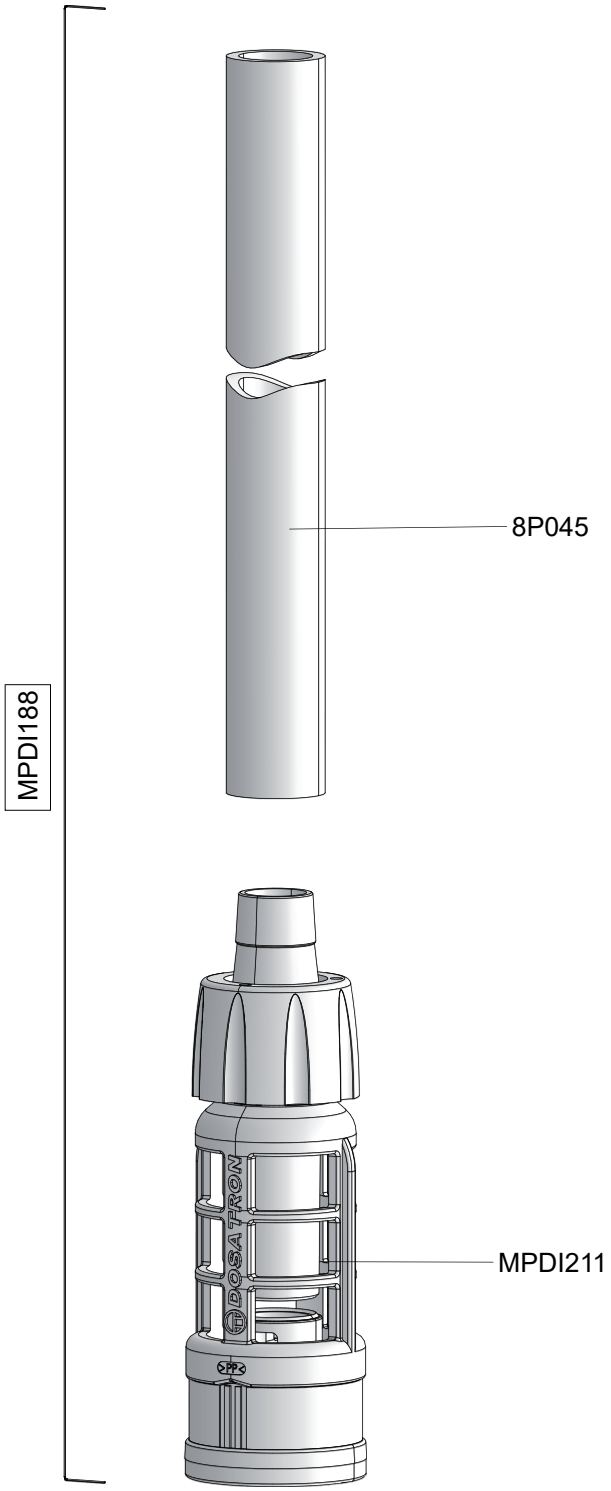

© DOSATRON INTERNATIONAL S.A.S. 2024
D6 0.2 - 2%/0824/D10

A