D3RE2

3 m^3/h - 0.2 - 2%
14 GPM - 1:500 - 1:50
0.3 - 6 bar
4.3 - 85 psi

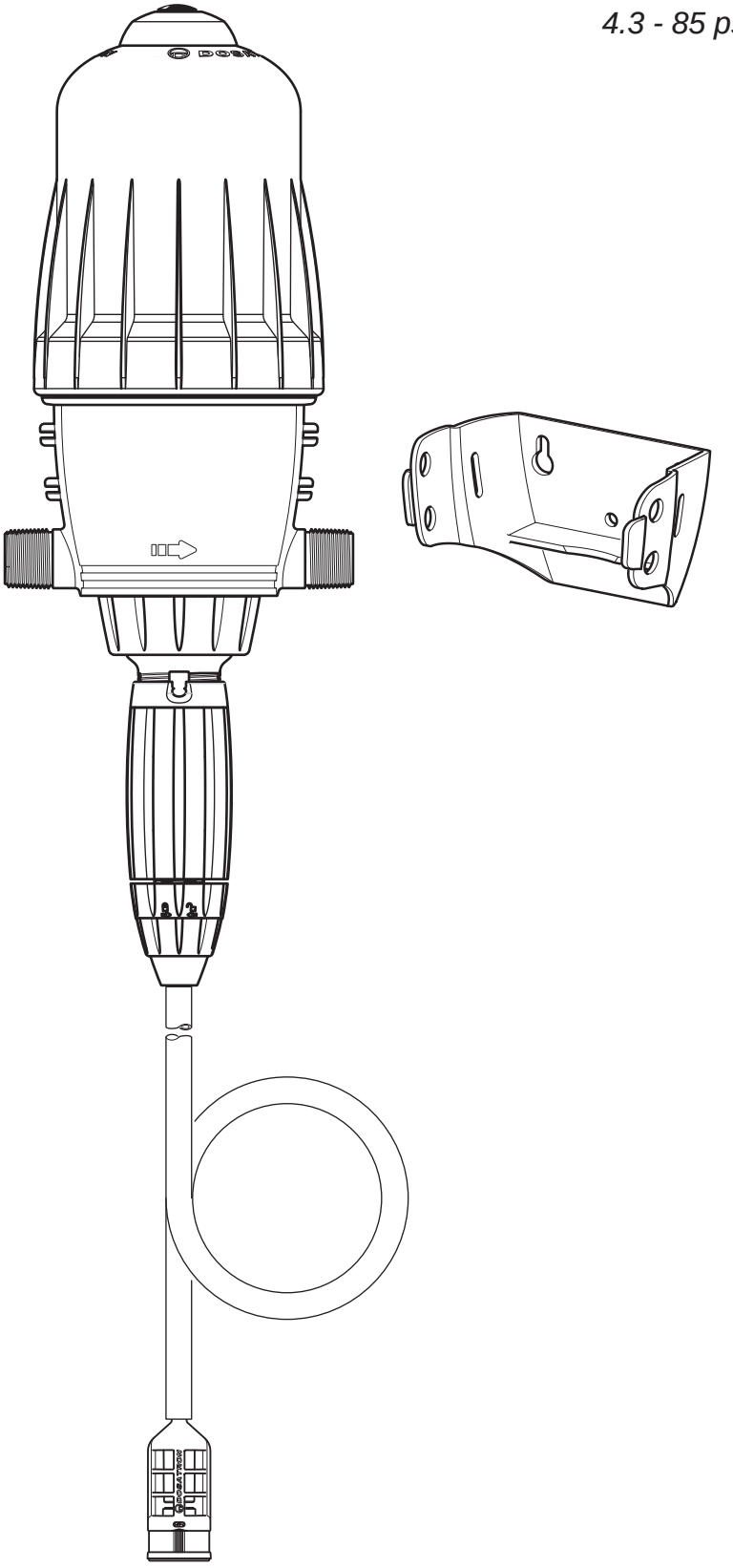

© DOSATRON INTERNATIONAL S.A.S. 2014
D3RE2/1014/D1

D3RE2

3 m^3/h - 0.2 - 2%
14 GPM - 1:500 - 1:50
0.3 - 6 bar
4.3 - 85 psi

C+M

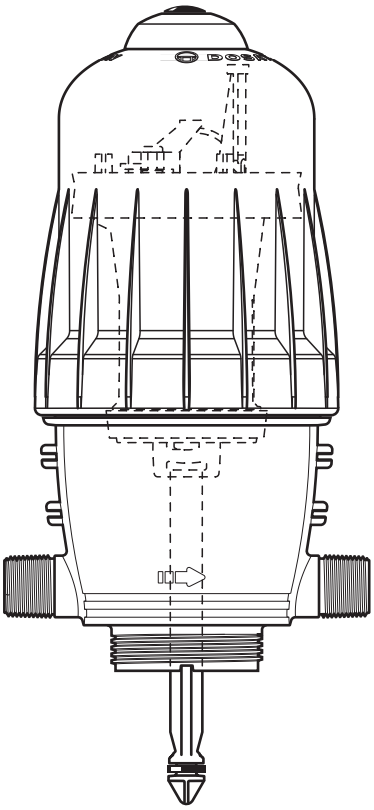

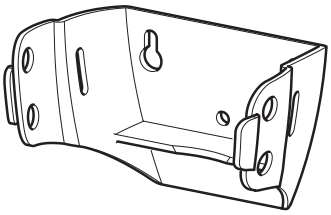

A

Option "V"

D

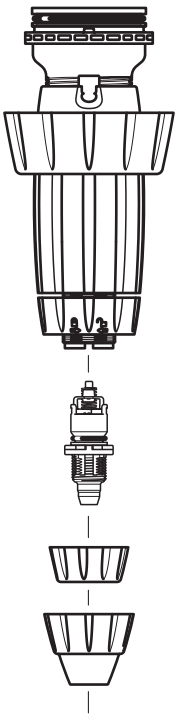

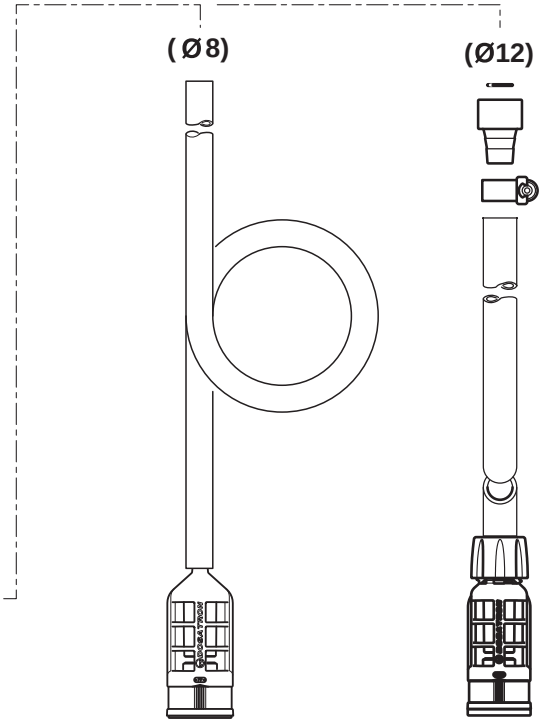

© DOSATRON INTERNATIONAL S.A.S. 2014
D3RE2/1014/D2

D3RE2

3 m³/h - 0.2 - 2%
14 GPM - 1:500 - 1:50
0.3 - 6 bar
4.3 - 85 psi

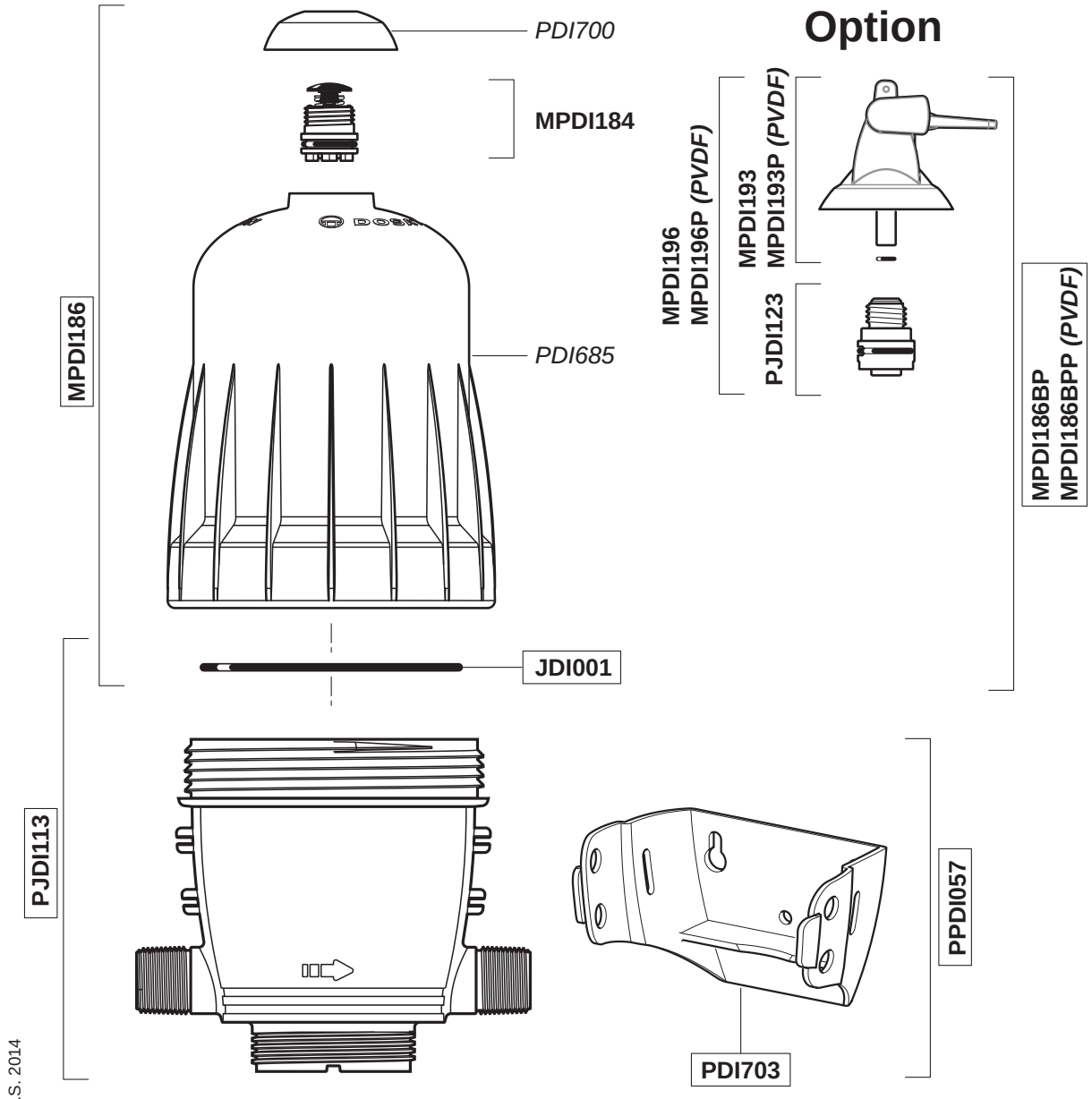

© DOSATRON INTERNATIONAL S.A.S. 2014
D3RE2/1014/D3

C+M

D3RE2

3 m³/h - 0.2 - 2%
14 GPM - 1:500 - 1:50
0.3 - 6 bar
4.3 - 85 psi

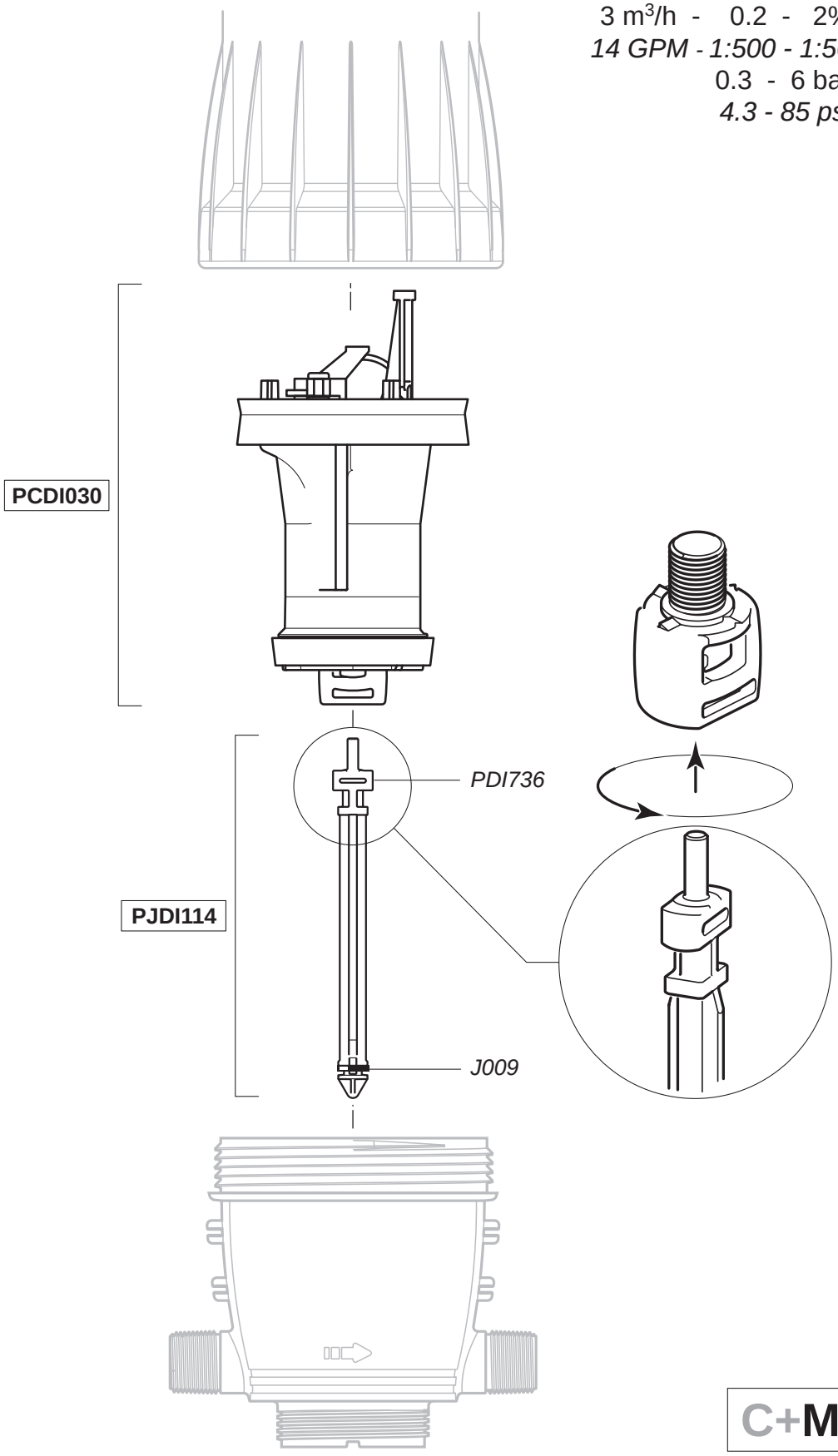

© DOSATRON INTERNATIONAL S.A.S. 2014
D3RE2/1014/D4

C+M

D3RE2

3 m³/h - 0.2 - 2%
14 GPM - 1:500 - 1:50
0.3 - 6 bar
4.3 - 85 psi

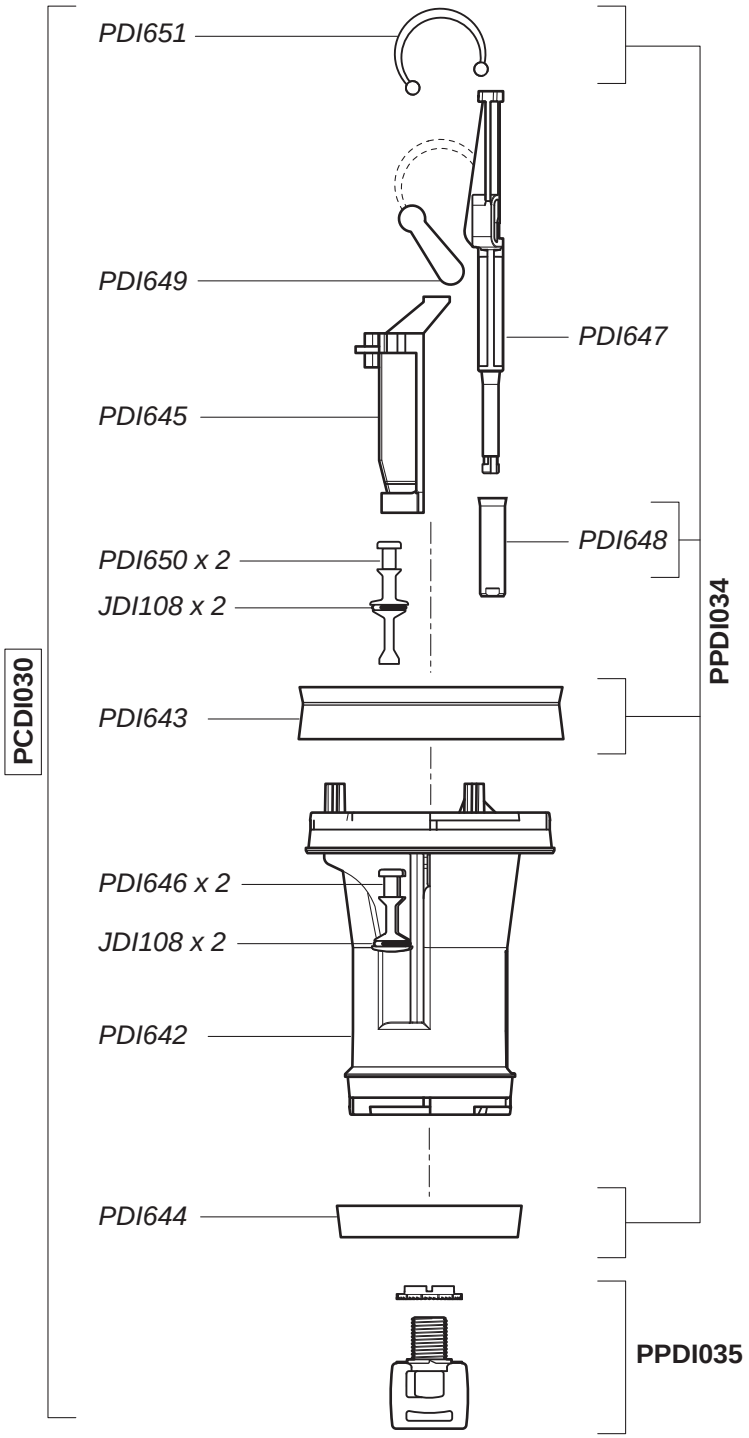

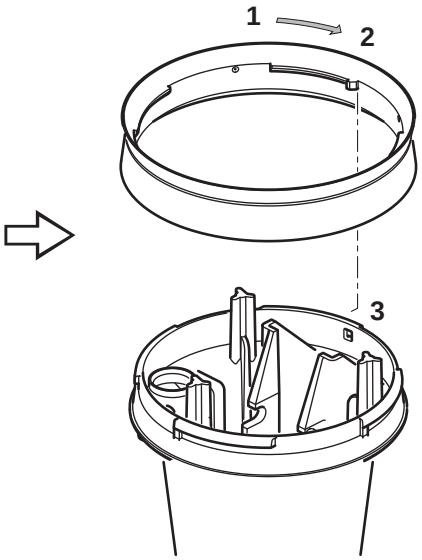

© DOSATRON INTERNATIONAL S.A.S. 2014
D3RE2/1014/D5

D3RE2

3 m³/h - 0.2 - 2%
14 GPM - 1:500 - 1:50
0.3 - 6 bar
4.3 - 85 psi

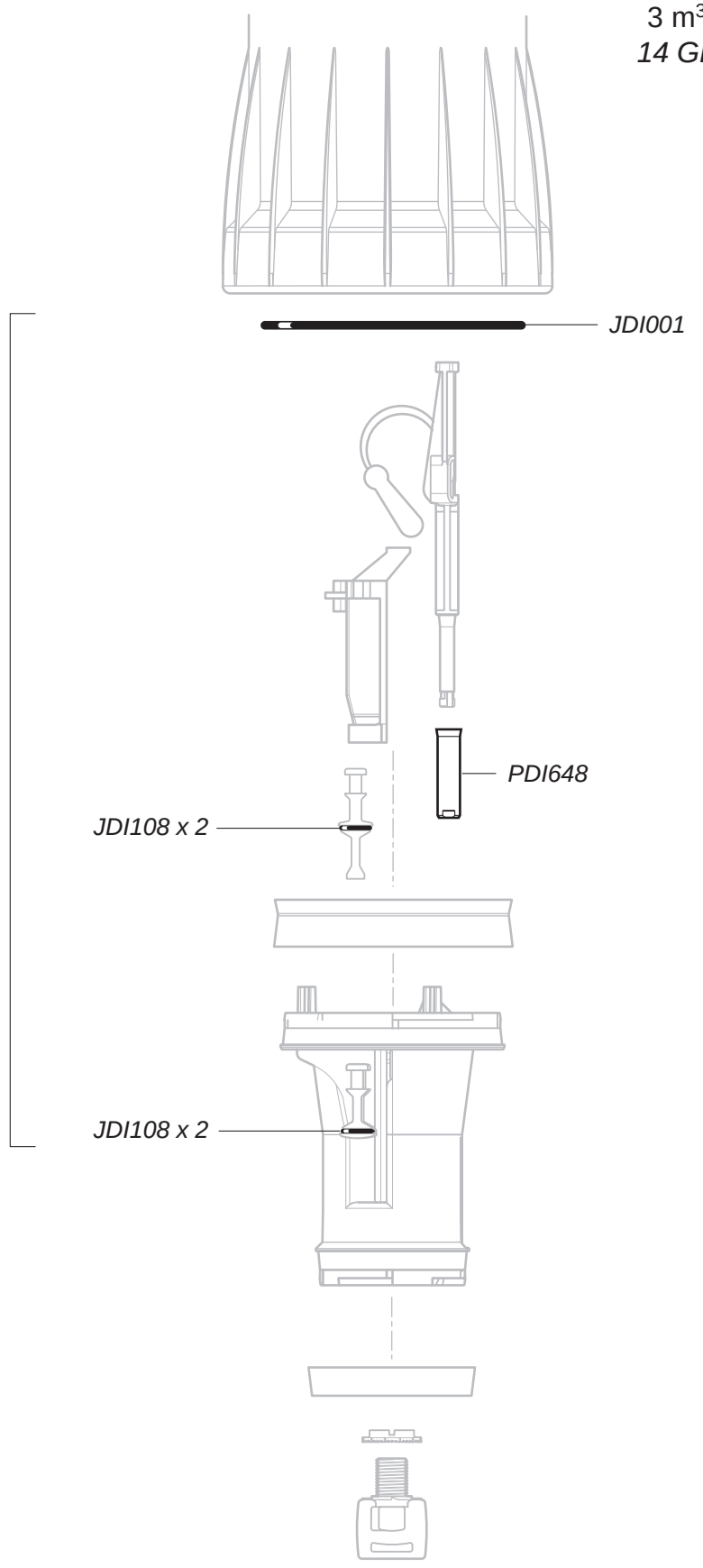

© DOSATRON INTERNATIONAL S.A.S. 2014
D3RE2/1014/D6

C+M

D3RE2

3 m³/h - 0.2 - 2%
14 GPM - 1:500 - 1:50
0.3 - 6 bar
4.3 - 85 psi

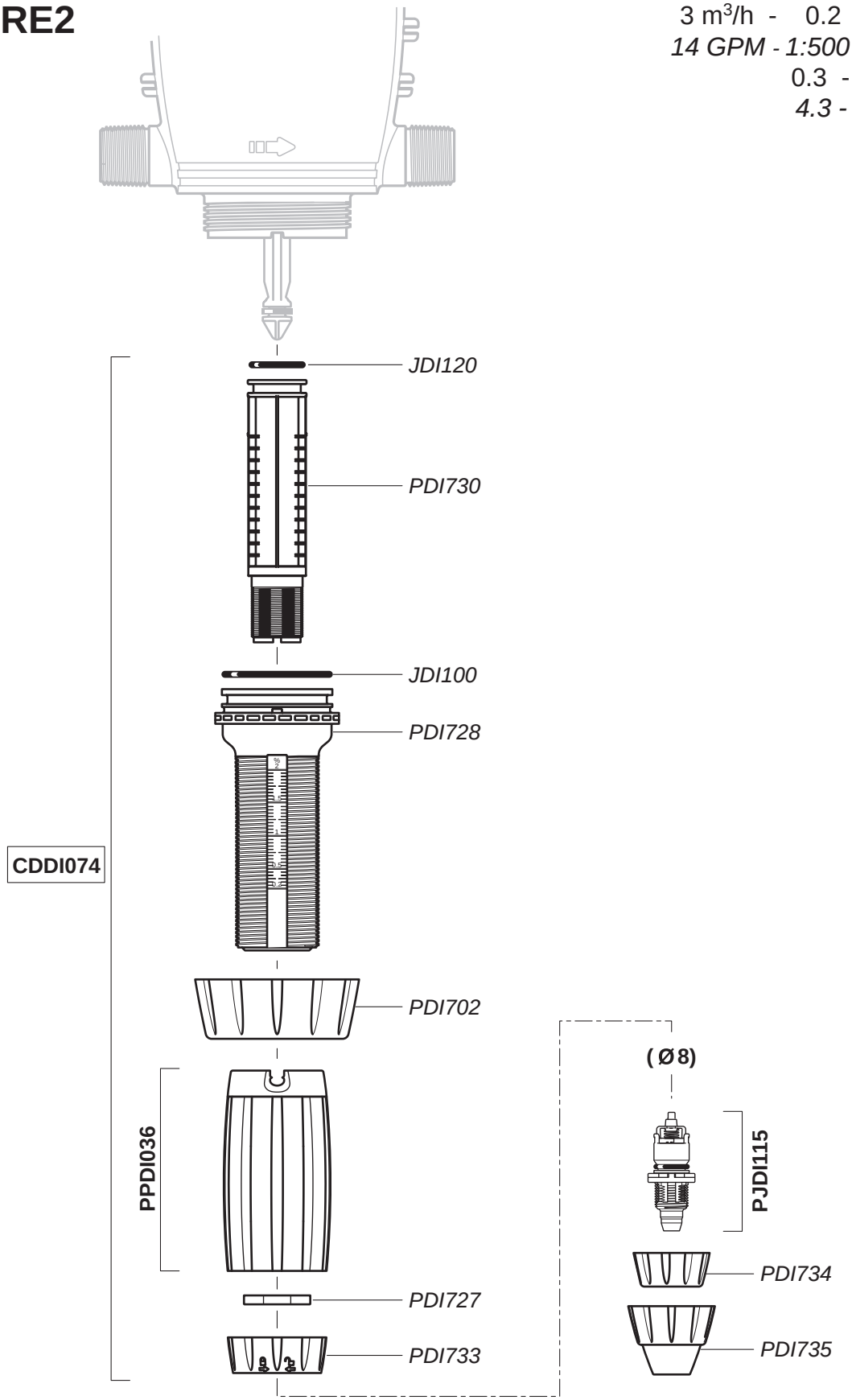

D

© DOSATRON INTERNATIONAL S.A.S. 2014
D3RE2/1014/D7

D3RE2

3 m³/h - 0.2 - 2%
14 GPM - 1:500 - 1:50
0.3 - 6 bar
4.3 - 85 psi

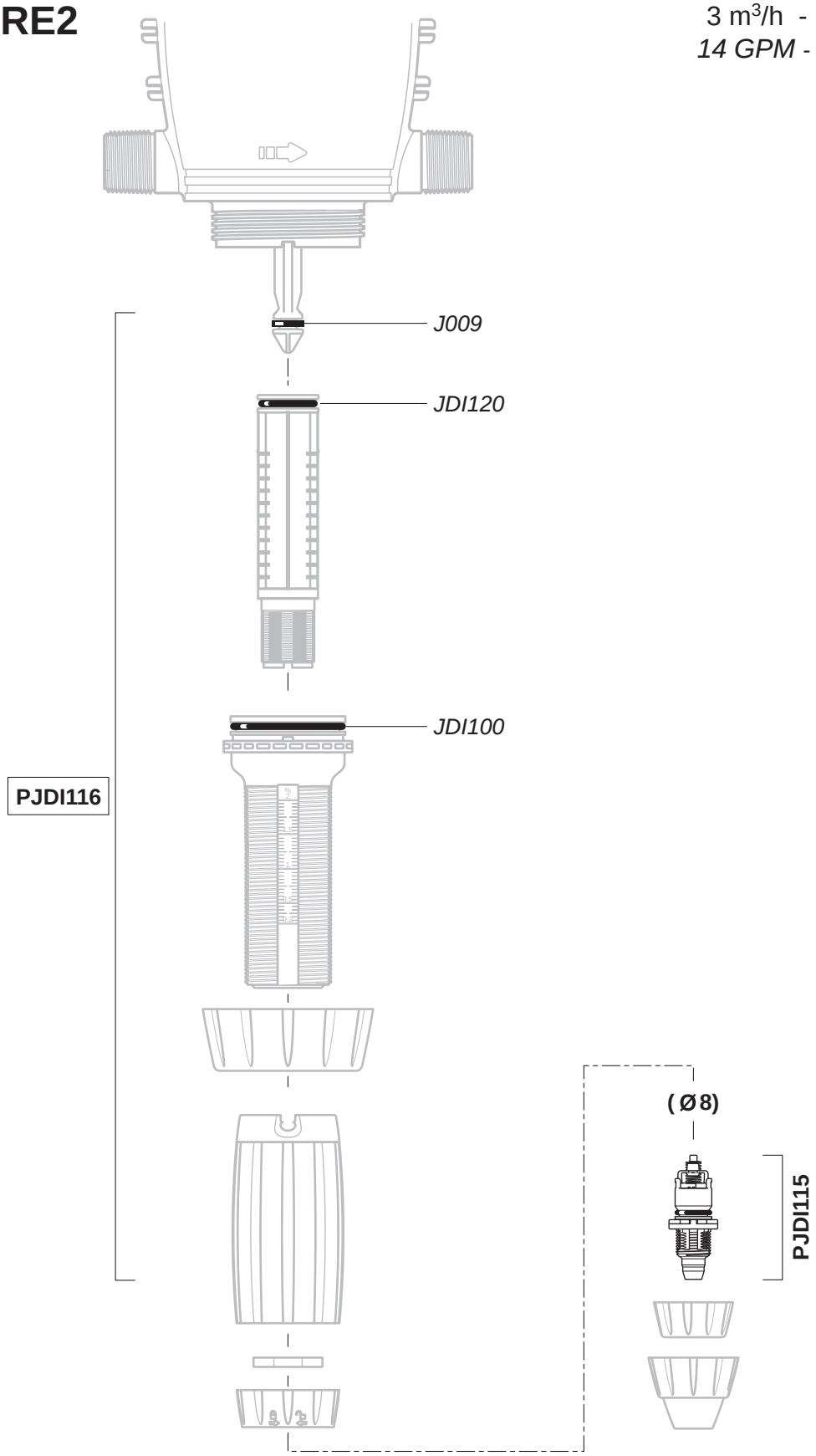

© DOSATRON INTERNATIONAL S.A.S. 2014
D3RE2/1014/D8

D

D3RE2

3 m^3/h - 0.2 - 2%
14 GPM - 1:500 - 1:50
0.3 - 6 bar
4.3 - 85 psi

Option "V"

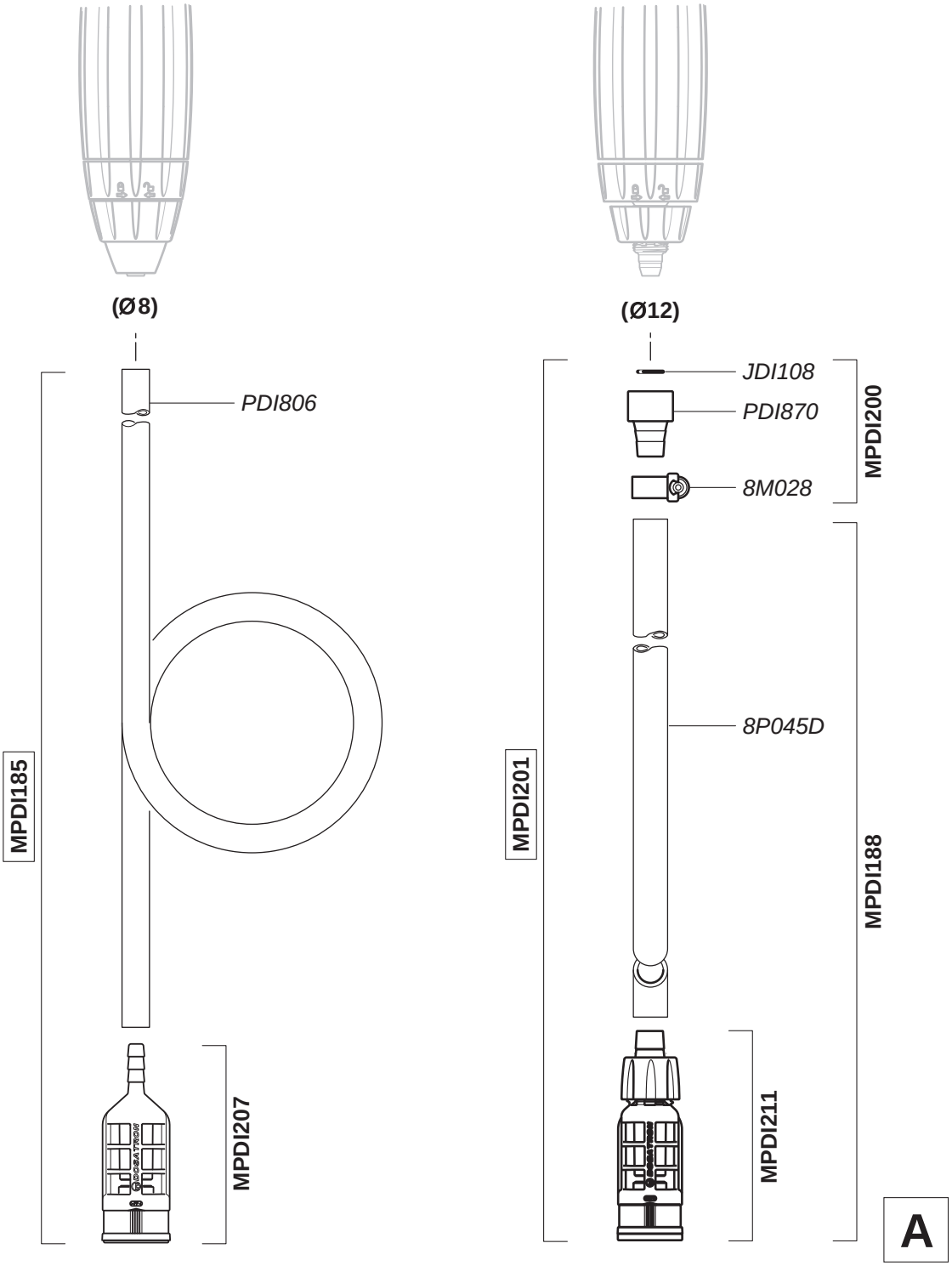

© DOSATRON INTERNATIONAL S.A.S. 2014
D3RE2/1014/D9