D3 0.2 - 2%

3m³/h - 0.2 - 2%
14 GPM - 1:500- 1:50
0.3 - 6 bar
4.3 - 85 psi

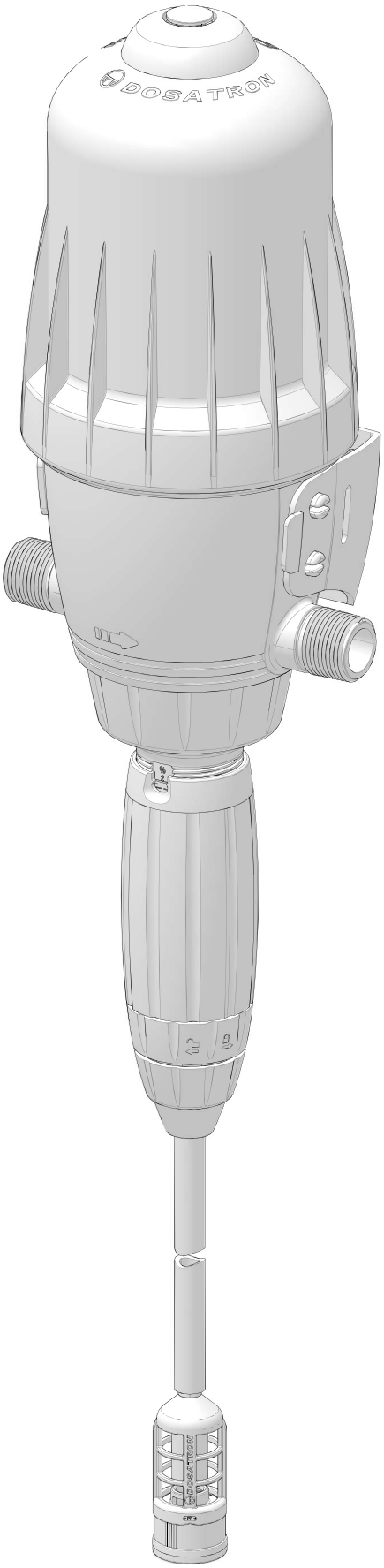

© DOSATRON INTERNATIONAL S.A.S. 2025
D3 0.2 - 2%/0825/ D1

D3 0.2 - 2%

3m³/h - 0.2 - 2%
14 GPM - 1:500- 1:50
0.3 - 6 bar
4.3 - 85 psi

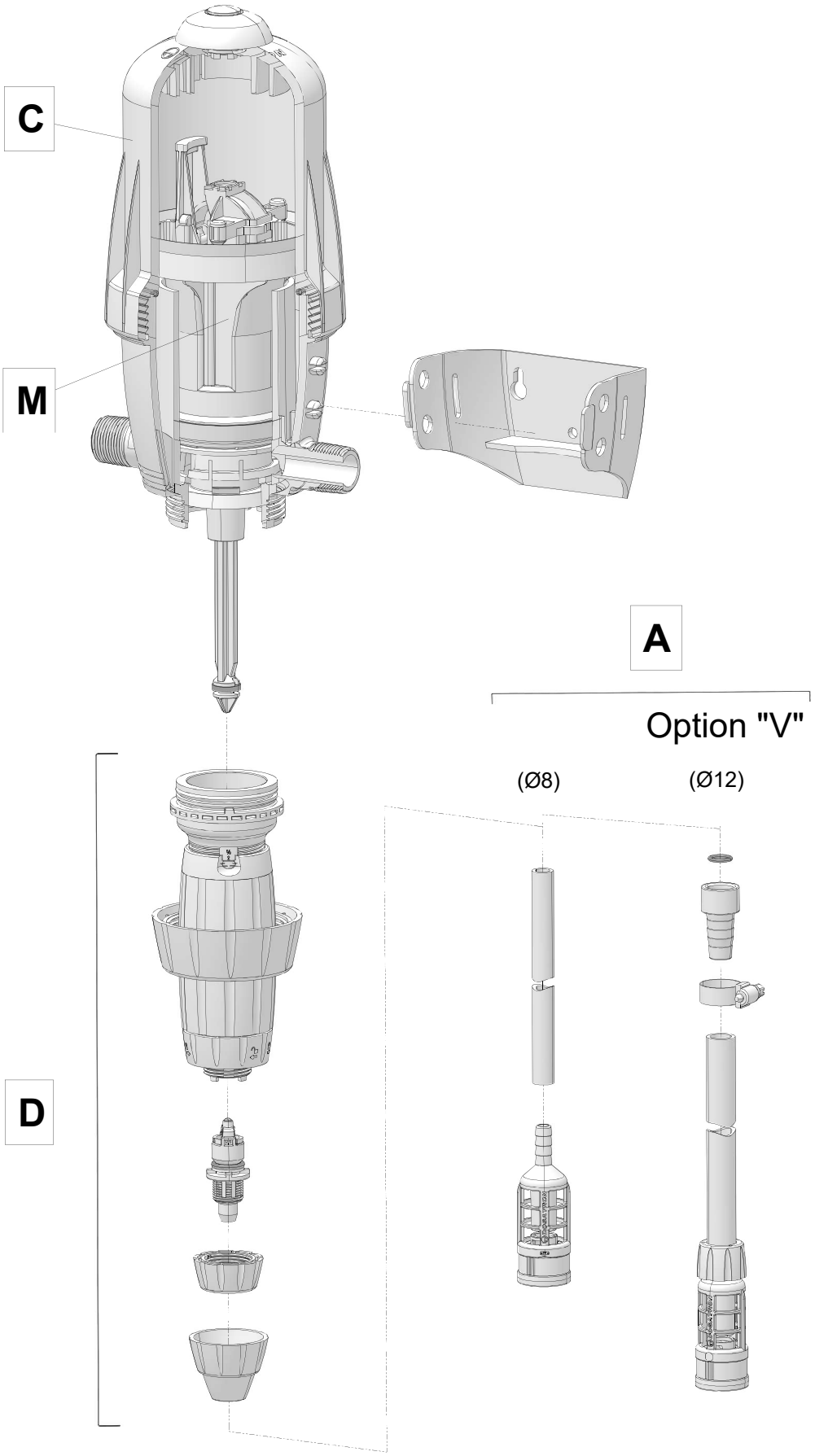

© DOSATRON INTERNATIONAL S.A.S. 2025
D3 0.2 - 2% /0825/ D2

D3IL 0.2 - 2%

3m³/h - 0.2 - 2%
14 GPM - 1:500 -1:50
0.5 - 6 bar
4.3 - 85 psi

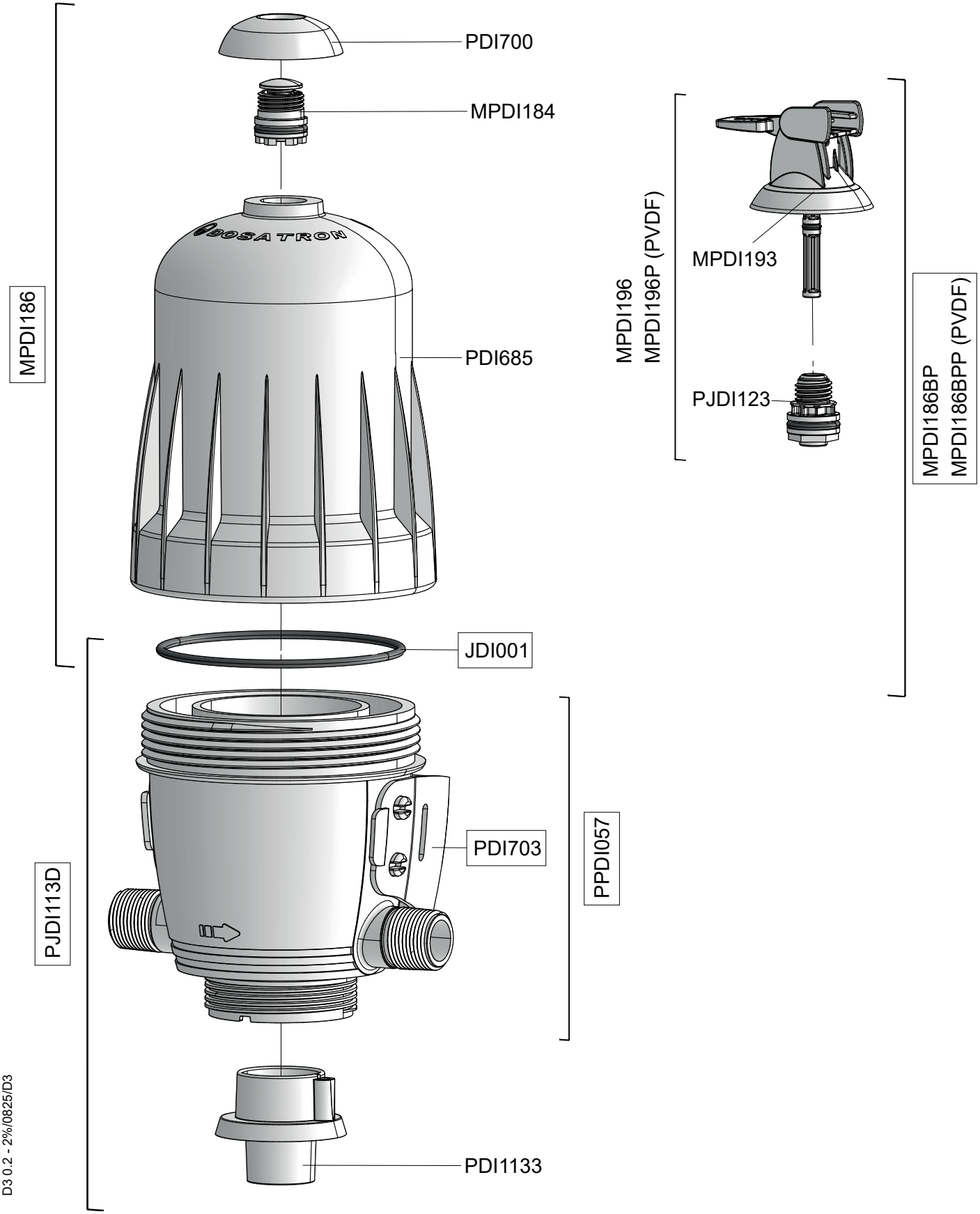

© DOSATRON INTERNATIONAL S.A.S. 2025
D3 0.2 - 2%/0825/D3

C

D3 0.2 - 2%

3m³/h - 0.2 - 2%
14 GPM - 1:500- 1:50
0.3 - 6 bar
4.3 - 85 psi

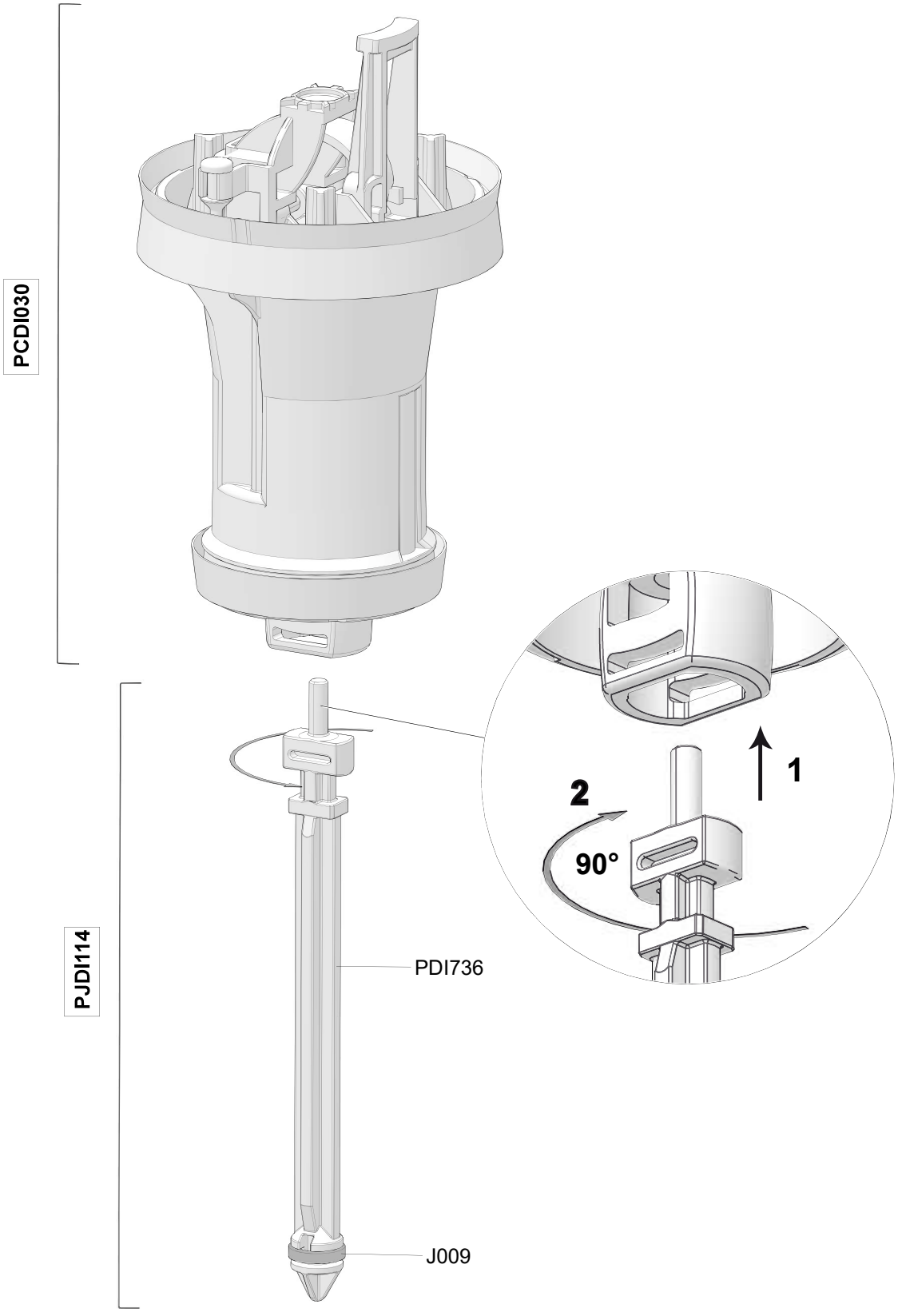

© DOSATRON INTERNATIONAL S.A.S. 2025
D3 0.2 - 2% /0825/ D4

M

D3 0.2 - 2%

3m³/h - 0.2 - 2%
14 GPM - 1:500- 1:50
0.3 - 6 bar
4.3 - 85 psi

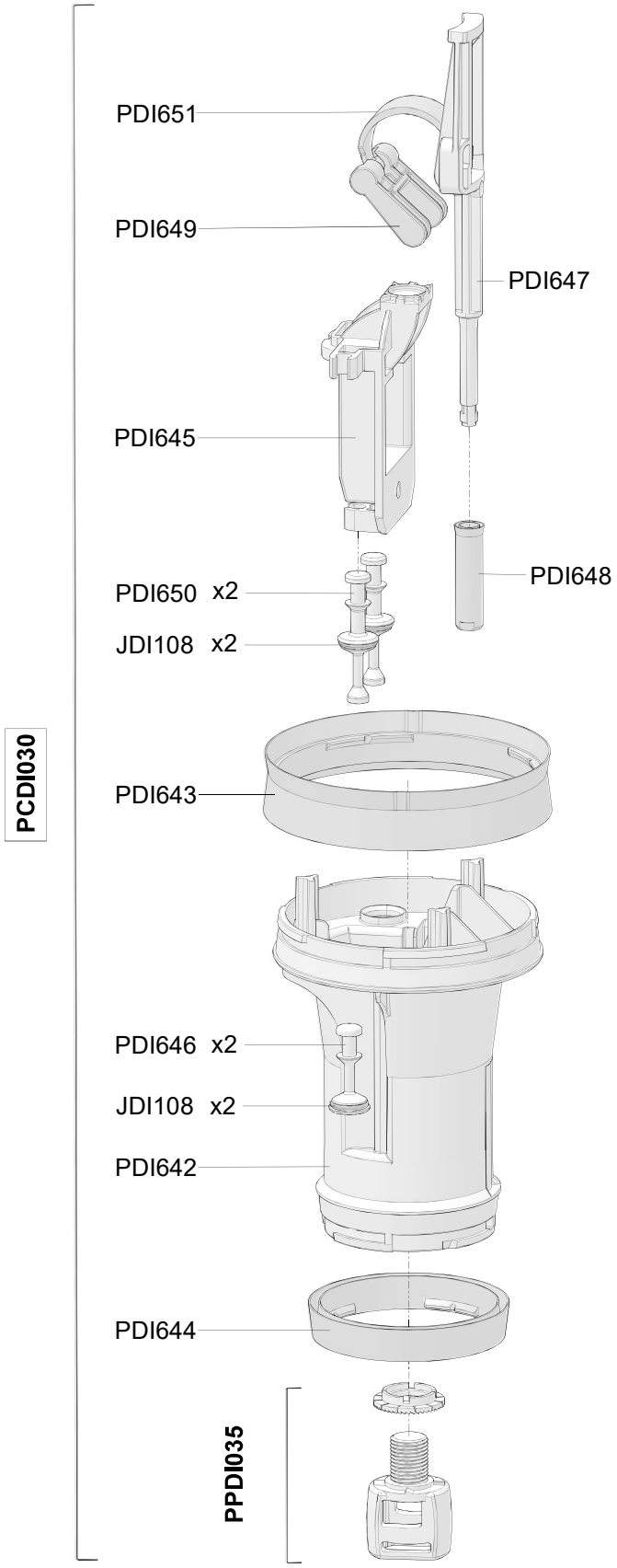

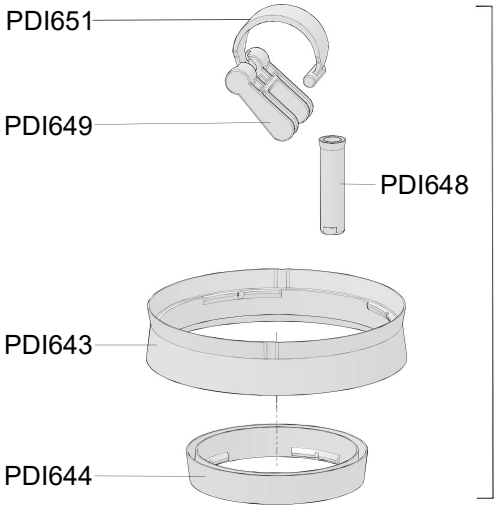

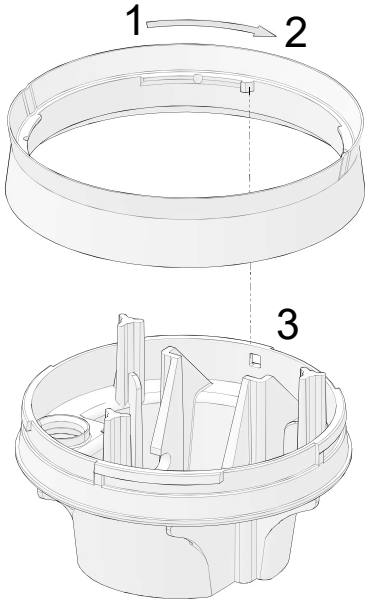

© DOSATRON INTERNATIONAL S.A.S. 2025
D3 0.2 - 2% /0825/ D5

M

D3 0.2 - 2%

3m³/h - 0.2 - 2%
14 GPM - 1:500- 1:50
0.3 - 6 bar
4.3 - 85 psi

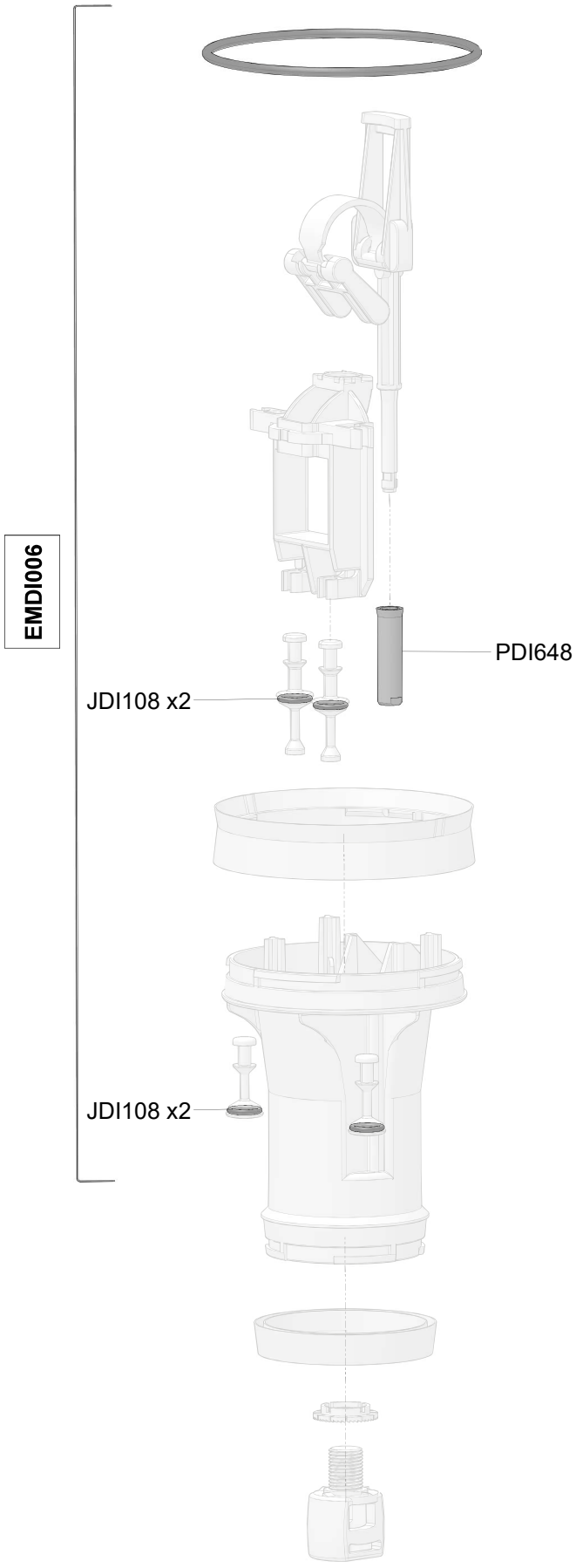

© DOSATRON INTERNATIONAL S.A.S. 2025
D3 0.2 - 2% /0825/ D6

M

D3 0.2 - 2%

3m³/h - 0.2 - 2%
14 GPM - 1:500- 1:50
0.3 - 6 bar
4.3 - 85 psi

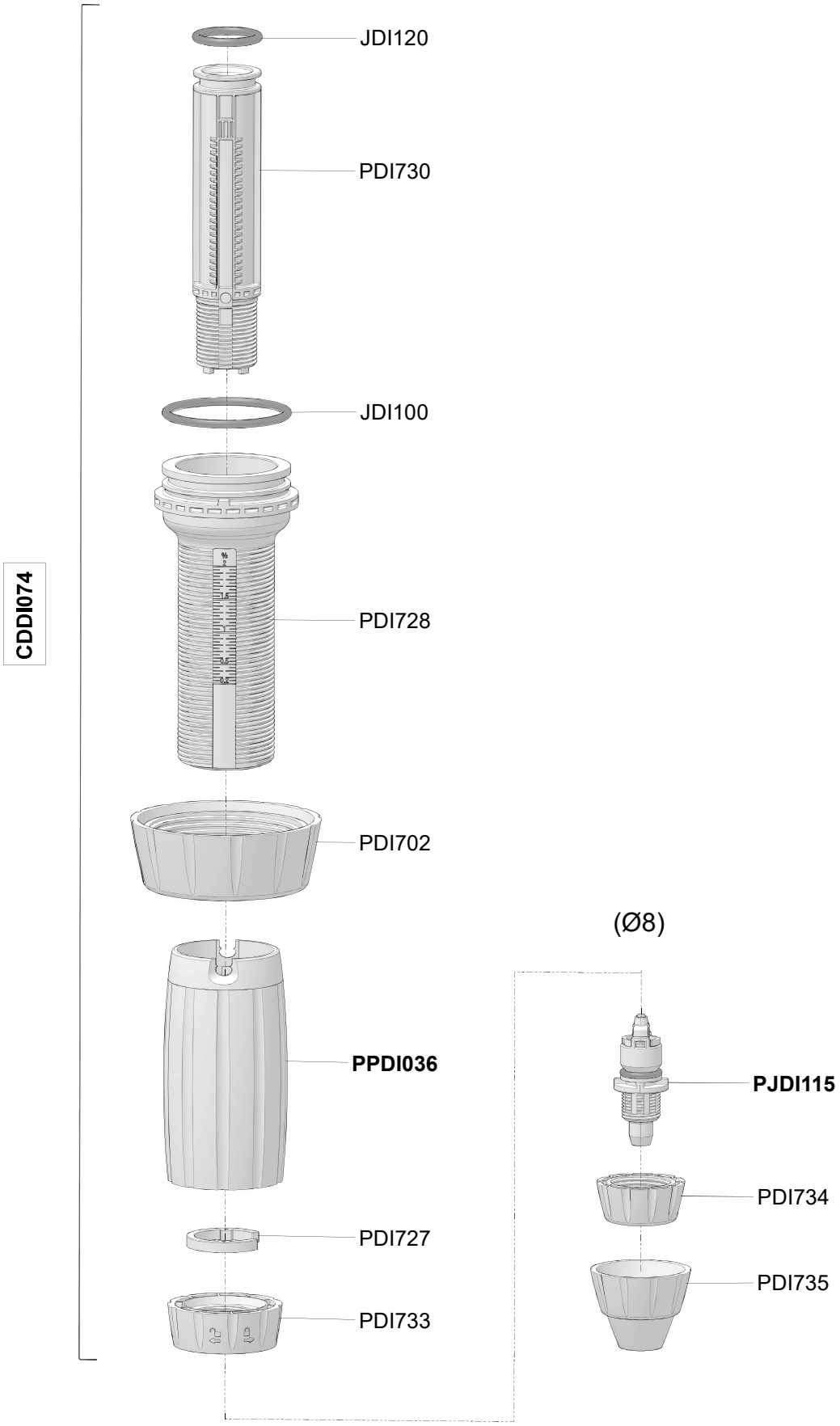

© DOSATRON INTERNATIONAL S.A.S. 2025
D3 0.2 - 2% /0825/ D7

D

D3 0.2 - 2%

3m³/h - 0.2 - 2%
14 GPM - 1:500- 1:50
0.3 - 6 bar
4.3 - 85 psi

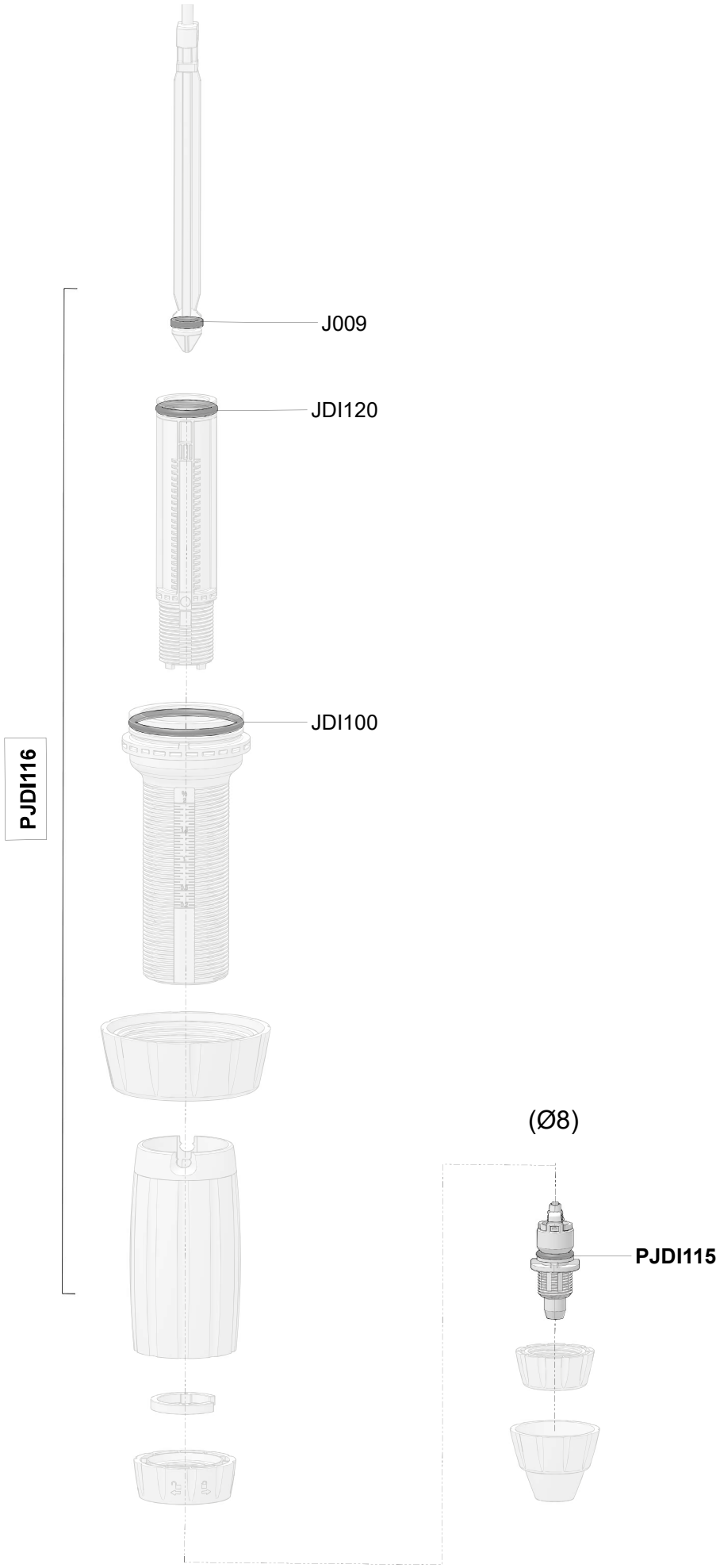

© DOSATRON INTERNATIONAL S.A.S. 2025
D3 0.2 - 2% /0825/ D8

D

D3 0.2 - 2%

3m³/h - 0.2 - 2%
14 GPM - 1:500- 1:50
0.3 - 6 bar
4.3 - 85 psi

Option "V"

(Ø8)

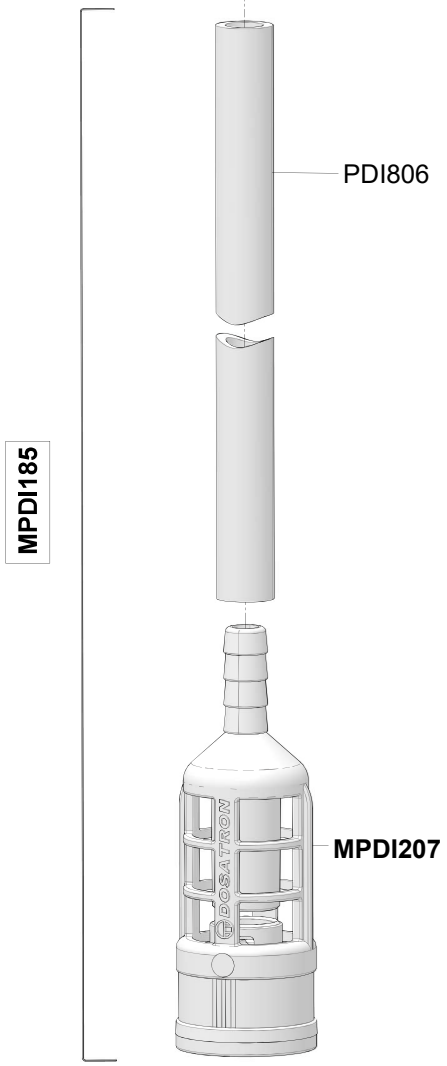

(Ø12)

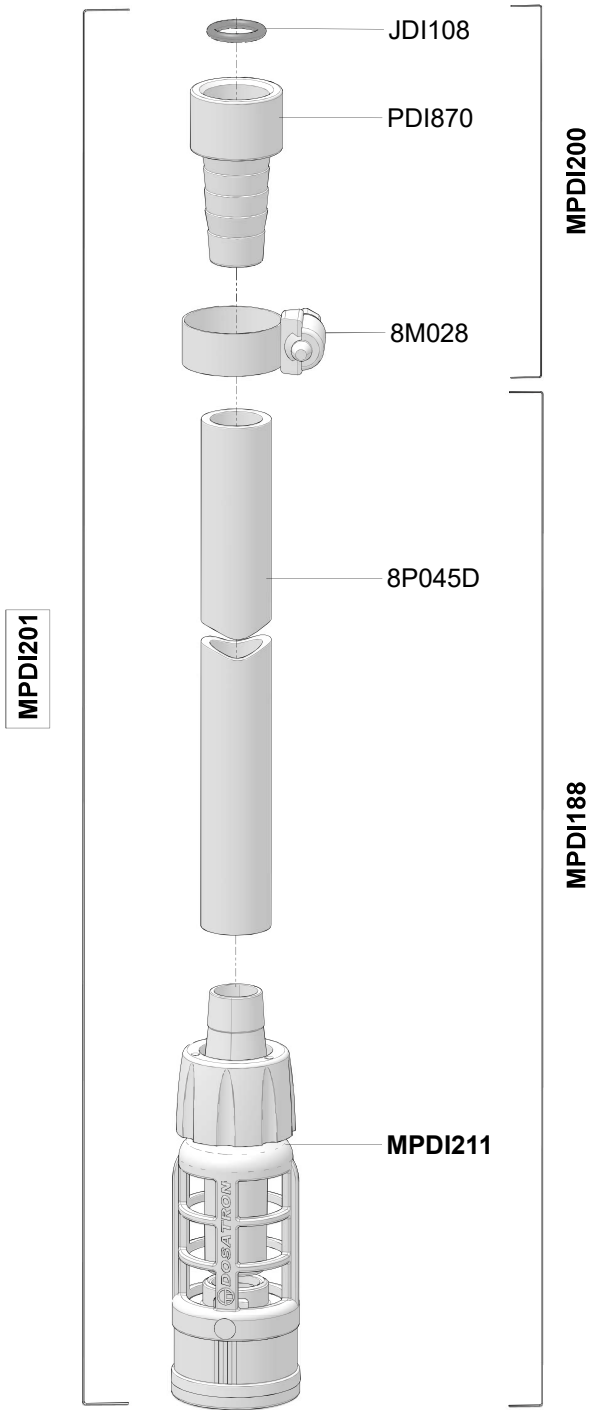

A

© DOSATRON INTERNATIONAL S.A.S. 2025
D3 0.2 - 2% /0825/ D9