POWER RESISTORS

CURRENT SENSE

HIGH VOLTAGE

HIGH ENERGY

HEAT SINKABLE

SURFACE MOUNT

COMPONENT SELECTOR 4000J

Revised May 31, 2011

OHMITE

185 W Algonquin Rd. Suite 230, Arlington Heights IL 60005
Phone: 866-964-6483 Fax: 847-574-7522
ohmite.com email: sales@ohmite.com

OHMITE MANUFACTURING COMPANY COMPONENT SELECTOR 4000J 2011

Military Qualified Resistors	
MIL Spec	**Ohmite Series**
DWG 89040	RW (SMD)
DWG 99001	OX/OY
MIL-R-22	RP Rheostats
MIL-R-26	MIL-R-26
RW20V	250 Series*
RW21V	250 Series*
RW22V	250 Series*
RW23V	250 Series*
RW24V	250 Series*
RW29V/N	270 Series*
RW30V	270 Series*
RW31V/N	270 Series*
RW32V	270 Series*
RW33V/N	270 Series*
RW36V	270 Series*
RW37V/N	270 Series*
RW38V/N	270 Series*
RW39V	270 Series*
RW47V/N	270 Series*
RW67V	80 Series*
RW68V	80 Series*
RW69V	80 Series*
RW70U	80 Series*
RW74U	80 Series*
RW78U	80 Series*
RW79U	80 Series*
MIL-R-29	290E,291E,292E
MIL-R-6749	AN3155 Rheostat
MIL-R-19365	210 Series*
RX29	210 Series*
RX32	210 Series*
RX33	210 Series*
RX35	210 Series*
RX36	210 Series*
RX37	210 Series*
RX38	210 Series*
RX47	210 Series*

*Must be ordered under MIL specification part number

Wherever resistors, rheostats, and other passive components appear in military equipment, almost always will you find the familiar Ohmite name, a recognized mark of quality.

Ohmite products designed to meet military specifications are tested on the same type of equipment used by the government for qualification approval tests. In fact, the Ohmite laboratory and its testing facility have been approved for official qualification testing purposes.

Scale: 0.1 1 10 100 1000 2000

Series	Part Numbers	Page	
Surface Mount			**Wattage Range**
HVF	HVF1206-HVF2512	3	0.3-1.0
LVC	LVC06-LVC25	4	0.25-1.0
MMC	MMC06-MMC25	5	0.1-1.0
MC	MC101-MC204	6	0.75-3.25
60S	602SJR-610SJR	7-8	0.25-1.0
MC1RD	MC1RD	8	1.5
RC	RC0S2-RC1R0	9-11	0.25-1.0
RF	RF0S8-RF1S0	9-11	0.8-1.0
RP	RP1S3-RP3R0	9-11	1.25-3.0
RW	RW1S0-RW3R5	9-11	1.0-3.5
RW (2010)	RW0S6	12	0.6
RW1/RW2	RW1S0CK-RW2S0DK	13	1.0-2.0
TDH	TDH35	58	35
Wirewound Power			**Wattage Range**
WL	WLA-WLC	14	0.5-2.0
WH/WN	WHA-WHC/ WNA-WNC	15	0.5-2.0
CS3	CS3F/J/K	16	3.0
10	12F-15F	17	2.0-5.0
10 (4 Term)	13F-17F	17	3.0-7.0
60	600HR-630HR	18	0.1-3.0
60 (4 Term)	610-650	19	1.0-5.0
20	20J-27J	20	1.0-10.0
40	40F-45F	21	1.0-10.0
80	80F-85F	22	1.0-10.0
RW (MIL)	RW70-RW79	22	1.0-10.0
89	805F-850F	23	5.0-50.0
90	90J- 95J	25	1.5-11.0
Axiohm	1C-5C	25	1.0-10.0
G	GW10-GW13	26	10.0-13.0
HS/HSN	HS100-HS250	27	100-250
Metalohm	20/45M - 60/115M	28	20-115
PC-58	R3J-R5J	29	3.0-5.0
WFH	WFH90 - WFH330	30	90-330
Wirewound "Lug"			**Wattage Range**
200	B5J-B20J	31	5.0-20.0
210	D12K-D1000K	32	12.0-1000
250	F10J-F55J	33	10.0-55.0
270	L12J-L1000J	34	12.0-1000
280	C35K-C1500K, E300K-E2000K	35	35-2000
Wirewound Precision			**Wattage Range**
HPW	101A-520A	39	0.05-2.0
HSP	HS185A-HS520A	40	0.125-1.5
P	PAA-PGZ	40	0.125-2.0
Wirewound/Metal Oxide			**Wattage Range**
TWW	TWW3J-TWW10J	41	3.0-10.0
TWM	TWM3J-TWW10J	41	3.0-10.0
TUW	TUW3J-TUW15J	42	3.0-15.0
TUM	TUM3J-TUM15J	42	3.0-15.0
Wirewound High Energy			
30	30J-35J	43-44	3.0-5.0
825	825J	43-44	25
RH	RH3R0	43-44	3.0
Wirewound High Current			**Amperage Range**
WLRH	WLRHR25-WLRH250	45	1.0-32.0
WLRB/C/F	WLRB-WLRF	46-47	6.5-96.0
PFE/PFR	PFE2K-PFR8K	48-49	5.1-100
14984	14984-10-01/03/04/07	50	100-160
Carbon/Ceramic Composition			**Wattage Range**
RC	RC0S2-RC1R0	9-11	0.25-1.0
Little Demon	OA-OF	51	0.25-1.0
OX/OY	OX-OY	52	1.0-2.0
A	AW-AZ	53	2.5-5.5
Thick Film Power			**Wattage Range**
TA	TA100-TA810	54	3.0-100
TAH	TAH20	55	20
TBH	TBH25	56	25
TCH	TCH35	57	35
TDH	TDH35	58	35
TEH	TEH70	59	70
TFH	TFH85	60	85
TGH	TGHHV-TGHLX	61	120-200
TK	TK20	62	20
TN	TN15P-TN15X	62	15
TL	TL54 - TL122	63-64	27-275
TAP600	TAP600	65	600
TAP1000	TA1K0PH	66	1000
Thick Film High Energy			
TFS	TFSA-TFSF	67	3.0-11.0
Thick Film High Voltage/High Precision			**Voltage Range (KV)**
Slim Mox	SM100-SM410	68-70	1.5-25
Super Mox	MOX910-MOX970	71	15-90
Mini Mox	MOX400 - MOX1125	72	2.5-7.5
Mini Mox E	MOX200-MOX300	73	0.5-1.0
Maxi Mox	MOX-1-12 - MOX-5-13	74	10.0-50
Power Mox	MOX-F - MOX-J	75	20-60
Power Mox Div	MOX-FRD - MOX-JRD	75	20-60
RX-1M	RX-1M	76	1.0
Variable Voltage Controls			**Wattage Range**
R	RCL-RUS	77-78	7.5-1000
C	CA-CMU	79	2.0
A	AS-ASM	79	0.5

Table of Contents

Resistor Construction 2

Surface Mount

HVF Series - High Voltage Film Flip Chip 3
LVC Series - Low Value Thick Film Chip 4
LVK Series - Four Terminal High Precision Current Sense 5
FCSL Series - Metal Foil Current Sense 6-7
MCS Series Metal Element Current Sense 8
Mini Macro Chip Series - High Voltage Thick Film Chip 9
Macrochip Series - High Voltage Thick Film 10
60S Series - Surface Mount Metal Plate Current Sense 11-12
MC1RD Series - SMT-MOX Divider 12
RC Series - Carbon Composition (0.25 and 0.5 Watt) 13-15
RC Series - Ceramic Composition (0.5 Watt and above) 13-15
RF Series - Metal Film 13-15
RP Series - Power Film 13-15
RW Series - Wirewound Power and Low Value 13-15
2010 SMD - 0.6 Watt Wirewound 16
RW1/RW2 Series - Surface Mount Four Terminal Current Sense 17
TDH Series - 35 Watt TO220 Package Heat Sinkable Thick Film 60

Wirewound Power: Industrial and Military Grade

WL Series - Miniature Wirewound Current Sense 18
WH/WN Series - Miniature Molded Wirewound 19
CS3 Series - Wire Element Four Terminal Current Sense 20
10 Series -Two Terminal Axial Wire Element Current Sense 21
10 Series - Four Terminal Axial Current Sense 21
60 Series - Two Terminal Metal Element Current Sense 22
60 Series - Four Terminal Bare Element 23
20 Series - Vitreous Enamel Conformal Axial Terminal 24
40 Series - Ohmicone® Silicone Ceramic Conformal Axial Terminal 25
80 Series - Acrasil® Silicone Ceramic Conformal Axial Terminal 26
RW Series - Military Grade 80 Series 26
89 Series - Metal-Mite® Aluminum Housed Heat Sinkable 27
90 Series - Molded Vitreous Enamel Axial Terminal 28
90 Series - Mounting Clip 29
Axiohm Series - Centohm Coated Axial Terminal 29
G Series - Capacitor Discharge and Symmetry 30
HS/HSN Series - Aluminum Housed Axial terminal Heat Sinkable 31
Metalohm - Cold Rolled Steel Encased Radial Terminal Heat Sinkable 32
PC-58 Series - Tubular Radial Terminal 33
WFH Series - Aluminum Housed Wirewound Power 34
SH Shunt - Precision Metal-Clad Shunt 35

Wirewound "Lug"

200 Series - Brown Devil® Tubular Vitreous 36
210 Series - Dividohm® Tubular Vitreous Adjustable 37
250 Series - Stackohm® Oval Core Vitreous 38
270 Series - Tubular Fixed Vitreous 39
280 Series - Corrib® Tubular High Current, Fixed and Adjustable Vitreous 40
Mounting Hardware 41
Terminals and Tubular Cores 42-43

Wirewound Precision

HPW Series - High Precision Welded Axial and Radial Terminals 44
HSP Series - Hermetically Sealed Precision Axial Terminals 45
P Series - Epoxy Molded Precision Axial Terminals 45

Wirewound and Metal Oxide

TWW/TWM Series - Ceramic Housed Radial Terminal 46
TUW/TUM Series - Ceramic Housed Axial Terminal 47

Wirewound High Energy

30 Series - High Energy Axial Terminal 48-49
825 Series - High Energy Heat Sinkable 48-49
RH Series - High Energy Surface Mount 48-49

Wirewound High Current

PFE/PFR Series - Powr-Rib® Edgewound and Round Wire 50-51
14984 Series - Round Edgewound 52

Carbon and Ceramic Composition

RC Series - Carbon Composition (0.25 and 0.5 Watt) 13-15
RC Series - Ceramic Composition (0.5 Watt and above) 13-15
Little Demon® Series - Carbon Composition Molded Axial Terminal 53
OX/OY Series - Ceramic Composition Axial Terminal 54
A Series - PulsEaters® Ceramic Composition Radial Terminals 55

Thick Film Power

TA Series - Power Chip® Alumina Substrate Radial Terminal 56
TAH Series - 20 Watt TO220 Package Heat Sinkable 57
TBH Series - 25 Watt TO220 Package Heat Sinkable 58
TCH Series - 35 Watt TO220 Package Heat Sinkable 59
TDH Series - 35 Watt TO220 Package Heat Sinkable Surface Mount 60
TEH70 Series - 70 Watt TO247 Package Heat Sinkable 61
TEH100 Series 100 Watt Thick Film Power 62
TFH Series - 85 Watt TO264 Package Heat Sinkable 63
TGH Series - 120 and 200 Watt SOT227 Package Heat Sinkable 64
TGHG Series - 100 Watt SOT227 Package Current Sense 65
TK Series - 20 Watt TO220 Package Thick Film Heat Sinkable 66
TN Series - 15 Watt TO220 Package Thin Film Heat Sinkable 66
TL Series - Modular Heat Sinkable 73-74
TAP600 Series - 600 Watt Heat Sinkable Planar 75
TAP800 Series - 800 Watt Heat Sinkable Planar 76
TAP1000/2000 Series - 1000 & 2000 Watt Heat Sinkable Planar 77

Heat Sinks

D Series Heatsinks for SMT devices 67
E Series for TO-220 devices 68
F Series for TO-218, TO-220 and TO-247 devices 69
M Series Heatsink with two clips for TO-264 and TO-247 70
W Series Heatsinks for TO-220 and TO-247 devices 71
S Series LED Heatsinks 72

Thick Film High Energy

TFS Series - Surge Capable Non Inductive 78

Thick Film High Voltage/High Precision

Slim-Mox Series - Radial Terminal 79-81
Super-Mox - High Voltage 82
Mini-Mox Series - (0.25 Watt and 0.50 Watt) Axial Terminal 83
Mini-Mox Series - Axial Terminal 84
Maxi-Mox Series - Axial Terminal 85
Power-Mox Series - Tubular 86
Power-Mox Dividers - Tubular 86
RX-1M Series - Axial Terminal 87

Variable Voltage Controls

Wirewound Power Rheostats 88-89
Potentiometers - Molded Composition 90
Power Tap Switches 91-92
Rheostat and Tap Switch Hardware 93
Solid State Power Controls 94
Resistance and Capacitance Selectors 95

Application Notes

Product Weights 96
Resistor Selection 97-105
Preferred Standard Resistance Values; Ohm's Law 106
Resistor Terminology 107-108
Resistance Value Abbreviations and Part Numbering Structure 108

Ohmite History

Ohmite Manufacturing Company has been the leading provider of resistive products for high current, high voltage, and high energy applications for over 80 years. The company's full complement of resistor construction includes wirewound, wire element, thick film, and ceramic composition.

Ohmite Manufacturing Company started operations in a small shop on the west side of Chicago in 1925. Founded by David T. Siegel, the company's focus was to manufacture carbon and wire wound "lug" resistors for Chicago's growing radio manufacturing industry. As the electronics industry grew and continued to develop, Ohmite continued evolving to service ever changing design requirements. In 1953, the company moved into a newly built factory and offices in Skokie, Illinois.

Through acquisition, Ohmite added the wirewound capabilities of Memcor-Truohm in 1996 and Ward Leonard Resistors in 1999. With this acquisition, Ohmite added a production facility in Barbados W.I. enabling the company to expand into tighter tolerance technology. Victoreen Components, an experienced specialist in Thick Film technology for high voltage applications, was added to the Ohmite family in 1999.

In 1998, Ohmite was acquired by Heico Companies LLC; a multinational, U.S. based holding company. The Skokie plant after many years of service was vacated and all operations were moved to Matamoros, Mexico while the Headquarters remained in Rolling Meadows, Illinois. 2006 saw Ohmite continue to grow and enhance its product offerings by acquiring Vishay's Angstrohm Rheostat and Ultronix Precision Resistor divisions.

Strengthened by the backing of Heico Companies LLC, Ohmite strives to maintain the flexibility needed to handle both large and small requirements. Made to order parts are always considered and new technologies are always being evaluated. Product availability in today's market is critical to the success of our customers. Ohmite's network of international distributors and sales representatives enables us to fulfill the requirements of an increasingly global marketplace.

We offer a broad selection of Power Resistors to worldwide customers in the industrial, medical, military, and aerospace industries. Through ongoing product development, we continue to provide the latest in resistor technology required by today's sophisticated high voltage, high current, and high energy circuit designs. We thank you for your interest in our products, and invite you to use Component Selector 4000G and www.ohmite.com to find a solution to your design challenges.

Facilities

Rolling Meadows, IL
(Headquarters)
Matamoros, Mexico
(Manufacturing)
Barbados, West Indies
(Manufacturing)
Brownsville, TX
(Distribution Center)

Mission Statement

Ohmite's mission is to be the leading provider of resistive products for high current, high voltage, and high energy applications to worldwide customers in the industrial, medical, military and aerospace markets. Driven by highly efficient and dedicated employees, we will exceed customer and shareholder expectations through excellent service, superior quality and innovative product solutions. Our employees will communicate this mission to our vendors, representatives and distributor partners to solicit and ensure their essential participation. We will deploy our resources in response to changing customer needs while maintaining our service, quality, and profitability in the markets where we choose to compete.

RoHS Changeover Position Statement

In an effort to better serve our customers during our industry's transition to RoHS compliance, Ohmite Manufacturing is committed to stocking both RoHS compliant and non RoHS compliant products whenever possible. RoHS compliant parts will be designated with an "E" within the body of the part number. Non compliant part numbers will remain active throughout this changeover. The RoHS initiative may not affect certain customers in the military and aerospace industry. It is our goal to keep both our RoHS exempt and non exempt customers satisfied with our product selection. All non compliant part numbers will be kept as long as industry demand exists. This strategy will ensure that we will be able to satisfy whatever plating option our customer base requires.

Terms and Conditions of Sale

Factory Terms

Standard payment terms for components ordered from the factory by firms with established credit is 1%, 10th and 25th, net 30 days. F.O.B. plant of manufacture. No freight allowed.

Return Policy

Specific written permission to return goods must be obtained from Ohmite prior to return.

Warranty

No warrants are expressed or implied other than those published in Ohmite policies. Ohmite reserves the right to make changes in product specifications and availability without notice or liability. Some products are electro-mechanical devices. They are subject to mechanical wear and, therefore, have a finite life.

General Notes

Ohmite reserves the right to make changes in product specifications and availability without notice or liability. The information in this catalog is based on data obtained by our own research and isconsidered accurate. However, no warranty is expressed or implied regarding the accuracy of this data, the results to be obtained from the use thereof, or that any such use will infringe on any patent. This information is furnished upon the condition that the person receiving it shall make their own tests to determine the suitability thereof for their particular purpose. Maximum working voltage ratings of all Ohmite products are based upon the maximum resistance value available in each specific series. For each selected resistance, use Ohm's Law ($V=\sqrt{P*R}$) to calculate maximum working voltage.

OHMITE®

HVF Series

High Voltage Flip Chip Film

Ohmite's High Voltage Flip Chip Series incorporates high accuracy screen printing technology to achieve high voltage capability in a stable flip chip SMD chip resistor package. The HVF Series offers unmatched performance in comparison to standard chip resistors. Its unique design provides lower voltage and temperature coefficients, less noise, tighter tolerances, better stability, higher resistance values, and higher voltage ratings. HVF is available in convenient 1206 and 2512 footprints.

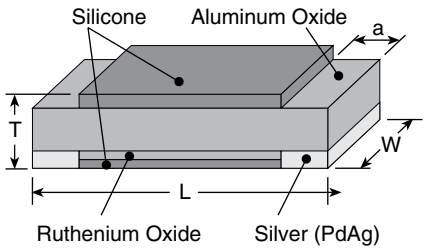

FEATURES

- High voltage up to 3,000 volts
- Industry standard sizes
- Working temperature range –55°C to 200°C
- Designed for automatic insertion

DERATING

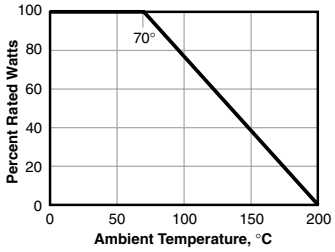

VOLTAGE COEFFICIENT OF RESISTANCE

Series	Resistance Range	VCR (-ppm/V)*
1206	1K ..10MΩ	<3.20
	10M ..100MΩ	<15.00
	100M ..1GΩ	<29.00
	1GΩ .. 5GΩ	<40.00
2512	1K ..30MΩ	<0.80
	30M ..300MΩ	<4.00
	300M ..3GΩ	<7.00
	3GΩ .. 5GΩ	<10.00

*Typical values. Voltage coefficient of resistance strongly depends on the resistance value. Contact Ohmite for details.

STANDARD PART NUMBERS FOR HVF

Ohms	HVF1206---	HVF2512---
25K	---T2502FE	---T2502FE
50K	---T5002FE	---T5002FE
75K	---T7502FE	---T7502FE
100K	---T1003FE	---T1003FE
250K	---T2503FE	---T2503FE
500K	---T5003FE	---T5003FE
1000K	---T1004FE	---T1004FE
1500K	---T1504FE	---T1504FE
2000K	---T2004FE	---T2004FE
2500K	---T2504FE	---T2504FE
5000K	---T5004FE	---T5004FE
7500K	---T7504FE	---T7504FE
1G	---T1007JE	---T1007FE
		---T5007FE
10G	---T1008JE	

SPECIFICATIONS

Resistance Range: 1KΩ to 100GΩ

Resistance Tolerance: ±1% std.; 5% for HVF1206 100MΩ-10GΩ more; 10% for 10GΩ+

Temperature Coefficient: ±100ppm std.

Coating: Silicone

Solder Pad Material: Silver (PdAg)

***Note**: HVF Series should not be used with tin-lead based solder compositions. Only silver-based solder compositions are recommended. Care should be taken in the selection of the solder flux contained in the solder paste. Some pastes are "corrosive" and can damage the coating and also the resistive layer during the soldering process at high temperature. PCBs must be properly cleaned to remove any layers of moisture containing halides below the resistor.*

We recommend Halide Free (or Halogen Free) solder pastes, containing for example ROL0 or similar.

It is advisable for the PCB layout to provide a slot, or air gap, underneath the downward facing resistor element, thereby increasing insulation resistance and reducing the possibility of capacitive coupling to the PCB. Under no circumstances should any copper trace be present in the layout directly under the resistive element.

LAND PATTERN (in.)

Land pattern dimensions are for reference only

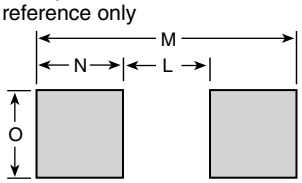

Size	M	N	O	L
HVF1206	0.150	0.040	0.080	0.070
HVF2512	0.288	0.062	0.140	0.164

Series	Resistance Range	Tol.	Power Rating (mW)	Voltage Rating*	Dimensions (in. ±0.008) L	W	a	T (max.)	Std. Qty./ Reel**
HVF1206	1K-100M	1% std.	300	1,500	0.128	0.063	0.018	0.028	1000
	100M-10G	5%							
	10G-100G	10%							
HVF2512	1K-100G	1% std.	1000	3,000	0.252	0.126	0.026	0.032	1000

*Use Ohm's Law (V= √ P*R) to calculate maximum working voltage.
**Maximum available quantity per reel is 3,500 for 1206 size and 2,000 for 2512 size; call 1-866-9-OHMITE for details.

PERFORMANCE DATA

Insulation Resistance	>10,000 MΩ	500 Volt 25 °C 75% relative humidity
Dielectric Strength	>1,000 Volt	25 °C 75% relative humidity
Thermal Shock	Δ R/R < 0.1% typ., 0.50% max.	MIL Std. 202, method 107 Cond. C (IEC 68 -2 -14)
Overload	Δ R/R < 0.1% typ., 0.50% max.	1,5 x Pnom, 5 sec (do not exceed max. voltage)
Moisture Resistance	Δ R/R < 0.1% typ., 0.50% max.	MIL Std. 202, method 106 (IEC 68 -2 -3)
Load Life	Δ R/R < 0.1% typ., 0.50% max.	1000 hours at rated power (IEC 115 -1)

TAPE AND REEL SPECIFICATIONS

Per EIA Std. RS-481

Tape

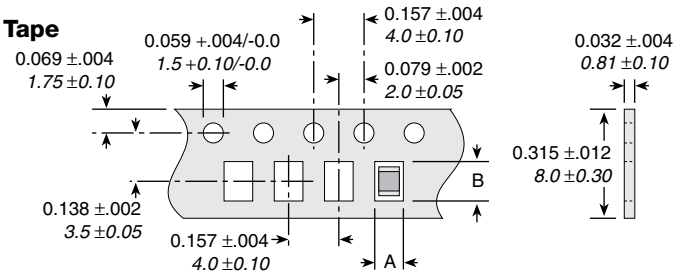

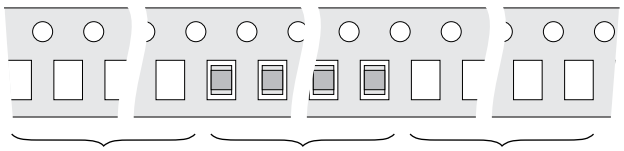

Trailer
230mm min.–560mm max. May consist of carrier and/or cover tape followed by a minimum of 160mm of carrier with sealed cover tape

Components

Leader
Minimum of 40 empty component pockets sealed with cover tape

Reel

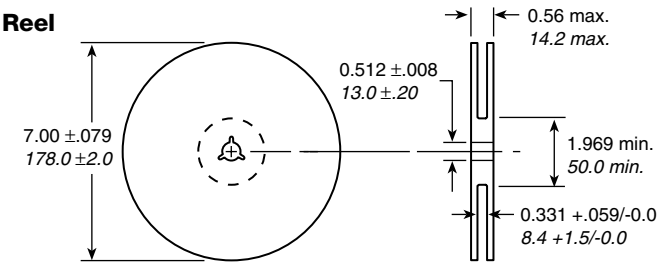

ORDERING INFORMATION

H V F 1 2 0 6 T 1 0 0 4 J E T

- **High Voltage Flip Chip Series**
- **Case Size**: 1206, 2512
- **TCR**: T = 100 ppm; V = 50 ppm*
- *Not available for all resistance values; consult factory
- **Ohms**: First 3 digits are significant; last digit specifies number of zeros to follow. Example: 1006 = 100MΩ
- **Tolerance**: F = 1%, G = 2%, J = 5%
- **RoHS Compliant**
- **Taping Code**: blank = bulk package; T = tape & reel

LVC Series

Low Value Thick Film Chip

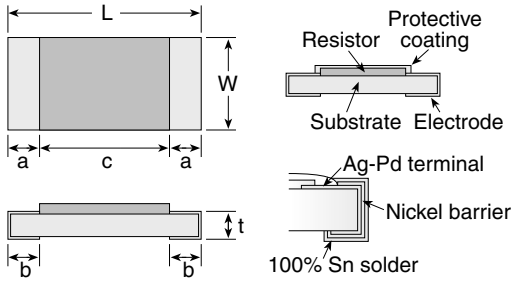

Ohmite's LVC Series low value chip resistors are ideal for today's current sense applications requiring low profile, low cost solutions. Available in 0.25, 0.5, and 1 watt sizes, footprints are 1206, 2010, and 2512 size respectively. These resistors are offered in ohmic ranges from 0.05 ohm to 1ohm in standard ±5% E24 values, 1% tolerance available on request.

The LVC Series resistors are well suited for a variety of industrial and commercial applications.

FEATURES

- Industry Standard Sizes
- Terminal Barrier Resists Ag Migration
- Working Temperature Range is from -55°C to +125°C
- Designed for Automatic Insertion

APPLICATIONS

- Switching Power Supplies
- Cellular
- Telecom and Wireless
- Computer
- RF

SPECIFICATIONS

Material
Substrate: Alumina
Resistor: Thick Film
Coating: Glass

Series	Power Rating (W @70°C)	Resistance Range (Ω)	TCR (ppm/°C)	Tolerance	Available Values
LVC06	0.25W	0.010-0.030	0 ±500ppm	1%	E12
		0.033-0.050	0 ±200ppm	1%	E12
		0.056-0.068	0 ±100ppm	1%	E12
		0.100-0.976	0 ±200ppm	1%, 5%	E24, E96
LVC20	0.5W	0.010-0.030	0 ±500ppm	1%	E12
		0.033-0.068	0 ±200ppm	1%	E12
		0.100-0.976	0 ±100ppm	1%, 5%	E24, E96
LVC25	1.0W	0.010-0.030	0 ±500ppm	1%	E12
		0.033-0.068	0 ±200ppm	1%	E12
		0.100-0.976	0 ±100ppm	1%, 5%	E24, E96

PERFORMANCE DATA

Load Life	1000 Hrs 70°C	ΔR ± (3.0% + 0.01) Ω
Humidity	1000 Hrs 60°C 90~95% RH	ΔR ± (2.0% + 0.01) Ω
Temperature Cycle	5 Cycles -55°C to +125°C	ΔR ± (1.0% + 0.01) Ω
High Temp Operation	1000 Hrs 125°C	ΔR ± (1.0% + 0.01) Ω
Low Temp Operation	1000 Hrs -55°C	ΔR ± (1.0% + 0.01) Ω
Short Time Overload	5 Sec. 2.5 x Rated Power	ΔR ± (2.0% + 0.01) Ω
Effects of Solder Heat	10 Sec. 260°C	ΔR ± (1.0% + 0.01) Ω
Derating	100% @ 70°C, Derates Linearly to Zero @ 125°C	

DIMENSIONS (in.)

Size	L	W	t	a	b	c
LVC06 (EIA size 1206)	**0.126** +0.002 -0.008	**0.063** +0.002 -0.006	**0.02** +0.004 -0.004	**0.02** +0.010 -0.010	**0.02** +0.012 -0.012	**0.09**
LVC20 (EIA size 2010)	**0.197** +0.008 -0.008	**0.098** +0.006 -0.006	**0.024** +0.004 -0.004	**0.024** +0.008 -0.008	**0.020** +0.012 -0.012	**0.15**
LVC25 (EIA size 2512)	**0.25** +0.008 -0.008	**0.13** +0.008 -0.008	**0.02** +0.004 -0.004	**0.03** +0.008 -0.008	**0.03** +0.008 -0.008	**0.20**

ELECTRICAL

Electrical		LVC06 1206	LVC20 2010	LVC25 2512
Rated Power Watts		0.25	0.50	1.0
Temperature Coefficient ppm/°C Resistance Range (Ω)	0.05 - 0.09	N/A	350	350
	0.10 - 0.18	200	100	100
	0.20 - 1.0	100	100	100
Max. Working Volts	$V = \sqrt{PR}$	(P = Rated Watts, R = Resistance Value)		
Resistance Tolerance	±1% (for values ≥0.1Ω: ±1% and ±5%; see below)			
Quantity Per Reel		5,000	4,000	4,000

Ohm range	Tol.	Available Ohm Values
0.01 to 0.068	**1%**	0.01, 0.012, 0.015, 0.018, 0.02, 0.022, 0.024, 0.027, 0.025, 0.03, 0.033, 0.039, 0.04, 0.047, 0.05, 0.056, 0.06, 0.068
0.1 to 0.976	**1%**	0.1, 0.102, 0.105, 0.107 0.11, 0.12, 0.113, 0.115, 0.118, 0.121, 0.124, 0.127, 0.13, 0.133, 0.137, 0.14, 0.143, 0.147, 0.15, 0.154, 0.158, 0.16, 0.162, 0.165, 0.169, 0.174, 0.178, 0.18, 0.182, 0.187, 0.191, 0.196, 0.2, 0.205, 0.21, 0.215, 0.221, 0.226, 0.232, 0.237, 0.243, 0.249, 0.255, 0.261, 0.267, 0.27, 0.274, 0.28, 0.287, 0.294, 0.3, 0.301, 0.309, 0.316, 0.324, 0.33, 0.332, 0.34, 0.348, 0.357, 0.36, 0.365, 0.374, 0.383, 0.39, 0.392, 0.402, 0.412, 0.422, 0.43, 0.432, 0.442, 0.453, 0.464, 0.47, 0.475, 0.487, 0.499, 0.51, 0.511, 0.523, 0.536, 0.549, 0.56, 0.562, 0.576, 0.59, 0.604, 0.619, 0.62, 0.634, 0.649, 0.665, 0.68, 0.681, 0.698, 0.715, 0.732, 0.75, 0.768, 0.787, 0.806, 0.82, 0.825, 0.845, 0.866, 0.887, 0.909, 0.91, 0.931, 0.953, 0.976
	5%	0.1, 0.11, 0.12, 0.13, 0.15, 0.16, 0.18, 0.20, 0.22, 0.24, 0.27, 0.3, 0.33, 0.36, 0.39, 0.43, 0.47, 0.51, 0.56, 0.62, 0.68, 0.75, 0.82, 0.91

LAND PATTERN (in.)

Land pattern dimensions are for reference only

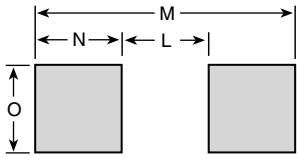

Size	M	N	O	L
LVC06	0.146	0.040	0.080	0.066
LVC20	0.229	0.056	0.120	0.117
LVC25	0.288	0.068	0.150	0.152

REEL SPECIFICATIONS

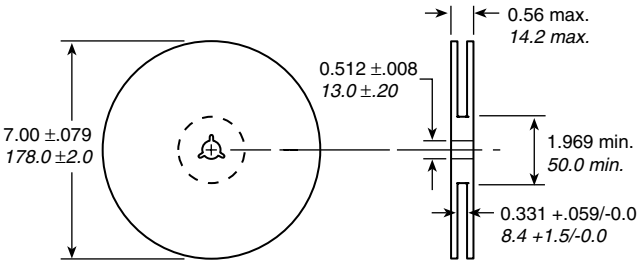

Our friendly Customer Service team can be reached at 866-9-OHMITE

ORDERING INFORMATION

RoHS Compliant

L V C 0 6 J R 2 4 9 E V

- **Low Value Chip Series**
- **Case Size**: 06 = 1206, 20 = 2010, 25 = 2512
- **Tolerance**: F = 1%, J = 5%
- **Ohms**: R249 = 0.249, 1R00 = 1.0
- **Taping Code**: blank = bulk package, V = reel taped

Check product availability at **www.ohmite.com**

LVK Series

Four Terminal High Precision Current Sense

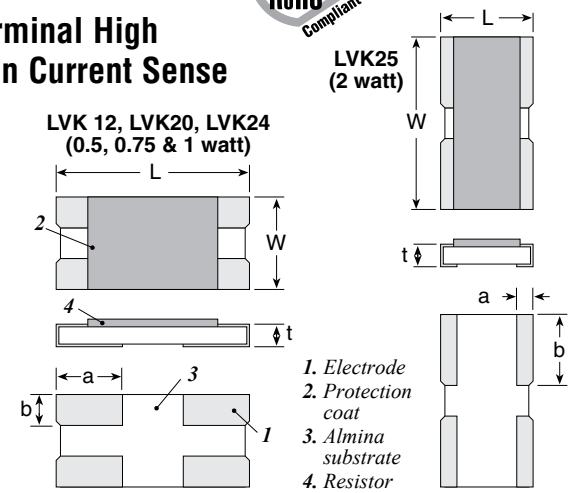

Current sense resistors enable the measurement of current flow in a circuit by monitoring a voltage drop across a precisely calibrated resistance. The LVK chip features four terminals, also known as a "Kelvin" configuration. This configuration enables current to be applied through two opposite terminals and a sensing voltage to be measured across the other two terminals, eliminating the resistance and temperature coefficient of the terminals for a more accurate current measurement.

Isolating the voltage and current terminals (see schematic) facilitates a very accurate current measurement. Ohmite's proprietary technology offers an excellent Temperature Coefficient of Resistance (TCR) even for very low resistance values. The resistive element consists of a durable, anti-corrosive metal alloy that combines reliable performance with the ability to withstand harsh environments.

FEATURES

- Designed for automatic insertion
- Industry standard sizes
- High-precision kelvin connect capability in a small package

SPECIFICATIONS

Resistance Range: 0.001Ω - 0.05Ω

Operating Temperature Range: -40°C to +125°C

Rated Ambient Temperature: +70°C

Resistance Tolerance: 0.5% and 1% standard

Temperature Coefficient: *LVK12, LVK20, LVK24:* 50ppm standard
LVK25: 100ppm, 200ppm, or 300ppm based on resistance value

Coating Material: epoxy resin

Terminals: 100% matte tin

SCHEMATIC

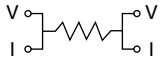

V = sensing terminal (voltage)
I = current terminal

Series	Pkg. Size	Power Rating (W @70°C)	Resistance Range (Ω)	TCR (ppm/°C)	Tolerance	Available Values
LVK12	1206	0.5W	0.01-0.05	50ppm	0.5%, 1%	E12
LVK20	2010	0.75W	0.01-0.05	50ppm	0.5%, 1%	E12
LVK24	2412	1.0W	0.01-0.05	50ppm	0.5%, 1%	E12
LVK25	1224	2.0W	0.001 0.002-0.004 0.005-0.01	300ppm 200ppm 100ppm	1%	1, 2, 3, 4, 5, 6, 7, 8, 9, 10 mΩ

DIMENSIONS (mm)

Size	L	W	t	a	b
LVK12 (1206)	3.2 ±0.2	1.6 ±0.2	0.5 ±0.15	1.0 ±0.2	0.55 ±0.2
LVK20 (2010)	5.0 ±0.2	2.5 ±0.2	0.5 ±0.15	1.7 ±0.2	0.9 ±0.2
LVK24 (2412)	6.4 ±0.2	3.2 ±0.2	0.5 ±0.15	2.1 ±0.2	1.2 ±0.2
LVK25 (1224)	3.2 ±0.2	6.4 ±0.2	0.5 ±0.2	0.4 ±0.2	2.7 ±0.2

ORDERING INFORMATION

RoHS Compliant

L V K 2 5 R 0 0 5 F E R

Series	Case Size	Ohms	Tolerance	Taping Code
	12 = 1206 20 = 2010 24 = 2412 25 = 1224	R005 = 0.005	D = 0.5% F = 1%	R = 1,000 pc/reel

Check product availability at **www.ohmite.com**

LAND PATTERN (mm)

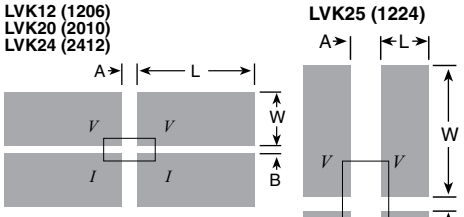

Series	L	W	A	B
LVK12	1.75	1.10	1.00	0.30
LVK20	2.55	1.55	1.40	0.50
LVK24	3.25	1.90	2.00	0.60
LVK25	1.40	3.30	2.20	1.00

STANDARD VALUES

LVK12	LVK20	LVK24	LVK25
1% Tolerance			
0.01	0.01	0.01	0.001
0.012		0.012	0.002
	0.015	0.015	0.003
			0.005
0.02	0.02	0.02	
0.024	0.027		
0.03	0.03	0.03	0.01
		0.039	
	0.039		
0.047		0.047	
0.05	0.05	0.05	
0.5% Tolerance			
0.01	0.01	0.01	
0.02	0.02	0.02	
0.03	0.03	0.03	
0.05	0.05	0.05	

REEL (mm)

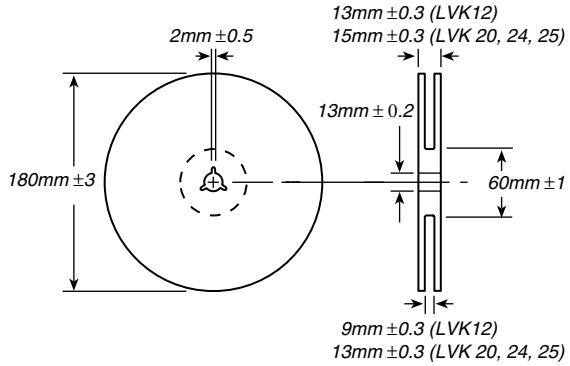

FCSL Series

Metal Foil Current Sense

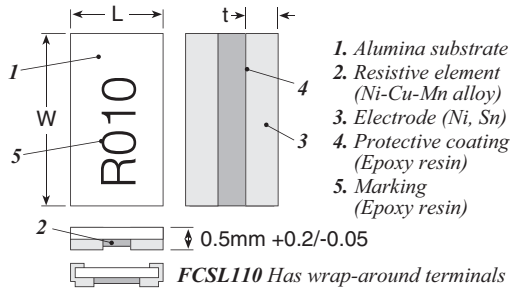

1. *Alumina substrate*
2. *Resistive element (Ni-Cu-Mn alloy)*
3. *Electrode (Ni, Sn)*
4. *Protective coating (Epoxy resin)*
5. *Marking (Epoxy resin)*

Ohmite continues to add to its complement of Current Sense offerings with the FCSL Series. FCSL incorporates proven metal foil technology to produce the ultimate in a current sense resistor. FCSL features the effective combination of very low and stable TCRs (Temperature Coefficient of Resistance) available in a wide selection of very low ohmic values. Power ratings up to 5 Watts makes FCSL the ideal choice for your current sensing applications.

Series	Power Rating	Resistance Range	Tol.	TCR (ppm/°C)	Dim. (in.±.008/*mm ±0.20*) L	W	t
FCSL64	2.0W	1mΩ	±5%	±150	0.122/*3.1*	0.248/*6.3*	0.047/*1.2*
		2mΩ	±2%	±100			0.020/*0.5*
		3mΩ ~ 100mΩ	±1%	±50			0.020/*0.5*
FCSL76	3.0W	1mΩ	±5%	±150	0.15/*3.8*	0.3/*7.6*	0.053/*1.35*
		2mΩ	±2%	±100			0.024/*0.6*
		3mΩ ~ 100mΩ	±1%	±50			0.024/*0.6*
FCSL90	4.0W	1mΩ	±5%	±150	0.177/*4.5*	0.35/*8.9*	0.063/*1.6*
		2mΩ	±2%	±100			0.028/*0.7*
		3mΩ ~ 100mΩ	±1%	±50			0.028/*0.7*
FCSL110	5.0W	1mΩ	±5%	±150	0.197/*5.0*	0.43/*11.0*	0.071/*1.8*
		2mΩ	±2%	±100			0.031/*0.8*
		3mΩ ~ 100mΩ	±1%	±50			0.031/*0.8*

FEATURES

- Foil Construction ensures a very stable TCR (Temperature Coefficient of Resistance)
- Designed for automatic insertion
- Industry standard sizes
- High heat resistant use
- Low heat electromotive use
- Color: white (top) and green (bottom)

DERATING

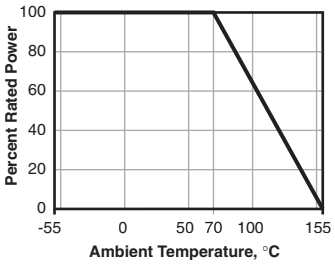

PERFORMANCE CHARACTERISTICS

Test	Condition	Maximum ΔR
Max. temperature for rated power	70°C	
Operating temperature range	-55°C ~ +155°C	
Rated voltage	√(Rated power x Resistance value) V	
In-rush current*	Rated current 10 msec ON, 60 sec OFF, 10 cycles* **(see table below)**	±(1.0% +0.0005Ω)
Rapid change of temperature	-55°C (30min.)/+155°C (30min.), 100 cycles	±(1.0% +0.0005Ω)
Solderability	245°C ±5°C for 3 ±0.5 sec.	Min. 90% coverage
Endurance at 70°C	70°C ±3°C, Rated voltage 1.5h ON, 0.5h OFF, 1000h	±(1.0% +0.0005Ω)
Resistance to soldering heat	260°C ±5°C for 10 ±1 sec.	±(0.5% +0.0005Ω)
Moisture resistance	60°C ±2°C, 90~95% RH, Rated voltage 1.5h ON, 0.5h OFF, 1000h	±(2.0% +0.0005Ω)

LAND PATTERN

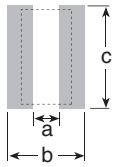

(mm)	Value range	a	b	c
FCSL64	1mΩ	0.9	4.2	6.6
	2mΩ~100mΩ	2.2	4.2	6.6
FCSL76	1mΩ	1.1	4.6	7.8
	2mΩ~100mΩ	2.6	4.6	7.8
FCSL90	1mΩ	1.3	5.1	9.2
	2mΩ~100mΩ	3.1	5.1	9.2
FCSL110	1mΩ	1.5	5.6	11.2
	2mΩ~100mΩ	3.6	5.6	11.2

*In-rush Current

		1mΩ~10mΩ		12mΩ~100mΩ	
Series	**Rated Wattage**	**In-rush Power**	**Continuous Current**	**In-rush Power**	**Continuous Current**
FCSL64	2W	225W	125A	150W	70A
FCSL76	3W	325W	150A	210W	80A
FCSL90	4W	440W	180A	300W	100A
FCSL110	5W	600W	240A	440W	120A

In-rush current = √(in-rush power/resistance value), or max. current, whichever is smaller

ORDERING INFORMATION

RoHS Compliant

F C S L 6 4 R 0 0 5 J E R

- **Series**
- **Package Size**: 64=6432=2W; 76=7638=3W; 90=9045=4W; 110=11050=5W
- **Ohms**: R005 = 0.005Ω; R050 = 0.050Ω
- **Tolerance**: J = 5%; G = 2%; F = 1%
- **Taping Code**: R = 1,000 pc/reel

STANDARD VALUES

Ohms	2 Watts	3 Watts	4 Watts	5 Watts	Tolerance	TCR
0.0010	FCSL64R001JE	FCSL76R001JE	FCSL90R001JE	FCSL110R001JER	±5%	±150ppm/°C
0.0020	FCSL64R002GE	FCSL76R002GE	FCSL90R002GE	FCSL110R002GER	±2%	±100ppm/°C
0.0050	FCSL64R005FE	FCSL76R005FE	FCSL90R005FE	FCSL110R005FER	±1%	±50ppm/°C
0.0100	FCSL64R010FE	FCSL76R010FE	FCSL90R010FE	FCSL110R010FER	±1%	±50ppm/°C
0.0250	FCSL64R025FE	FCSL76R025FE	FCSL90R025FE	FCSL110R025FER	±1%	±50ppm/°C
0.0500	FCSL64R050FE	FCSL76R050FE	FCSL90R050FE	FCSL110R050FER	±1%	±50ppm/°C

PACKAGING SPECIFICATIONS

TAPE inches *(mm)*

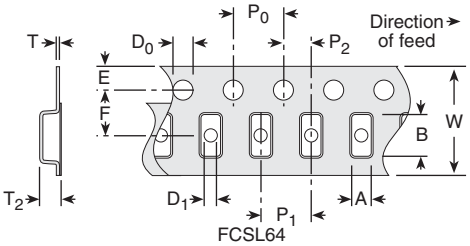

FCSL64

A	0.135 *(3.43 ±0.2)*
B	0.261 *(6.63 ±0.2)*
W	0.472 *(12.0 ±0.3)*
E	0.069 *(1.75 ±0.1)*
F	0.217 *(5.5 ±0.05)*
P_0	0.157 *(4.0 ±0.1)*
P_1	0.157 *(4.0 ±0.1)*
P_2	0.079 *(2.0 ±0.05)*
D_0	0.059 *(1.5 +0.1/-0)*
D_1	0.059 *(1.5 +0.2/-0)*
T	0.008 *(0.2 ±0.05)*
T_2	0.059 *(1.5 max.)*

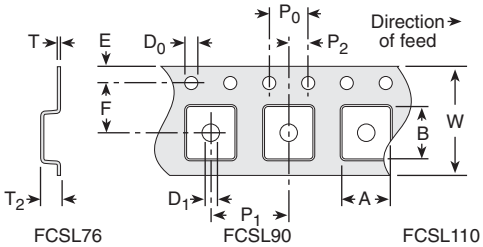

	FCSL76	FCSL90	FCSL110
A	0.196 *(4.98 ±0.1)*	0.187 *(4.75 ±0.1)*	0.211 *(5.36 ±0.1)*
B	0.310 *(7.88 ±0.1)*	0.372 *(9.45 ±0.1)*	0.463 *(11.74 ±0 1)*
W	0.630 *(16.0 +0.3/-0.1)*	0.630 *(16.0 +0.3/-0.1)*	0.945 *(24.0 +0.3/-0.1)*
E	0.069 *(1.75 ±0.1)*	0.069 *(1.75 ±0.1)*	0.069 *(1.75 ±0.1)*
F	0.295 *(7.5 ±0.05)*	0.295 *(7.5 ±0.1)*	0.453 *(11.50 ±0.1)*
P_0	0.157 *(4.0 ±0.1)*	0.157 *(4.0 ±0.1)*	0.157 *(4.0 ±0.1)*
P_1	0.315 *(8.0 ±0.1)*	0.315 *(8.0 ±0.1)*	0.315 *(8.0 ±0.1)*
P_2	0.185 *(2.0 ±0.1)*	0.185 *(2.0 ±0.1)*	0.185 *(2.0 ±0.1)*
D_0	0.059 *(1.5 +0.1/-0)*	0.059 *(1.5 +0.1/-0)*	0.059 *(1.5 +0.1/-0)*
D_1	0.059 *(1.5 +0.25/-0)*	0.059 *(1.5 +0.1/-0)*	0.059 *(1.5 +0.25/-0)*
T	0.012 *(0.305 ±0.2)*	0.008 *(0.32 ±0.05)*	0.013 *(0.33 ±0.02)*
T_2	0.037 *(0.93 ±0.1)*	0.074 *(1.89 ±0.1)*	0.077 *(1.96 ±0.1)*

REEL inches *(mm)*

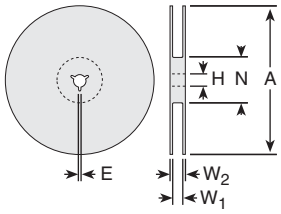

	FCSL64	FCSL76/90	FCSL110
A	7.087 *(180 +0/-3)*	7.087 *(180 +0/-3)*	12.992 *(330 ±2.0)*
H	0.512 *(13 ±0.2)*	0.512 *(13 ±0.2)*	0.512 *(13 ±0.2)*
E	0.079 *(2.0 ±0.5)*	0.079 *(2.0 ±0.5)*	0.079 *(2.0 ±0.5)*
N	0.236 *(60 +1/-0)*	0.236 *(60 +1/-0)*	3.937 *(100 ±1.0)*
W_1	0.518 *(13.0 ±0.3)*	0.669 *(17.0 ±0.3)*	1.000 *(25.4 ±1.0)*
W_2	0.669 *(17.0 ±1.4)*	0.764 *(19.4 ±1.0)*	1.157 *(29.4 ±1.0)*

MCS Series

Metal Element Current Sense Resistive Metal Alloy mOhm Technology, SMD

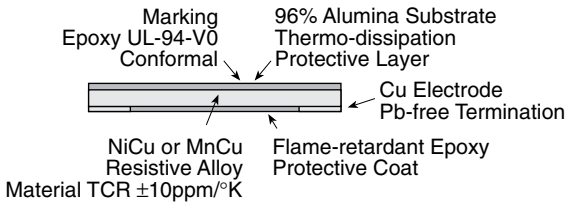

Series	Power Rating (@70°C)	Resistance TCR (ppm/°C) 5mΩ	10mΩ	15mΩ	20mΩ	25mΩ	30mΩ	40mΩ	50mΩ
MCS1632	1W	<200	<70	<40	<40	<40	<40	<40	<40
MCS3264	2W	<200	<70	<40	<40	<40	<40	<40	<40

FEATURES

- NiCu or MnCu resistive alloy; material TCR ±10ppm/°K
- Marking epoxy UL-94-V0 conformal
- 96% alumina substrate thermo dissipation protective layer
- Cu terminal electrode Pb-free termination
- Flame-retardant epoxy protective coat (UL-94-V0)
- Ultra low resistance value (0.005Ω ~ 0.050Ω)
- Precision resistance alloy (NiCr20AlSi, or CuMnNi); material selected for low TCR (<50ppm/°C)
- Superior temperature coefficient characteristics; resistance vs. temp. change from 25°C to 125°C within 10ppm/°C ~ 50ppm/°C
- Low inductance, low thermo EMF (<50μV/°C)

APPLICATIONS

- Industrial electronics, power electronics: power supply, DC/DC converter, AC/DC converter, motor controller, automotive electronics
- Battery charger, PC, PDA, 3C products, Telecommunications, instruments, white goods

SPECIFICATIONS

Resistance Range: 0.005Ω - 0.05Ω

Color: white (top) / green (bottom)

Power: 1 and 2 watts at 70°C

Standard resistance values (mΩ): 5, 10, 15, 20, 25, 30, 35, 50

TCR: ±50ppm/°C (two standard series of temperatures: 25°C, 0°C, -15°C, -55°C and 25°C, 50°C, 75°C, 125°C, 150°C; temp. tolerance ±3°C; TCR = $(R2-R1)/R1(T2-T1)x10^6$)

Tolerance: 1%, 3%, 5%

Rated voltage: $(PxR)^{1/2}$

DIMENSIONS (in./mm±0.02)

Size	L	W	a	N	L_2	O	Solder Thickness (μm/w)
MCS1632	0.126/3.20	0.063/1.60	0.020/0.50	0.059/1.50	0.039/1.00	0.079/2.00	35/0.5, 105/1.0
MCS3264	0.252/6.40	0.126/3.20	0.040/1.00	0.079/2.00	0.165/4.20	0.150/3.80	35/1.0, 105/2.0

PACKAGING (in./mm)

Size	Tape width ±0.30mm	Reel diam. ±0.50mm	Pc/Reel	Weight (g ±10)	Part. no.
MCS1632	0.315/8.00	7.00/178.0	5000	131	T5
MCS3264	0.472/12.00	7.00/178.0	4000	291	T4

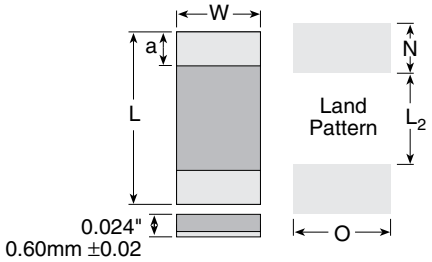

DERATING

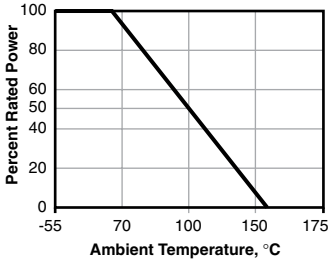

PERFORMANCE CHARACTERISTICS

Test	Condition	Maximum ΔR
Short Time Overload	JIS C 5201 4.13; Overload voltage 2.5x rated voltage for 5 sec.	±(0.5% +0.0005Ω)
High Temp. Exposure	JIS C 5202 7.11; Test chamber 155 ±3°C for 1000 +48/-0 hours	±(0.5% +0.0005Ω)
Low Temp. Storage	JIS C 5202 7.1; Test chamber -55 ±3°C for 96 ±4 hours	±(0.5% +0.0005Ω)
Endurance under Damp and Load	JIS C 5202 7.9; Temp. 60 ±2°C, relative humidity 90-95%, rated DC voltage applied 90 min. on, 30 min. off for 1000 +48/-0 hours	±(0.5% +0.0005Ω)
Thermal Shock	JIS C 5202 7.4; -55 ±3°C for 30 min. to room temp for 2-3 min. to +150 ±2°C for 30 min. to room temp for 2-3 min., 100 cycles	±(0.5% +0.0005Ω)
Load Life	JIS C 5202 7.10; Temp. 70 ±2°C, rated DC voltage applied 90 min. on, 30 min. off for 1000 +48/-0 hours	±(1% +0.0005Ω)
Solderability	JIS C 5202 6.5; Solder temp. 235 ±5°C, 2 ±0.5 sec. immersion	New solder min. 90% of terminal
Resistance to Solder Heat	JIS C 5202 6.4; Solder temp. 260 ±5°C, 10 ±1 sec. immersion	±(0.5% +0.0005Ω)
Mechanical Shock	JIS C 5202 6.2; Load 10N (1.02kgf) for 10 ±1 sec., middle of specimen pressurized	±(0.5% +0.0005Ω)
Insulation Resistance	JIS C 5202 5.6; DC 100 ±15V for 1 min.	$>10^2$MΩ

STANDARD VALUES

Part Number	Power Rating	Ohm Value	Qty./ Reel	Part Number	Power Rating	Ohm Value	Qty./ Reel
MCS1632R010FER	1W	0.01Ω	5000	MCS3264R005FER	2W	0.005Ω	4000
MCS1632R015FER	1W	0.015Ω	5000	MCS3264R010FER	2W	0.01Ω	4000
MCS1632R020FER	1W	0.02Ω	5000	MCS3264R015FER	2W	0.015Ω	4000
MCS1632R025FER	1W	0.025Ω	5000	MCS3264R020FER	2W	0.02Ω	4000
MCS1632R050FER	1W	0.05Ω	5000	MCS3264R025FER	2W	0.025Ω	4000
				MCS3264R050FER	2W	0.05Ω	4000

ORDERING INFORMATION

RoHS Compliant

M C S 1 6 3 2 R 0 0 5 F E R

Series	Case Size	Ohms	Tolerance	Taping Code
Metal Alloy Current Sense	1632 = 1w 3264 = 2w	R005 = 0.005Ω	F = 1%	1632 = 5,000 pc/reel 3264 = 4,000 pc/reel

Check product availability at **www.ohmite.com**

Mini Macro Chip Series

High Voltage Thick Film SMD Chip

FEATURES

- High Voltage Ratings
- Smaller Package Sizes
- Low Cost
- Wraparound Terminals

SPECIFICATIONS

Prefered Number Series for Resistors:
±1%, 2%: E96, E24
±5%, 10%: E24

Material
Substrate: Alumina
Resistor: Thick Film
Coating: glass overcoat
Terminal: 100% nickel barrier inner layer with 100% matte tin outer layer

Electrical
Tolerance: 1-10%
Derating: Linearly from 100% at 70°C to 0% at 125°C
Isolation Voltage: 500V (ex. MMC06: 100V)
Oper. Temp. Range: -55°~+125°

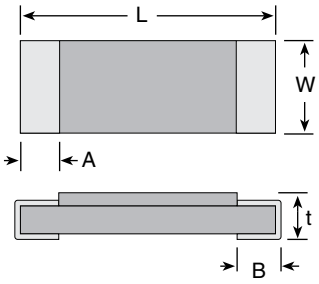

Series (Size in./met.)	Resistance Range	TCR 10^{-6}/°C	Power Rating (W) @70°C	Voltage Rating*	Isolation Voltage	L	W	t	A	B	Qty./ Reel
						Dimensions (in./*mm*)					
MMC06 (0603/1608)	470Ω~10MΩ	±100	0.1	200	100	0.063 ±.004 *1.6 ±0.1*	0.031 ±.006 *0.8 ±0.15*	0.018 ±.004 *0.45 ±0.1*	0.012 ±.004 *0.3 ±0.1*	0.012 ±.004 *0.3 ±0.1*	5000
	47Ω~464Ω	±200									
MMC08 (0805/2012)	100Ω~10MΩ ±1% & ±2%	±100	0.125	300	500	0.079 ±.004 *2.0 ±0.1*	0.049 ±.004 *1.25 ±0.10*	0.022 ±.004 *0.55 ±0.1*	0.016 ±.008 *0.4 ±0.2*	0.016 ±.008 *0.4 ±0.2*	5000
	100Ω~51MΩ ±5% & ±10%										
	47Ω~97.6Ω	±200									
MMC12 (1206/3216)	100Ω~10MΩ ±1% & ±2%	±100	0.25	400	500	0.126 ±.004 *3.2 ±0.1*	0.063 ±.006 *1.6 ±0.15*	0.022 ±.004 *0.55 ±0.1*	0.020 ±.01 *0.5 ±0.25*	0.020 ±.01 *0.5 ±0.25*	5000
	100Ω~51MΩ ±5% & ±10%										
	47Ω~97.6Ω	±200									
MMC25 (2512/6332)	560Ω~20MΩ ±1% & ±2%	±100	1.0	800	500	0.248 ±.004 *6.3 ±0.1*	0.126 ±.006 *3.2 ±0.15*	0.022 ±.004 *0.55 ±0.1*	0.024 ±.008 *0.6 ±0.2*	0.024 ±.008 *0.6 ±0.2*	4000
	560Ω~51MΩ ±5% & ±10%										
	100Ω~549Ω	±200									
	47Ω~97.6Ω	±500~-200									

*Use Ohm's Law ($V=\sqrt{P*R}$) to calculate maximum working voltage.
Note: Limiting Element Voltage can only be applied to resistors when the resistance is equal to or higher than the critical resistance value.

DERATING

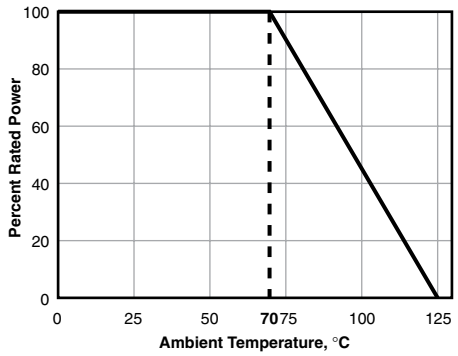

ORDERING INFORMATION

RoHS Compliant

M M C 1 2 J 4 7 0 4 E T P

Type

Wattage
06 = 0.1
08 = 0.125
12 = 0.25
25 = 1.0

Tolerance
F = 1%
G = 2%
J = 5%
K = 10%

Resistance
First 3 digits are significant; 4th digit is multiplier (# of zeroes to follow).
Examples:
4704 = 4,700,000
1214 = 1,210,000
Use E96 values for 1%
Use E24 values for 5%

Packaging
TP = Paper tape (use on MMC06, MMC08, MMC12)
TR = Embossed tape (use on MMC25)

Note: Units are marked with 3-digit (E24 Series) or 4-digit (E96 Series). 4-digit marking not available on MMC06 sizes.

LAND PATTERN (in.)

Land pattern dimensions are for reference only

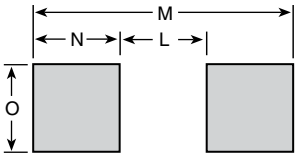

Size	M	N	O	L
MMC06	0.075	0.024	0.041	0.027
MMC08	0.095	0.032	0.069	0.031
MMC12	0.146	0.040	0.080	0.066
MMC25	0.272	0.048	0.150	0.176

Macrochip Series

High Voltage/High Resistance Precision Thick Film Surface Mount

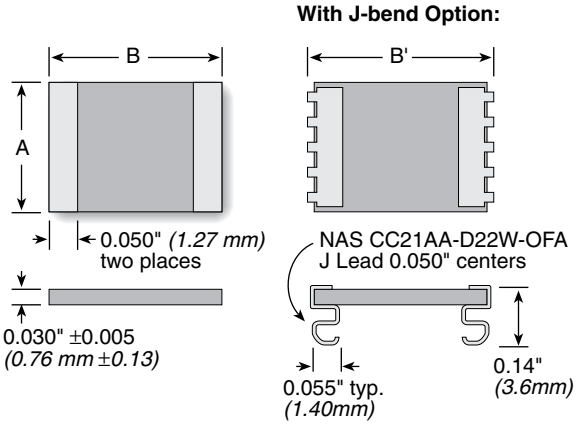

Ohmite's MacroChip resistors bring precision high voltage capabilities to surface mount applications. Designed with thick film on alumina substrate technology, the resistors can be provided in precision tolerances, high voltage ratings, and high resistance values. The planar package design is low profile for easy use with instrumentation, medical equipment, voltage regulators, and power supplies.

FEATURES

- Non-inductive design (less than 50 nanohenries)
- Low voltage coefficient
- Surface mount
- Pd Ag terminations
- J-bend terminals for applications involving shock and vibration

APPLICATIONS

- Medical instrumentation
- Power Supplies
- Avionics
- Light Magnification Systems

SPECIFICATIONS

Material

Resistor: Thick film on Alumina

Electrical

Resistance Range: 100 Ohms to 5,000M

Power Rating: 0.75W to 3.25W

Voltage Rating: 2.0KV to 10.0KV

Tolerance: 0.5% to 20%

Operating Temperature: -55°C to +180°C

TCR and **VCR:** see Slim Mox, page 70

Note: Silver solder is recommended for Macrochip resistors. Leaching of the silver in the termination will occur if non-silver solder is used. 60/40 tin-lead solders are not recommended for use with the Macrochip product.

Ohmite Series	Resistance Range (Ohms)	Power @25°C	Voltage Rating	Dimensions (in./*mm*) A ±.01"	B ±.01"	B' max. (J-bend)	Standard Temperature Coefficient 50PPM/°C	100PPM/°C	Qty./Reel w/J-bend	w/o J-bend
MC101	100Ω to 1,000M	0.75W	2.0KV	0.25" *(6.35)*	0.25" *(6.35)*	0.29" *(7.37)*	100Ω-100M	101M-1,000M	1000	2500
MC102	200Ω to 5,000M	1.50W	5.0KV	0.25" (6.35)	0.50" (12.70)	0.54" (13.72)	200Ω-250M	251M-5,000M	1000	2500
MC103	250Ω to 5,000M	2.00W	7.5KV	0.25" (6.35)	0.75" (19.05)	0.79" (20.07)	250Ω-100M	101M-5,000M	1000	2500
MC104	1K to 5,000M	2.50W	10.0KV	0.25" (6.35)	1.00" (25.40)	1.04" (26.42)	500Ω-450M	451M-5,000M		
MC202	500Ω to 5,000M	2.50W	5.0KV	0.50" (12.70)	0.50" (12.70)		500Ω-200M	201M-5,000M		
MC204	1K to 5,000M	3.25W	10.0KV	0.50" (12.70)	1.00" (25.40)		1K-375M	376M-5,000M		

Contact Ohmite for custom configurations.

LAND PATTERN (in.)

Land pattern dimensions are for reference only.

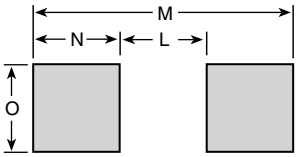

Size	M	N	O	L
MC101	0.280	0.080	0.278	0.120
MC102	0.530	0.080	0.278	0.370
MC103	0.780	0.080	0.278	0.620
MC104	1.030	0.080	0.278	0.870
MC202	0.530	0.080	0.556	0.370
MC204	1.030	0.080	0.556	0.870

ORDERING INFORMATION

Coating 2 = Blue silicone

E = RoHS compliant

Tape and Reel *optional*

M C 1 0 2 8 2 1 0 0 6 J E R

Macro Chip Series

Style 101, 102, 104, 104, 202, 204

Terminal 8 = No term. 5 = J-bend

Ohms First 3 digits are significant; 4th digit is multiplier (# of zeroes to follow). Examples: 10R2 = 10.2 ohms, 1000 = 100 ohms, 1503 = 150,000 ohms

Tolerance D = 0.5%, F = 1%, G = 2%, J = 5%, K = 10%, M = 15%, P = 20%

Check product availability at **www.ohmite.com**

PERFORMANCE DATA

Characteristic	Test Method	Specification
Humidity	MIL-STD-202, Method 103B, Condition B	±0.25%
Dielectric Withstanding Voltage	MIL-STD-202, Method 301, 750V	±0.25%
Insulation Resistance	MIL-STD-202, Method 302, Condition A or B	>10,000M or greater dry
Thermal Shock	MIL-STD-202, Method 107G, Condition B, B-1, or F	±0.20%
Load Life	MIL-STD-202, Method 108A, Condition D	±1.0%
Resistance to Solvents	MIL-STD-202, Method 215G	No degradation of coating or marking
Shock (Specified Pulse)	MIL-STD-202, Method 213B, Condition I	±0.25%
Vibration, High Frequency	MIL-STD-202, Method 204D, Condition D	±.020%
Power Conditioning	MIL-R-49462A, Par 4.8	±0.50%

STANDARD PART NUMBERS FOR MACROCHIP

Series	MC10282	Series	MC10282	Series	MC10282
Tolerance	5%	Tolerance	5%	Tolerance	5%
Watts	1W	Watts	1W	Watts	1W
Ohms		**Ohms**		**Ohms**	
1K	MC102821001JE	50K	MC102825002JE	1.25M	MC102821254JE
2.5K	MC102822501JE	75K	MC102827502JE	1.5M	MC102821504JE
5K	MC102825001JE	100K	MC102821003JE	1.75M	MC102821754JE
7.5K	MC102827501JE	125K	MC102821253JE	2M	MC102822004JE
10K	MC102821002JE	150K	MC102821503JE	2.5M	MC102822504JE
12.5K	MC102821252JE	200K	MC102822003JE	5M	MC102825004JE
15K	MC102821502JE	250K	MC102822503JE	10M	MC102821005JE
17.5K	MC102821752JE	500K	MC102825003JE	25M	MC102822505JE
20K	MC102822002JE	750K	MC102827503JE	50M	MC102825005JE
25K	MC102822502JE	1M	MC102821004JE		

1-866-9-OHMITE • Int'l 1-847-258-0300 • Fax 1-847-574-7522 • www.ohmite.com • info@ohmite.com

60S Series

Surface Mount Metal Plate Current Sense

FEATURES

- Superior thermal expansion cycling
- Inductance less than 10 nano-henries
- Flameproof
- Solderable pads: Tin (Sn) plate
- Lead flexible for thermal expansion
- Low termination stress ("J" terminals)
- Shape provides cooler operation
- Custom values available

APPLICATIONS

- Current sensing
- Low inductance
- AC applications (contact Ohmite)
- Feedback

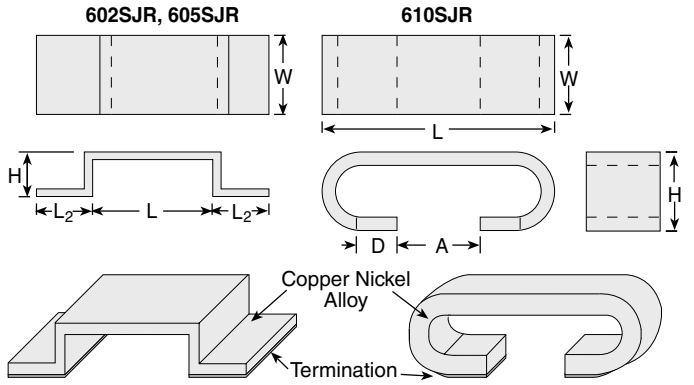

DERATING

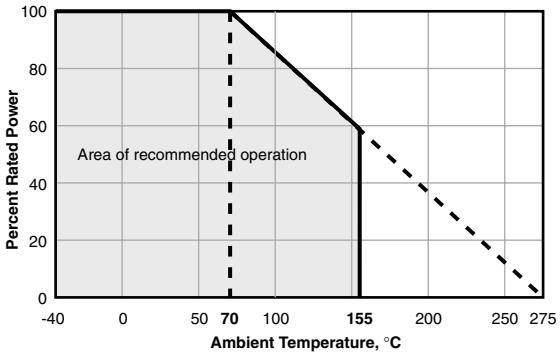

Type	Tol.	TCR (ppm/C°)	Power Rating (watts)	Resistance Values (Ω)	Rated Ambient Temp. (°C)	Operating Temp. Range (°C)	Qty./ Reel
602SJR	±5%	±100	0.25	0.003, 0.005	+70°C	-40 - +155	2000
605SJR	±5%	±100	0.5	0.002, 0.0375, 0.005, 0.008	+70°C	-40 - +155	2000
610SJR	±5%	±350	1	0.002, 0.003	+85°C	-40 - +155	1500

PERFORMANCE CHARACTERISTICS

Parameter	Requirement	Test Method (JIS C 5202)
Resistance	Within regulated tolerance	25°C
T.C.R.	Within specified T.C.R.	Room temperature/100°C up
Resistance to Solder Heat	±2.0%	350°C ± 10°C, 3 seconds
Solderability	95% coverage minimum	235°C ± 5°C, 5 seconds
Moisture Resistance	±3.0%	40°C, 90 - 95% RH, 1000 hours, no load
Moisture Resistance	±5.0%	Power rating x 1/10, 40°C, 90 - 95% RH, 1000 hours, 1.5 hr ON, 0.5 hr OFF cycle
Load Life	±5.0%	Rating voltage, 1000 hours, 1.5 hr ON, 0.5 hr OFF cycle

DIMENSIONS inches *(mm)*

	L	L2	H	W
602SJR	0.39 ± .008 *(10.0 ± 0.2)*	0.018 ± .008 *(2 ± 0.2)*	0.024 *(0.6 ± 0.1)*	0.118 ± .008 *(3.0 ± 0.2)*
605SJR	0.39 ± .008 *(10.0 ± 0.2)*	0.018 ± .008 *(2 ± 0.2)*	0.079 *(2 max.)*	0.20 ± .008 *(5.2 ± 0.2)*

	L	H	D	A	W
610SJR	0.44 ± .016 *(11.2 ± 0.4)*	0.137 ± .016 *(3.5 ± 0.4)*	0.095 ± .010 *(2.35 ± 0.25)*	0.189 ± .030 *(4.8 ± .75)*	0.126 ± .016 *(3.2 ± 0.40)*

ORDERING INFORMATION

RoHS Compliant

602SJR00300E-T

- **Type & Power Rating**: 602S = 0.25 watt; 605S = 0.5 watt; 610S = 1 watt
- **Tolerance**: J = 5%
- **Ohms**: R00200 = 0.00200Ω; R00300 = 0.00300Ω; R00375 = 0.00375Ω
- **Packaging**: T = tape and reel (optional)

STANDARD PART NUMBERS FOR 60S SERIES

	Wattage:	0.25 watt	0.5 watt	1 watt
Ohms	**Series:**	602SJR	605SJR	610SJR
0.00200Ω			605SJR00200E-T	610SJR00200E-T
0.00300Ω		602SJR00300E-T		610SJR00300E-T
0.00375Ω			605SJR00375E-T	
0.00500Ω		602SJR00500E-T	605SJR00500E-T	
0.00800Ω			605SJR00800E-T	

Check product availability at **www.ohmite.com**

Check product availability using the Worldwide Inventory Search at ohmite.com

(continued)

60S Series

Surface Mount
Metal Plate Current Sense
(continued)

PACKAGING SPECIFICATIONS

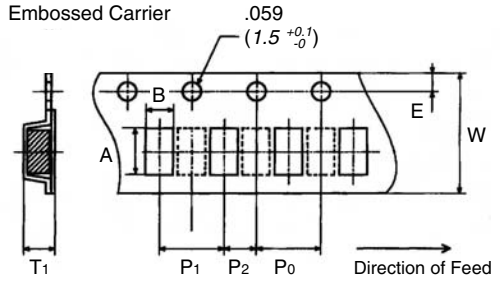

TAPE inches *(mm)*

Type	A	B	E	W	P0	P1	P2	T1
602SJR	0.057 *(1.45 ± 0.2)*	0.134 *(3.4 ± 0.2)*	0.069 *(1.75 ± 0.1)*	0.079 *(2.0)*	0.157 *(4.0 ± 0.1)*	0.315 *(8.0 ± 0.1)*	0.079 *(2.0)*	0.098 *(2.5 ± 0.2)*
605SJR	0.057 *(1.45 ± 0.2)*	0.224 *(5.7 ± 0.2)*	0.069 *(1.75 ± 0.1)*	0.079 *(2.0)*	0.157 *(4.0 ± 0.1)*	0.315 *(8.0 ± 0.1)*	0.079 *(2.0)*	0.091 *(2.3 ± 0.2)*
610SJR	0.461 *(11.7 ± 0.1)*	0.169 *(4.3 ± 0.1)*	0.069 *(1.75 ± 0.1)*	0.945 *(24.0 ± 0.2)*	0.157 *(4.0 ± 0.1)*	0.315 *(8.0 ± 0.1)*	0.079 *(2.0)*	___ ___

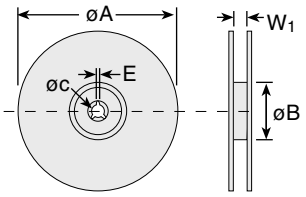

REEL inches *(mm)*

Type	A	B	C	E	W1	qty./reel
602SJR 605SJR	10.0 *(255 +0.0 -3.0)*	3.15 *(80 +1.0 -0)*	0.511 *(13.0 ±0.2)*	0.079 *(2.0 ±0.5)*	1.0 *(25.5 ± 2.0)*	2000
610SJR	12.99 *(330 ± 2.0)*	3.94 *(100 ± 2.0)*	0.511 *(13.0 ± 0.2)*	0.079 *(2.0 ± 0.5)*	1.0 *(25.5 ± 2.0)*	1500

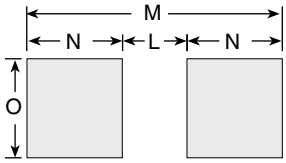

LAND PATTERN inches *(mm)*

Type	M	N	O	L
602SJR	0.622 *(16.0)*	0.118 *(3.0)*	0.150 *(3.8)*	0.394 *(10.0)*
605SJR	0.622 *(16.0)*	0.118 *(3.0)*	0.236 (6.0)	0.394 *(10.0)*
610SJR	0.369 *(9.36)*	0.121 *(3.07)*	0.142 *(3.60)*	0.127 *(3.22)*

Land pattern dimensions are for reference only

MC1RD Series

SMT-MOX Divider

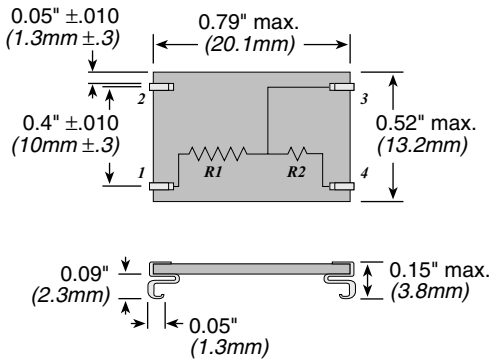

FEATURES

- Contact Ohmite for custom configurations.

A complete description of the SLIM-MOX Divider is required.
EXAMPLE:
R_T = 500MΩ 5%
R_1 = 499.5MΩ 5%
R_2 = 500KΩ 1%
Ratio = R_T / R_2 = 1,000: 1, 1%
To specify Slim-Mox Dividers, please see our website at:
www.ohmite.com/dividers

SPECIFICATIONS

Material
Terminal: "J" terminal 0.018" wide tin-plated copper
Resistor: Thick film on Alumina

Electrical
Resistance range: 1MΩ-5,000MΩ
Max. working voltage: 5KV
Wattage: 1.5W
Maximum ratio: 5,000:1
Ratio TCR: 100ppm; 25ppm and 10ppm available
Ratio tolerances: 0.5% to 5%

Surface Mount Power

RC Series: carbon composition (1/4 & 1/2 watt)
RC Series: ceramic composition (above 1/2 watt)
RF Series: metal film
RW Series: wirewound
RP Series: power film
RM Series: high voltage thick film

FEATURES

- Tolerance 1%, 5%, 10%, depending on construction
- Twelve wattage ratings
- Seven package sizes
- Two mounting designs to accommodate your soldering process
- Five power resistor technologies to optimize your operating performance:
  1. Carbon and Ceramic composition for surge and low inductance
  2. Metal film for high ohmic value and low T.C.
  3. Wire element for inrush current combined with low ohmic values. Resistance values as low as 0.005Ω
  4. Power film for high ohmic value and high wattage
  5. High Voltage thick film for high voltage applications
- Flexible J-bend terminations
- Working Temperature Range: -55°C to +150°C

DERATING

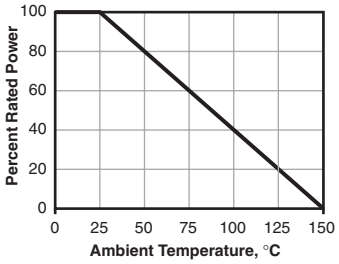

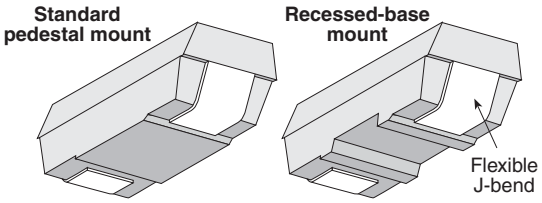

Series*	Wattage	Ohms	Dimensions (in. / *mm*) Length	Height	Width	Voltage
RC0S2CA	0.25	2.2–5.6M	0.394 / *10.01*	0.159 / *4.04*	0.159 / *4.04*	250
RC0R5DB	0.50	2.2–20M	0.625 / *15.88*	0.226 / *5.74*	0.273 / *6.93*	350
RW0S6BB	0.6	0.010-1K	0.202 / *5.14*	0.135 / *3.42*	0.1 / *2.54*	50
RF0S8BA	0.80	1.0–10M	0.246 / *6.25*	0.136 / *3.45*	0.136 / *3.45*	200
RW1S0BA	1.00	0.005–1K	0.246 / *6.25*	0.136 / *3.45*	0.136 / *3.45*	50
RF1S0CA	1.00	1.0–10M	0.394 / *10.01*	0.159 / *4.04*	0.159 / *4.04*	350
RC1R0EA	1.00	3.3–100K	0.811 / *20.60*	0.273 / *6.93*	0.273 / *6.93*	500
RP1S3CA	1.25	1.0–1M	0.394 / *10.01*	0.159 / *4.04*	0.159 / *4.04*	350
RW1S5CA	1.50	0.005–1.5K	0.394 / *10.01*	0.159 / *4.04*	0.159 / *4.04*	75
RP1S5CB	1.50	1.0–1M	0.407 / *10.34*	0.222 / *5.64*	0.226 / *5.74*	350
RP1R5CB	1.50	1.0–1M	0.407 / *10.34*	0.222 / *5.64*	0.226 / *5.74*	350
RW2S0CB	2.00	0.005–5K	0.407 / *10.34*	0.222 / *5.64*	0.226 / *5.74*	100
RW2R0CB	2.00	0.005–5K	0.407 / *10.34*	0.222 / *5.64*	0.226 / *5.74*	100
RP2S0DA	2.00	1.0–1M	0.455 / *11.56*	0.226 / *5.74*	0.24 / *6.10*	500
RP2R0DA	2.00	1.0–1M	0.455 / *11.56*	0.226 / *5.74*	0.24 / *6.10*	500
RW2S0DA	2.00	0.005–5K	0.455 / *11.56*	0.226 / *5.74*	0.24 / *6.10*	100
RW2R0DA	2.00	0.005–5K	0.455 / *11.56*	0.226 / *5.74*	0.24 / *6.10*	100
RP2R5DB	2.50	1.0–1M	0.655 / *16.64*	0.226 / *5.74*	0.273 / *6.93*	500
RW3R0DB	3.00	0.005–13K	0.625 / *15.88*	0.226 / *5.74*	0.273 / *6.93*	200
RP3R0EA	3.00	1.0–1M	0.811 / *20.60*	0.273 / *6.93*	0.273 / *6.93*	750
RW3R5EA	3.50	0.005–25K	0.811 / *20.60*	0.273 / *6.93*	0.273 / *6.93*	350

Military grade versions available; contact Ohmite.
*Last two digits designate package size

PERFORMANCE SPECIFICATIONS

Part Number	Power (watts)*	Maximum voltage	Resistance range 1% tol.	5% tol.	10% tol.	Temp. Coefficient 0.1Ω–1Ω	1Ω–10Ω	10Ω+	Dielectric Withstanding	Tape Size 13" reels	Quantity per reel
RC0S2CA———	0.25	250	—	—	2.2Ω–5.6M	—	±400	±400	1000V	16mm	1500
RC0R5DB———	0.50	350	—	—	2.2Ω–20M	—	±400	±400	1000V	24mm	1000
RW0S6BB———	0.6	50	0.010Ω–1K	0.005Ω–1K		±90	±50	±20	1000V	12mm	2500
RF0S8BA———	0.8	200	1Ω–5M	—		—	±100	±100	1000V	12mm	2000
RW1S0BA———	1.0	50	0.005Ω–1K	0.005Ω–1K		±90	±50	±20	1000V	12mm	2000
RF1S0CA———	1.0	350	10Ω–1M	1Ω–10M		—	±200	±100	1000V	16mm	1500
RC1R0EA———	1.0	500	3.3-100K(10% tol only)					-1300	1000V	32mm	750
RP1S3CA———	1.25	350	—	1Ω–1M		—	±250	±250	1000V	16mm	1500
RP1S5CA———	1.5	75	0.005Ω–1.5K	0.005Ω–1.5K		±90	±250	±250	1000V	16mm	1500
RP1S5CB——— RP1R5CB———	1.5	350	—	1Ω–1M		—	±250	±250	1000V	16mm	1000
RW2S0CB——— RW2R0CB———	2.0	100	0.005Ω–5K	0.005Ω–5K		±90	±50	±20	1000V	16mm	1000
RP2S0DA——— RP2R0DA———	2.0	500	—	1Ω–1M		—	±250	±250	1000V	24mm	1000
RW2S0DA——— RW2R0DA———	2.0	100	0.005Ω–5K	0.005Ω–5K		±90	±50	±20	1000V	24mm	1000
RP2R5DB———	2.5	500	—	1Ω–1M		—	±250	±250	1000V	24mm	1000
RW3R0DB———	3.0	200	0.005Ω–13K	0.005Ω–13K		±90	±50	±20	1000V	24mm	1000
RP3R0EA———	3.0	750	—	1Ω–1M		—	±250	±250	1000V	32mm	750
RW3R5EA———	3.5	350	0.005Ω–25K	0.005Ω–25K		±90	±50	±20	1000V	32mm	750
RM0R7EA———	0.75	2500	1KΩ–1000M	1KΩ–1000M		—	—	±50	1000V	32mm	750

*25°C ambient

(continued)

Surface Mount Power

(continued)

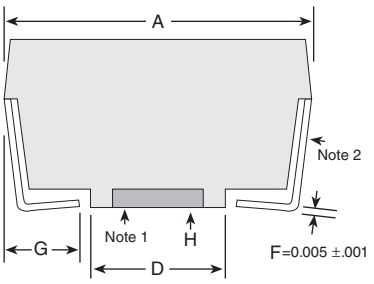

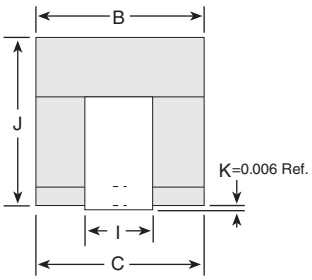

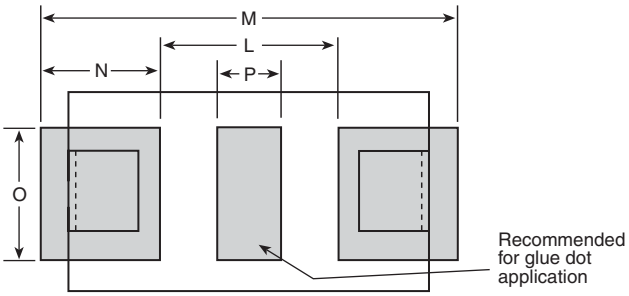

Packages		Package Outline Dimensions A	B	C	D	G	I	J	PC Board Land Pattern L	M	N	O	P
BA	(in.)	.246±.020	.136±.005	.133 REF	.110±.010	.047 Nom.	.054±.012	.136±.005	.150	.346	.098	.126	.050
	(mm)	*6.248±.508*	*3.454±.127*	*3.378 REF*	*2.794±.254*	*1.194 Nom.*	*1.372±.305*	*3.454±.127*	*3.81*	*8.79*	*2.49*	*3.20*	*1.27*
CA	(in.)	.394±.020	.159±.005	.156 REF	.220±.010	.062 Nom.	.078±.012	.159±.005	.256	.524	.134	.126	.060
	(mm)	*10.008±.508*	*4.039±.127*	*3.962 REF*	*5.588±.254*	*1.575 Nom.*	*1.981±.305*	*4.038±.127*	*6.50*	*13.31*	*3.40*	*3.20*	*1.52*
CB	(in.)	.407±.020	.226±.005	.222 REF	.260±.010	.062 Nom.	.084±.012	.222±.005	.276	.537	.131	.126	.093
	(mm)	*10.338±.508*	*5.74±.127*	*5.639 REF*	*6.604±.254*	*1.575 Nom.*	*2.134±.305*	*5.639±.127*	*7.01*	*13.64*	*3.33*	*3.20*	*2.36*
DA	(in.)	.455±.020	.240±.005	.236 REF	.260±.010	.062 Nom.	.143±.012	.226±.005	.317	.585	.134	.155	.093
	(mm)	*11.557±.508*	*6.096±.127*	*5.994 REF*	*6.604±.254*	*1.575 Nom.*	*3.632±.305*	*5.740±.127*	*8.05*	*14.86*	*3.40*	*3.94*	*2.36*
DB	(in.)	.625±.020	.273±.005	.268 REF	.417±.010	.062 Nom.	.143±.012	.226±.005	.474	.742	.134	.155	.093
	(mm)	*15.875±.508*	*6.934±.127*	*6.807 REF*	*10.592±.254*	*1.575 Nom.*	*3.632±.305*	*5.740±.127*	*12.040*	*18.85*	*3.40*	*3.94*	*2.36*
EA	(in.)	.811±.020	.273±.005	.268 REF	.572±.010	.093 Nom.	.143±.012	.273±.005	.611	1.000	.195	.155	.093
	(mm)	*20.599±.508*	*6.934±.127*	*6.807 REF*	*14.529±.254*	*2.362 Nom.*	*3.632±.305*	*6.934±.127*	*15.52*	*25.4*	*4.95*	*3.94*	*2.36*
BB	(in.)	.202±.010	.10±.010	.095 REF	.079±.010	.050 Nom.	.065±.012	.135±.005	0.078	0.328	0.125	0.126	0.026
	(mm)	*5.140±.508*	*2.54±.127*	*2.41 REF*	*2.00±.254*	*1.280 Nom.*	*1.640±.305*	*3.420±.127*	*1.98*	*8.33*	*3.18*	*3.20*	*0.66*

Note 1: Packages BA and CA are only available with a pedestal base. Packages CB and DA are available in either pedestal or recessed base. Packages DB and EA are only available in a recessed base.

Land pattern dimensions are for reference only

Note 2: Test point is .020 above PCB.

Note 3: Tape and reel dimensions per EIA 481 A except "EA" size which is 12 mm component pitch versus 16mm pitch.

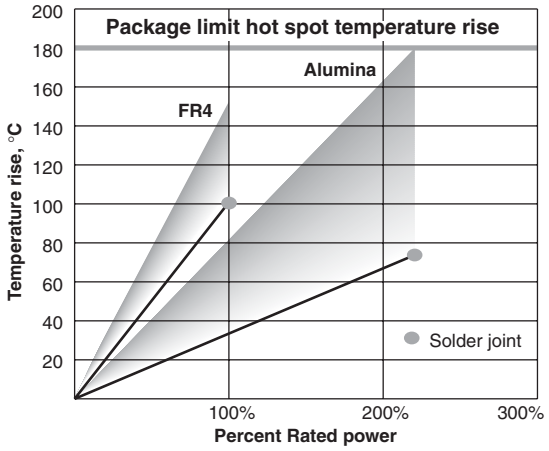

The temperature rise graph data was obtained by a selection of test substrate size and trace width for each resistor size to limit operating temperatures to safe values.

The operating temperature safe rises are either 100°C substrate temperature rise or 180°C package hot spot temperature rise at 25°C ambient.

FR4: 0.062 in. thick; 0.062 in. traces

Alumina: 0.040 in. thick; 0.010 in. traces

Molding material rated at 205°C continuous.

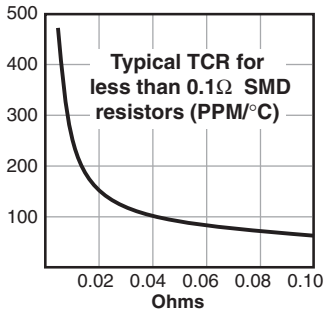

REEL DIMENSIONS

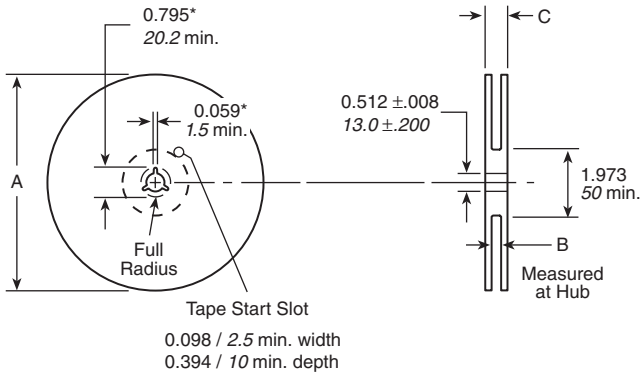

Size	A nom.	B	C max.	Quantity
12mm	13"	0.488" +0.078, –0.00	0.724"	2000 pcs. BA or
		12.4mm +2.0, –0.0	*18.4mm*	2500 pcs. BB
16mm	13"	0.646" +0.078, –0.00	0.882"	1500 pcs. CA or
		16.4mm +2.0, –0.0	*22.4mm*	1000 pcs. CB
24mm	13"	0.961" +0.078, –0.00	1.196"	1000 pcs. DA or DB
		24.4mm +2.0, –0.0	*30.4mm*	
32mm	13"	1.276" +0.078, –0.00	1.52"	750 pcs. EA
		32.4mm +2.0, –0.0	*38.4mm*	

All reels are compatible with major pick-and-place machines and made in accordance with EIA 481 A (except EA size, which is 12mm component pitch versus 16mm pitch).

(continued)

PERFORMANCE DATA

	Construction	Temp. cycle (-55°C to 125°C, 1000 cycles)	Load Life (1000 hours at 25°C)	Immersion (260°C for 10 sec.)	Momentary Overload
RC	Carbon/Ceramic Composition	±4.0%+.05Ω	±10.0%+.05Ω	±3.0%+.05Ω	6.3x rated power for 5 sec.
RF	Metal Film	±0.5%+.05Ω	±0.5%+.05Ω	±0.1%+.05Ω	2x rated power for 0.1 sec.
RW	Wirewound	±0.5%+.05Ω	±3.0%+.05Ω	±0.1%+.05Ω	5x rated power for 5 sec.
RP	Power Film	±3.0%+.05Ω	±5.0%+.05Ω	±0.5%+.05Ω	2x rated power for 0.1 sec.
RN	Wirewound, Non-inductive	±0.5%+.05Ω	±3.0%+.05Ω	±0.1%+.05Ω	5x rated power for 5 sec.

ALL models:
Leaching (260°C Solder immersion, 60 sec.)..... No visible leaching
Thermal Shock (Units at -55°C, then rated power applied).. No mechanical damage
Flammability ..... UL Material rating, UL94V0

STANDARD PART NUMBERS FOR SURFACE MOUNT POWER RESISTORS

Wirewound

Ohmic value	Part No. Prefix ➤	RW1S0BA	RW1S5CA	RW2S0CB	RW2R0CB	RW2S0DA	RW2R0DA	RW3R0DB	RW3R5EA	RW0S6BB	RC1R0EA
	Package style ➤	BA	CA	CB	CB	DA	DA	DB	EA	BB	EA
	Base: standard or recessed ➤	S	S	S	R	S	R	R	R	S	R
	Wattage ➤	1.0	1.5	2.0	2.0	2.0	2.0	3.0	3.5	0.6	1.0
	Suffix ▼ Tolerance suffix: F = 1% J = 5% K=10%										
0.005	R005		J	J		F/J					
0.010	R010	F/J	J		J	F	J	J	J	F	
0.015	R015	F/J	J							F	
0.020	R020	J		J		F	J		J	F	
0.025	R025	J									
0.027	R027	J									
0.030	R030	F	J	J					J	F	
0.033	R033	J									
0.036	R036	J									
0.050	R050	F/J		J		J	F	J	J	F	
0.056	R056	J									
0.075	R075	J								F	
0.080	R080		J						J		
0.100	R100	F/J	J		J	F	J	J	J	F	
0.150	R150		J		J	J					
0.200	R200		J	J					J		
0.220	R220			J							
0.240	R240	J		J						F	
0.300	R300	J			J						
0.330	R330				J						
0.400	R040		J								
0.400	R400				J						
0.470	R470	J		J			J			F	
0.500	R500	J	J			J			J		
0.750	R750	J								F	
1.00	1R00	F/J	J	J			J	J		F	
2.00	2R00									F	

Wirewound

Ohmic value	Part No. Prefix ➤	RW1S0BA	RW1S5CA	RW2S0CB	RW2R0CB	RW2S0DA	RW2R0DA	RW3R0DB	RW3R5EA	RW0S6BB	RC1R0EA
	Package style ➤	BA	CA	CB	CB	DA	DA	DB	EA	BB	EA
	Base: standard or recessed ➤	S	S	S	R	S	R	R	R	S	R
	Wattage ➤	1.0	1.5	2.0	2.0	2.0	2.0	3.0	3.5	0.6	1.0
	Suffix ▼ Tolerance suffix: F = 1% J = 5% K=10%										
3.30	3R30										K
4.70	4R70										K
5.00	5R00									F	
5.60	5R60	J									
6.80	6R80										K
7.50	7R50								J	F	
10.00	10R0	J		J			J			F	K
15.00	15R0	J	J							F	K
20.00	20R0			J							
22.00	22R0									F	K
24.90	24R9									F	
33.00	33R0									F	K
36.00	36R0									F	
47.00	47R0	J							J	F	K
50.00	50R0								J		
51.00	51R0	J									
68.00	68R0										K
82.00	82R0				J						
100.00	100R			J						F	K
120.00	120R		J								
180.00	180R	J									
300.00	300R	J									
470.00	470R					J					
1K	1K00							J			K
4.7K	4K70				J						
5K	5K00								J		

ORDERING INFORMATION

Component type
R = resistor

Type of Base
S = standard
R = recessed

Package
B = 12mm
C = 16mm
D = 24mm
E = 32mm

Package Modifier
A, B sequential

Tolerance
F = 1%
G = 2%
H = 3%
J = 5%
K = 10%

T = Tape and Reel (optional)

R W 3 R 5 E A 1 K 0 0 F E T

Component Modifier
C = carbon/ceramic composition
F = film
P = power film
W = wire
N = wirewound, non-inductive

Wattage
Examples:
1S3 = 1.25W
2S0 or 2R0 = 2.0W
3R5 = 3.5W

Resistance Value
R = Decimal
K = 1,000
M = 1,000,000
Examples:
R249 = 0.249 ohms
24R9 = 24.9 ohms
2K49 = 2,490 ohms

E = RoHS compliant
Available Jan. 2006

(For example, the part number shown is a wirewound resistor, 3.5 watt, recessed base, 32mm tape size, first case size [A], 1000 ohms 1% tolerance.)

2010 SMD

0.6 Watt Wirewound Surface Mount Power

2010 Package

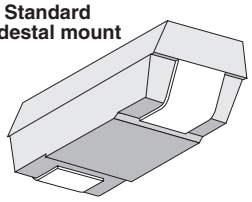

Standard pedestal mount

Series	Wattage	Ohms	Dimensions (in. / *mm*) Length	Height	Width	Voltage
RW0S6BB	0.6	0.01-1K	0.202 / *5.14*	0.135 / *3.42*	0.1 / *2.54*	50

PERFORMANCE DATA

Temp. cycle	(-55°C to 125°C, 1000 cycles)	±0.5%+.05Ω
Load Life	(1000 hours at 25°C)	±3.0%+.05Ω
Immersion	(260°C for 10 sec.)	±0.1%+.05Ω
Leaching	(260°C Solder immersion, 60 sec.)	No visible leaching
Thermal Shock	(Units at -55°C, then rated power applied)	No mechanical damage
Flammability	UL Material rating	UL94V0

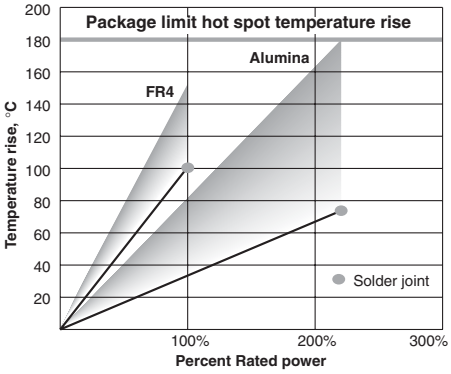

The temperature rise graph data was obtained by a selection of test substrate size and trace width for each resistor size to limit operating temperatures to safe values.

The operating temperature safe rises are either 100°C substrate temperature rise or 180°C package hot spot temperature rise at 25°C ambient.

FR4: 0.062 in. thick; 0.062 in. traces

Alumina: 0.040 in. thick; 0.010 in. traces

ORDERING INFORMATION

Component type R = resistor

Type of Base S = standard

Package B = 12mm

Package Modifier A, B sequential

Tolerance F = 1%

T = Tape and Reel (optional)

R W 0 S 6 B B 1 K 0 0 F E T

E = RoHS compliant

Component Modifier W = wirewound

Wattage 0S6 = 0.6W

Resistance Value
R = Decimal
K = 1,000
M = 1,000,000

Examples:
R249 = 0.249 ohms
24R9 = 24.9 ohms
2K49 = 2,490 ohms

STANDARD PART NUMBERS FOR 2010 SMD

Ohms	Part Number	Ohms	Part Number
0.010	RW0S6BBR010FE	1.00	RW0S6BB1R00FE
0.015	RW0S6BBR015FE	2.00	RW0S6BB2R00FE
0.020	RW0S6BBR020FE	5.00	RW0S6BB5R00FE
0.030	RW0S6BBR030FE	7.50	RW0S6BB7R50FE
0.050	RW0S6BBR050FE	10.00	RW0S6BB10R0FE
0.075	RW0S6BBR075FE	15.00	RW0S6BB15R0FE
0.100	RW0S6BBR100FE	24.00	RW0S6BB24R0FE
0.240	RW0S6BBR240FE	36.00	RW0S6BB36R0FE
0.470	RW0S6BBR470FE	47.00	RW0S6BB47R0FE
0.750	RW0S6BBR750FE	100.00	RW0S6BB100RFE

Check product availability at **www.ohmite.com**

FEATURES

- 1% Tolerance standard
- Smallest wirewound on the market
- Available in low ohmic values

TCR

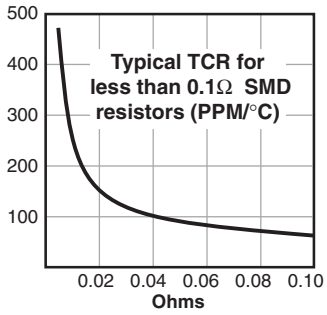

SPECIFICATIONS

25°C ambient

Power: 0.6 watts

Voltage (max.): 50V

Tolerance: 1%

Resistance range: 0.010Ω–1KΩ

Temperature Coefficient:
0.1Ω–1Ω: ±90
1Ω–10Ω: ±50
10Ω+: ±20

Dielectric Withstanding Voltage: 1000V

Tape Size: 12mm, 13" reel, 2500 pcs. per reel.

DERATING

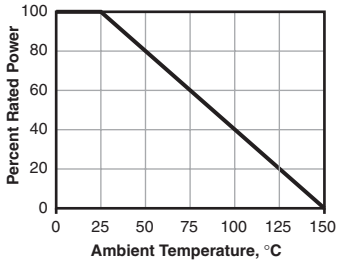

DIMENSIONS

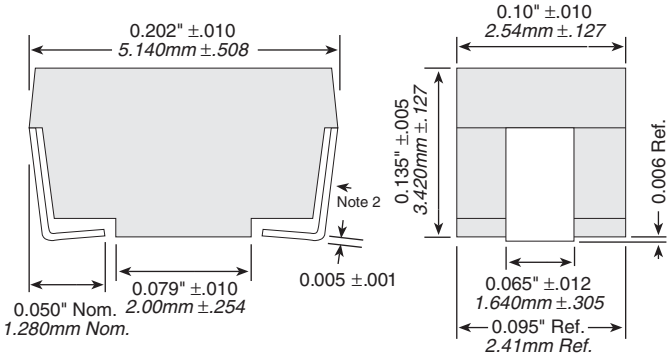

LAND PATTERN

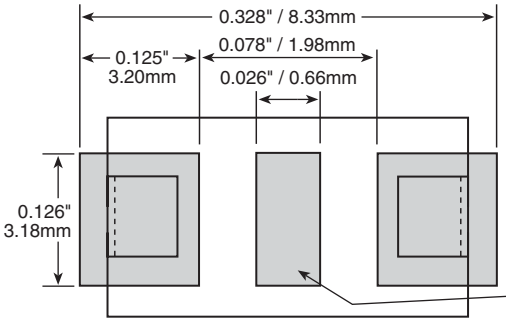

Note 2: Test point is .020 above PCB.

Note 3: Tape and reel dimensions per EIA 481 A except "EA" size which is 12 mm component pitch versus 16mm pitch.

Land pattern dimensions are for reference only

TAPE AND REEL

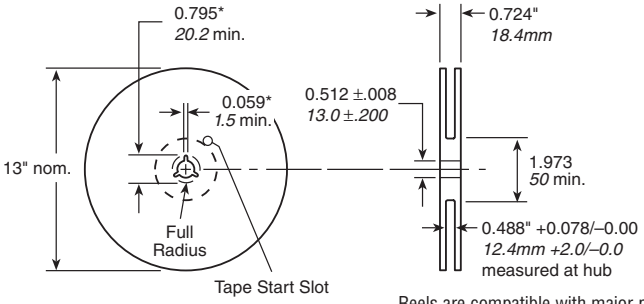

Reels are compatible with major pick-and-place machines and made in accordance with EIA 481 A.

RW1/RW2 Series

Surface Mount
Four Terminal Current Sense

FEATURES

- Extremely low resistance and high precision tolerance
- Low T.C.R. achieved (±50ppm/°C)
- Flameproof UL94-V-0
- Marking: Black body color with white marking

SPECIFICATIONS

TCR max.: ±50 ppm/°C
Rated Ambient Temp: +70°C
Oper. Temp. Range: -55°C - +125°C

DERATING

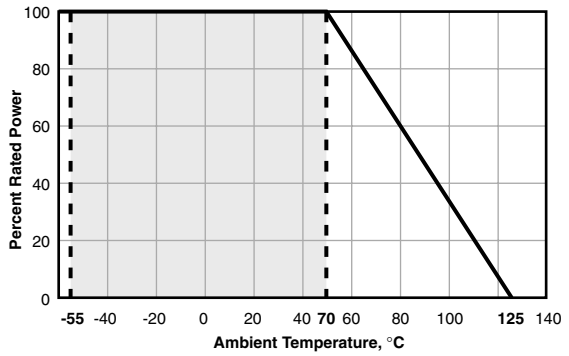

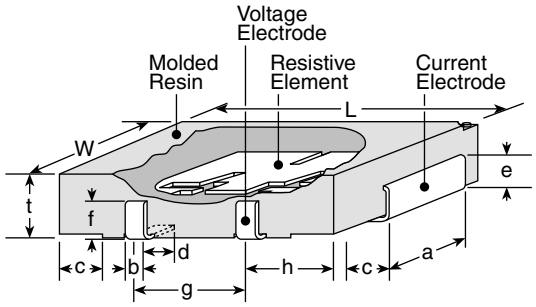

Type	Power Rating (watts)	Resistance Range E-12 (mΩ)	Resistance Tolerance	Dielectric Withstanding Voltage	TCR (ppm/°C) Max.	Qty./ Reel
RW1S0CK	1	5mΩ - 50mΩ	1%	500V	±50	1000
RW2S0DK	2	5mΩ - 50mΩ	1%	500V	±50	1000

TYPICAL SCHEMATIC

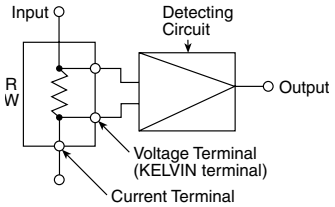

SURFACE TEMP. RISE

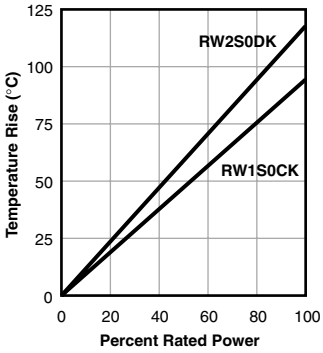

LAND PATTERN

Land pattern dimensions are for reference only

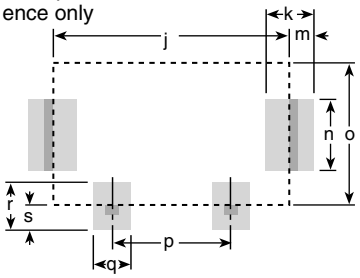

DIMENSIONS inches *(mm)*

	RW1S0CK	RW2S0DK
L	0.425±.02 *(10.8±0.5)*	0.504±.02 *(12.8±0.5)*
W	0.244±.012 *(6.2±0.3)*	0.323±.012 *(8.2±0.3)*
t	0.083±.008 *(2.1±0.2)*	0.122±.008 *(3.1±0.2)*
a	0.118±.012 *(3.0±0.3)*	0.197±.012 *(5.0±0.3)*
b	0.031±.008 *(0.8±0.2)*	0.039±.008) *(1.0±0.2)*
c	0.055±.02 *(1.4±0.5)*	0.079±.02 *(2.0±0.5)*
d	0.047±.02 *(1.2±0.5)*	0.079±.02 *(2.0±0.5)*
e	0.051±.012 *(1.3±0.3)*	0.087±.012 *(2.2±0.3)*
f	0.051±.012 *(1.3±0.3)*	0.087±.012 *(2.2±0.3)*
g	0.197±.004 *(5.0±0.1)*	0.236±.004 *(6.0±0.1)*
h	0.098±.004 *(2.5±0.1)*	0.118±.004 *(3.0±0.1)*
j	0.39 *(10.0)*	0.47 *(12.0)*
k	0.08 *(2.0)*	0.09 *(2.3)*
m	0.04 *(1.0)*	0.05 *(1.15)*
n	0.12 *(3.0)*	0.21 *(5.3)*
o	0.24 *(6.0)*	0.31 *(8.0)*
p	0.20 *(5.0)*	0.24 *(6.0)*
q	0.06 *(1.6)*	0.09 *(2.2)*
r	0.08 *(2.0)*	0.13 *(3.2)*
s	0.04 *(1.0)*	0.06 *(1.6)*

ORDERING INFORMATION

RoHS Compliant

RW1S0CKR005FET

- **Type & Power Rating**: RW1S0CK = 1 watt; RW2S0DK = 2 watt
- **Ohms**: R005 = 0.005Ω; R050 = 0.05Ω
- **Tolerance**: F = 1%; D = 0.5%
- **Packaging**: T = tape and reel (optional)

The part itself will be marked as follows:

CSR1 10m ohms D

- Current Sense Resistor
- **Power Rating** (watts)
- **Ohms**: 10m ohms = 0.01Ω
- **Tolerance**: F = 1%; D = 0.5%

STANDARD PART NUMBERS FOR RW SERIES

	Wattage:	1 watt		2 watt
	Tolerance:	1%	0.5%	1%
Ohms	**Series:**	RW1S0CK----FET	RW1S0CK----DET	RW2S0DK----FET
0.00500		RW1S0CKR005FET	RW1S0CKR005DET	RW2S0DKR005FET
0.01000		RW1S0CKR010FET	RW1S0CKR010DET	RW2S0DKR010FET
0.02500		RW1S0CKR025FET	RW1S0CKR025DET	RW2S0DKR025FET
0.05000		RW1S0CKR050FET	RW1S0CKR050DET	RW2S0DKR050FET

PERFORMANCE CHARACTERISTICS

Parameter	Requirement ΔR Limit	Typical	Test Method
Resistance	Within regulated tolerance	—	25°C
T.C.R.	Within specified T.C.R.	—	+25°C/-55°C and +25°C/+125°C
Overload	±1.0%	±1.0%	Rated power x 5 for 5 seconds
Resistance to Solder Heat	±1.0%	±1.0%	260°C ± 5°C, 10 seconds ±1 second
Rapid Change of Temperature	±1.0%	±0.5%	-55°C (30 minutes), +125°C (30 minutes), 500 cycles
Moisture Resistance	±2.0%	±0.5%	40°C ± 2°C, 90 - 95% RH, 1000 hours, 1.5 hr ON, 0.5 hr OFF cycle
Endurance at 70°C	±1.0%	±0.5%	70°C ± 2°C, 1000 hours, 1.5 hr ON, 0.5 hr OFF cycle
Low Temperature Operation	±0.5%	±0.25%	-55°C, 1 hour
High Temperature Exposure	±0.5%	±0.25%	+125°C, 100 hours

Check product availability at **www.ohmite.com**

WL Series

Miniature Wirewound Current Sense

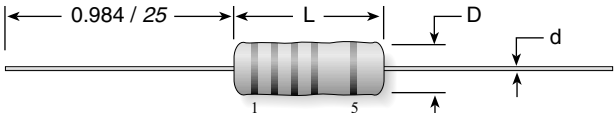

Type	Power Rating (watts)	Resistance Range (Ω)	Dim. L (mm/in)	Dim. D (mm/in)	Dim. d (mm/in)
WLA	0.5	0.005-0.100	5.08 / 0.200	2.54 / 0.100	0.60 / 0.024
WLB	1	0.005-0.100	7.00 / 0.276	3.00 / 0.120	0.60 / 0.024
WLC	2	0.010-0.100	11.4 / 0.450	6.86 / 0.270	0.80 / 0.031

FEATURES

- Ultra-low ohmic value series for Current Sensing applications
- Very low inductance (<1nH at 1MHz Test)
- Miniaturized dimensions, Better power to dimension ratios
- Use of the highest quality standard (96% Alumina) ceramic core
- Manufacturing process–Wire winding/Spot Welding–by Computer Numerical Control (CNC) machine tools to ensure consistency of product quality.
- Encapsulated by epoxy molding compound
- Advanced IC encapsulation mold/die technologies

SPECIFICATIONS

Material

Ceramic Core: CeramTec Rubalit® 96% alumina

End Caps: Stainless steel, precision formed

Leads: Copper wire, 100% Sn (Lead Free) coated

CN49W alloy resistance wire TC ±20ppm/°C

Encapsulation: SUMICON 1100/1200 Epoxy molding compound for IC encapsulation

Electrical

Standard Tolerance: F (1.0%), J (5.0%)

Temperature Coefficient (ppm/°C):
±300ppm/°C for ≤0.03Ω
±100ppm/°C for ≥0.033Ω

Maximum Working Voltage: $\sqrt{PxR}$

DERATING

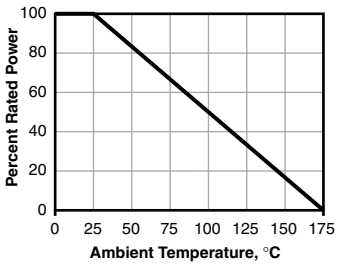

PERFORMANCE CHARACTERISTICS

Test	Conditions Of Test	Performance
Thermal Shock	Rated power applied until thermal stability, -55°C +0°C,-5°C,15min.	±2.0%
Short-time Overload	5 times rated wattage for 5 seconds	±2.0%
Solderability	Method 208 of MIL-STD-202	±2.0%
Terminal Strength	Pull test:10 pounds, 5 to10 seconds, Twist test: 1080°,5 second/rotation	±1.0%
Dielectric Withstanding Voltage	500 Volts rms for 1W. 1 minute	±1.0%
High Temperature Exposure	Exposed to an ambient temperature of 275 +5/-0°C for 250 ±8 hours,	±5.0%
Moisture Resistance	MIL-STD-202 Method 106, 7b not applicable	±2.0%
Low Temperature Storage	Cold chamber at a temperature of -65 ±2°C for 24 ±4 hours	±2.0%
Vibration, High Frequency	Frequency varied 10 to 2000Hz, 200G peak, 2 directions 6 hours each	±1.0%
Load Life	1000/2000 hours at rated power, +25°C, 1.5 hours "On", 0.5 hours "Off"	±5.0%

STANDARD PART NUMBERS FOR WL SERIES

Wattage: / Series:	0.5 WLA	1.0 WLB	2.0 WLC
Ohms			
0.005	WLAR005FE	WLBR005FE	
0.01	WLAR01FE	WLBR01FE	WLCR01FE
0.015	WLAR015FE	WLBR015FE	WLCR015FE
0.02	WLAR02FE	WLBR02FE	WLCR02FE
0.025	WLAR025FE	WLBR025FE	WLCR025FE
0.03	WLAR03FE	WLBR03FE	WLCR03FE
0.05	WLAR05FE	WLBR05FE	WLCR05FE
0.10	WLAR10FE	WLBR10FE	WLCR10FE

Check product availability at **www.ohmite.com**

ORDERING INFORMATION

RoHS compliant

W L A R 0 1 0 F E - T

Series	Power	Ohms	Tolerance	Package
	A = 0.5 B = 1 C = 2		F = 1% J = 5%	T = Tape blank = 25pc Pack

KEY TO FIVE-BAND CODE

Band	1	2	3	4	5
Color	Digit			Multiplier	Tolerance
Black	0	0	0	x 1Ω	
Brown	1	1	1	x 10Ω	± 1% (F)
Red	2	2	2	x 100Ω	± 2% (G)
Orange	3	3	3	x 1KΩ	
Yellow	4	4	4	x 10KΩ	
Green	5	5	5	x 100KΩ	± 0.5% (D)
Blue	6	6	6	x 1MΩ	± 0.25% (C)
Violet	7	7	7	x 10MΩ	± 0.10% (B)
Grey	8	8	8		± 0.05%
White	9	9	9	x 0.001Ω	
Gold				x 0.1Ω	± 5% (J)
Silver				x 0.01Ω	± 10% (K)

To see the latest in resistor technology click on the "What's New" tab at ohmite.com

WH/WN Series

Miniature Molded Wirewound

RoHS Compliant

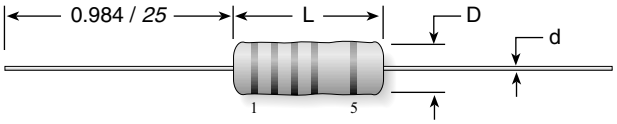

FEATURES

- WHM, UltraHigh ohmic value precision series,
- WNM, Aryton Perry winding Non-Inductive available. Inductance <1nH at 1MHZ test,
- Designed to meet the most stringent MIL-R-26F, MIL-STD-202 standard requirements
- Miniaturized Better power to dimension ratios
- Use of the highest quality standard (96% Alumina) ceramic core
- Manufacturing process -Wire winding/ Spot Welding- by Computer Numerical Control (CNC) machine tools to ensure consistency of product quality.
- Encapsulated by epoxy molding compound
- Advanced IC encapsulation mold/die technologies

SPECIFICATIONS

Material

Ceramic Core: CeramTec Rubalit® 96% alumina

End Caps: Stainless steel, precision formed

Leads: Copper wire,100% Sn (lead free) coated

ISAOHM alloy resistance wire TC+/-20ppm/°C

Encapsulation: SUMICON 1100/ 1200 Epoxy molding compound for IC encapsulation

Electrical

Standard Tolerance: F (1.0%), J (5.0%)

Temperature Coefficient (ppm/°C):
±90 for 0.100Ω
±20 for >0.100Ω

Maximum Working Voltage: (PxR)1/2

Derating: Linearly from 100% @ +70°C to 0% @ +150°C.

Operating Temp: -55°C to +150°C

Type	Power Rating (watts)	Resistance Range (Ω)	Dim. L (mm/in)	Dim. D (mm/in)	Dim. d (mm/in)
WHA WNA	0.5	0.100 - 1.0K 0.100 - 250	5.08 / 0.200	2.54 / 0.100	0.60 / 0.024
WHB WNB	1	0.100 - 4.0K 0.100 - 1.0K	7.00 / 0.276	3.00 / 0.120	0.60 / 0.024
WHC WNC	2	0.10 - 8.0K 0.10 - 2.0K	11.4 / 0.450	6.86 / 0.270	0.80 / 0.031

ORDERING INFORMATION

H = Inductive
N = Non Inductive

RoHS compliant

W H A 1 0 R F E - T

Series	Power	Ohms	Tolerance	Package
	A = 0.5 B = 1 C = 2		F = 1% J = 5%	T = Tape blank = 25pc Pack

KEY TO FIVE-BAND CODE

Band	1	2	3	4	5
Color	Digit			Multiplier	Tolerance
Black	0	0	0	x 1Ω	
Brown	1	1	1	x 10Ω	± 1% (F)
Red	2	2	2	x 100Ω	± 2% (G)
Orange	3	3	3	x 1KΩ	
Yellow	4	4	4	x 10KΩ	
Green	5	5	5	x 100KΩ	± 0.5% (D)
Blue	6	6	6	x 1MΩ	± 0.25% (C)
Violet	7	7	7	x 10MΩ	± 0.10% (B)
Grey	8	8	8		± 0.05%
White	9	9	9		
Gold				x 0.1Ω	± 5% (J)
Silver				x 0.01Ω	± 10% (K)

PERFORMANCE CHARACTERISTICS

Test	Conditions of Test	Performance
Thermal Shock	Rated power applied until thermal stability, -55°C +0°C,-5°C,15min.	±0.2%
Short-time Overload	5 times rated wattage for 5 seconds	±0.2%
Solderability	Method 208 of MIL-STD-202	±0.2%
Terminal Strength	Pull test:10 pounds, 5 to10 seconds, Twist test: 1080°,5 second/rotation	±0.1%
Dielectric Withstanding Voltage	500Volts rms for 1W, 2W 1000Volts rms. 1 minute	±0.1%
High Temperature Exposure	Exposed to an ambient temperature of 275 +5/-0°C for 250 ±8 hours,	±0.5%
Moisture Resistance	MIL-STD-202 Method 106, 7b not applicable	±0.2%
Low Temperature Storage	Cold chamber at a temperature of -65 ±2°C for 24+/-4 hours	±0.2%
Vibration, High Frequency	Frequency varied 10 to 2000Hz, 200G peak, 2 directions 6 hours each	±0.1%
Load Life	1000/2000 hours at rated power, +25°C, 1.5 hours "On", 0.5 hours "Off"	±0.5%

STANDARD PART NUMBERS FOR WH/WN SERIES

Wattage: Series:	0.5 WHA	0.5 WNA	1.0 WHB	1.0 WNB	2.0 WHC	2.0 WNC
Ohms						
0.1	WHAR10FE	WNAR10FE	WHBR10FE	WNBR10FE	WHCR10FE	WNCR10FE
0.25	WHAR25FE	WNAR25FE	WHBR25FE	WNBR25FE	WHCR25FE	WNCR25FE
0.50	WHAR50FE	WNAR50FE	WHBR50FE	WNBR50FE	WHCR50FE	WNCR50FE
0.75	WHAR75FE	WNAR75FE	WHBR75FE	WNBR75FE	WHCR75FE	WNCR75FE
1	WHA1R0FE	WNA1R0FE	WHB1R0FE	WNB1R0FE	WHC1R0FE	WNC1R0FE
2	WHA2R0FE	WNA2R0FE	WHB2R0FE	WNB2R0FE	WHC2R0FE	WNC2R0FE
4	WHA4R0FE	WNA4R0FE	WHB4R0FE	WNB4R0FE	WHC4R0FE	WNC4R0FE
5	WHA5R0FE	WNA5R0FE	WHB5R0FE	WNB5R0FE	WHC5R0FE	WNC5R0FE
10	WHA10RFE	WNA10RFE	WHB10RFE	WNB10RFE	WHC10RFE	WNC10RFE
15	WHA15RFE	WNA15RFE	WHB15RFE	WNB15RFE	WHC15RFE	WNC15RFE
25	WHA25RFE	WNA25RFE	WHB25RFE	WNB25RFE	WHC25RFE	WNC25RFE
51	WHA51RFE	WNA51RFE	WHB51RFE	WNB51RFE	WHC51RFE	WNC51RFE
75	WHA75RFE	WNA75RFE	WHB75RFE	WNB75RFE	WHC75RFE	WNC75RFE
100	WHA100FE	WNA100FE	WHB100FE	WNB100FE	WHC100FE	WNC100FE
150	WHA150FE	WNA150FE	WHB150FE	WNB150FE	WHC150FE	WNC150FE
200	WHA200FE	WNA200FE	WHB200FE	WNB200FE	WHC200FE	WNC200FE
250	WHA250FE	WNA250FE	WHB250FE	WNB250FE	WHC250FE	WNC250FE
330	WHA330FE		WHB330FE	WNB330FE	WHC330FE	WNC330FE
470	WHA470FE		WHB470FE	WNB470FE	WHC470FE	WNC470FE
560	WHA560FE		WHB560FE	WNB560FE	WHC560FE	WNC560FE
750	WHA750FE		WHB750FE	WNB750FE	WHC750FE	WNC750FE
1K	WHA1K0FE		WHB1K0FE	WNB1K0FE	WHC1K0FE	WNC1K0FE
2.5K			WHB2K5FE		WHC2K5FE	

Check product availability at **www.ohmite.com**

CS3 Series

Wire Element Four Terminal Precision Current Sense

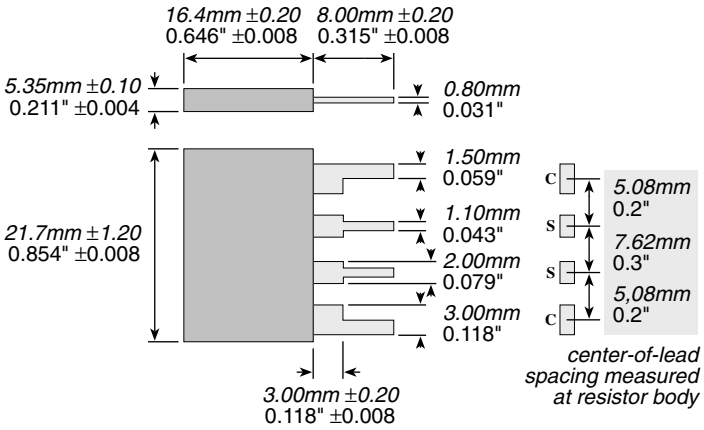

The CS3 Series utilizes state of the art technology to achieve highly reliable non-inductive performance. The CS3 is ideal for current monitoring and control applications.

FEATURES

- Values beginning at 1 miliohm
- Non Inductive Design
- Four terminal Kelvin connection

INTERNAL CIRCUIT

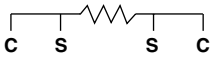

C = current
S = sense voltage

SPECIFICATIONS

Material

Terminal Material: Kelvin Terminals; 97% Sn / 3% Ag solder over copper

Encapsulation: Polyester over resistance element

Electrical

Standard Resistance Values: 1 mΩ - 50 mΩ

Resistance Tolerances: 1%, 2%, 5%

Temperature Coefficient: TC referenced to 25°C, ΔR taken at -15°C and +105°C, 60ppm/°C

Power Rating: 3W at 70°C max. 40Amp permanent

Operating Temp.: -55°C to 150°C

Storage Temp.: -40°C to 85°C

DERATING

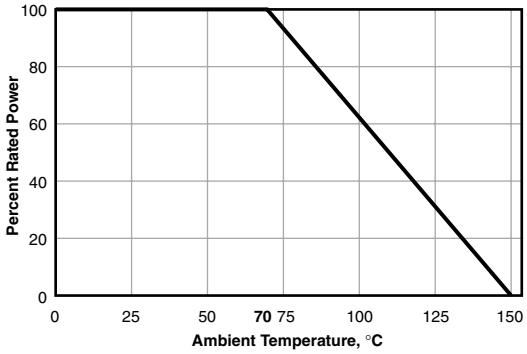

TEST DATA

Load Life	(1,000 hours at rated power at 70°C)	ΔR 0.2% max.
Moisture Resistance	(Mil-Std-202, Method 106, Cond. A)	ΔR 0.2% max.
Thermal Shock	(Mil-Std-202, Method 107)	ΔR 0.2% max.

STANDARD PART NUMBERS FOR CS3 SERIES

Series Tolerance	CS3F 1%	Series Tolerance	CS3F 1%
Ohms		**Ohms**	
0.001	CS3FR001E	**0.015**	CS3FR015E
0.002	CS3FR002E	**0.02**	CS3FR020E
0.003	CS3FR003E	**0.025**	CS3FR025E
0.005	CS3FR005E	**0.03**	CS3FR030E
0.01	CS3FR010E	**0.036**	CS3FR036E
		0.05	CS3FR050E

Check product availability at **www.ohmite.com**

ORDERING INFORMATION

C S 3 J R 0 5 0 E

Style	Tolerance	Ohms	RoHS Compliant
	F = 1% G = 2% J = 5%	R = Decimal Example: R010 = 0.010 R005 = 0.005	Non-compliant version not recommended for new designs

Subscribe to our New Product Bulletin at ohmite.com

10 Series
Axial Wire Element Current Sense

FEATURES

- Ideal for current sensing applications
- 1% Tolerance standard, others available
- Fixed resistance measuring point "M"
- Low inductance (non-inductive below 0.25Ω)
- RoHS compliant product available; add "E" suffix to part number to specify

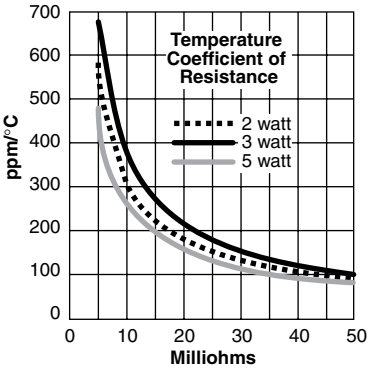

SPECIFICATIONS

Material

Terminals: Solder-plated copper terminals or copper clad steel depending on ohmic value. RoHS solder composition is 96% Sn, 3.5% Ag, 0.5% Cu

Encapsulation: Silicone molding compound.

Derating

Linearly from 100% @ +25°C to 0% @ +275°C.

Electrical

Tolerance: ±1% standard. Others available.

Power rating: Based on 25°C free air rating.

Overload: 5 times rated wattage for 5 seconds.

Dielectric withstanding voltage: 1000 VRMS for 3 and 5 watt; 500 VRMS for 2 watt.

Insulation resistance: Not less than 1000MΩ.

Thermal EMF: Less than ±2μV/°C.

Temperature range: -55°C to 275°C.

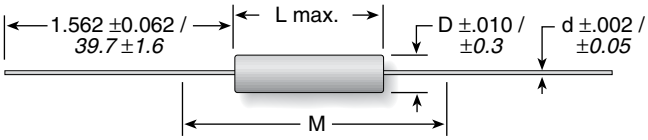

Two Terminal Axial

Series	Wattage	Ohms	Dimensions (in. / *mm*) Length	Diam.	"M"	Lead ga.
12	2	0.005-0.10	0.416 / *10.6*	0.094 / *2.4*	1.156 / *29.4*	20
13	3	0.005-0.20	0.570 / *14.5*	0.205 / *5.2*	1.310 / *33.3*	20
15	5	0.005-0.25	0.935 / *23.8*	0.330 / *8.4*	1.675 / *42.5*	18

FEATURES

- Ideal for current sensing applications
- 1% Tolerance standard, others available
- Low Inductance (non-inductive below 0.25Ω)
- Tinned Copper Leads
- RoHS Compliant

SPECIFICATIONS

Material

Terminals: Tinned Copper Leads

Encapsulation: Silicone Molding Compound

Derating

Linearly from 100% at +25˚C to 0% at +200˚C

Electrical

Resistance Range: 0.005Ω to 0.100Ω standard

Standard Tolerance: ±1%; others available

Operating Temperature Range: -55˚C to +200˚C

Temperature Coefficient of Resistance, 0˚C to 85˚C:
≥0.015Ω: ±50 PPM/˚C
<0.015Ω: ±100 PPM/˚C

Environmental Performance: Exceeds the requirements of MIL-PRF-49465

Power rating: Based on 25˚C free air rating.

Overload: 5 times rated wattage for 5 seconds

Max. Current: 22 amps

Dialectric withstanding voltage: 1500 VAC for 4.5 and 7 watt
1000 VAC for 3 watt

Insulation resistance: Not less than 1000 MΩ

Thermal EMF: Less than ±2μV/˚C

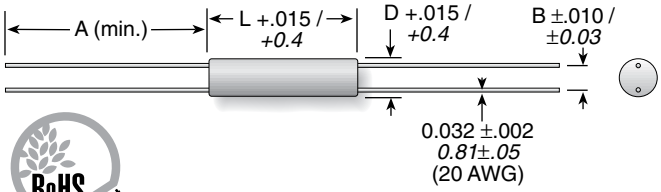

Four Terminal Axial

Series	Wattage	Ohms	Dimensions (in. / *mm*) Length	Diam.	A	B
13	3	0.005-0.1	0.625/*15.9*	0.200/*5.08*	1.25/*31.8*	0.125/*3.18*
14	4.5	0.005-0.1	1.060/*26.9*	0.335/*8.51*	1.50/*38.1*	0.200/*5.08*
17	7	0.005-0.1	1.500/*38.1*	0.375/*9.53*	1.50/*38.1*	0.200/*5.08*

Ohmite's Four-terminal Current-sense Resistors are specifically designed for low-resistance applications requiring the highest accuracy and temperature stability. This four-terminal version of Ohmite's 10 Series resistor is specially designed for use in a Kelvin configuration, in which a current is applied through two opposite terminals and sensing voltage is measured across the other two terminals .

The Kelvin configuration enables the resistance and temperature coefficient of the terminals to be effectively eliminated. The four terminal design also results in a lower temperature coefficient of resistance and lower self-heating drift which may be experienced on two-terminal resistors. The requirement to connect to the terminals at precise test points is eliminated, allowing for tighter tolerancing on the end application.

STANDARD PART NUMBERS FOR 10 SERIES

Ohmic value	2 Terminal 2 watt	3 watt	5 watt	4 Terminal 3 watt	4.5 watt	7 watt
0.005	12FR005	13FR005	15FR005	13FPR005E	14FPR005E	17FPR005E
0.010	12FR010	13FR010	15FR010	13FPR010E	14FPR010E	17FPR010E
0.015	12FR015	13FR015	15FR015	13FPR015E	14FPR015E	17FPR015E
0.020	12FR020	13FR020	15FR020	13FPR020E	14FPR020E	17FPR020E
0.025	12FR025	13FR025	15FR025	13FPR025E	14FPR025E	17FPR025E
0.030	12FR030	13FR030	15FR030	13FPR030E	14FPR030E	17FPR030E
0.040	12FR040	13FR040	15FR040	13FPR040E	14FPR040E	17FPR040E
0.050	12FR050	13FR050	15FR050	13FPR050E	14FPR050E	17FPR050E
0.060	12FR060	13FR060	15FR060	13FPR060E	14FPR060E	17FPR060E
0.070	12FR070	13FR070	15FR070	13FPR070E	14FPR070E	17FPR070E
0.075				13FPR075E	14FPR075E	17FPR075E
0.080	12FR080	13FR080	15FR080	13FPR080E	14FPR080E	17FPR080E
0.090	12FR090	13FR090	15FR090	13FPR090E	14FPR090E	17FPR090E
0.100	12FR100	13FR100	15FR100	13FPR100E	14FPR100E	17FPR100E
0.150		13FR150	15FR150			
0.200		13FR200	15FR200			
0.250			15FR250			

ORDERING INFORMATION

Wattage — Terminals (Blank = 2 terminals, P = 4 terminals) — RoHS Compliant

1 3 F P R 0 5 0 E

10 Series — Tolerance (F = 1%, D = 0.5%) — Ohm Value (Example: R050 = 0.05Ω)

Check product availability at **www.ohmite.com**

60 Series

Two Terminal Metal Element Current Sense

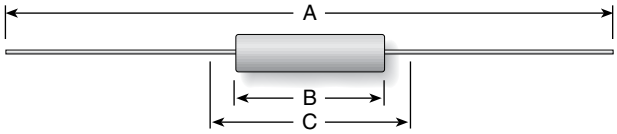

These non-inductive, 3-piece welded element resistors offer a reliable low-cost alternative to conventional current sense products. With resistance values as low as 0.005Ω, and wattages from 0.1w to 3w, the 60 Series offers a wide variety of design choices.

FEATURES

- Low inductance
- Low cost
- Wirewound performance
- Flameproof

SPECIFICATIONS

Material

Resistor: Nichrome resistive element

Terminals: Copper clad steel or copper depending on style. RoHS solder composition is 96% Sn, 3.5% Ag, 0.5% Cu

Derating

Linearly from 100% @ +25°C to 0% @ +275°C.

Electrical

Tolerance: ±3% standard, others available.

Power rating: Based on 25°C ambient.

Overload: 5x rated power for 5 seconds.

Inductance: <10nh

To calculate max amps: use the formula $\sqrt{P/R}$.

TCR AS A FUNCTION OF RESISTANCE

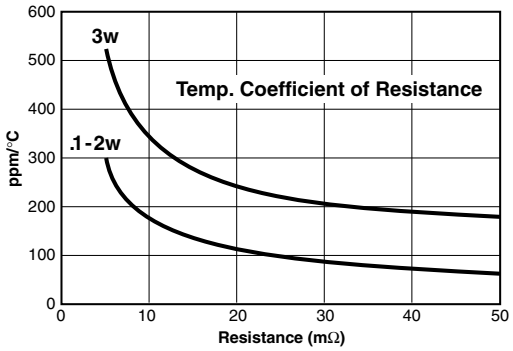

Special Leadform Units Available

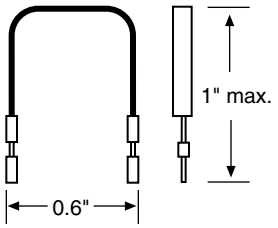

ORDERING INFORMATION

E = RoHS compliant

6 0 5 H R 0 2 0 E

Series

Wattage
00 = 1/10
01 = 1/8
02 = 1/5
03 = 1/4
04 = 3/8
05 = 1/2
07 = 3/4
10 = 1.0
15 = 1.5
20 = 2.0
30 = 3.0

Tolerance
F = 1%
H = 3%
J = 5%

Ohms
R005 = .005
R010 = .01
R020 = .02
R050 = .05
R100 = 0.10

Our friendly Customer Service team can be reached at 866-9-OHMITE

PARTIAL LISTING OF AVAILABLE VALUES

(Contact Ohmite for others)

Part Number	Watts	Ohms	Tolerance	Dimensions A (ref.)	B (max.)	C (±0.010)	Lead Ga.
600HR050E	0.1	0.05	3%	2.440	0.155	0.655	24
600HR033E	0.1	0.033	3%	2.440	0.155	0.655	24
600HR036E	0.1	0.036	3%	2.440	0.155	0.655	24
601HR027E	0.125	0.027	3%	2.440	0.155	0.655	24
601HR030E	0.125	0.03	3%	2.440	0.155	0.655	24
601HR025E	0.125	0.025	3%	2.440	0.155	0.655	24
602HR050E	0.2	0.05	3%	3.530	0.250	0.559	22
603HR005E	0.25	0.005	3%	2.440	0.155	0.655	24
603HR010E	0.25	0.01	3%	2.440	0.155	0.655	24
603HR015E	0.25	0.015	3%	2.440	0.155	0.655	24
603HR050E	0.25	0.05	3%	3.685	0.330	1.310	20
604HR010E	0.375	0.01	3%	3.530	0.250	0.559	22
604HR020E	0.375	0.02	3%	3.530	0.250	0.559	22
604HR025E	0.375	0.025	3%	3.530	0.250	0.559	22
604HR100E	0.375	0.01	3%	3.587	0.65	1.125	20
605HR010E	0.5	0.01	3%	3.685	0.355	1.310	20
605HR020E	0.5	0.02	3%	3.685	0.330	1.310	20
605HR030E	0.5	0.03	3%	3.685	0.330	1.310	20
605HR100E	0.5	0.1	3%	3.981	0.750	1.675	18
607HR050E	0.75	0.05	3%	3.587	0.630	1.106	20
607HR005E	0.75	0.005	3%	3.674	0.320	1.310	20
610HR005E	1	0.005	3%	3.587	0.650	1.125	20
610HR010E	1	0.01	3%	3.587	0.630	1.106	20
610HR020E	1	0.02	3%	3.587	0.630	1.106	20
610HR030E	1	0.03	3%	3.587	0.650	1.106	20
610HR050E	1	0.05	3%	3.981	0.750	1.675	18
615HR010E	1.5	0.01	3%	3.981	0.750	1.675	18
615HR020E	1.5	0.02	3%	3.981	0.750	1.675	18
615HR030E	1.5	0.03	3%	3.981	0.750	1.675	18
620HR005E	2	0.005	3%	3.981	0.750	1.675	18
630HR010E	3	0.01	3%	4.125	0.781	1.68*	18
630HR015E	3	0.015	3%	4.125	1.11	2	18
630HR025E	3	0.025	3%	4.125	1.279	2.125	18
630HR050E	3	0.05	3%	4.125	1.664	2.375	18

*Reference dimensions; contact Ohmite for details

Check product availability at **www.ohmite.com**

60 Series

Four Terminal Bare Element

610 Series (1 watt)

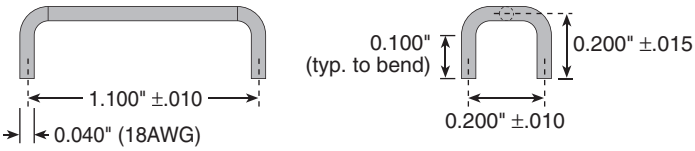

650 Series (5 watt)

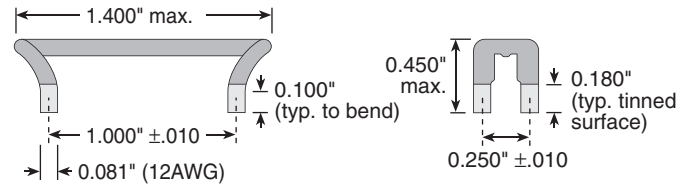

Series	Wattage	Resistance Range (Ω)*	Amps max.	Tolerance*
610	1W	0.002-0.050	32	1%
650	5W	0.002-0.005	100	1%

**Standard; others available*

ORDERING INFORMATION

Terminals
P = 4 terminals

RoHS Compliant

6 1 0 F P R 0 5 0 E

60 Series

Wattage
10 = 1.0
50 = 5.0

Tolerance
F = 1%
D = 0.5%

Ohm Value
Example:
R050= 0.05Ω

Check product availability at **www.ohmite.com**

STD. PART NUMBERS

Ohmic value	610 Series 1 watt	650 Series 5 watt
0.002	610FPR002E	650FPR002E
0.005	610FPR005E	650FPR005E
0.010	610FPR010E	–
0.015	610FPR015E	–
0.020	610FPR020E	–
0.025	610FPR025E	–
0.036	610FPR036E	–
0.050	610FPR050E	–

Ohmite's Four Terminal Bare Element Resistors provide ultra low resistance values (to 0.0005Ω) for relatively high current requirements, with the advantages of a Kelvin configuration and PC Board mounting capability.

These shunt resistors are specifically designed for low resistance applications requiring the highest accuracy and temperature stability. This Four Terminal version of Ohmite's 60 Series Resistor is specially designed for use in a Kelvin configuration, in which a current is applied through two opposite terminals and sensing voltage is measured across the other two terminals.

The Kelvin configuration enables the resistance and temperature coefficient of the terminals to be effectively eliminated. The four terminal design also results in a lower Temperature Coefficient of Resistance and lower self heating drift which may be experienced on two terminal resistors. The requirement to connect to the terminals at precise test points is eliminated, allowing for tighter tolerancing on the end application.

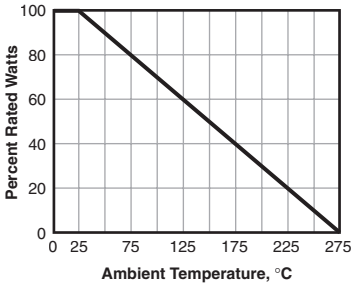

FEATURES

- Ideal for current sensing applications
- 1% tolerance standard, others available
- Low inductance (non-inductive below 0.05Ω)
- RoHS compliant
- Radial, self-supporting, design is ideal for PC board mounting
- High Power-to-size ratio
- Decimal marked, silicone coated (650 Series only)

SPECIFICATIONS

Material

Terminals: Tinned Copper

Resistive element: Manganin Alloy

Electrical

Operating Temperature Range: -55˚C to +275˚C.

Temperature Coefficient of Resistance, 0˚C to 85˚C: ±50 PPM/˚C, .015Ω and higher ±100 PPM/˚C, .015Ω and lower

Environmental Performance: Exceeds the requirements of MIL-PRF-49465

Power rating: Based on 25˚C free air rating

Overload: 5 times rated wattage for 5 seconds

Thermal EMF: Less than ±3µV/˚C

Derating: Linearly from 100% @ +25°C to 0% @ 275°C

20 Series

Vitreous Enamel Conformal Axial Terminal Wirewound, 5% Tolerance Standard

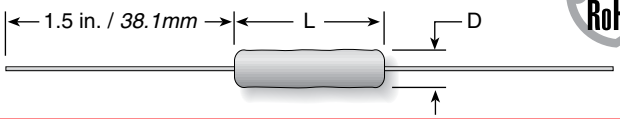

RoHS Compliant

Series	Wattage	Ohms	Dimensions (in. / mm) Length*	Diam.*	Max. Volt.**	Lead ga.
21	1	1.0-3.0K	0.421 / 10.7	0.156 / 4.0	75	24
22	2	1.0-3.0K	0.421 / 10.7	0.219 / 5.6	65	20
23	3	0.1-10K	0.515 / 13.1	0.220 / 5.6	135	20
25	5	0.1-28K	1.015 / 25.8	0.276 / 7.0	330	20
27	7	0.1-25K	1.265 / 32.1	0.394 / 10.0	450	20
20	10	0.1-100K	1.859 / 47.2	0.394 / 10.0	720	20

12.5 watt size available on special order

*For units below 1Ω, add 15% to body diameter, 10% to body length.

**Maximum Voltage is based on Ohm's Law [$V=\sqrt{P*R}$] as limited by the resistance value of specified product

The 20 Series axial terminal resistors are both durable and economical. They have all the electrical attributes of the more expensive 90 Series resistors, including all-welded construction.

They offer the durability of a lead free conformal vitreous enamel coating and are ideal for computer, communications and industrial applications in which cost, quality, and reliability are key considerations.

FEATURES

- Rugged vitreous enamel coating withstands high humidity and temperature cycling.
- Durable construction, recommended for industrial applications where reliability is paramount.
- All-welded construction.
- Flame resistant lead free vitreous enamel coating.
- RoHS compliant; Add "E" suffix to part number to specify.

SPECIFICATIONS

Material

Coating: Conformal lead free vitreous enamel.

Core: Ceramic.

Terminals: Solder-coated axial. RoHS solder composition is 96% Sn, 3.5% Ag, 0.5% Cu

Derating

Linearly from
100% @ +25°C to
0% @ +350°C.

Electrical

Tolerance: ±5% standard. Other tolerances available.

Power rating: Based on 25°C free air rating (other wattages available).

Overload:
Under 7 watts: 5 times rated wattage for 5 seconds.
7 watts and over: 10 times rated wattage for 5 seconds.

Temperature coefficient:
1 to 9.99 ohms: ±50 ppm/°C
10 ohms and over: ±30 ppm/°C

ORDERING INFORMATION

RoHS Compliant

2 1 J R 1 0 E

20 Series	Wattage	Tolerance	Resistance Value
Vitreous Enamel	1 = 1W	J = 5%	R10 = 0.10Ω
Axial Lead	2		1R0 = 1.0Ω
Wirewound	3		10R = 10.0Ω
	5		250 = 250Ω
	7		1K0 = 1,000Ω
	0 = 10W		4K5 = 4,500Ω
			50K = 50,000Ω

Check product availability at **ohmite.com**

STANDARD PART NUMBERS FOR 20 SERIES

Ohmic value	Part No. Prefix ➤ Suffix ▼	Wattage 1 21J	2 22J	3 23J	5 25J	7 27J	10 20J
0.10	R10			✔	✔		✔
0.13	R13			✔	✔		✔
0.15	R15			✔	✔		✔
0.20	R20			✔	✔		✔
0.25	R25			✔	✔		✔
0.30	R30			✔	✔		✔
0.33	R33			✔	✔		✔
0.50	R50			✔	✔		✔
0.75	R75			✔	✔		✔
1	1R0	✔	✔	✔	✔	✔	✔
1.5	1R5	✔	✔	✔	✔	✔	✔
2	2R0	✔	✔	✔	✔	✣	✔
2.2	2R2	✔	✔	✔	✔	✣	✔
3	3R0	✔	✔	✔	✔	✔	✔
4	4R0	✔	✣	✔	✔	✣	✔
5	5R0	✔	✔	✔	✔	✣	✔
7.5	7R5	✔	✔	✔	✔	✣	✔
10	10R	✔	✔	✔	✔	✣	✔
12	12R	✣	✣	✔	✔	✣	✔
15	15R	✔	✣	✔	✣	✔	✔
18	18R	✔	✣	✔	✔	✣	✔
20	20R	✔	✔	✔	✔	✣	✔
22	22R	✔	✔	✔	✔	✣	✔
25	25R	✣	✔	✔	✔	✣	✔
27	27R	✔	✔	✔	✔	✣	✣
30	30R	✔	✔	✔	✔	✣	✔
33	33R	✔	✔	✔	✔	✔	✔
35	35R	✣	✣	✣	✔	✣	✣
39	39R	✔	✔	✔	✣	✣	✔
40	40R	✔	✣	✔	✔	✣	✔
47	47R	✔	✔	✔	✔	✣	✔
50	50R	✔	✔	✔	✔	✔	✔
56	56R	✣	✔	✔	✔	✣	✣

Ohmic value	Part No. Prefix ➤ Suffix ▼	Wattage 1 21J	2 22J	3 23J	5 25J	7 27J	10 20J
62	62R	✣	✣	✔	✔	✣	✔
68	68R	✔	✔	✔	✔	✣	✔
75	75R	✔	✔	✔	✔	✣	✔
82	82R	✔	✔	✔	✔	✣	✔
100	100	✔	✣	✔	✔	✔	✔
120	120	✔	✔	✔	✔	✣	✔
125	125	✣	✣	✔	✔	✔	✔
150	150	✔	✔	✔	✔	✣	✔
180	180	✔	✔	✔	✔	✣	✔
200	200	✔	✔	✔	✔	✔	✔
220	220	✔	✔	✔	✔	✣	✔
225	225	✣	✣	✣	✣	✣	✣
250	250	✔	✔	✔	✔	✣	✔
270	270	✔	✔	✔	✔	✣	✣
300	300	✔	✔	✔	✔	✣	✔
330	330	✔	✔	✔	✔	✣	✔
350	350	✣	✔	✣	✔	✣	✔
390	390	✔	✣	✔	✣	✣	✣
400	400	✣	✣	✔	✔	✣	✔
450	450	✣	✣	✣	✔	✣	✔
470	470	✔	✔	✔	✔	✣	✔
500	500	✔	✔	✔	✔	✔	✔
560	560	✔	✔	✔	✔	✣	✣
600	600	✔	✔	✔	✔	✣	✔
680	680	✔	✣	✔	✔	✣	✔
750	750	✔	✔	✔	✔	✣	✔
800	800	✔	✣	✔	✔	✣	✣
820	820	✔	✔	✔	✔	✣	✔
900	900	✣	✔	✔	✔	✣	✣
1,000	1K0	✔	✔	✔	✔	✔	✔
1,100	1K1	✣	✣	✔	✔	✣	✔
1,200	1K2	✔	✔	✔	✔	✣	✔
1,500	1K5	✔	✔	✔	✔	✣	✔

Ohmic value	Part No. Prefix ➤ Suffix ▼	Wattage 1 21J	2 22J	3 23J	5 25J	7 27J	10 20J
1,800	1K8	✔	✔	✔	✣	✣	✣
2,000	2K0	✣	✔	✔	✔	✣	✔
2,200	2K2	✔	✔	✔	✔	✣	✔
2,500	2K5	✔	✔	✔	✔	✣	✔
2,700	2K7	✔	✔	✔	✣	✣	✔
3,000	3K0	✔	✔	✔	✔	✣	✔
3,300	3K3			✔	✔	✣	✣
3,500	3K5			✣	✔	✣	✣
3,900	3K9			✔	✔	✣	✔
4,000	4K0			✔	✔	✣	✔
4,500	4K5			✣	✔	✣	✣
4,700	4K7			✔	✔	✣	✔
5,000	5K0			✔	✔	✔	✔
6,000	6K0			✔	✔	✔	✔
6,800	6K8			✔	✔	✣	✣
7,000	7K0			✔	✔	✣	✣
7,500	7K5			✔	✔	✣	✔
8,000	8K0			✔	✔	✣	✔
9,000	9K0			✔	✣	✣	✣
10,000	10K			✔	✔	✣	✔
12,000	12K				✔	✣	✔
13,000	13K					✣	✔
15,000	15K				✔	✣	✔
17,000	17K					✣	✣
20,000	20K				✔	✔	✔
22,000	22K				✔	✣	✣
25,000	25K				✔	✣	✔
30,000	30K						✔
33,000	33K						✣
35,000	35K						✣
40,000	40K						✔
50,000	50K						✔

✔ = Standard values

✣ = Non-standard values subject to minimum handling charge per item

Shaded values involve very fine resistance wire and should not be used in critical applications without burn-in and/or thermal cycling.

40 Series

Ohmicone® Silicone-Ceramic Conformal Axial Term. Wirewound, 1% and 5% Tol. Std.

RoHS Compliant

FEATURES

- Economical
- Applications include commercial, industrial and communications equipment
- Stability under high temperature conditions
- All-welded construction
- RoHS compliant; add "E" suffix to part number to specify.

SPECIFICATIONS

Material

Coating: Conformal silicone-ceramic.

Core: Ceramic.

Terminals: Solder-coated copper clad axial. RoHS solder composition is 96% Sn, 3.5% Ag, 0.5% Cu

Derating

Linearly from
100% @ +25°C to
0% @ +275°C.

Electrical

Tolerance: ±5% (J type), ±1% (F type) (other tolerances available).

Power rating: Based on 25°C free air rating (other wattages available).

Overload: Under 5 watts: 5 times rated wattage for 5 seconds. 5 watts and over: 10 times rated wattage for 5 seconds.

Temperature coefficient: Under 1Ω: ±90 ppm/°C
1Ω to 9.99Ω: ±50 ppm/°C
10Ω and over: ±20 ppm/°C

ORDERING INFO

40 Series Ohmicone® Silicone Ceramic Conformal Axial Term. Wirewound

Non-Inductive Winding Optional (blank = std. winding)

RoHS Compliant

41 N J R 10 E

Wattage	Tolerance	Resistance Value
1 = 1W	F = 1%	R10 = 0.10Ω
2	J = 5%	1R0 = 1.0Ω
3		10R = 10.0Ω
5		250 = 250Ω
7		1K0 = 1,000Ω
0 = 10W		4K5 = 4,500Ω
		50K = 50,000Ω

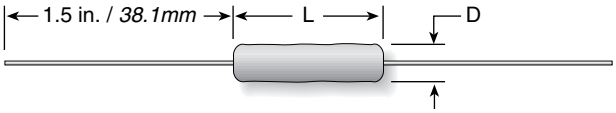

Series	Wattage	Ohms	Dimensions (in. / *mm*) Length	Diam.	Voltage	Lead ga.
41	1.0	0.10-6K	0.437 / *11.1*	0.125 / *3.2*	150	24
42	2.0	0.10-8K	0.406 / *10.3*	0.219 / *5.6*	100	20
43	3.0	0.10-20K	0.593 / *15.1*	0.219 / *5.6*	200	20
45	5.0	0.10-70K	0.937 / *23.8*	0.343 / *8.7*	460	18
47	7.0	0.10-80K	1.280 / *32.5*	0.343 / *8.7*	670	18
40	10.0	0.10-150K	1.900 / *48.3*	0.406 / *10.3*	1000	18

Non-Inductive versions available. Insert "N" before tolerance code. Example: 42NJ27R

Ohmite 40 Series resistors are the most economical conformal silicone-ceramic coated resistors offered. These all-welded units are characterized by their low temperature coefficients and resistance to thermal shock, making them ideal for a wide range of electrical and electronic applications.

Units with 1% and 5% tolerances are identical in construction and electrical specifications. Durable but economical 40 Series resistors exceed industry requirements for quality.

STANDARD PART NUMBERS FOR 40 SERIES

Wattage and Tolerance — 1% Tolerance: 1, 3, 5, 10; 5% Tolerance: 1, 2, 3, 5, 10

Ohmic value	Part No. (Prefix ➤ / Suffix ▼)	41F	43F	45F	40F	41J	42J	43J	45J	40J
0.1	R10	✔	✔	✔	✔	✔	✔	✔	✔	✔
0.15	R15	✔	✔	✔	✔	✔	✔	✔	✔	✔
0.2	R20	✔	✔	✔	✔	✔	✔	✔	✔	✔
0.25	R25					✔		✔	✔	
0.3	R30	✔	✔	✔	✔	✔	✔	✔	✔	✔
0.33	R33					✔		✔	✔	
0.4	R40		✔	✔	✔	✔	✔	✔	✔	✔
0.5	R50	✔	✔	✔	✔	✔	✔	✔	✔	✔
0.75	R75	✔	✤	✔	✔	✔	✔	✔	✔	✔
1	1R0	✔	✔	✔	✔	✔	✔	✔	✔	✔
1.5	1R5	✔	✔	✔	✔	✔	✔	✔	✔	✔
2	2R0	✔	✔	✔	✔	✔	✔	✔	✔	✔
2.2	2R2	✔	✔	✔	✔	✔	✔	✔	✔	✔
3	3R0	✔	✔	✔	✤	✔	✔	✔	✔	✔
4	4R0	✔	✔	✔	✔	✔	✔	✔	✔	✔
5	5R0	✔	✔	✔	✔	✔	✔	✔	✔	✔
7.5	7R5	✔	✔	✔	✔	✤	✔	✔	✔	✔
10	10R	✔	✔	✔	✔	✔	✔	✔	✔	✔
12	12R	✤	✔	✤	✔	✔	✔	✔	✔	✔
15	15R	✔	✔	✔	✤	✔	✤	✔	✔	✔
18	18R	✤	✔	✤	✤	✤	✤	✔	✔	✔
20	20R	✔	✔	✔	✔	✤	✔	✔	✔	✔
22	22R	✔	✔	✔	✤	✔	✔	✔	✔	✔
25	25R	✔	✔	✔	✤	✤	✔	✔	✔	✔
27	27R	✤	✔	✔	✔	✤	✔	✔	✔	✔
30	30R	✔	✔	✔	✔	✤	✔	✤	✔	✔
33	33R	✔	✔	✤	✔	✤	✔	✔	✔	✔
35	35R	✔	✤	✔	✔	✔	✔	✤	✔	✤
39	39R	✔	✔	✤	✤	✤	✔	✔	✔	✤
40	40R	✔	✔	✔	✔	✤	✤	✤	✔	✔
47	47R	✔	✔	✤	✤	✔	✔	✔	✔	✔
50	50R	✔	✔	✔	✔	✔	✔	✔	✔	✔
56	56R	✔	✔	✤	✔	✔	✔	✔	✔	✔
62	62R	✔	✔	✔	✔	✤	✔	✤	✔	✔

Wattage and Tolerance — 1% Tolerance: 1, 3, 5, 10; 5% Tolerance: 1, 2, 3, 5, 10

Ohmic value	Part No. (Prefix ➤ / Suffix ▼)	41F	43F	45F	40F	41J	42J	43J	45J	40J
68	68R	✔	✔	✔	✔	✔	✔	✔	✔	✤
75	75R	✔	✔	✤	✔	✔	✔	✔	✔	✔
82	82R	✤	✔	✔	✔	✔	✔	✔	✔	✤
100	100	✔	✔	✔	✔	✔	✔	✔	✔	✔
120	120	✤	✔	✔	✔	✤	✔	✔	✔	✤
125	125	✔	✤	✤	✔	✔	✤	✔	✔	✔
150	150	✔	✔	✔	✤	✔	✔	✔	✔	✔
180	180	✔	✔	✤	✔	✤	✔	✔	✔	✤
200	200	✔	✔	✔	✔	✔	✔	✔	✔	✔
220	220	✔	✔	✤	✤	✔	✤	✔	✔	✔
225	225	✤	✤	✤	✔	✤	✤	✤	✔	✤
250	250	✔	✔	✔	✔	✔	✔	✔	✔	✔
270	270	✔	✔	✤	✔	✔	✔	✤	✔	✔
300	300	✔	✤	✔	✔	✔	✔	✔	✔	✔
330	330	✔	✤	✤	✤	✤	✔	✔	✔	✔
350	350	✤	✔	✤	✔	✤	✤	✔	✔	✤
390	390	✤	✔	✤	✤	✔	✔	✔	✔	✔
400	400	✔	✔	✔	✤	✔	✤	✔	✔	✔
450	450	✤	✔	✔	✤	✤	✤	✤	✤	✤
470	470	✔	✔	✔	✤	✔	✔	✔	✔	✤
500	500	✔	✔	✔	✔	✤	✔	✔	✔	✤
560	560	✔	✔	✔	✔	✔	✤	✤	✔	✔
600	600	✔	✔	✔	✔	✤	✤	✔	✔	✔
680	680	✔	✔	✤	✔	✔	✔	✔	✔	✤
750	750	✔	✔	✔	✔	✔	✤	✔	✔	✤
800	800	✔	✔	✔	✔	✤	✤	✔	✤	✤
820	820	✔	✔	✔	✤	✔	✔	✔	✔	✤
900	900	✔	✔	✤	✤	✤	✤	✔	✔	✤
1,000	1K0	✔	✔	✔	✔	✔	✔	✔	✔	✔
1,100	1K1	✤	✤	✔	✔	✤	✔	✤	✔	✤
1,200	1K2	✔	✤	✔	✔	✤	✤	✔	✔	✔
1,500	1K5	✔	✔	✔	✤	✔	✔	✔	✤	✔
1,800	1K8	✔	✤	✤	✔	✔	✤	✔	✔	✤
2,000	2K0	✔	✔	✔	✔	✤	✤	✔	✔	✔

Wattage and Tolerance — 1% Tolerance: 1, 3, 5, 10; 5% Tolerance: 1, 2, 3, 5, 10

Ohmic value	Part No. (Prefix ➤ / Suffix ▼)	41F	43F	45F	40F	41J	42J	43J	45J	40J
2,200	2K2	✔	✔	✔	✔	✤	✤	✔	✔	✔
2,500	2K5	✔	✔	✔	✔	✔	✤	✔	✔	✔
2,700	2K7	✤	✤	✔	✔	✤	✤	✔	✔	✤
3,000	3K0	✔	✔	✔	✔	✤	✔	✔	✔	✔
3,300	3K3		✤	✤	✤			✔	✔	✤
3,500	3K5		✔	✔	✤			✤	✔	✤
3,900	3K9		✔	✔	✔			✔	✔	✔
4,000	4K0		✔	✤	✔			✤	✔	✤
4,500	4K5		✤	✤	✔			✤	✔	✤
4,700	4K7		✔	✔	✤			✤	✔	✤
5,000	5K0		✔	✔	✔			✔	✔	✔
6,000	6K0		✤	✔	✤			✔	✔	✤
6,800	6K8		✔	✔	✤			✔	✔	✤
7,000	7K0		✔	✔	✤			✤	✤	✤
7,500	7K5		✔	✔	✤			✔	✔	✔
8,000	8K0		✔	✤	✔			✤	✔	✤
9,000	9K0		✤	✔	✤			✤	✤	✤
10,000	10K		✔	✔	✔			✔	✔	✔
12,000	12K			✤	✔					
13,000	13K			✔	✤					
15,000	15K			✔	✔					
17,000	17K			✔	✤					
20,000	20K			✔	✔					
22,000	22K			✔	✔					
25,000	25K			✔	✔					
30,000	30K			✔	✤					
33,000	33K				✔					
35,000	35K				✤					
40,000	40K				✔					
50,000	50K				✔					

Shaded values involve very fine resistance wire and should not be used in critical applications without burn-in and/or thermal cycling.

✔ = Standard values

✤ = Non-standard values subject to minimum handling charge per item

Check product availability at **www.ohmite.com**

80 Series

Commercial Grade Acrasil®, Silicone-Ceramic Conformal Axial Terminal Wirewound 1% Tol. (5% avail.)

RW Series

Military Grade 80 Series MIL-R-26 Qualified

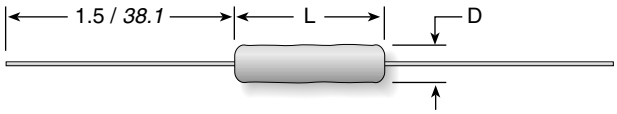

Comm. Grade	Military Grade	Watts	Ohms	Dimensions (in. / *mm*) Length	Diam.	Voltage	Lead ga.
81F	**RW70U**	1	0.1-6K	0.437 / *11.1*	0.125 / *3.2*	150	24
82		2	0.1-8K	0.406 / *10.3*	0.219 / *5.6*	100	20
83F **83J**	**RW79U** **RW69V**	3	0.1-20K	0.593 / *15.1*	0.218 / *5.5*	200	20
85F **85J**	**RW74U** **RW67V**	5	0.1-75K	0.937 / *23.8*	0.343 / *8.7*	460	18
80F **80J**	**RW78U** **RW68V**	10	0.1-150K	1.842 / *46.8*	0.406 / *10.3*	1000	18

Non-Inductive versions available. Insert "N" before tolerance code. Example: 83NF2K21

Ohmite's highest quality conformal axial terminal silicone-ceramic coated resistors for applications requiring high precision and stability. These resistors have a low temperature coefficient and maintain a high degree of stability under demanding conditions.

FEATURES

- Designed for precision power applications
- All-welded construction
- RW Series "Mil" value resistors marked with "Mil" in accordance with MIL-R-26 specifications

SPECIFICATIONS

Material

Coating: Silicone-ceramic.

Core: Ceramic.

Terminals: Solder-coated copper clad axial.

Derating: Linearly from 100% @ +25°C to 0% @ +275°C.

Electrical

Tolerance: ±5% (J type), ±1% (F type) (other tolerances available).

Power rating: Based on 25°C free air rating.

Maximum ohmic values: See chart.

Overload: Under 5 watts: 5 times rated wattage for 5 seconds. 5 watts and over: 10 times rated wattage for 5 seconds.

Temperature coefficient:
Under 1Ω: ±90 ppm/°C
1 to 9.99Ω: ±50 ppm/°C
10Ω and over: ±20 ppm/°C

Dielectric withstanding voltage:
500 VAC: 1 watt rating
1000 VAC: 2, 3, 5, 7 and 10 watt rating

ORDERING INFORMATION

Commercial Grade

Non-Inductive Winding Optional (blank = std. winding)

81 N J R10

80 Series Acrasil® Silicone Ceramic Conformal Axial Term. Wirewound

Wattage 1 = 1W, 2, 3, 5, 0 = 10W

Tolerance F = 1%, J = 5%

Resistance Value R10 = 0.10Ω, 1R0 = 1.0Ω, 10R = 10.0Ω, 250 = 250Ω, 1K0 = 1,000Ω, 4K5 = 4,500Ω, 50K = 50,000Ω

Military Grade

RW 74 U 1001 F

RW Series Military grade

Resistance Value R100 = 0.1Ω, 1R00 = 1.0Ω, 10R0 = 10.0Ω, 1000 = 100Ω, 1001 = 1000Ω, 1002 = 10KΩ, 1503 = 150KΩ

Tolerance F = 1%, J = 5%

This product will not be made available as RoHS Compliant.

For RoHS Compliant equivalent, see **40 Series.**

COMMERCIAL GRADE PART NUMBERS

Ohmic value	Part No. Prefix ➤ Suffix ▼	Wattage 1 / 81F	3 / 83F	5 / 85F	10 / 80F
0.1	R10	✔	✔	✔	✔
0.11	R11		✔	✔	✔
0.121	R121	✔	✔	✔	✔
0.133	R133		✔	✤	✔
0.15	R15	✔	✔	✔	✔
0.162	R162		✤	✤	✔
0.182	R182	✔	✔	✔	✔
0.2	R20	✔	✔	✔	✔
0.221	R221		✔	✔	✔
0.249	R249	✔	✔	✔	✔
0.274	R274		✔	✔	✔
0.301	R301	✔	✔	✔	✔
0.332	R332		✔	✤	✔
0.374	R374		✔	✤	✔
0.392	R392		✔	✔	✔
0.402	R402	✔	✔	✔	✔
0.453	R453		✔	✔	✔
0.499	R499	✔	✔	✔	✔
0.511	R511		✔	✤	✤
0.562	R562	✔	✔	✔	✔
0.619	R619		✔	✔	✔
0.681	R681	✔	✔	✔	✔
0.75	R75		✤	✔	✔
0.825	R825	✔	✔	✔	✔
0.909	R909		✔	✤	✔
1	1R0	✔	✔	✔	✔
1.1	1R1		✔	✔	✔
1.21	1R21	✔	✔	✔	✔
1.330	1R33		✤	✔	✔
1.5	1R5	✔	✔	✔	✔
1.62	1R62		✤	✔	✔
1.82	1R82	✔	✔	✔	✔
2	2R0	✔	✔	✔	✔

Ohmic value	Part No. Prefix ➤ Suffix ▼	Wattage 1 / 81F	3 / 83F	5 / 85F	10 / 80F
2.21	2R21		✔	✔	✔
2.49	2R49	✔	✔	✔	✔
2.74	2R74		✔	✔	✔
3.01	3R01	✔	✔	✔	✔
3.32	3R32		✔	✔	✔
3.74	3R74		✔	✔	✔
4.02	4R02	✔	✔	✔	✔
4.53	4R53		✔	✔	✔
4.99	4R99	✔	✔	✔	✔
5.11	5R11		✔	✔	✔
5.62	5R62	✔	✔	✔	✔
6.19	6R19		✔	✔	✔
6.81	6R81	✔	✔	✔	✔
7.5	7R5		✔	✔	✔
8.25	8R25	✔	✔	✤	✔
9.09	9R09		✔	✔	✔
10	10R	✔	✔	✔	✔
11	11R		✔	✔	✔
12.1	12R1	✔	✔	✔	✔
13.3	13R3		✤	✤	✤
15	15R	✔	✔	✔	✤
16.2	16R2		✤	✤	✤
18.2	18R2	✔	✔	✔	✔
20	20R	✔	✔	✔	✔
22.1	22R1		✔	✔	✔
24.9	24R9	✔	✔	✔	✔
27.4	27R4		✔	✔	✔
30.1	30R1	✔	✔	✔	✔
33.2	33R2		✔	✔	✔
37.4	37R4		✔	✤	✔
40.2	40R2	✔	✔	✔	✔
45.3	45R3		✔	✔	✔
49.9	49R9	✔	✔	✔	✔

Ohmic value	Part No. Prefix ➤ Suffix ▼	Wattage 1 / 81F	3 / 83F	5 / 85F	10 / 80F
51.1	51R1		✔	✔	✔
56.2	56R2	✔	✔	✔	✔
61.9	61R9		✔	✔	✔
68.1	68R1	✔	✔	✔	✔
75	75R		✔	✤	✔
82.5	82R5	✔	✔	✔	✔
90.9	90R9		✔	✔	✔
100	100	✔	✔	✔	✔
110	110		✔	✔	✔
121	121	✔	✔	✔	✔
133	133		✤	✔	✤
150	150	✔	✔	✔	✤
162	162		✔	✔	✔
182	182	✔	✔	✔	✔
200	200	✔	✔	✔	✔
221	221		✔	✔	✔
249	249	✔	✔	✔	✔
274	274		✔	✤	✔
301	301	✔	✔	✔	✔
332	332		✔	✔	✔
374	374		✔	✔	✔
402	402	✔	✔	✔	✔
453	453		✔	✔	✔
499	499	✔	✔	✔	✔
511	511		✔	✔	✔
562	562	✔	✔	✔	✔
619	619		✔	✔	✔
681	681	✔	✔	✔	✔
750	750		✔	✔	✔
825	825	✔	✔	✔	✔
909	909		✔	✔	✔
1,000	1K0	✔	✔	✔	✔
1,100	1K1		✤	✔	✔

Ohmic value	Part No. Prefix ➤ Suffix ▼	Wattage 1 / 81F	3 / 83F	5 / 85F	10 / 80F
1,210	1K21	✔	✔	✔	✔
1,330	1K33		✤	✔	✤
1,500	1K5	✔	✔	✔	✤
1,620	1K62		✔	✤	✤
1,820	1K82	✔	✔	✔	✔
2,000	2K0	✔	✔	✔	✔
2,210	2K21		✔	✔	✔
2,490	2K49	✔	✔	✔	✔
2,740	2K74		✔	✔	✔
3,010	3K01	✔	✔	✔	✔
3,320	3K32		✔	✔	✔
3,740	3K74		✔	✔	✔
4,020	4K02		✔	✔	✔
4,530	4K53		✔	✤	✔
4,990	4K99		✔	✔	✔
5,110	5K11		✔	✔	✔
5,620	5K62		✔	✔	✔
6,190	6K19		✔	✔	✔
6,810	6K81		✔	✔	✔
7,500	7K5		✔	✔	✤
8,250	8K25		✔	✔	✔
9,090	9K09		✤	✔	✤
10,000	10K		✔	✔	✔
10,500	10K5		✔	✤	✤
11,000	11K		✔	✤	✤
12,100	12K1		✤	✤	✤
13,300	13K3		✤	✔	✤
15,000	15K		✔	✔	✔
16,200	16K2		✤	✔	✤
18,200	18K2		✤	✔	✤
20,000	20K		✔	✔	✔
22,100	22K1			✔	✔
24,900	24K9			✔	✔

Ohmic value	Part No. Prefix ➤ Suffix ▼	Wattage 5 / 85F	10 / 80F
27,400	27K4	✔	✔
30,100	30K1	✔	✔
33,200	33K2	✔	✔
37,400	37K4	✤	✤
38,300	38K3	✔	✤
40,200	40K2	✔	✔
45,300	45K3	✔	✔
49,900	49K9	✔	✔
51,100	51K1	✔	✔
56,200	56K2	✔	✔
61,900	61K9	✔	✤
68,100	68K1	✔	✔
75,000	75K	✔	✔
82,500	82K5		✔
90,900	90K9		✔
100,000	100K		✔
150,000	150K		✔
200,000	200K		✔

✔ = Standard values

✤ = Non-standard values subject to minimum handling charge per item

Shaded values involve very fine resistance wire and should not be used in critical applications without burn-in and/or thermal cycling.

Check product availability at **www.ohmite.com**

1-866-9-OHMITE • Int'l 1-847-258-0300 • Fax 1-847-574-7522 • www.ohmite.com • info@ohmite.com

89 Series

Metal-Mite® Aluminum Housed Axial Term. Wirewound, 1% Tolerance

The 89 Series is a high-performance axial type resistor. These molded-construction metal-housed resistors are available in higher power ratings than standard axial resistors and are better suited to withstanding vibration, shock and harsh environmental conditions.

The 89 Series Metal-Mite® resistors are aluminum housed to maintain high stability during operation and to permit secure mounting to chassis surfaces.

The metal housing also provides heat-sinking capabilities.

FEATURES

- High Stability: ±0.5% ΔR.
- High power to size ratio.
- Metal housing allows chassis mounting and provides heat sink capability.

As of September 2006, the 89 Series is no longer offered as Mil. Spec.

SPECIFICATIONS

Material

Housing: Metal, anodized aluminum.

Internal Coating: Silicone.

Core: Ceramic.

Terminals: Solder-coated axial.

Derating: Linearly from 100% @ +25°C to 0% @ +275°C.

Electrical

Tolerance: ±1% and ±5% (other tolerances available).

Power rating: Rating is based on chassis mounting area and temperature stability. Proper heat sink as follows: 5W and 10W units, 4" x 6" x 2" x .040" Aluminum chassis; 25W units, 5" x 7" x 2" x .040" Aluminum chassis; 50W units, 12" x 12" x .059" Aluminum panel.

Maximum ohmic values: See chart.

Overload: 5 times rated wattage for 5 seconds.

Temperature coefficient:
Under 1Ω: ±90 ppm/°C
1 to 9.99Ω: ±50 ppm/°C
10Ω and over: ±20 ppm/°C.

Dielectric withstanding voltage: 5W and 10W rating,1000 VAC; 25 and 50W ratings, 2250 VAC.

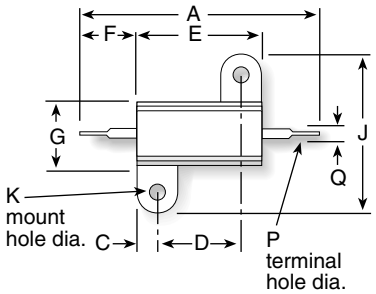

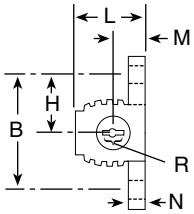

Series	Wattage	Ohms	Voltage
805	5	0.10-25K	210
810	10	0.10-50K	320
825	25	0.005-75K	520
850	50	0.005-100K	1170

Non-Inductive versions available. Insert "N" before tolerance code. Example: 850NF560

	5 watt	10 watt	25 watt	50 watt
Series (Industrial)	**805**	**810**	**825**	**850**
	Dimensions			
Dim. A (in. ±0.062 / mm ±1.57)	1.125 / 28.59	1.375 / 34.93	1.938 / 49.23	2.781 / 70.64
Dim. B (in. ±0.010 / mm ±0.25)	0.490 / 12.45	0.625 / 15.88	0.781 / 19.84	0.844 / 21.44
Dim. C (in. ±0.031 / mm ±0.79)	0.078 / 1.98	0.094 / 2.39	0.172 / 4.37	0.188 / 4.78
Dim. D (in. ±0.010 / mm ±0.25)	0.444 / 11.28	0.562 / 14.28	0.719 / 18.26	1.562 / 39.68
Dim. E (in. ±0.062 / mm ±1.57)	0.600 / 15.24	0.750 / 19.05	1.062 / 26.98	1.938 / 49.23
Dim. F (in. ±0.062 / mm ±1.57)	0.266 / 6.76	0.312 / 7.93	0.438 / 11.13	0.438 / 11.13
Dim. G (in. ±0.062 / mm ±1.57)	0.334 / 8.48	0.438 / 11.13	0.531 / 13.49	0.594 / 15.09
Dim. H (in. ±0.031 / mm ±0.79)	0.245 / 6.22	0.312 / 7.93	0.391 / 9.93	0.422 / 10.72
Dim. J (in. ±0.031 / mm ±0.79)	0.646 / 16.41	0.812 / 20.63	1.094 / 27.79	1.156 / 29.36
Dim. K (in. ±0.005 / mm ±0.13)	0.093 / 2.36	0.094 / 2.39	0.125 / 3.18	0.125 / 3.18
Dim. L (in. ±0.031 / mm ±0.79)	0.320 / 8.13	0.406 / 10.31	0.562 / 14.28	0.625 / 15.88
Dim. M (in. ±0.062 / mm ±1.57)	0.133 / 3.38	0.203 / 5.16	0.281 / 7.14	0.312 / 7.92
Dim. N (in. ±0.031 / mm ±0.79)	0.065 / 1.65	0.094 / 2.39	0.094 / 2.39	0.094 / 2.39
Dim. P (in. ±0.005 / mm ±0.13)	0.050 / 1.27	0.085 / 2.16	0.085 / 2.16	0.085 / 2.16
Q min AWG	16	12	12	12
Dim. R (in., min/mm, min)	0.085/ 2.16	0.140/ 3.56	0.140/ 3.56	0.140/ 3.56

ORDERING INFORMATION

Non-Inductive Winding
Optional (blank = std. winding)

805NF5R0E

Series
805 = 5 Watt
810 = 10 watt
825 = 25 watt
850 = 50 watt

Tolerance
F = 1%
J = 5%

Ohms
R005= 0.005Ω
R10 = 0.1Ω
1R0 = 1.0Ω
250 = 250Ω
1K0 = 1,000Ω
1K5 = 1,500Ω
25K = 25,000Ω

RoHS Compliant

STANDARD PART NUMBERS

Ohmic value	Part No. Prefix ➤ Suffix ▼	Wattage 5 805F	10 810F	25 825F	50 850F
0.005	R005			✔	✔
0.010	R010			✔	✔
0.025	R025			✔	✔
0.1	R10			✔	✔
0.3	R30			✔	✣
0.5	R50			✔	✣
0.7	R70			✣	✣
1.0	1R0	✔	✔	✔	✔
1.5	1R5	✣	✔		
2.0	2R0	✣	✔	✔	✔
3.0	3R0	✔	✔	✔	✔
4.0	4R0	✣	✔		
5.0	5R0	✔	✔	✔	✔
10.0	10R	✔	✔	✔	✔
15.0	15R	✔	✔	✔	✔

Ohmic value	Part No. Prefix ➤ Suffix ▼	Wattage 5 805F	10 810F	25 825F	50 850F
20	20R	✔	✔		
25	25R	✔	✔	✔	✔
30	30R	✣	✣		
40	40R	✣	✔		
50	50R	✔	✔	✔	✔
75	75R	✔	✣	✔	✔
100	100	✔	✔	✔	✔
150	150	✔	✔	✔	✔
200	200	✣	✣	✔	✔
250	250	✔	✔	✔	✔
300	300	✔	✣		
400	400	✣	✣		
500	500	✔	✣	✔	✔
750	750	✣	✣	✔	✔
1,000	1K0	✣	✔	✔	✔

Ohmic value	Part No. Prefix ➤ Suffix ▼	Wattage 5 805F	10 810F	25 825F	50 850F
1,500	1K5	✔	✣	✣	✔
2,000	2K0	✔	✔	✣	✣
2,500	2K5	✔	✔		
3,000	3K0	✣	✔	✔	✣
3,500	3K5	✣	✣		
4,000	4K0	✔	✔		
4,500	4K5	✣	✣		
5,000	5K0	✔	✔	✔	✔
6,000	6K0	✣	✣		
10,000	10K	✔	✣	✔	✔
15,000	15K	✔	✔	✣	✣
20,000	20K	✣	✣		
25,000	25K	✔	✣	✣	✣
50,000	50K		✣		
75,000	75K			✣	
100,000	100K				✣

✔ = Standard values

✣ = Non-standard values subject to minimum handling charge per item

Shaded values involve very fine resistance wire and should not be used in critical applications without burn-in and/or thermal cycling.

Check product availability at **www.ohmite.com**

90 Series

Lead Free Vitreous Enamel Molded Axial Term. Wirewound, 5% Tolerance Standard

When you need the highest quality wirewound axial terminal resistors available, choose Ohmite's 90 Series resistors.

They are manufactured by a unique process that molds the vitreous enamel over the resistive element, helping to ensure consistent dimensions. This uniformity permits 90 Series resistors to be mounted in clips, creating a heat-sinking benefit (see next page).

The durable vitreous enamel coating, which is totally lead free, permits the 90 Series resistors to maintain a hard coating while operating at high temperatures. Mechanical integrity is enhanced by the all-welded construction.

FEATURES

- Molded Construction provides consistent shape and size (Permits mounting in clips which extends power rating).
- Meets MIL-R-26 requirements for insulated resistors.
- All-welded construction.
- Flame resistant lead free vitreous enamel coating.
- Higher ratings in smaller sizes.
- Heat sink mounting clips available.
- RoHS compliant; add "E" suffix to part number to specify.

SPECIFICATIONS

Material

Coating: Molded lead free vitreous enamel.

Core: Ceramic.

Terminals: Solder-coated copper clad axial. RoHS solder composition is 96% Sn, 3.5% Ag, 0.5% Cu

Derating: Linearly from 100% @ +25°C to 0% @ +350°C.

Electrical

Tolerance: ±5% (other tolerances available).

Power rating: Based on 25°C free air rating. (other wattages available*).

Maximum ohmic values: See chart.

Overload:

Under 11 watts: 5 times rated wattage for 5 seconds.

11 watts: 10 times rated wattage for 5 seconds.

Temperature coefficient:

1 to 9.99Ω: ±100 ppm/°C

10Ω and over: ±30 ppm/°C

Dielectric withstanding voltage:

500 VAC: 1W rating

1000 VAC: 2, 3, 5 and 11W

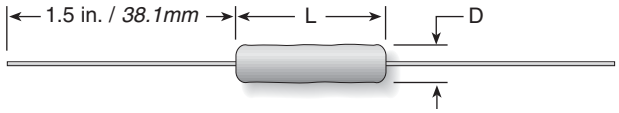

Series	Wattage*	Ohms	Dimensions (in. / *mm*) Length	Diam.	Voltage	Lead ga.
91	1.5	0.1Ω-3.6K	0.452 / *11.5*	0.140 / *3.6*	150	24
92	2.25	0.1Ω-3.5K	0.405 / *10.3*	0.219 / *5.6*	85	20
93	3.25	0.1Ω-10.5K	0.577 / *14.7*	0.234 / *5.9*	200	20
95	5.0	0.1Ω-25K	0.968 / *24.6*	0.265 / *6.7*	495	20
96	6.5	0.1Ω-50K	0.952 / *24.2*	0.343 / *8.7*	625	20
90	11.0	0.1Ω-91K	1.811 / *46.0*	0.343 / *8.7*	1080	20

* 2x power ratings by using heat-sink mounting clips shown on following page.

Note: Due to space restrictions, parts are stamped with wattage ratings reduced to the nearest whole number. The actual wattage ratings are as published in this catalog.

ORDERING INFORMATION

Non-Inductive Winding Optional (blank = std. winding)

RoHS Compliant

91 N J R10 E

90 Series Series-Lead Free Vitreous Enamel Molded Axial Term. Wirewound

Wattage
1 = 1.5W
2 = 2.25W
3 = 3.25W
5 = 5W
0 = 11W

Tolerance
J = 5%

Resistance Value
1R0 = 1.0Ω
10R = 10.0Ω
250 = 250Ω
1K0 = 1,000Ω
4K5 = 4,500Ω
51K = 51,000Ω

STANDARD PART NUMBERS FOR 90 SERIES

Ohmic value	Part No. Prefix ➤ Suffix ▼	1.5 91J	2.25 92J	3.25 93J	5 95J	11 90J
1	1R0	✔	✔	✔	✔	✔
1.1	1R1	✔	✣	✣	✔	✣
1.2	1R2	✔	✔	✔	✔	✣
1.3	1R3	✣	✔	✔	✣	✔
1.5	1R5	✔	✔	✔	✔	✔
1.6	1R6	✣	✣	✣	✣	✣
1.8	1R8	✔	✣	✣	✔	✔
2	2R0	✔	✔	✔	✔	✔
2.2	2R2	✔	✔	✔	✔	✔
2.4	2R4	✔	✣	✔	✔	✔
2.7	2R7	✔	✔	✔	✔	✔
3	3R0	✔	✔	✔	✔	✔
3.3	3R3	✔	✔	✔	✔	✔
3.6	3R6	✣	✣	✣	✔	✣
3.9	3R9	✔	✔	✔	✔	✔
4	4R0	✔	✔	✔	✔	✔
4.3	4R3	✣	✔	✣	✔	✔
4.7	4R7	✔	✔	✔	✔	✔
5	5R0	✔	✔	✔	✔	✔
5.1	5R1	✣	✔	✔	✣	✣
5.6	5R6	✔	✔	✔	✔	✔
6.2	6R2	✣	✔	✔	✔	✔
6.8	6R8	✔	✣	✔	✔	✔
7.5	7R5	✣	✔	✔	✔	✔
8.2	8R2	✣	✔	✔	✔	✔
9.1	9R1	✣	✣	✔	✔	✣
10	10R	✔	✔	✔	✔	✔
11	11R	✣	✣	✣	✔	✔
12	12R	✔	✔	✔	✔	✔
13	13R	✣	✣	✔	✔	✣
15	15R	✔	✔	✔	✔	✔
16	16R	✔	✣	✔	✔	✔
18	18R	✔	✔	✔	✔	✔
20	20R	✔	✔	✔	✔	✔

Ohmic value	Part No. Prefix ➤ Suffix ▼	1.5 91J	2.25 92J	3.25 93J	5 95J	11 90J
22	22R	✔	✔	✔	✔	✔
24	24R	✣	✣	✔	✔	✔
25	25R	✣	✔	✔	✔	✔
27	27R	✔	✔	✔	✔	✔
30	30R	✔	✔	✔	✔	✔
33	33R	✔	✣	✔	✔	✔
35	35R	✔	✣	✔	✔	✔
36	36R	✔	✣	✣	✔	✣
39	39R	✔	✔	✔	✔	✔
40	40R	✣	✔	✔	✔	✔
43	43R	✣	✔	✔	✔	✔
47	47R	✔	✔	✔	✔	✔
50	50R	✔	✔	✔	✔	✔
51	51R	✣	✣	✔	✔	✣
56	56R	✔	✔	✔	✔	✔
62	62R	✔	✔		✔	✔
68	68R	✔	✔	✔	✔	✔
75	75R	✔	✔	✔	✔	✔
82	82R	✔	✔	✔	✔	✔
91	91R	✔	✣	✔	✔	✔
100	100	✔	✔	✔	✔	✔
110	110	✔	✔	✔	✔	✔
120	120	✔	✔	✔	✔	✔
130	130	✣	✔	✔	✔	✔
150	150	✔	✔	✔	✔	✔
160	160	✔	✣	✔	✔	✔
180	180	✔	✔	✔	✔	✔
200	200	✔	✔	✔	✔	✔
220	220	✔	✔	✔	✔	✔
240	240	✣	✣	✔	✔	✔
250	250	✔	✔	✔	✔	✔
270	270	✔	✔	✔	✔	✔
300	300	✔	✔	✔	✔	✔
330	330	✔	✔	✔	✔	✔

Ohmic value	Part No. Prefix ➤ Suffix ▼	1.5 91J	2.25 92J	3.25 93J	5 95J	11 90J
350	350	✔	✔	✔	✔	✣
360	360	✔	✔	✔	✔	✣
390	390	✔	✔	✔	✔	✔
400	400	✔	✔	✔	✔	✔
430	430	✔	✔	✔	✔	✣
450	450	✣	✔	✔	✣	✣
470	470	✔	✔	✔	✔	✔
500	500	✔	✔	✔	✔	✔
510	510	✣	✔	✔	✔	✣
560	560	✔	✔	✔	✔	✔
600	600	✔	✣	✔	✔	✔
620	620	✔	✣	✔	✣	✣
680	680	✔	✔	✔	✔	✔
700	700	✣	✔	✔	✔	✣
750	750	✔	✔	✔	✔	✔
800	800	✔	✣	✔	✔	✔
820	820	✔	✔	✔	✔	✔
900	900	✣	✣	✔	✔	✣
910	910	✣	✣	✔	✣	✣
1,000	1K0	✔	✔	✔	✔	✔
1,100	1K1	✣	✔	✔	✣	✣
1,200	1K2	✔	✔	✔	✔	✔
1,300	1K3	✔	✔	✔	✔	✔
1,400	1K4	✣	✔	✣	✣	✔
1,500	1K5	✔	✔	✔	✔	✔
1,600	1K6	✣	✣	✔	✔	✔
1,800	1K8	✔	✔	✔	✔	✔
2,000	2K0	✔	✔	✔	✔	✔
2,200	2K2	✔	✔	✔	✔	✔
2,400	2K4	✔	✔	✔	✔	✣
2,500	2K5	✔	✔	✔	✔	✔
2,700	2K7	✣	✔	✔	✔	✔
3,000	3K0	✔	✔	✔	✔	✔
3,300	3K3			✔	✔	✔

Ohmic value	Part No. Prefix ➤ Suffix ▼	3.25 93J	5 95J	11 90J
3,500	3K5	✔	✔	✔
3,600	3K6	✔	✔	✔
3,900	3K9	✔	✔	✔
4,000	4K0	✔	✔	✔
4,300	4K3	✣	✔	✔
4,500	4K5	✔	✔	✔
4,700	4K7	✔	✔	✔
5,000	5K0	✔	✔	✔
5,100	5K1	✣	✔	✔
5,600	5K6	✔	✔	✔
6,000	6K0	✔	✔	✔
6,200	6K2	✔	✔	✣
6,800	6K8	✔	✔	✔
7,000	7K0	✔	✔	✔
7,500	7K5	✔	✔	✔
8,000	8K0	✔	✔	✔
8,200	8K2	✔	✔	✔
9,000	9K0	✔	✔	✣
9,100	9K1	✔		✣
10,000	10K	✔	✔	✔
11,000	11K		✔	✣
12,000	12K		✔	✔

Ohmic value	Part No. Prefix ➤ Suffix ▼	5 95J	11 90J
13,000	13K	✔	✣
14,000	14K	✔	✣
15,000	15K	✔	✔
16,000	16K	✔	✣
17,000	17K	✣	✣
18,000	18K	✔	✔
20,000	20K	✔	✔
22,000	22K	✔	✔
24,000	24K	✣	✣
25,000	25K	✔	✔
27,000	27K		✔
30,000	30K		✔
33,000	33K		✔
35,000	35K		✣
36,000	36K		✔
39,000	39K		✔
40,000	40K		✔
43,000	43K		✔
45,000	45K		✣
47,000	47K		✔
50,000	50K		✔
51,000	51K		✣

✔ = Standard values

✣ = Non-standard values subject to minimum handling charge per item

Shaded values involve very fine resistance wire and should not be used in critical applications without burn-in and/or thermal cycling.

Check product availability at **www.ohmite.com**

Mounting Clip
For 90 Series

FEATURES

- Prevents severe vibration or mechanical shock to resistor
- Increases resistor wattage up to 100% when mounted on metal surface (1.5 sq. in. by 0.040 in. thick min. per watt dissipated)
- Holes in clip base permit fastening to chassis surface with machine screws, eyelets or rivets
- Sold in bags of ten (10)

STANDARD PART NUMBERS FOR 90 SERIES MOUNTING CLIP

Part No.	Resistor rating (watts)	Clip length (in./*mm*)	Clip width (in./*mm*)	Clip height (in./*mm*)	No. of holes	Hole centers (in./*mm*)	Hole diameter (in./*mm*)
✔ 5900	1.5	0.40 / *10.319*	0.150 / *3.810*	0.250 / *6.350*	1		0.71 / *1.803*
✔ 5902	2.25	0.35 / *8.890*	0.217 / *5.500*	0.275 / *6.980*	2	0.156 / *3.969*	0.71 / *1.803*
✚ 5904	3.25	0.50 / *12.700*	0.257 / *6.500*	0.319 / *8.103*	2	0.250 / *6.350*	0.093 / *2.362*
✚ 5906	5.0	0.90 / *22.860*	0.237 / *6.019*	0.284 / *7.214*	2	0.400 / *10.160*	0.103 / *2.616*
✚ 5908	11.0	1.75 / *44.450*	0.333 / *8.458*	0.377 / *9.576*	2	0.800 / *20.320*	0.103 / *2.616*

✚ = Most popular standard values
✔ = Standard values
✤ = Non-standard values subject to minimum handling charge per item

---

Axiohm Series
Centohm Coated
Axial Terminal Wirewound

FEATURES

- Welded construction
- Inorganic and non-hygroscopic, Centohm coating seals and protects the resistance wire.
- Exceeds MIL-R-26 moisture requirements
- Centohm Resistors are designed to meet and exceed performance characteristics of vitreous enamel resistors.
- Centohm is more cost effective than vitreous enamel.
- ±5% resistance tolerance

OPTIONS

Noninductive: This specially designed version is wound using the Ayrton-Perry method.

Resistance Tolerances: Options include 5%, 1%, 0.5%, 0.25%, and 0.1% resistors.

Terminal Sizes: Alternate terminal diameters available.

Tape and Reel: Resistors taped for automatic insertion. Contact Ohmite for size, quantity and ordering information

Ohmite's Axiohm resistors are Centohm coated for maximum reliability. These all-welded units are characterized by their low temperature coefficients and resistance to thermal shock, making them ideal for a wide range of electrical and electronic applications.

RoHS Compliant

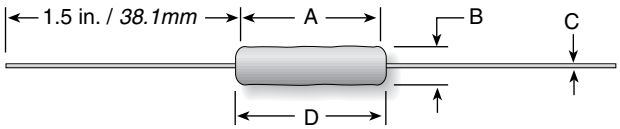

Watt Rating Form	Resistance Range (Ω) Min.	Max.	Standard Resistance Tolerance	Dielectric With-standing Voltage	Maximum Voltage Rating	A ±.063"/*±1.60mm*	B ±.031"/*0.79mm*	C Wire Gauge (dia.)	D max. clean term. to clean term. in./*mm*
1C	0.1	4K	±5%	500	100	0.313±.031 / *7.95±.79*	0.094 / *2.39*	#24 (.020")	0.406 / *10.31*
2C	0.1	10K	±5%	500	300	0.375 / *9.53*	0.219 / *5.56*	#20 (.032")	0.469 / *11.91*
3C	0.1	20K	±5%	500	450	0.5 / *12.7*	0.219 / *5.56*	#20 (.032")	0.594 / *15.09*
4C	0.1	30K	±5%	500	600	0.688 / *17.48*	0.219 / *5.56*	#20 (.032")	0.813 / *20.65*
5C	0.1	40K	±5%	500	800	0.938 / *23.83*	0.219 / *5.56*	#20 (.032")	1.063 / *27.00*
7C	0.1	50K	±5%	500	875	1 / *25.4*	0.313 / *7.95*	#20 (.032")	1.125 / *28.58*
10C	0.1	90K	±5%	500	1600	1.563 / *39.7*	0.313 / *7.95*	#20 (.032")	1.688 / *42.67*

SPECIFICATIONS

Material

Coating: Flameproof proprietary Centohm

Core: Ceramic

Element: Copper-nickel alloy or nickel-chrome alloy depending on resistance value

End Cap: Stainless steel

Terminals: Tinned Copper weld. RoHS solder composition is 96% Sn, 3.5% Ag, 0.5% Cu

Derating

Linearly from
100% @ +25°C to
0% @ +350°C.

Electrical

Tolerance: ±5% (Std) down to 0.1% available.

Power rating: Based on 25°C free air rating (other wattages available).

Overload: Under 5 watts: 5 times rated wattage for 5 seconds. 5 watts and over: 10 times rated wattage for 5 seconds.

Temperature coefficient:
0 ±30ppm /°C above 10Ω
0 ±100ppm/°C 1 to 10Ω
0 ±200ppm/°C below 1Ω

PERFORMANCE DATA

Test	Maximum
Temperature Coefficient	±30ppm/°C above 10Ω ±100ppm/°C 1 to 10Ω ±200ppm/°C below 1Ω
Thermal Shock	± (2% + .05Ω)ΔR
Short Time Overload	± (2% + .05Ω)ΔR
Dielectric	± (0.1% + .05Ω)ΔR
Low Temperature Storage	± (2% + .05Ω)ΔR
High Temperature Exposure	± (2% + .05Ω)ΔR
Moisture Resistance	± (2% + .05Ω)ΔR
Shock	± (2% + .05Ω)ΔR
Vibration	± (2% + .05Ω)ΔR
Load Life	± (3% + .05Ω)ΔR
Terminal Strength	± (1% + .05Ω)ΔR

ΔR values are maximums based on MIL-R-26 testing requirements at 350°C.

ORDERING INFORMATION

Non-Inductive Option (Add N)

E = RoHS compliant

5 N C J 1 0 K E

Example: Std 3 watt, 10K ± 5% = 3CJ10K

- **Wattage**
- **Coating** "C" for Centohm
- **Tolerance** J = 5% (standard), H = 3%, F = 1%, D = .5%, Q = .25%, B = .1%
- **Resistance (Ω)** use "K" for 1000 multiplier; use "R" for decimal point

G Series

Capacitor Discharge & Symmetry

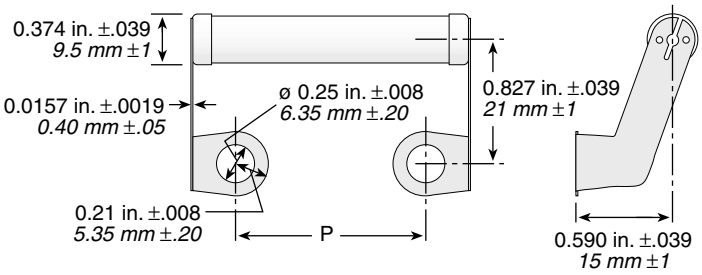

Series	Wattage @25°C	Wattage @70°C	Limiting Voltage	Critical Value	Ohmic Range	Length P (in. ±.039 / *mm±1*)
GW10	10	8.5	685	47KΩ	1Ω-82K	0.866 / *22.0*
GW13	13	11	940	68KΩ	1Ω-120k	1.252 / *31.8*

ORDERING INFORMATION

G Series — **G W 1 0 J 5 K 0 0 E** — E = RoHS compliant

Component Modifier	Wattage	Tolerance	Resistance Value	
W = wirewound	10 watts	K = 10%	R = Decimal	Examples:
	13 watts	J = 5%	K = 1,000	1K00 = 1,000Ω
		G = 2%		10K0 = 10,000Ω
		F = 1%		82K0 = 82,000Ω
				120K = 120,000Ω

Check product availability at **www.ohmite.com**

STANDARD PART NUMBERS

Ohms	10 watt	13 watt
1K	GW10J1K00E	GW13J1K00E
2.5K	GW10J2K50E	GW13J2K50E
5K	GW10J5K00E	GW13J5K00E
7.5K	GW10J7K50E	GW13J7K50E
10K	GW10J10K0E	GW13J10K0E
15K	GW10J15K0E	GW13J15K0E
20K	GW10J20K0E	GW13J20K0E
25K	GW10J25K0E	GW13J25K0E
40K	GW10J40K0E	GW13J40K0E
50K	GW10J50K0E	GW13J50K0E
75K	GW10J75K0E	GW13J75K0E

Check product availability using the Worldwide Inventory Search at ohmite.com

FEATURES

- High Power Dissipation up to 13W @25°C
- Specially Designed to meet Repetitive Pulse Loading
- Corrosion Resistant Terminals for long life
- Superior Vibration Resistance
- IEC 115-1 Reference Standard

SPECIFICATIONS

Temperature Range: -55°C to 200°C
Terminal Strength: >25N
Derating: 25°C to 350°C, Linearly
TCR: ±100 ppm/°C
Tolerance: 1%, ±2%, ±5%, ±10%

PERFORMANCE DATA

Endurance at Rated Temperature	Full Rated Power for 1000hrs, (1.5hrs ON,0.5hrs OFF) at 25°C	ΔR < 5% + 0R05
Short Term Overload	10 x Rated Power for 5 secs, IEC115-1, Clause 4.1.3	ΔR < 2% + 0R05
Damp Heat Steady State	90-95% RH, 40°C, 56 Days, IEC 115-1, Clause 4.17.3	ΔR < 5% + 0R05
Climatic Sequence	As per IEC 115-1,Clause 4.23	ΔR < 5% + 0R05
Solderability	Not Applicable-Resistor is Designed for Screw Mounting Only	
Terminal Strength	25 N Pull Test for 10 Seconds, IEC 115-1, Clause 4.16	ΔR < 0.5% + 0R05

COMPATIBLE CAPACITORS

BHC

GW10 Series	Case Sizes	GW13 Series	Case Sizes
ALS30/31	KE, KF	ALS30/31	ND, NF, NP, NT, RD, RH, RP

Cornell Dubilier

GW10 Series	Case Sizes	GW13 Series	Case Sizes
3186	EA, EB, EC, ED, EE, EF, EG, EH	3186	GC, GD, GE, GF, GG, GH, GJ, DN
3188	EA, EB, EC, ED, EE, EF, EG, EH	3188	GC, GD, GE, GF, GG, GH, GJ, DN
520C	BA, BH, BB, BJ, BC, BD, BE, BF	520C	DB, DJ, DC, DD, DE, DF, DP, DN, DG, FC, FD, FE, FF, FP, FN, FG
DCMC	BA, BH, BB, BJ, BC, BD, BE, BF	DCMC	DB, DJ, DC, DD, DE, DF, DP, DN, DG, FC, FD, FE, FF, FP, FN, FG
OTB	All		
MPF	All		
PF	BA, BH, BB, BJ, BC, BD, BE, BF		
SCR	A		
SF	All		
T	A		

Epcos

GW10 Series	Case Sizes	GW13 Series	Case Sizes
B41456	51.6	B41456	76.9
B41458	51.6	B41458	76.9
B43456	51.6	B43456	76.9, 91
B43458	51.6	B43458	76.9, 91

ILL Capacitor

GW10 Series	Case Sizes	GW13 Series	Case Sizes
LKP	51	LKP	77, 90
LRP	51		

Nichicon UK

GW10 Series	Case Sizes	GW13 Series	Case Sizes
NR	51	NR	76.2, 90
NT	51	NT	76.2, 90
NW	51	NW	76.2, 90
NX	51	NX	76.2, 90
QR	51	QR	76.2, 90

Panasonic

GW10 Series	Case Sizes	GW13 Series	Case Sizes
G	FB, FC, FE, FG, FH, FK, FL, FN, FP	G	HG, HH, HK, HL, HN, HP, HW

United Chemi-Con

GW10 Series	Case Sizes	GW13 Series	Case Sizes
KMH	50	LXA	76, 89
LXA	50	LXR	76, 89
RWE	50	KMH	76, 89
RWF	50	RWE	76, 89
RWY	50	RWF	76, 89
SME	50	RWL	76, 89
		RWY	76, 89
		SME	76, 89
		UTOR	76

Vishay

GW10 Series	Case Sizes	GW13 Series	Case Sizes
36D, 36DE, 36DX	BY, BA, BM, BB, BL, BC, BD, BE, BF	36D, 36DE, 36DX	DB, DJ, DC, DD, DE, DF

HS/HSN Series

Aluminum Housed Axial Terminal Wirewound, Industrial/Commercial Grade

The HS/HSN Series offers greater power capacity (100 and 250 watts) in the same design format as Ohmite's 89 Series.

HS/HSN Series maintains the same construction, materials, and manufacturing techniques as the 89 Series. As a made-to-order product, it is recommended for higher volume applications.

FEATURES

- Standard winding (Model HS)
- Non-inductive winding (Model HSN)
- Molded construction for total environmental protection
- Complete welded construction
- Mounts on chassis to utilize heat-sink effect
- High stability at conventional power ratings
- Flat marking surface for easy identification
- RoHS compliant; add "E" suffix to part number to specify.

SPECIFICATIONS

Material

Housing: Aluminum with hard anodic coating.

Internal Coating: Silicone.

Core: Ceramic.

Terminals: Solder-coated axial

Derating: Linearly from 100% @ +25°C to 0% @ +275°C.

Electrical

Tolerance: ±1% and ±5% (other tolerances available).

Power rating: Rating is based on chassis mounting area and temperature stability. Proper heat sink: 12" x 12" x 0.125 Aluminum panel.

Maximum ohmic values: See chart.

Overload: 5 times rated wattage for 5 seconds.

Temperature coefficient:
Under 1Ω: ±90 ppm/°C
1 to 9.99Ω: ±50 ppm/°C
10Ω and over: ±30 ppm/°C.

Dielectric withstanding voltage: 4500VAC.

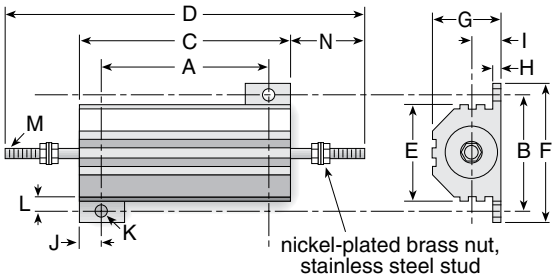

Series	Power Rating (Watts)	Resistance Range (Ohms)	Max. Working Voltage
HS100	100	.05 - 29.4K	1900
HSN100	100	1.0 - 14.7K	1350
HS250	250	.10 - 35.7K	2300
HSN250	250	1.0 - 17.4K	1625

DIMENSIONS

in. *(mm)*	HS100 / HSN100 100 watt	HS250 / HSN250 250 watt
Dim. A	2.75 ± .010 *(69.85 ± .254)*	3.875 ± .010 *(98.425 ± .254)*
Dim. B	2.25 ± .010 *(57.15 ± .254)*	2.5 ± .010 *(63.50 ± .254)*
Dim. C	3.50 ± .031 *(88.90 ± .787)*	4.5 ± .031 *(114.30 ± .787)*
Dim. D	5.478 ± .093 *(139.14 ± 2.36)*	6.73 ± .093 *(170.94 ± 2.36)*
Dim. E	1.812 ± .031 *(46.02 ± .787)*	2.125 ± .031 *(53.98 ± .787)*
Dim. F	2.812 ± .031 *(71.42 ± .787)*	3.0 ± .031 *(76.20 ± .787)*
Dim. G	1.75 ± .031 *(44.45 ± .787)*	2.188 ± .031 *(55.58 ± .787)*
Dim. H	1.88 ± .031 *(4.78 ± .787)*	0.250 ± .031 *(6.35 ± .787)*
Dim. I	0.770 ± .015 *(19.56 ± .381)*	0.955 ± .015 *(24.26 ± .381)*
Dim. J	0.375 ± .031 *(9.52 ± .787)*	0.312 ± .031 *(7.92 ± .787)*
Dim. K	0.188 ± .010 *(4.78 ± .254)*	0.188 ± .010 *(4.78 ± .254)*
Dim. L	0.219 ± .031 *(5.56 ± .787)*	0.25 ± .031 *(6.35 ± .787)*
Dim. M	12 - 24 UNC - 2A THD	1/4 - 20 UNC - 2A THD
Dim. N	0.989 ± .031 *(25.12 ± .787)*	1.25 ± .031 *(31.75 ± .787)*

DERATING CURVE

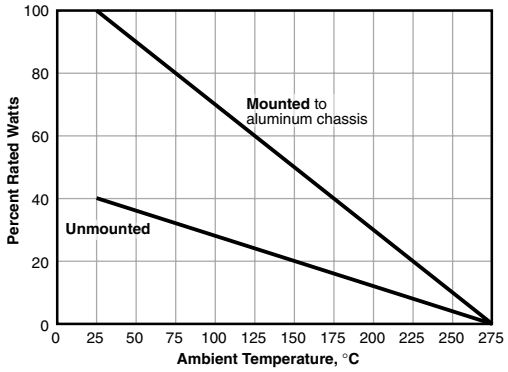

ORDERING INFORMATION

Non-Inductive Winding
Optional (blank = std. winding)

HSN100JR05E

Series	Wattage	Tolerance	Ohms	RoHS Compliant
	100	F = 1%	R05 = 0.05Ω	
	250	J = 5%	1R0 = 1.0Ω	
		K=10%	10R = 10Ω	
			100 = 100Ω	
			10K = 10,000Ω	
			14K7 = 14,700Ω	

Check product availability at **www.ohmite.com**

To see the latest in resistor technology click on the "What's New" tab at ohmite.com

Metalohm Series

Cold Rolled Steel Encased Wirewound Heatsinkable Radial Terminal

FEATURES

- Flameproof and inorganic
- Higher power rating due to heat sink capacity
- All welded construction
- Nonhygroscopic
- High surge construction

SPECIFICATIONS

Electrical

Wattage: Based on a 275°C "U" characteristic derating curve

Temperature coefficient:
≥18 ohm: 0 ±90ppm/°C
8 < 18 ohm: 0 ±50ppm/°C
<8 ohm: 0 ±180ppm/°C
(TC for some watt/ohm combinations may be lower)

Dielectric strength: Terminal to case, depends on terminal style (1500V min.)

Creepage:
term. style 277: 1.2"
term. style 278: 0.4"
term. style 276: 0.7"
term. styles 211/252/279: 0.15"

Termination Wires

- Stranded, available in any insulation rated 125°C or higher (may require term. style 297).
- Custom cut/stripped lengths
- Can be potted or pre-soldered to terminal styles 211 or 252
- Quick connect (fully or partially insulated), ring or spade terminations available

Dielectric Sleeves

- Steatite construction
- Style 276 meets UL/NEMA 2500V RMS for one minute requirement
- Available as terminal styles 276, 277, 278, 297

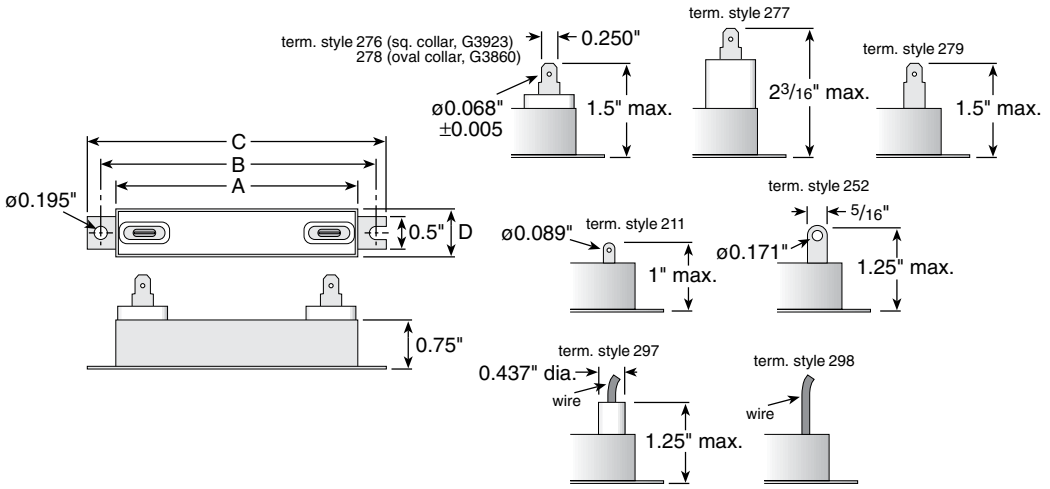

Style	Watts w/o heat sink	Watts w/ heat sink*	Dimensions (inches) A	B	C	D	Ohmic range**
20/45M	20	45	1	1 7/16	1 7/8	3/4	0.05-6K
40/70M	40	70	2 9/16	3	3 7/16	3/4	1.0-25K
HV40-70M	40	70	2 9/16	3	3 7/16	7/8	1.0-25K
50/100M	50	100	3 11/16	4 1/8	4 9/16	3/4	1.5-47.5K
60/115M	60	115	5 9/16	6	6 7/16	3/4	2.5-81K
85/150M	85	150	7 1/2	8	8 1/2	3/4	4.5-100K

*Based on a 12"x12"x1/8" aluminum heat sink, using a thermal compound, in a 25°C ambient

**Standard winding ranges only listed, other values available; contact Ohmite.

DIELECTRIC STRENGTH

Terminal Type	211	252, 279	276	278	277	297	298
Style				Dielectric Strength			
20/45M	1500	N/A	N/A	N/A	N/A	2500V	2500V
40/70M	1500	1500	2500	2500	N/A	2500V	2500V
HV40/70M	N/A	N/A	N/A	N/A	4250	N/A	N/A
50/100M	1500	1500	2500	2500	N/A	2500V	2500V
60/115M	1500	1500	2500	2500	N/A	2500V	2500V
85/150M	1500	1500	2500	2500	N/A	2500V	2500V

OPTIONS

- Noninductive versions (Aryton-Perry windings)
- Terminal sleeves to increase dielectric strength and maximize creepage distance
- Variety of terminal choices
- Potted or soldered wire terminals including quick connect, ring, spade terminals
- Tapped models

ORDERING INFORMATION

RoHS Compliant

40/70M N J 10K50 A E

- **Style**
- **Non-inductive (optional)**
- **Tolerance**: K = 10%, J = 5%
- **Ohms**: 00R05 = 0.05, 00R50 = 0.50, 1R000 = 1.00, 1K000 = 1,000, 10K50 = 10,500
- **Terminal Type**: A = 211, B = 252, C = 279, D = 276, E = 277, F = 278, G = 297, H = 298

Check product availability at **www.ohmite.com**

Subscribe to our New Product Bulletin at ohmite.com

PC-58 Series

Tubular Radial Terminal Wirewound for PC Board Applications

SPECIFICATIONS

Material

Core: Ceramic.

Coating: Vitreous enamel except for values above 4.7K (3W) and 7.5K (5W), which are supplied in silicone-ceramic coatings.

Terminals: Solder coated radial. #20 ga. tinned terminals require 0.046 in. (1.168 mm) holes (2). RoHS solder composition is 96% Sn, 3.5% Ag, 0.5% Cu

Derating: Linearly from 100% @ +25°C to 0% @ +350°C.

Note: Values above 3.9K (3W) and 8.2K (5W) involve very fine resistance wire and should not be used in critical applications without burn-in and/or thermal cycling.

Electrical

Tolerance: ±5% (J) (other tolerances available).

Power rating: Based on 25°C free air rating.

Overload:
3 watt: 5 times rated wattage for 5 seconds.
5.25 watt: 10 times rated wattage for 5 seconds.

Temperature coefficient: ±260 ppm/°C.

To calculate max. amps: use the formula $\sqrt{P/R}$.

ORDERING INFORMATION

RoHS Compliant

R 5 J 1 K 0 E

- **PC-58 Series**
- **Wattage**
- **Tolerance** J = 5%
- **Ohm Value** Example: 1R0 = 1.0Ω, 10R = 10.0Ω, 250 = 250Ω, 4K7 = 4,700Ω

FEATURES

- Radial construction for direct insertion into printed circuit boards; fit standard 0.10 inch matrix boards with standard 0.046 inch diameter holes. Provides a built in stand-off to reduce board temperature.
- Space saving radial terminals reduce the total length requirement compared to axial terminal resistors and increase packaging density possibilities.
- Flame resistant lead free vitreous enamel coating.
- RoHS compliant; add "E" suffix to part number to specify.

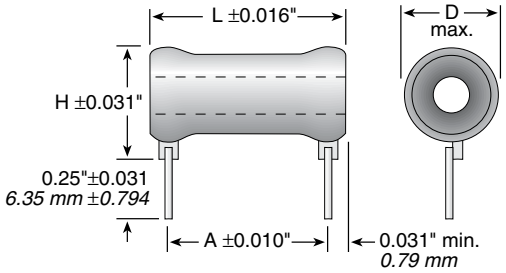

Series	Wattage	Ohms	Dimensions (in. / *mm*) Length	Height	Diam.	Dim. A	Voltage
R3 (vitreous) (silicone)	3	1-3.9K 4K-10K	0.438 / *11.13*	0.469 / *11.91*	0.313 / *7.95*	0.30 / *7.62*	103
R5 (vitreous) (silicone)	5.25	1-7.4K 7.5K-20K	0.625 / *15.88*	0.516 / *13.11*	0.344 / *8.74*	0.50 / *12.70*	187

STANDARD PART NUMBERS FOR PC-58 SERIES

Ohmic value	Part No. Prefix ➤ Suffix ▼	Wattage 3 R3J	Wattage 5 R5J	Ohmic value	Part No. Prefix ➤ Suffix ▼	Wattage 3 R3J	Wattage 5 R5J	Ohmic value	Part No. Prefix ➤ Suffix ▼	Wattage 3 R3J	Wattage 5 R5J	Ohmic value	Part No. Prefix ➤ Suffix ▼	Wattage 3 R3J	Wattage 5 R5J
1	1R0	✔	✔	51	51R		✔	430	430	✔		2500	2K5		✔
1.5	1R5	✔	✔	56	56R	✔	✔	500	500	✔	✔	2700	2K7	✔	
2	2R0	✔	✔	68	68R	✔	✔	510	510		✔	3000	3K0	✔	✔
2.4	2R4	✔		75	75R		✔	560	560	✔	✔	3300	3K3		✔
3	3R0	✔	✔	82	82R	✔	✔	600	600	✔	✔	3900	3K9	✔	✔
3.9	3R9	✔	✔	100	100	✔	✔	620	620	✔		4700	4K7	✔	✔
5	5R0		✔	120	120	✔	✔	750	750	✔	✔	5000	5K0	✔	✔
5.1	5R1	✔		150	150	✔	✔	800	800		✔	5600	5K6	✔	✔
5.6	5R6		✔	160	160		✔	820	820	✔		6200	6K2	✔	✔
7.5	7R5	✔		200	200	✔	✔	910	910	✔		6800	6K8		
10	10R	✔	✔	220	220		✔	1000	1K0	✔	✔	7500	7K5	✔	✔
15	15R	✔	✔	250	250	✔	✔	1200	1K2	✔	✔	8200	8K2		✔
18	18R		✔	270	270	✔	✔	1300	1K3		✔	9000	9K0	✔	✔
20	20R	✔	✔	300	300	✔	✔	1500	1K5	✔		9100	9K1		✔
22	22R		✔	330	330	✔	✔	1800	1K8	✔	✔	10,000	10K	✔	✔
25	25R		✔	350	350		✔	2000	2K0	✔	✔	12,000	12K		✔
30	30R	✔	✔	390	390	✔		2200	2K2		✔	15,000	15K		✔
40	40R		✔	400	400		✔	2400	2K4	✔		20,000	20K		✔
50	50R	✔	✔												

✔ = Standard values

Values above 3.9K (3W) and 8.2K (5W) involve very fine resistance wire and should not be used in critical applications without burn-in and/or thermal cycling.

Values above 4.7K (3W) and 7.5K (5W) supplied in silicone-ceramic coatings instead of vitreous enamel.

Check product availability at **www.ohmite.com**

Our friendly Customer Service team can be reached at 866-9-OHMITE

WFH Series

Aluminum Housed Wirewound Power

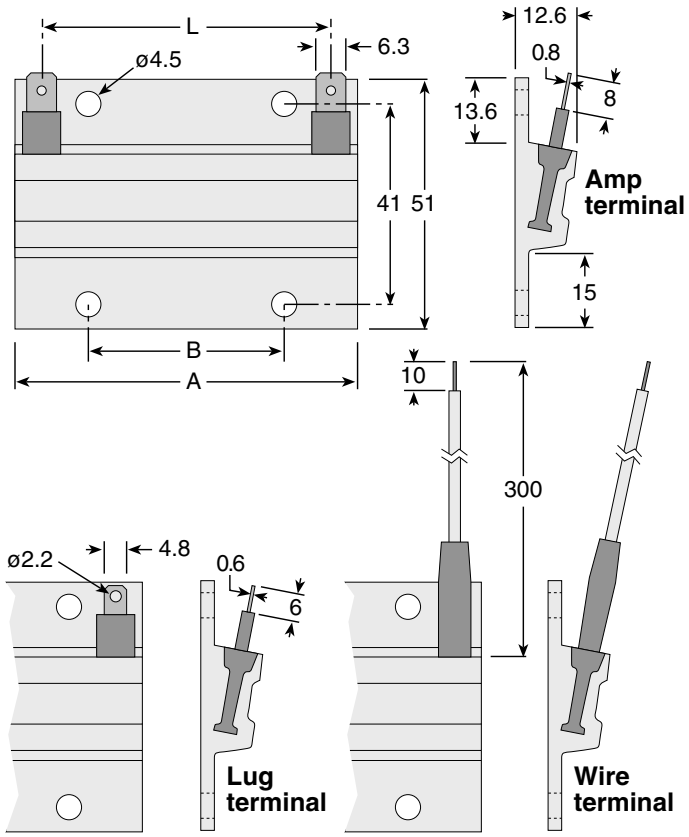

Type	Power Rating* (watts)	Resistance Range (Ω)	Dimension (mm) A	B	L
WFH90	90	0.22Ω – 6.8K	70	39.7	53
WFH160	160	0.47Ω-18K	140	80	123
WFH230	230	0.82Ω-27K	210	2x 80	193
WFH330	330	1Ω - 39K	280	2x 100	263

*at 40°C base plate temperature

DESIGNING

The following equations are applied in the dimensioning of the resistors at stationary load. If more information is required please consult Ohmite. It is assumed that the air around the resistors is stationary (worst case). **See ohmite.com for more examples.**

1. WFH is mounted on a heat sink:

A. The thermal resistance R_{TH} of the heat sink is known,

$T = W_{MAX} \times (R_{TH4} + R_{TH})$

Check that:

$T_{MAX} = W_{MAX} \times (R_{TH} + R_{TH3} + R_{TH1}) + T_{AMB} < 220°C$

B. The Temperature of the Heat Sink is known,

$T = W_{MAX} \times R_{TH4} + T_H$

Check that:

$T_{MAX} = W_{MAX} \times (R_{TH1} + R_{TH3}) + T_H < 220°C$

2. WFH is mounted without a heat sink:

Check that:

$T_{MAX} = W_{MAX} \times (R_{TH1} + R_{TH2}) + T_{AMB} < 220°C$

Where:

W_{MAX} = Maximum reguired load in resistor

T_{MAX} = Maximum hot spot temperature reguested in resistor (T_{MAX} <220°C) The lower T_{MAX} the higher reliability and lifetime.

T_{AMB} = Ambient temperature

R_{TH} = Thermal resistance. Refer to table Thermal resistances

T_H = Heat sink temperature (chassis).

T = Temperature on top of the Aluminum profile.

Ohmite's new flat core winding technology allows for wire-wound heatsinkable resistors affording a very low profile, and superior thermal transfer characteristics when compared to conventional aluminum housed wirewound resistors. Close mounting of heat sensitive components is possible due to only a slight rise of the temperature on the aluminum profile.
No heat sink compound is required because of large mounting surface.

FEATURES

- Solder, wire and "Fast-On" Termination
- More resistors in one profile possible
- Custom wire lengths available

SPECIFICATIONS

Power rating: 90W-330W
Resistance tolerance: ±5%, ±10%
Temperature Coefficients:
Normal: 50ppm - 150ppm
Low ohmic values: 400ppm
Dielectric strength: 2500 VAC peak
Working voltage: 1200 VAC
Test voltage: 6000 VAC
Lead wire: (wire terminal version only): XLPE, 600V, 125C, 18 AWG stranded
Insulation: Silicone Rubber & Mica. The Silicone is UL-recognised (UL 94 HB) to a working temperature of 220°C. Temperatures of up to 300°C can be endured for shorter periods. This may however cause an expansion of the silicone rubber with a possibility of reducing the dielectric strength.

POWER DISSIPATION

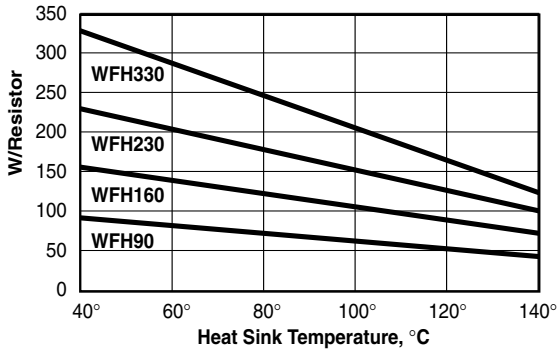

This graph shows the maximum wattage rating for each possible resistor of standard size corresponding to the heat sink temperature. It is assumed that all resistors are equally loaded.

THERMAL RESISTANCES

Thermal Resistance (°C/W) between different measuring points

	WFH90	WFH160	WFH230	WFH330
R_{TH1}	2	1	0.75	0.5
R_{TH2}	6.8	3.9	2.75	2
R_{TH3}	0.1	0.05	0.03	0.02
R_{TH4}	0.3	0.17	0.1	0.085

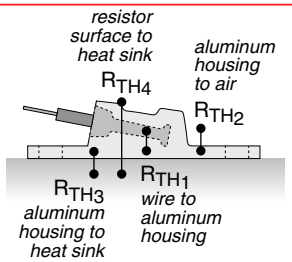

ORDERING INFORMATION

WFH160LR47KE- RoHS Compliant

- **Series**: WFH
- **Wattage** at 40°C base plate temp.: 160
- **Terminal Type**: L = lug terminals; A = amp terminals; W= 30cm insulated wire cable 18AWG
- **Ohms**: R47= 0.47Ω
- **Tolerance**: J = 5%; K = 10%

Check product availability at **www.ohmite.com**

STANDARD PART NUMBERS FOR WFH SERIES

WFH90L4R7KE	WFH160LR47KE	WFH160L1K0JE	WFH230L100JE	WFH330L50RJE
WFH90L10RKE	WFH160L1R0KE	WFH160L5K0JE	WFH230L150JE	WFH330L75RJE
WFH90L25RJE	WFH160L2R0KE	WFH160L10KJE	WFH230L250JE	WFH330L100JE
WFH90L50RJE	WFH160L10RKE	WFH230L1R0KE	WFH230L1K0JE	WFH330L150JE
WFH90L100JE	WFH160L27RJE	WFH230L2R0KE	WFH230L1K5JE	WFH330L250JE
WFH90L470JE	WFH160L50RJE	WFH230L5R0KE	WFH230L2K5JE	WFH330L1K0JE
WFH90L750JE	WFH160L75RJE	WFH230L10RKE	WFH330L1R0KE	WFH330L5K0JE
WFH90L1K0JE	WFH160L100JE	WFH230L27RJE	WFH330L2R0KE	WFH330L10KJE
WFH90L2K7JE	WFH160L150JE	WFH230L50RJE	WFH330L10RKE	
WFH90L5K0JE	WFH160L250JE	WFH230L75RJE	WFH330L27RJE	

SH Series

Precision Metal-Clad Shunts

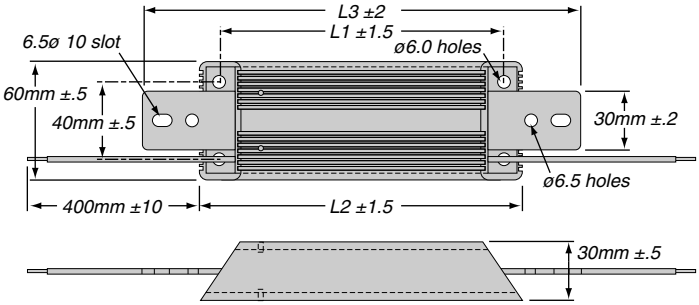

Series	Rated Current (A)	Rated Voltage (mV)	Resistance (mΩ)	Mass (g)	Dimensions (mm) L_1 ±1.5	L_2 ±2	L_3 ±2
SH2	100	100	1.0000	650	146	165	225
	150	100	0.6666	650	146	165	225
	200	100	0.5000	650	146	165	225
SH3	250	100	0.4000	1100	196	215	275
	300	100	0.3333	1100	196	215	275

ORDERING INFORMATION

RoHS Compliant

S H 2 - 2 0 0 R 0 0 0 5 D E

- Series: SH
- Size: 2
- Current: 200
- Resistance: R0005 (*see table*)
- Tolerance: D
- RoHS Compliant: E

Tolerance: B = ±0.1%, D = ±0.5%

Precision metal clad resistors designed in four-terminal technique, are distinguished by high load capacity as well as excellent accuracy. Isolated voltage and current connections making them suitable for very precise current measurements. The simple four port Kelvin design ensures easy installationon large current bus bars. Units have a low inductance, heavy copper terminals. Applications include: battery testing, current detection in precise power sources, constant current sources, industrial power conversion circuits, HEVs, fuel cells and constant electronic loads.

SPECIFICATIONS

Temp. Range: -55°C ~ +110°C

Insulation Resist.: 100MΩ min.

Dielectric Withstanding Voltage: AC 500V for 1 minute

Temp. Coefficient: Max. 30ppm/°C [20°C and 60°C]

PERFORMANCE DATA

Test	Method	Maximum ΔR
Short Time Overload	5x Power rating 5 sec.	±0.3%
Moisture Resistance	40°C, 95% RH, DC100V case to terminal, 500 hours	±0.5%
Thermal Shock	-65°C 30 minutes, +90°C 30 minutes 25 cycles	±0.2%
Vibration	10Hz-55Hz-10Hz (1min.), 2 hours each direction	±0.2%
Moisture Load Life	40°C, 95% RH, 0.1XPower rating 1.5 hours on, 30 minutes off, 500 hours	±0.5%
Load Life	Power rating 1.5 hours on, 30 min. off, 500 hours	±0.5%

STANDARD PART NUMBERS FOR SH SERIES

Part	Rated Current (A)	Rated Voltage (mV)	Resistance (mΩ)	Resistance Tolerance
SH2-100R0010DE	100	100	1.0000	0.5%
SH2-150R0006DE	150	100	0.6666	0.5%
SH2-200R0005DE	200	100	0.5000	0.5%
SH3-250R0004DE	250	100	0.4000	0.5%
SH3-300R0003DE	300	100	0.3333	0.5%

200 Series

Brown Devil® Vitreous Enamel Power

Ohmite's Brown Devil® is a small, exceptionally durable power resistor. It features all-welded construction and rugged, flame resistant conformal lead free vitreous enamel coating to ensure successful performance under high temperatures.

The wirewound 200 Series has a hollow-core construction, which accommodates rigid mounting with brackets or thru bolts.

Mounting brackets not included with resistors.

FEATURES

- Rugged lead free vitreous enamel coating
- All-welded construction.
- Self supporting terminal mounting option.
- Higher power ratings.
- Flame-resistant lead free vitreous enamel coating.
- RoHS compliant product available. Add "E" suffix to part number to specify.

See page 36 for mounting hardware

SPECIFICATIONS

Material

Coating: lead free vitreous enamel.

Core: Ceramic.

Terminals: Tinned axial; RoHS solder composition is 96% Sn, 3.5% Ag, 0.5% Cu

Derating: Linearly from 100% @ +25°C to 0% @ +350°C.

Electrical

Tolerance: 1Ω+: ±5% under 1Ω: ±10%

Power rating: Based on 25°C free air rating.

Overload: 10 times rated wattage for 5 seconds.

Temperature coefficient: 5Ω and under: ±400 ppm/°C Above 5Ω: ±260 ppm/°C

To calculate max. amps: use the formula $\sqrt{P/R}$.

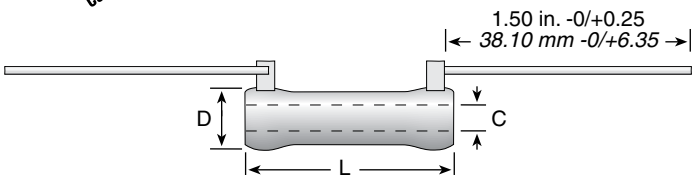

Series	Wattage	Ohms	Dimensions (in. / *mm*) L	D	C	Lead Gauge	Max. Volt.*
B5	5.25	0.1-20K	0.625 / *15.88*	0.250 / *6.35*	0.135 / *3.43*	20	187
B8	8.0	0.03-25K	1.000 / *25.40*	0.313 / *7.94*	0.188 / *4.76*	18	250
B12	12.0	0.08-51K	1.750 / *44.45*	0.313 / *7.94*	0.188 / *4.76*	18	625
B20	20.0	0.1-100K	2.000 / *50.80*	0.438 / *11.11*	0.250 / *6.35*	18	750

Non-Inductive versions available. Insert "N" before tolerance code. **Example** - B5NJ10RE
Also available in low cost Centohm or Silicone coating. Consult Ohmite.
* Maximum Voltage is based on Ohm's Law [$V=\sqrt{P*R}$] as limited by the resistance value of specified product

ORDERING INFO

Coating: Blank = Vitreous; C = Centohm; S = Silicone

Wattage

Non-Inductive Winding: Optional (blank = std. winding)

RoHS Compliant

B 8 N J 5 R 0 E

Series

Tolerance: F = 1%; H = 3%; J = 5%; K = 10%

Ohms: 1R0 = 1 Ω; 250 = 250 Ω; 1K0 = 1,000 Ω; 25K = 25,000 Ω; 25K5 = 25,500 Ω

MADE-TO-ORDER PARTS

See website for custom core info

Non-Inductive Winding: Optional (blank = std. winding)

Core Diameter: See "Core and Terminal Selection"

RoHS Compliant

2 0 0 N 8 D 5 R 0 0 0 J E

Coating: 200 = Vitreous; 400 = Silicone Ceramic

Wattage: 3, 5.25, 8, 12, 20

Ohms: R500 = 0.500 Ω; 1R00 = 1 Ω; 250R = 250 Ω; 1K00 = 1,000 Ω; 25K0 = 25,000 Ω; 25K5 = 25,500 Ω

Tolerance: F = 1%; H = 3%; J = 5%; K = 10%

STANDARD PART NUMBERS FOR 200 SERIES

Ohmic value	Part No. (Prefix ➤ / Suffix ▼)	B5J (5.25)	B8J (8)	B12J (12)	B20J (20)
0.5	R50E			✔	✔
1	1R0E	✔	✔	✔	✔
1.1	1R1E				
1.2	1R2E				
1.3	1R3E				
1.5	1R5E	✔	✔	✔	
1.6	1R6E	✔			
1.8	1R8E	✔			
2	2R0E	✔	✔	✔	✔
2.2	2R2E				
2.4	2R4E	✔			
2.7	2R7E	✔			
3	3R0E	✔	✔	✔	✔
3.3	3R3E	✔			
3.6	3R6E	✔			
3.9	3R9E	✔			
4	4R0E		✔	✔	✔
4.3	4R3E	✔			
4.7	4R7E	✔			
5	5R0E		✔	✔	✔
5.1	5R1E	✔			
5.6	5R6E	✔			
6.2	6R2E	✔			
6.8	6R8E	✔			
7.5	7R5E	✔	✔	✔	
8.2	8R2E	✔			
9.1	9R1E	✔			
10	10RE	✔	✔	✔	✔
11	11RE				
12	12RE	✔	✔	✔	
13	13RE				
15	15RE	✔	✔	✔	
16	16RE				
18	18RE				

Ohmic value	Part No. (Prefix ➤ / Suffix ▼)	B5J (5.25)	B8J (8)	B12J (12)	B20J (20)
20	20RE	✔	✔	✔	
22	22RE	✔			
24	24RE	✔			
25	25RE		✔	✔	✔
27	27RE	✔			
30	30RE	✔	✔	✔	
33	33RE	✔			
35	35RE		✔	✔	
36	36RE				
39	39RE	✔			
40	40RE		✔	✔	✔
43	43RE	✔			
47	47RE	✔			
50	50RE		✔	✔	✔
51	51RE	✔			
56	56RE	✔			
62	62RE	✔			
68	68RE	✔			
75	75RE	✔	✔	✔	✔
82	82RE	✔			
91	91RE	✔			
100	100E	✔	✔	✔	✔
110	110E				
120	120E	✔			
125	125E		✔	✔	✔
130	130E			✔	
150	150E	✔	✔		✔
160	160E	✔			
180	180E	✔			
200	200E	✔	✔	✔	✔
220	220E	✔			
225	225E			✔	
240	240E	✔			
250	250E		✔	✔	✔

Ohmic value	Part No. (Prefix ➤ / Suffix ▼)	B5J (5.25)	B8J (8)	B12J (12)	B20J (20)
270	270E	✔			
300	300E		✔	✔	✔
330	330E	✔			
350	350E		✔	✔	✔
360	360E				
390	390E	✔			
400	400E		✔	✔	✔
430	430E				
450	450E		✔	✔	
470	470E	✔			
500	500E		✔	✔	✔
510	510E	✔			
560	560E	✔			
600	600E		✔	✔	
620	620E	✔			
650	650E				✔
680	680E	✔			
700	700E		✔	✔	
750	750E	✔	✔	✔	✔
800	800E		✔	✔	✔
820	820E	✔			
900	900E		✔	✔	
910	910E				
1,000	1K0E	✔	✔	✔	✔
1,100	1K1E	✔	✔		
1,200	1K2E	✔		✔	✔
1,250	1K25E		✔	✔	✔
1,300	1K3E	✔			
1,500	1K5E	✔	✔	✔	✔
1,600	1K6E				
1,750	1K75E		✔	✔	✔
1,800	1K8E				
2,000	2K0E	✔	✔	✔	✔
2,200	2K2E	✔			

Ohmic value	Part No. (Prefix ➤ / Suffix ▼)	B5J (5.25)	B8J (8)	B12J (12)	B20J (20)
2,250	2K25E		✔	✔	
2,400	2K4E				
2,500	2K5E		✔	✔	✔
2,700	2K7E	✔			
2,750	2K75E				✔
3,000	3K0E	✔	✔	✔	✔
3,300	3K3E	✔			
3,500	3K5E		✔	✔	✔
3,600	3K6E				
3,900	3K9E	✔			
4,000	4K0E		✔	✔	✔
4,300	4K3E				
4,500	4K5E	✔	✔	✔	
4,700	4K7E	✔			
5,000	5K0E		✔	✔	✔
5,100	5K1E	✔			
5,600	5K6E	✔			
6,000	6K0E		✔	✔	✔
6,200	6K2E	✔			
6,800	6K8E	✔			
7,000	7K0E		✔	✔	✔
7,500	7K5E	✔	✔	✔	✔
8,000	8K0E		✔	✔	✔
8,200	8K2E	✔			
8,500	8K5E				
9,000	9K0E		✔		✔
9,100	9K1E				
10,000	10KE	✔	✔	✔	✔
11,000	11KE			✔	
12,000	12KE	✔		✔	
12,500	12K5E		✔	✔	✔
13,000	13KE	✔			
13,500	13K5E			✔	
15,000	15KE	✔	✔	✔	✔

Ohmic value	Part No. (Prefix ➤ / Suffix ▼)	B5J (5.25)	B8J (8)	B12J (12)	B20J (20)
16,000	16KE			✔	
17,500	17K5E		✔	✔	
18,000	18KE			✔	
20,000	20KE	✔	✔	✔	✔
22,500	22K5E			✔	
25,000	25KE		✔	✔	✔
30,000	30KE			✔	✔
35,000	35KE			✔	✔
40,000	40KE			✔	✔
45,000	45KE			✔	
50,000	50KE			✔	✔
55,000	55KE				
60,000	60KE				
65,000	65KE				
70,000	70KE				
75,000	75KE				
80,000	80KE				✔
85,000	85KE				
90,000	90KE				
95,000	95KE				
100,000	100KE				

✔ = Standard values; check availability using the worldwide inventory search at www.ohmite.com

These values involve very fine resistance wire and should not be used in critical applications without burn-in and/or thermal cycling:

B5: 6.8K-20KΩ
B8: 12.5K-25KΩ
B12: 30K-51KΩ
B20: 22.5K-100KΩ

210 Series

Dividohm® Vitreous Enamel Adjustable Power

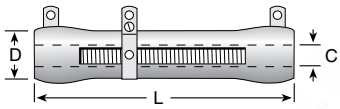

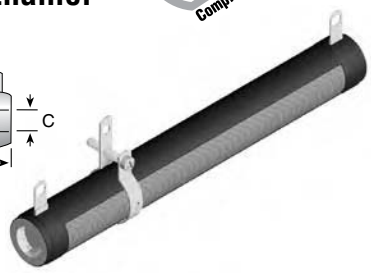

FEATURES

- Terminals suitable for soldering or bolt connection.
- Adjustable lug supplied.
- High wattage applications.
- All-welded construction.
- Rugged lead free vitreous enamel coating.
- Flame resistant coating.
- Thumb-screw-adjustable lug available (Part No. 2160) for 1.125" core resistors.
- RoHS compliant product available. Add "E" suffix to part number to specify.

Series	Wattage	Ohms	Dimensions (in. / *mm*) L	D	C	Core Code	Voltage	Standard Terminal
D12	12	1.0-10K	1.75 / *44.4*	0.313 / *7.94*	0.188 / *4.76*	D	565	57
D25	25	1.0-25K	2.0 / *50.8*	0.562 / *14.3*	0.313 / *7.94*	K	625	40
D50	50	1.0-100K	4.0 / *101.6*	0.562 / *14.3*	0.313 / *7.94*	K	1625	40
D75	75	1.0-100K	6.0 / *152.4*	0.562 / *14.3*	0.313 / *7.94*	K	2625	40
D100	100	1.0-100K	6.5 / *165.1*	0.750 / *19.1*	0.50 / *12.7*	M	2845	40
D175	175	1.0-100K	8.5 / *215.9*	1.125 / *28.6*	0.75 / *19.1*	P	3595	46
D225	225	1.0-100K	10.5 / *266.7*	1.125 / *28.6*	0.75 / *19.1*	P	4595	46
D500	500	1.5-15K	12.0 / *304.8*	2.50 / *63.5*	1.75 / *44.5*	S	4970	45
D1000	1000	3.0-27.7K	20.0 / *508.0*	2.50 / *63.5*	1.75 / *44.5*	S	8900	45

Other sizes available; contact Ohmite. Also available in low cost Centohm or Silicone coating; contact Ohmite.

Choose Ohmite's 210 Type adjustable resistors for applications requiring settings at different resistance values. These wire-wound resistors are equipped with an adjustable lug, making them ideal for adjusting circuits, obtaining odd resistance values and setting equipment to meet various line voltages. 210 Type resistors feature a hollow core to permit secure fastening with spring-type clips or thru bolts with washers. They also offer the durability of lead free vitreous enamel coating and all-welded construction. Mounting brackets not included with resistors.

SPECIFICATIONS

Adjustability is 10% to 90% of full value. Wattage is proportional to this adjusted resistance value.

Material

Coating: Lead free vitreous enamel.

Core: Tubular ceramic.

Terminals: Solder coated radial lug. RoHS solder composition is 96% Sn, 3.5% Ag, 0.5% Cu

Adjustable terminal: Nickel plated steel. (Screwdriver type adjustable lug supplied standard. Other types, including silver contact units, available.)

Derating: Linearly from 100% @ +25°C to 0% @ +350°C.

Electrical

Tolerance: ±10% (K)

Power rating: Based on 25°C free air rating. The stated wattage rating applies only when the entire resistance is in the circuit. Setting the lug at an intermediate point reduces the wattage rating by approximately the same proportion. Example: If the lug is set at half resistance, the wattage is reduced by approximately one-half.

Overload: 10 times rated wattage for 5 seconds.

Temperature coefficient: ±260 ppm/°C

Dielectric withstanding voltage: 1000 VAC: 12 to 100 watt rating. 3000 VAC: 175 and 225 watt rating (measured from terminal to mounting bracket)

To calculate max. amps: use the formula $\sqrt{P/R}$.

See page 36 for mounting hardware

ORDERING INFO

Coating
Blank = Vitreous
C = Centohm
S = Silicone

RoHS Compliant

D 2 5 K 1 0 0 E

Series | **Wattage** | **Tolerance** | **Ohms**

Tolerance: J = 5%, K = 10%

Ohms: 1R0 = 1 Ω; 250 = 250 Ω; 1K0 = 1,000 Ω; 25K = 25,000 Ω; 25K5 = 25,500 Ω

MADE-TO-ORDER

Core Diameter See "Core and Terminal Selection"

Terminal Type See "Resistor Terminals for Tubular Cores"

RoHS Compliant

2 1 0 5 0 K 4 0 5 R 0 0 J E

Coating
210 = Vitreous
410 = Silicone Ceramic
610 = Centohm

Wattage

Ohms
R500 = 0.500 Ω
1R00 = 1 Ω
250R = 250 Ω
1K00 = 1,000 Ω
25K0 = 25,000 Ω
25K5 = 25,500 Ω

Tolerance
J = 5%
K = 10%

See website for custom core and terminal info

Power limitations for high resistance values: When resistance exceeds the resistance values listed below, derate the Power Rating by 25% to improve reliability:

Power rating	Resistance value
12W	4,500Ω
25W	9,000Ω
50W	20,000Ω
75W	35,000Ω
100W	50,000Ω

No power derating necessary for ratings higher than 100W.

STANDARD PART NUMBERS FOR 210 SERIES

Ohmic value	Part No. (Prefix ➤ / Suffix ▼)	12 (D12K)	25 (D25K)	50 (D50K)	75 (D75K)	100 (D100K)	175 (D175K)	225 (D225K)	500 (D500K)	1000 (D1000K)
1.0	1R0E	✔	✔	✔	✔	✔	✔	✔		
2	2R0E	✔	✔	✔	✔	✔	✔	✔		
3	3R0E		✔	✔	✔	✔	✔	✔		
4	4R0E			✔		✔	✔	✔		
5	5R0E	✔	✔	✔	✔	✔	✔	✔	✔	✔
7.5	7R5E	✔	✔							
10	10RE	✔	✔	✔	✔	✔	✔	✔		
15	15RE	✔	✔		✔					
20	20RE	✔	✔							
25	25RE	✔	✔	✔	✔	✔	✔	✔		
50	50RE	✔	✔	✔	✔	✔	✔	✔		
75	75RE	✔	✔	✔						
100	100E	✔	✔	✔	✔	✔	✔	✔		

Ohmic value	Part No. (Prefix ➤ / Suffix ▼)	12 (D12K)	25 (D25K)	50 (D50K)	75 (D75K)	100 (D100K)	175 (D175K)	225 (D225K)	500 (D500K)	1000 (D1000K)
150	150E	✔	✔	✔						
200	200E	✔	✔	✔	✔					
250	250E	✔	✔	✔	✔	✔	✔	✔		
300	300E	✔	✔	✔	✔					
400	400E	✔	✔	✔	✔					
500	500E	✔	✔	✔	✔	✔	✔	✔	✔	✔
750	750E	✔	✔	✔	✔					
800	800E		✔	✔						
1,000	1K0E	✔	✔	✔	✔	✔	✔	✔	✔	✔
1,250	1K25E	✔	✔							
1,500	1K5E	✔	✔	✔	✔	✔	✔	✔		
2,000	2K0E	✔	✔	✔	✔					
2,500	2K5E	✔	✔	✔		✔	✔	✔		

Ohmic value	Part No. (Prefix ➤ / Suffix ▼)	12 (D12K)	25 (D25K)	50 (D50K)	75 (D75K)	100 (D100K)	175 (D175K)	225 (D225K)
3,000	3K0E	✔	✔	✔				
4,000	4K0E	✔						
5,000	5K0E	✔	✔	✔		✔	✔	✔
6,000	6K0E		✔					
7,000	7K0E	✔	✔					
7,500	7K5E	✔	✔	✔				
10,000	10KE	✔	✔	✔	✔	✔	✔	
12,000	12KE							
15,000	15KE		✔	✔				
20,000	20KE		✔	✔	✔			
25,000	25KE		✔	✔				
50,000	50KE			✔		✔		
100,000	100KE			✔		✔	✔	

✔ = Standard values; check availability using the worldwide inventory search at www.ohmite.com

50KΩ and 100KΩ resistance values involve very fine resistance wire and should not be used in critical applications without burn-in and/or thermal cycling.

250 Series

'Thin' Stackohm® Vitreous Enamel Power

When limited space is a consideration, choose Ohmite's "thin" stackable 250 Type resistors. These oval-shaped ceramic-core resistors feature a low profile to permit installation in spaces with height restrictions. They are also equipped with integral mounting brackets so they can be fastened to a chassis and stacked in locations with limited surface area.

When properly fastened, the mounting brackets add a heat sinking benefit resulting in a smaller size per watt. Durable 250 Type resistors are fully welded and coated with lead free vitreous enamel.

FEATURES

- Small size-to-power ratio.
- Stackable
- Integral mounting bracket conducts heat to mounting surface.
- Low profile for use in equipment where space is limited.
- All-welded construction.
- RoHS compliant product available. Add "E" suffix to part number to specify.

SPECIFICATIONS

Material

Coating: Lead free vitreous enamel.

Core: Ceramic.

Terminals: Tinned lug with hole. RoHS solder composition is 96% Sn, 3.5% Ag, 0.5% Cu

Derating: Linearly from 100% @ +25°C to 0% @ +350°C.

Electrical

Tolerance: ±5% (J)

Power rating: Based on mounting a single resistor on a metal surface measuring 10" (254mm) square by 0.04" (1.016mm) thick. Reduce rating by 15% when mounting on non-metallic surface.

Overload: 10x rated wattage for 5 seconds if max. voltage is not exceeded.

Temperature coefficient: 1 to 20Ω: ±400 ppm/°C. Over 20Ω: ±260 ppm/°C

Dielectric withstanding voltage: 500 VAC: 10 and 20 watt rating. 1000 VAC: 30, 40 and 55 watt rating (measured from lug to mounting bracket)

To calculate max. amps: use the formula $\sqrt{P/R}$

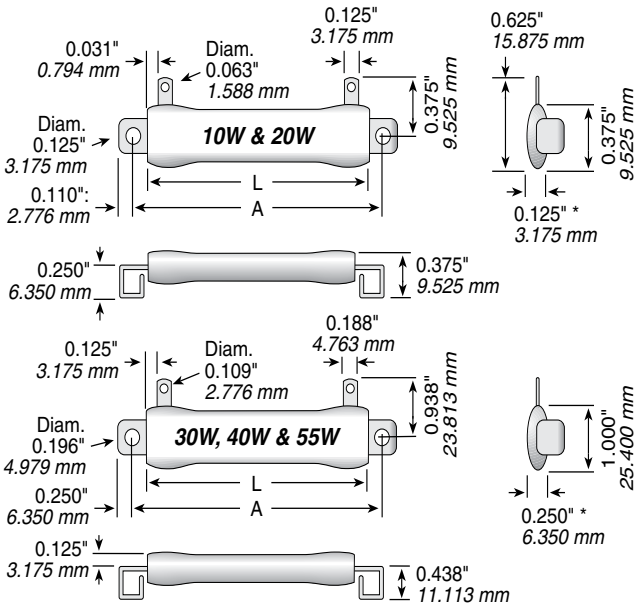

*Reference dimension only; varies according to resistance value.

Note: When resistors are stacked, use washers or spacers as required to insure clearance and improve power dissipation.

Series	Wattage	Ohms	Dimensions (in. / *mm*) Length L	Length A	Max. Voltage*
F10	10	1.0-15K	0.750 / *19.050*	1.000 / *25.400*	187
F20	20	1.0-50K	2.000 / *50.800*	2.313 / *58.750*	815
F30	30	1.0-10K	1.250 / *31.750*	2.000 / *50.800*	281
F40	40	1.0-25K	2.000 / *50.800*	2.750 / *69.850*	655
F55	55	1.0-30K	3.500 / *88.900*	4.250 / *107.950*	1405

Adjustable versions available. Consult Ohmite.
Other sizes available. Consult Ohmite.
Also available in low cost Centohm or Silicone coating. Consult Ohmite.
* Maximum Voltage is based on Ohm's Law [$V=\sqrt{P*R}$] as limited by the resistance value of specified product

ORDERING INFO

Series — RoHS Compliant

■ F 2 0 J 1 R 0 E

Coating	Wattage	Tolerance	Ohms
Blank = Vitreous		F = 1%	1R0 = 1 Ω
C = Centohm		H = 3%	250 = 250 Ω
S = Silicone		J = 5%	1K0 = 1,000 Ω
		K = 10%	25K = 25,000 Ω
			25K5 = 25,500 Ω

MADE-TO-ORDER PARTS

See website for custom core info

Terminal Type — *See "Resistor Terminals for Tubular Cores"*

Tolerance — *J = 5%*

RoHS Compliant

2 5 3 0 T E 5 7 B 1 R 0 0 J E

Series
Vitreous enamel:
25 = 250 Fixed
26 = 260 Adjustable
Silicone ceramic:
45 = 450 Fixed
46 = 460 Adjustable

Wattage & Core Code
See "Core and Terminal Selection"

Mounting Brackets
(user supplies bracket for core TB)
B = Stacking box
S = Stacking stud, std. height
H = Stacking stud high
U = Unit type

Ohms
Example:
1R00 = 1 Ω
250R = 250 Ω
1K00 = 1,000 Ω
25K0 = 25,000 Ω
25K5 = 25,500 Ω

STANDARD PART NUMBERS FOR 250 SERIES

Ohmic value	Part No. (Prefix ➤ / Suffix ▼)	Wattage 10 F10J	20 F20J	30 F30J	40 F40J	55 F55J
1	1R0E	✔	✔	✔	✔	✔
1.5	1R5E			✔	✔	✔
2	2R0E	✔	✔	✔	✔	✔
3	3R0E			✔	✔	✔
4	4R0E				✔	✔
5	5R0E	✔	✔	✔	✔	✔
7.5	7R5E	✔			✔	✔
10	10RE	✔	✔		✔	✔
15	15RE	✔	✔	✔		
20	20RE	✔				
25	25RE	✔	✔	✔	✔	✔
30	30RE	✔				
40	40RE					✔

Ohmic value	Part No. (Prefix ➤ / Suffix ▼)	Wattage 10 F10J	20 F20J	30 F30J	40 F40J	55 F55J
50	50RE	✔		✔	✔	✔
75	75RE			✔		✔
100	100E	✔	✔	✔	✔	✔
150	150E		✔			
200	200E	✔		✔	✔	✔
250	250E		✔	✔	✔	✔
300	300E		✔			
400	400E	✔			✔	✔
500	500E	✔	✔	✔	✔	✔
750	750E			✔	✔	
800	800E		✔			
1,000	1K0E	✔	✔	✔	✔	✔
1,250	1K25E	✔	✔			

Ohmic value	Part No. (Prefix ➤ / Suffix ▼)	Wattage 10 F10J	20 F20J	30 F30J	40 F40J	55 F55J
1,500	1K5E	✔	✔	✔		✔
2,000	2K0E		✔		✔	✔
2,500	2K5E	✔	✔	✔	✔	✔
3,000	3K0E	✔		✔	✔	✔
4,000	4K0E			✔		✔
5,000	5K0E		✔			
6,000	6K0E					
7,500	7K5E		✔			
10,000	10KE				✔	✔
15,000	15KE				✔	
20,000	20KE				✔	
25,000	25KE				✔	
40,000	40KE		✔			

✔ = Standard values; check availability using the worldwide inventory search at www.ohmite.com

270 Series

Vitreous Enamel Power

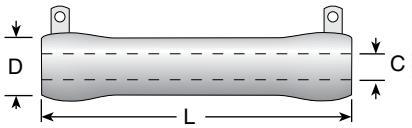

See page 36 for mounting hardware

FEATURES

- Terminals suitable for soldering or bolt connection
- High wattage applications
- Rugged lead free vitreous enamel coating
- Flame resistant coating
- All-welded construction
- RoHS compliant available
- "Fast on" option – see terminal 538, page 37

SPECIFICATIONS

Material

Coating: Lead free vitreous enamel. Very large models (750 watts and up) are supplied in Silicone Ceramic. Also available in low-cost Centohm coating; Consult factory.

Core: Tubular ceramic.

Terminals: Solder coated radial lug. RoHS solder composition is 96% Sn, 3.5% Ag, 0.5% Cu

Derating: Linearly from 100% @ +25°C to 0% @ +350°C.

Electrical

Tolerance:
±5% 1Ω and over (J)
±10% under 1Ω (K)

Power rating: Based on 25°C free air rating.

Overload: 10 times rated wattage for 5 seconds.

Temperature coefficient:
1 to 20Ω: ±400 ppm/°C.
Above 20Ω: ±260 ppm/°C

Dielectric withstanding voltage:
1000 VAC: 12 to 100 watt rating.
3000 VAC: 175 to 225 watt rating (Measured from terminal to mounting bracket)

To calculate max. amps: use the formula $\sqrt{P/R}$

Series	Wattage	Ohms	Dimensions (in. / *mm*) L	D	C	Core Code	Voltage	Standard Terminal
L12	12	0.1-51K	1.75 / 44.4	0.313 / 7.94	0.188 / 4.76	D	565	57
L25	25	0.15-100K	2.0 / 50.8	0.562 / 14.3	0.313 / 7.94	K	625	40
L50	50	0.38-260K	4.0 / 101.6	0.562 / 14.3	0.313 / 7.94	K	1625	40
L100	100	0.23-101K	6.5 / 165.1	0.750 / 19.1	0.50 / 12.7	M	2845	40
L175	175	0.13-101K	8.5 / 215.9	1.125 / 28.6	0.75 / 19.1	P	3595	46
L225	225	0.16-129K	10.5 / 266.7	1.125 / 28.6	0.75 / 19.1	P	4595	46
L500	500	0.38-218K	12.0 / 304.8	2.50 / 63.5	1.75 / 44.5	S	4970	45
L1000	1000	0.69-392K	20.0 / 508.0	2.50 / 63.5	1.75 / 44.5	S	8900	45

Non-Inductive versions available; Other sizes available; Also available in low cost Centohm or Silicone coating; Consult Ohmite.
* Maximum Voltage is based on Ohm's Law [$V=\sqrt{P*R}$] as limited by the resistance value of specified product

Select 270 Type fixed resistors for applications requiring wattage ratings from 12 to 1000 watts.

The 270 Type resistors are equipped with lug terminals suitable for soldering or sturdy bolt connection. When secure mounting is required, the hollow core of these resistors permit fastening with spring-type brackets, thru bolts or thru bolts with slotted-steel brackets.

Suitable for rugged applications, the 270 Type resistors feature all-welded construction and durable lead free vitreous enamel coating. Mounting brackets not included with resistors.

ORDERING INFO

F = Fast on (optional) | Non-inductive: Blank = Standard, N = Non-inductive | RoHS Compliant

■ L ■ ■ 2 5 J 1 0 0 E

Series | Wattage | Tolerance | Ohms

Coating
Blank = Vitreous
C = Centohm
S = Silicone

Tolerance
J = 5%
K = 10%

Ohms
1R0 = 1 Ω
250 = 250 Ω
1K0 = 1,000 Ω
25K = 25,000 Ω
25K5 = 25,500 Ω

MADE-TO-ORDER PARTS

Non-inductive: Blank = Standard, N = Non-inductive | Core Diameter: See "Core and Terminal Selection" | RoHS Compliant

2 7 0 ■ 5 0 K 4 0 5 R 0 0 J E

Coating | Wattage | Terminal Type | Ohms | Tolerance

Coating
270 = Vitreous
470 = Silicone Ceramic

Terminal Type
See "Resistor Terminals for Tubular Cores"

Ohms
R500 = 0.500 Ω
1R00 = 1 Ω
250R = 250 Ω
1K00 = 1,000 Ω
25K0 = 25,000 Ω
25K5 = 25,500 Ω

Tolerance
J = 5%
K = 10%

See website for custom core and terminal info

Power limitations for high resistance values: When resistance exceeds the resistance values listed, derate the Power Rating by 25% to improve reliability:

Power rating	Resistance value
12W	3,900Ω
25W	12,000Ω
50W	35,000Ω
100W	75,000Ω

No power derating necessary for ratings higher than 100W.

STANDARD PART NUMBERS FOR 270 SERIES

Ohmic value	12 Watt		Ohmic value	12 Watt	
0.51	✔	L12JKR51E	180	✔	L12J180E
1	✔	L12J1R0E	270	✔	L12J270E
3.3	✔	L12J3R3E	330	✔	L12J330E
4.7	✔	L12J4R7E	390	✔	L12J390E
10	✔	L12J10RE	470	✔	L12J470E
12	✔	L12J12RE	560	✔	L12J560E
15	✔	L12J15RE	1000	✔	L12J1K0E
22	✔	L12J22RE	1200	✔	L12J1K2E
27	✔	L12J27RE	1500	✔	L12J1K5E
33	✔	L12J33RE	2200	✔	L12J2K2E
47	✔	L12J47RE	2700	✔	L12J2K7E
68	✔	L12J68RE	4700	✔	L12J4K7E
82	✔	L12J82RE	10000	✔	L12J10KE
100	✔	L12J100E	18000	✔	L12J18KE
150	✔	L12J150E	22000	✔	L12J22KE
			51000	✔	L12J51KE

✔ = Standard values; check availability using the worldwide inventory search at www.ohmite.com

Red outlined values supplied in Silicone-Ceramic coatings instead of vitreous enamel.

Ohmic value	Part No. Prefix ➤ / Suffix ▼	Wattage 25 L25J	50 L50J	100 L100J	175 L175J	225 L225J	500 L500J	1000 L1000J
1	1R0E	✔	✔	✔	✔	✔		
2	2R0E	✔	✔	✔	✔	✔		
3	3R0E	✔	✔	✔	✔	✔		
4	4R0E	✔	✔	✔	✔	✔		
5	5R0E	✔	✔	✔	✔	✔		
10	10RE	✔	✔	✔	✔	✔		
15	15RE	✔						
25	25RE	✔	✔	✔	✔	✔		
50	50RE	✔	✔	✔	✔	✔		
75	75RE	✔	✔	✔	✔	✔		
100	100E	✔	✔	✔	✔	✔		
125	125E			✔	✔			
150	150E	✔	✔	✔	✔	✔		
200	200E	✔	✔					
250	250E	✔	✔	✔	✔	✔		
500	500E	✔	✔	✔	✔	✔		
750	750E	✔	✔	✔		✔		
800	800E	✔	✔					
1,000	1K0E	✔	✔	✔	✔	✔		
1,500	1K5E	✔	✔	✔		✔		
2,000	2K0E	✔	✔	✔	✔	✔		

Ohmic value	Part No. Prefix ➤ / Suffix ▼	Wattage 25 L25J	50 L50J	100 L100J	175 L175J	225 L225J	500 L500J	1000 L1000J
2,500	2K5E	✔	✔	✔		✔		
3,000	3K0E	✔	✔	✔	✔	✔		
3,500	3K5E	✔						
4,000	4K0E	✔	✔					
5,000	5K0E	✔	✔	✔	✔	✔		
6,000	6K0E	✔						
7,500	7K5E	✔	✔	✔		✔		
10,000	10KE	✔	✔	✔	✔	✔		
12,000	12KE	✔						
15,000	15KE	✔	✔	✔		✔		
20,000	20KE	✔	✔	✔		✔		
25,000	25KE	✔	✔			✔		
30,000	30KE			✔		✔		
35,000	35KE		✔					
40,000	40KE	✔				✔		
50,000	50KE	✔	✔	✔		✔		
60,000	60KE					✔		
75,000	75KE		✔		✔	✔		
100,000	100KE	✔	✔	✔	✔	✔		
150,000	150KE		✔					
200,000	200KE		✔					
250,000	250KE		✔					

1-866-9-OHMITE • Int'l 1-847-258-0300 • Fax 1-847-574-7522 • www.ohmite.com • info@ohmite.com

280 Series

Corrib® Fixed and Adjustable Vitreous Enamel Power

Corrib® resistors are ideal for applications involving high currents at very low resistance values—as low as 0.1Ω for the 300 Watt unit. These large, heavy-duty resistors are designed to withstand frequent start-stop cycles characteristic of motor starting, dynamic braking and other similar applications. Special order units are available to accommodate up to 1500 watts.

Corribs® are manufactured with corrugated resistive wire. To accelerate cooling, the wire is securely fused to the ceramic core by the protective vitreous enamel coating to improve durability. Corrib resistors are hollow-core units which can be securely fastened to chassis surfaces with thru bolts and brackets.

FEATURES

- Also available in low cost Centohm or Silicone coating. Consult Ohmite.
- Ribbed construction aids in rapid cooling.
- Designed for equipment requiring low resistance loads at low ohmic values and high current capacity.
- Especially constructed for motor starting, dynamic braking, etc.
- RoHS compliant product available. Add "E" suffix to part number to specify.

SPECIFICATIONS

Material

Coating: Lead free vitreous enamel except for extreme low resistance 35 watt models, and very large models (750 watts and up), which are supplied in Silicone Ceramic.

Core: Tubular Ceramic.

Terminals: Tinned lug with hole. RoHS solder composition is 96% Sn, 3.5% Ag, 0.5% Cu

Adjustable Lug: Supplied with adjustable 300 watt models. Part No. 1974-A or 1974-B.

Electrical

Tolerance: ±10% (K)

Power rating: Based on 25°C free air rating.

Derating: Linearly from 100% @ +25°C to 0% @ +400°C.

Fixed 35 watt

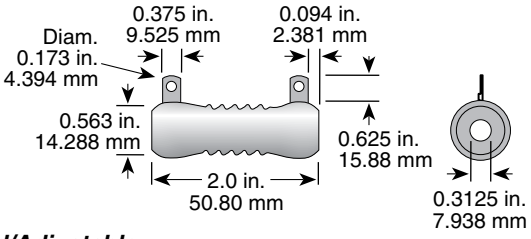

Fixed/Adjustable 300 watt*

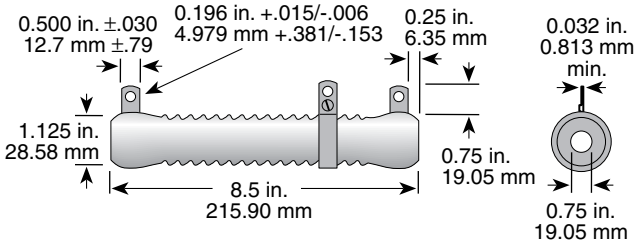

** for values over 0.16Ω, terminal dimensions same as 35 watt at above.*

Overload: 10 times rated wattage for 5 seconds.

Temperature coefficient: ±400 ppm/°C.

Dielectric withstanding voltage: 1000 VAC measured from terminal to mounting bracket.

To calculate max. amps: use the formula $\sqrt{P/R}$

ORDERING INFO

Coating
Blank = Vitreous
C = Centohm
S = Silicone

RoHS Compliant

C 3 0 0 K R 1 0 E

Series
C = Fixed
E = Adjustable

Wattage

Tolerance
K = 10%

Ohms
example:
1R0 = 1 Ω
250 = 250 Ω
1K0 = 1,000 Ω
25K = 25,000 Ω
25K5 = 25,500 Ω

MADE-TO-ORDER PARTS

2 8 0 3 0 0 P 4 5 1 2 R 0 0 K

Series
280 = Fixed
230 = Adjustable

Wattage & Core Code
See "Core and Terminal Selection"

Terminal Type
See "Resistor Terminals for Tubular Cores"

Ohms
Example:
R0200 = 0.02 Ω
R2000 = 0.2 Ω
2R500 = 2.5 Ω
10R00 = 10 Ω

Tolerance
F = 1%
H = 3%
J = 5%
K = 10% *(std.)*

See website for custom core info

STANDARD PART NUMBERS FOR 280 SERIES

Ohmic value	Part No. Prefix ➤ Suffix ▼	Wattage 35 C35K	300 C300K	300 E300K (Adjustable)
0.02	R02E			
0.04	R04E			
0.06	R06E			
0.08	R08E			
0.1	R10E		✔	✔
0.12	R12E		✔	✔
0.15	R15E			
0.16	R16E			✔
0.2	R20E		✔	✔
0.25	R25E		✔	✔
0.3	R30E			
0.31	R31E		✔	✔
0.4	R40E		✔	✔
0.5	R50E		✔	✔
0.6	R60E			
0.63	R63E		✔	✔
0.8	R80E			✔
1.0	1R0E		✔	✔
1.2	1R2E		✔	
1.25	1R25E			
1.6	1R6E		✔	✔
2.0	2R0E		✔	✔
2.5	2R5E		✔	✔
3.1	3R1E		✔	✔
4.0	4R0E		✔	✔
5.0	5R0E		✔	✔
6.3	6R3E		✔	✔
8.0	8R0E		✔	✔
10.0	10RE		✔	✔
12.0	12RE		✔	✔
16.0	16RE		✔	✔
20.0	20RE		✔	✔
100.0	100E			

Other Available Sizes (Partial List)

Prefix*	Wattage	Core Length	Core O.D.	Min. Ohms	Max. Ohms
C90	90	4.0"	0.563"	0.021	12
C100	100	3.5"	0.75"	0.021	11
C110	110	5.0"	0.563"	0.029	16
C135	135	6.0"	0.563"	0.028	21
C150	150	5.0"	1.0"	0.043	27
C160	160	6.0"	0.75"	0.038	26
C180	180	6.5"	0.75"	0.031	29
C190	190	6.0"	1.0"	0.056	35
C215	215	7.0"	1.0"	0.068	43
C220	220	6.0"	1.125"	0.063	39
C270	270	5.0"	1.5"	0.065	41
C375	375	10.5"	1.125"	0.130	80
C500	500	10.5"	1.625"	0.190	117
C750	750	12.0"	2.5"	0.310	198
C1000	1000	15.0"	2.5"	0.410	258
C1500	1500	20.0"	2.5"	0.560	358

*Substitute "C" in prefix with "E" for adjustable versions.

✔ = Standard values; check availability using the worldwide inventory search at www.ohmite.com

RESISTOR HARDWARE

Thru Bolts Mounting Brackets for 300 Watt Corrib

Includes 2 each bracket, bolt, washers (centering, mica, lock) and nut. Note: Single unit mounting contains 1 each bolt and nut; 2 each all Washers.

Part No. Slotted	Part No. Elongated	No. of Resistors	Moun. Derat. %
6110-8 1/2	**6126-P-8 1/2**	1	100%
-	**6127-P-8 1/2**	2	83%
-	**6128-P-8 1/2**	3	80%
-	**6129-P-8 1/2**	4	80%

Lugs for 300 Watt Adjustable Corrib

Part No.	Resistance	Part No.	Resistance
1974-A	0.40	**1974-B**	0.10
1/16 wire	0.50	1/8 wire	0.12
	0.63		0.16
	1.00		0.20
	1.50		0.25
	1.60		0.31
	2.00		0.80
	2.50		1.20
	3.10		
	4.00		
	5.00		
	6.30		
	8.00		
	10.00		
	12.00		
	16.00		
	20.00		
	25.00		
	30.00		
	48.00		
	50.00		

Mounting Hardware

See ohmite.com for pictoral views

For 200, 210, 270 and 280 Series

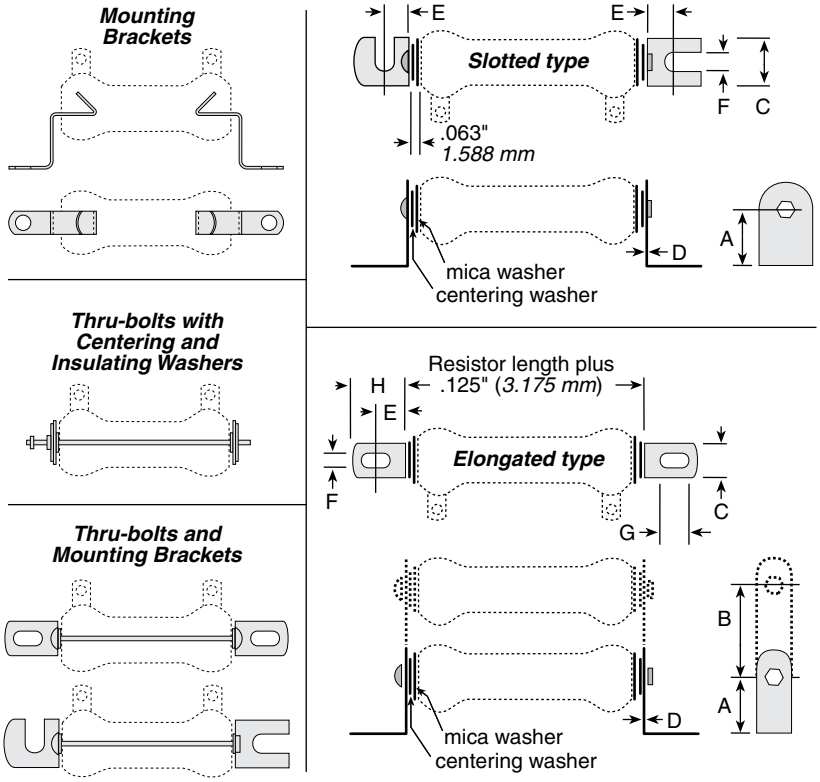

THRU-BOLTS AND MOUNTING BRACKETS

Sturdy plated steel brackets, along with thru-bolts, centering washers and insulating washers (included), allow for secure mounting of **210** type and **270** type resistors. Mounting brackets are available in either slotted (one with end-slot/one with side-slot) or elongated styles.

Type	Dimensions								Std.	
Slotted	A	B	C	D	E	F	G	H	Core Length	Bolt Length
6101—E	0.781"	—	0.75"	0.031"	0.438"	0.25"	—	—	1 3/4"	2 1/4"
6104—E	0.781"	—	0.75"	0.031"	0.438"	0.25"	—	—	2"	2 1/2"
6110—E	1"	—	1.125"	0.063"	0.813"	0.313"	—	—	2 1/4"	2 3/4"
Elongated									4"	4 3/4"
6120—E	1"	—	0.5"	0.031"	0.422"	0.219"	.438	.750	6"	6 5/8"
6126—E	1.5"	—	1.25"	0.063"	0.438"	0.281"	.563	.875	6 1/2"	7"
6127—E	1.5"	2"	1.25"	0.063"	0.438"	0.281"	.563	.875	8 1/2"	9 1/8"
6128—E	1.5"	2"	1.25"	0.063"	0.438"	0.281"	.563	.875	10 1/2	11 1/8
6129—E	1.5"	2"	1.25"	0.063"	0.438"	0.281"	.563	.875		

ORDERING INFORMATION

Slotted — RoHS Compliant

6 1 0 4 - M - 6 1/2 - E

No. of Resistors	Bracket	Core Code	Standard Core Length (in)
1	6101	K	2
2	6102		4
3	6103		6
1	6104	M	2
2	6105		4
3	6106		6 1/2
1	6110A	N	4
2	6111A		6
3	6112A		
1	6110	P	8 1/2
2	6111		10 1/2
3	6112		
1	6113B	R	8 1/2
			10 1/2
			11 3/4
1	6114	S	12
			15
			20

Elongated — RoHS Compliant

6 1 2 1 - D - 1 3/4 - E

No. of Resistors	Bracket	Core Code	Standard Core Length (in)
1	6120	D	1
2	6121	H	1 3/4
		K	2
			2 1/4
			4
1	6122	M	2
2	6123	N	4
3	6124		6 1/2
4	6125		
1	6126	P	8 1/2
2	6127		10 1/2
3	6128		
4	6129		

MOUNTING BRACKETS

Brackets fit inside cores of **200, 210 and 270** type resistors and remain in place by spring tension. Standard brackets are plated steel and have no suffix to part number. Spring steel brackets are indicated with an "S" suffix following part number.

Part number Standard	Spring steel	Mtg screw size (max.)	For resistors (power ratings)
✚ 5E	✤ 5SE	6	8, 12 watt
✔ 7E	✤ 7SE	6	20 watt
✚ 9E	✤ 9SE	6	25, 50, 75 watt
✚ 12E	✚ 12SE	10	100 watt
✚ 18E	✚ 18SE	10	175, 225 watt

THRU BOLTS

Thru-Bolts, with centering mica insulating washers, permit perpendicular mounting of **200, 210 and 270** type resistors to panels up to 0.25" thick.

Part No.	Bolt size Length	No.	For resistors (power rating)
✤ 7PA5E	1.75"	8	8 watt
✚ 7PA10E	2.5"	8	12 watt
✤ 7PA20E	2.75"	8	20 watt
✚ 7PA25E	2.75"	10	25 watt
✚ 7PA50E	4.75"	10	50 watt
✤ 7PA75E	6.75"	10	75 watt
✚ 7PA100E	7.313"	10	100 watt
✚ 7PA160E	9.5"	0.25"	175 watt
✚ 7PA200E	11.5"	0.25"	225 watt

WASHERS

Metal Centering

Part No.	Diameter Outer	Diameter Inner	For max. screw size	For resistors (power ratings)
✚ 6000E	0.563"	0.190	#10	25, 50, 75 watt
✚ 6001E	0.75"	0.190	#10	100 watt
✚ 6003E	1.125"	0.250	0.25"	175, 225 watt

Mica insulating

Part No.	Diameter Outer	Diameter Inner	For resistors (power ratings)
✚ 6010E	0.75"	0.063"	25, 50, 75 watt
✚ 6011E*	0.75"	0.313"	25, 50, 75 watt
✤ 6012E	1"	0.063"	100 watt
✔ 6013E*	1"	0.5"	100 watt
✤ 6014E	1.25"	0.063"	core 1" O.D. x 0.625" I.D.
✚ 6015E*	1.25"	0.625"	core 1" O.D. x 0.625" I.D.
✔ 6016E	1.5"	0.063"	175, 225 watt
✚ 6017E*	1.5"	0.75"	175, 225 watt

* Use with centering washers.

ADJUSTABLE LUGS FOR 210 SERIES

One standard screwdriver type adjustable lug is supplied with each unit.
Two types of lugs can be ordered separately: standard or with a silver contact button; both types are available with a screwdriver type lug.

Resistor core diam. (in. / *mm*)	Standard part numbers Standard	Silver
0.313 / *7.94*	✤ 2115E	✤ 2116E
0.563 / *14.3*	✚ 2121E	✔ 2123E
0.750 / *19.05*	✚ 2125E	✤ 2127E
1.125 / *28.58*	✔ 2133E	✤ 2135E

Double thumb screw Lug
(Part Number 2160E) The double thumb screw adjustable lug permits easier adjustment and less chance of damage to resistance wire. Available for 1.125" cores only.

✚ = Most popular Standard values
✔ = Standard values
✤ = Non-Standard values subject to minimum handling charge per item

TYPE 57

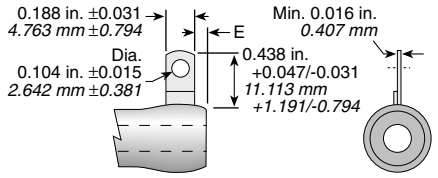

TYPE 47 AND 48

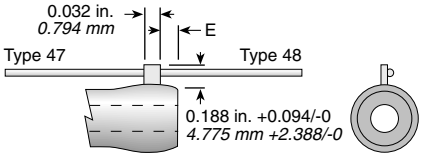

TYPE 48R

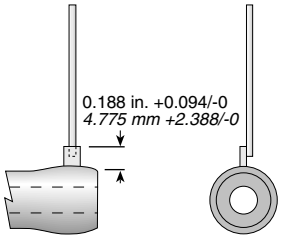

TYPE 40 AND 40A

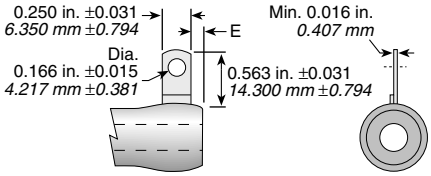

TYPE 44, 44A, 45, 45A, 45B

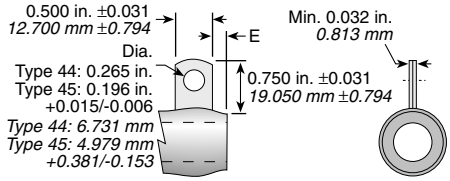

TYPE 58

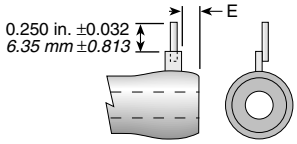

TYPE 46 AND 46A

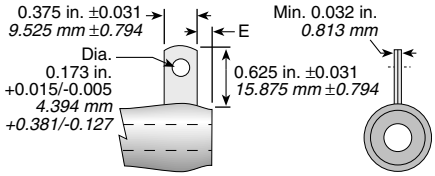

TYPE 538

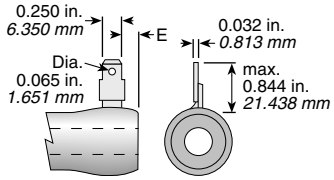

TYPE 126 AND 126R

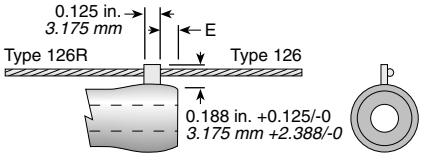

TYPE 535

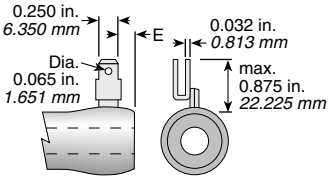

TYPE 532

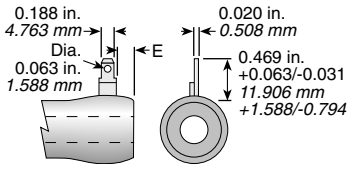

OTHER TERMINALS

Type 49
.250 *(6.35mm)* wide x 0.313 *(7.950mm)* .166 *(4.217mm)* dia. hole. Solder coated.

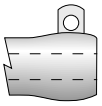

Type 51
.125 *(3.175mm)* wide x height as specified. 0.072 *(1.829mm)* hole. Solder coated.

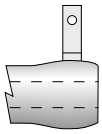

Type 68
.188 *(4.775mm)* wide x 0.531 *(13.488mm)* high. Solder coated.

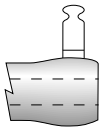

Type 50
Untinned lug intended for welded connection. 0.063 *(1.600mm)* x height as specified.

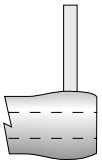

Type 52
For "wire wrap" (Keller, Gardner-Denver T.M.)

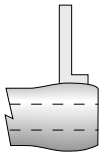

Type 69
.125 *(3.175mm)* wide x 0.375 *(9.525mm)* high. Solder coated.

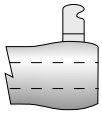

(continued)

Application Notes

Resistor Terminals for Tubular Cores

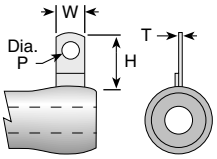

TERMINAL DIMENSIONS

Terminal Type	W in.	W (mm)	H in.	H (mm)	T in.	T (mm)	P in.	P (mm)	Core Diameter Range in.	Core Diameter Range (mm)
40, 40A	0.25 ± 0.031	*(6.35 ± 0.794)*	0.563 ± 0.031	*(14.3 ± 0.794)*	min 0.016	*(0.407)*	0.166 ± 0.015	*(4.217 ± 0.381)*	0.313-1.125	*(7.95-28.575)*
44, 44A	0.5 ± 0.031	*(12.7 ± 0.794)*	0.750 ± 0.031	*(19.05 ± 0.794)*	min 0.032	*(8.13)*	0.265 +0.015/ -0.006	*(6.731 +0.381/ -0.153)*	0.75-1.125	*(19.05-28.575)*
45, 45A, 45B	0.5 ± 0.031	*(12.7 ± 0.794)*	0.750 ± 0.031	*(19.05 ± 0.794)*	min 0.032	*(8.13)*	0.196 +0.015/ -0.006	*(4.979 +0.381/ -0.153)*	0.75-1.125	*(19.05-28.575)*
46, 46A	0.375 ± 0.031	*(9.525 ± 0.794)*	0.625 ± 0.031	*(15.875 ± 0.794)*	min 0.032	*(8.13)*	0.173 +0.015/ -0.005	*(4.394 +0.381/ -0.127)*	0.563-1.50	*(14.3-38.1)*
47, 48, 48R	0.125 ± 0.031	*(3.175 ± 0.794)*	0.188 +0.094/-0	*(4.775+2.38/-0)*	N/A		N/A		0.0210-0.563	*(5.25-14.3)*
57	0.188 ± 0.031	*(4.763 ± 0.794)*	0.438 +0.047/-0.031	*(11.113 +1.191/-0.794)*	min 0.016	*(0.407)*	N/A		0.25-0.75	*(6.35-19.05)*
58	0.125 ± 0.031	*(3.175 ± 0.794)*	0.188 +0.094/-0	*(4.775+2.38/-0)*	N/A		N/A		0.0210-0.563	*(5.25-14.3)*
126, 126R	0.125 ± 0.031	*(3.175 ± 0.794)*	0.188 +0.094/-0	*(4.775+2.38/-0)*	N/A		N/A		0.313-1.125	*(7.95-28.575)*
532	0.188 ± 0.031	*(4.763 ± 0.794)*	0.469 +0.063/-0.031	*(11.906 +1.588/-0.794)*	0.020	*(0.508)*	0.063	*(1.588)*	0.313-1.125	*(7.95-28.575)*
535	0.25 ± 0.031	*(6.35 ± 0.794)*	max 0.875	*(22.225)*	0.032	*(8.13)*	0.065	*(1.651)*	0.313-2.5	*(7.95-63.5)*
538	0.25 ± 0.031	*(6.35 ± 0.794)*	max 0.844	*(21.438)*	0.032	*(8.13)*	0.065	*(1.651)*	0.313-2.5	*(7.95-63.5)*

40A- Has screw #6-32 x .5 with 2 nuts and washers
44A- Has screw 20 x .625 with 2 nuts and washers
45A- Has screw #8-32 x .625 with 2 nuts and washers
45B- Has screw #10-32 x .625 with 2 nuts and washers
46A- Has screw #8-32 x .625 with 2 nuts and washers

EDGE DISTANCE—DIMENSION "E"

	Core O.D. in.	mm	in.	mm	in.	mm	in.	mm	in.	mm	in.	mm	in.	mm	in.	mm	in.	mm	in.	mm
Terminals	.250	*6.350*	.313	*7.938*	.438	*11.113*	.563	*14.288*	.750	*19.050*	1.00	*25.40*	1.125	*28.575*	1.500	*38.100*	1.625	*41.275*	2.500	*63.500*
40-40A-49-50-57-68-69-126-126R-532	.031	*.794*	.094	*2.381*	.094	*2.381*	.094	*2.381*	.125	*3.175*	.156	*3.969*	.219	5.556	—	—	—	—	—	—
44-44A-45-45A-45B-46-46A	—	—	—	—	—	—	.250	6.350	.250	6.350	.250	6.350	.250	6.350	—	—	—	—	—	—
535-538	—	—	.125	*3.175*	.125	*3.175*	.125	*3.175*	.125	*3.175*	.156	*3.969*	.219	*5.556*	.250	*6.350*	.250	*6.350*	.500	*12.700*

Dimension "E" can be varied and is often reduced for cores 2.00 *(50.80mm)* or less in length or sometimes increased for greater leakage distance to ground. Tolerance on "E" is ± 0.016 *(.397mm)* up to 0.125 *(3.175mm)* and ± 0.063 *(1.588mm)* above.

TYPE 140

For Cores 0.438 (11.113mm) to 1.125 (28.575mm) O.D.

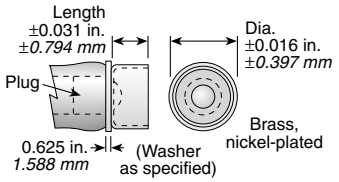

Ferrule Diameter In.	Ferrule Diameter mm	Ferrule Length In.	Ferrule Length mm	Catalog No. No Washer	Catalog No. With Washer
.563	*14.288*	.500	*12.700*	140/9*	140/19
.688	*17.463*	.563	*14.288*	140/11*	140/01
.813	*20.638*	.500	*12.700*	140/13†	140/03
1.125	*28.575*	.500	*12.700*		140/18

* Up thru 0.563 *(14.288mm)* D core.
†Up thru 0.750 *(19.050mm)*

Check product availability using the Worldwide Inventory Search at ohmite.com

TYPE 141

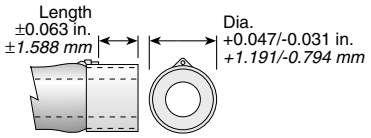

Ferrule Diameter In.	Ferrule Diameter mm	Ferrule Length In.	Ferrule Length mm	Catalog No.	Core O.D. In.	Core O.D. mm
.625	*15.875*	.625	*15.875*	141/10	.563	*14.288*
.813	*20.638*	.688	*17.463*	141/13	.750	*19.050*
1.062	*26.988*	.688	*17.463*	141/17	1.000	*25.400*
1.188	*30.163*	.688	*17.463*	141/19	1.125	*28.575*

Ferrules are brass, natural finish.

TYPE 63

Cores 0.563 *(14.288mm)* to 0.750 *(19.050mm)* O.D.--- Cat No. 63/12
Cores 1.000 *(25.400mm)* to 1.125 *(28.575mm)* O.D --- Cat No. 63/18

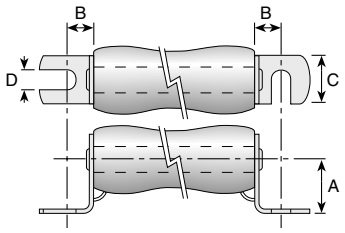

Cat. No.	A ±.031 (.794) In.	A mm	B ± .031 (.794) In.	B mm	C ±.031 (.794) In.	C mm	D (Min.) In.	D mm
63/12	.781	*19.844*	.438	*11.113*	.750	*19.050*	.250	*6.350*
63/18	.875	*22.225*	.813	*20.638*	1.125	*28.575*	.313	*7.938*

HPW Series

High Precision Welded Axial and Radial

FEATURES

- High precision
- All welded construction
- Molded thermosetting plastic bobbin
- Wide ohmic range combined with tight tolerance
- Excellent long-term stability
- Inherent low temperature coefficient
- Extremely low Thermal EMF
- Low voltage coefficient
- Low noise

SPECIFICATIONS

Minimum Values: 0.1Ω for ±1% and ±0.5%; 10Ω for ±0.1% and tighter

Resistance Tolerance: ±0.005%, ±0.01%, ± 0.02%, ±0.05%, ±0.1%, ±0.5%, and ±1%, depending on style and value

Temperature Coefficient (TCR): ±10ppm/°C standard for 10Ω and above. Higher TC's on low ohmic values. TC match to ±1ppm/°C. High TC's upto +6000ppm/°C are available

Standard temperature range: –10°C to +80°C

Working temperature range: –60°C to +145°C

CONSTRUCTION

All Welded Construction: The combination of all welded construction and compatible materials provide the most reliable means of interconnects possible.

Butt Weld of Tab to Terminal: A tab material of 800 ohm alloy (the same as the resistance wire) is butt welded to the terminal and molded deep into the resistor bobbin. This design parameter assures the least possible DC transients due to thermal EMF.

Bobbin Design: The ratio of the height of the Pi wall to the width of the Pi and to the diameter of the bobbin mandrel are critical to the basic stability of a wirewound resistor. These parameters are optimized for each wire size, wattage size and range of resistor values.

Encapsulation Material: Both the bobbin and the final encapsulation material are thermosetting alkyd polyester. The resulting resistor is virtually a homogeneous mass with an identical coefficient of expansion which is unaffected by the most violent of temperature cycling. All types are unaffected by application of solvents.

Terminal Materials: The standard terminal material is hot solder dipped copper (C5N). Other available materials are bare nickel (N1N) and gold plated nickel (N2N).

Axial

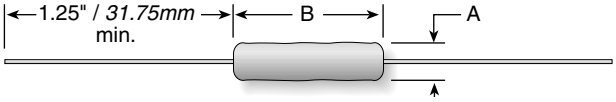

Round Radial

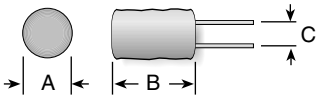

Flat Radial

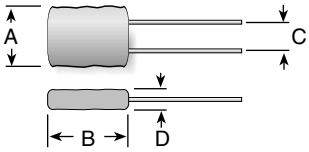

Model	Dim. C	Dim. D
101P	0.150 / *3.81*	0.110 / *2.79*
102P	0.125 / *3.18*	0.125 / *3.18*
203PC	0.150 / *3.81*	—
203PA	0.200 / *5.08*	—
305PA	0.200 / *5.08*	—
505PA	0.300 / *7.62*	—

ULTRONIX® A Division of Ohmite Mfg. Co.

Type	Max. Ohms	Power Rating @125°C (Watts)	Max. Volts	Overall Dimensions (±.020 in./ ±.508 *mm*) A	B	AWG	Lead Diam.
123A	111k	0.05	150	0.100 / *2.54*	0.230 / *5.84*	24*	0.020 / *0.508*
118A	192k	0.05	150	0.130 / *3.30*	0.180 / *4.57*	26	0.016 / *0.406*
122A	199k	0.05	150	0.123 / *3.12*	0.218 / *5.54*	24	0.020 / *0.508*
102A	334k	0.10	150	0.110 / *2.79*	0.250 / *6.35*	24	0.020 / *0.508*
102AL	334k	0.10	150	0.130 / *3.30*	0.313 / *7.95*	24	0.020 / *0.508*
101A	410k	0.10	300	0.130 / *3.30*	0.375 / *9.53*	22*	0.026 / *0.660*
153A	435k	0.10		0.150 / *3.81*	0.245 / *6.22*	22	0.026 / *0.660*
103A	633k	0.10	150	0.150 / *3.81*	0.300 / *7.62*	22	0.026 / *0.660*
135A	750k	0.10		0.160 / *4.06*	0.500 / *12.70*	22	0.026 / *0.660*
105A	820k	0.125		0.150 / *3.81*	0.310 / *7.87*	22	0.026 / *0.660*
184A	820k	0.125	300	0.187 / *4.75*	0.375 / *9.53*	22	0.026 / *0.660*
185A*	961k	0.125	300	0.187 / *4.75*	0.500 / *12.70*	22	0.026 / *0.660*
202A	968k	0.25	200	0.250 / *6.35*	0.310 / *7.87*	22	0.026 / *0.660*
204A	1.42 M	0.25		0.250 / *6.35*	0.375 / *9.53*	20	0.032 / *0.813*
203A	1.7 M	0.25	200	0.250 / *6.35*	0.343 / *8.71*	20	0.032 / *0.813*
205A*	1.93 M	0.33	400	0.250 / *6.35*	0.500 / *12.70*	20*	0.032 / *0.813*
207A*	3.0 M	0.50	800	0.250 / *6.35*	0.750 / *19.05*	20*	0.032 / *0.813*
308A	3.0 M	0.60	800	0.312 / *7.93*	0.810 / *20.57*	20	0.032 / *0.813*
210A*	4.10 M	0.50	800	0.250 / *6.35*	1.00 / *25.40*	20	0.032 / *0.813*
307A	5.63 M	0.60		0.375 / *9.53*	0.750 / *19.05*	20	0.032 / *0.813*
310A	7.68 M	1.00	800	0.375 / *9.53*	1.00 / *25.40*	20	0.032 / *0.813*
505A	10 M	1.00		0.500 / *12.70*	0.500 / *12.70*	20	0.032 / *0.813*
510A*	24 M	1.25	800	0.500 / *12.70*	1.00 / *25.40*	20	0.032 / *0.813*
515A*	35 M	1.50	1200	0.500 / *12.70*	1.50 / *38.10*	20	0.032 / *0.813*
517A	43 M	1.75	1200	0.500 / *12.70*	1.75 / *44.45*	20	0.032 / *0.813*
520A*	43 M	2.00	1200	0.500 / *12.70*	2.00 / *50.8*	20	0.032 / *0.813*
101P	453k	0.125	150	0.300 / *7.62*	0.320 / *8.13*	22	0.026 / *0.660*
102P	821k	0.125	150	0.250 / *6.35*	0.250 / *6.35*	22*	0.026 / *0.660*
203PC	1.59 M	0.25	150	0.250 / *7.92*	0.312 / *7.93*	22	0.026 / *0.660*
203PA	1.48 M	0.25	150	0.270 / *6.86*	0.320 / *8.13*	22	0.026 / *0.660*
305PA	3.3 M	0.50		0.375 / *9.53*	0.500 / *12.70*	20	0.032 / *0.813*
505PA	9.5 M	1.00		0.500 / *12.70*	0.500 / *12.70*	20	0.032 / *0.813*

**Available in hermetically sealed*

ORDERING INFORMATION

2 0 3 A 1 M 7 0 0 T

Type	Format*	Resistance	Tolerance
	A, AL = axial	1R000 = 1 Ω	T = 0.01%
	P = flat radial	10R00 = 10 Ω	Q = 0.02%
	PA, PC = round radial	100R0 = 100 Ω	A = 0.05%
		1K000 = 1000 Ω	B = 0.1%
		10K00 = 10 KΩ	F = 1.0%
		100K0 = 100 KΩ	
		1M700 = 1.7 MΩ	

**Not every format is available in every wattage*

Check product availability at **www.ohmite.com**

Our friendly Customer Service team can be reached at 866-9-OHMITE

HSP Series

Hermetically Sealed Precision Ultra-High Stability Axial Terminals

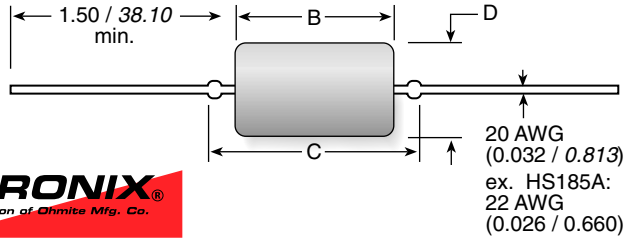

ULTRONIX® A Division of Ohmite Mfg. Co.

Model	Maximum Resistance Value* (ohms)	Power Rating @ 25°C (watts)	Maximum Voltage (volts)	Dimensions (in./*mm*) D ±0.010/*0.254***	B ±0.020/*0.508*	C ±0.030/*0.762*
HS185A	1.0M	0.125	300	0.187 / *4.75*	0.500 / *12.70*	0.625 / *15.88*
HS205A	1.4M	0.25	300	0.250 / *6.35*	0.500 / *12.70*	0.562 / *14.27*
HS207A	2.8M	0.40	600	0.250 / *6.35*	0.750 / *19.05*	0.812 / *20.62*
HS210A	3.0M	0.50	600	0.250 / *6.35*	1.00 / *25.40*	1.063 / *27.00*
HS308A	5.6M	0.60	600	0.375 / *9.52*	0.820 / *20.80*	0.920 / *23.35*
HS310A	7.6M	0.80	600	0.375 / *9.52*	1.00 / *25.40*	1.050 / *26.67*
HS510A	24M	1.00	600	0.500 / *12.70*	1.05 / *25.40*	1.220 / *30.99*
HS515A	35M	1.25	600	0.500 / *12.70*	1.50 / *38.10*	1.605 / *40.77*
HS520A	43M	1.50	900	0.500 / *12.70*	2.00 / *50.80*	2.160 / *54.86*

**Minimum Value = 10Ω **Clear sleeving available, add 0.040"/ 1.016mm to body diam.*

FEATURES

- Accuracy to ±0.001% absolute
- Shelf life to 10 ppm/year
- Temperature coefficient to ±3 ppm/°C, -10°C to +80°C
- Low voltage coefficient
- Low noise
- Extremely low thermal EMF
- Available in 4-terminal on HS500 series
- Oil-filled version available

Part Marking:

- Ohmite
- Model
- Resistance value
- Resistance tolerance
- Date code

ORDERING INFORMATION

H S 1 8 5 A SL 1 M 0 0 0 T

Type

Wattage
185 = 0.125W
205 = 0.25
207 = 0.40
210 = 0.50
308 = 0.60
310 = 0.80
510 = 1.00
515 = 1.25
520 = 1.50

Oil-Filled
A = Non oil-filled
F = Oil-filled

Sleeving
SL = with sleeving
blank = without

Resistance
1R000 = 1 Ω
10R00 = 10 Ω
100R0 = 100 Ω
1K000 = 1000 Ω
10K00 = 10 KΩ
100K0 = 100 KΩ
1M000 = 1 MΩ

Tolerance
T = 0.01%
Q = 0.02%
A = 0.05%
B = 0.1%
F = 1.0%

P Series

Epoxy Molded Precision Wirewound Axial Terminals

RoHS Compliant

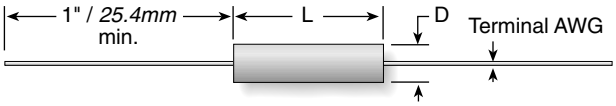

Series	Wattage	Diam. (in./*mm*)	Length (in./*mm*)	Lead ga.
PE	0.125	0.125 / *3.18*	0.250 / *6.35*	22
PF	0.250	0.187 / *4.75*	0.375 / *9.53*	22
PA	0.500	0.250 / *6.35*	0.500 / *12.7*	22
PG	0.750	0.250 / *6.35*	0.750 / *19.1*	20
PB	0.900	0.375 / *9.53*	1.000 / *25.4*	20
PC	1.500	0.375 / *9.53*	1.000 / *25.4*	20
PD	2.000	0.500 / *12.7*	1.500 / *38.1*	20

ORDERING INFORMATION

E = RoHS compliant

P A F 1 0 0 0 R E

P Series

Wattage
E = 0.125W
F = 0.25W
A = 0.5W
G = 0.75W
B = 0.9W
C = 1.5W
D = 2.0W

Tolerance
Z = 0.005%
T = 0.010%
Q = 0.020%
A = 0.050%
B = 0.100%
C = 0.250%
D = 0.500%
F = 1.000%

Resistance
1R000 = 1Ω
10R00 = 10Ω
100R0 = 100Ω
1000R = 1000Ω
10K00 = 10KΩ
100K0 = 100KΩ
1M000 = 1MΩ

Check product availability at **www.ohmite.com**

Ohmite's P Series Epoxy molded Precision Wirewound Resistors are designed to meet the exacting requirements of Military Specification MIL-R-93. The P Series offers high stability and low Temperature Coefficient of Resistance (TCR). These resistors offer tolerances as accurate as ±0.005% and Temperature Coefficients of Resistance (TCR) as low as ±2PPM/°C in a wide range of resistance values.

FEATURES

- Wide Range of Precise Tolerances (±0.005% to ±1%).
- Low Inductance.
- RoHS Compliant.
- Axial configuration convenient for PCB and hard wiring applications.

SPECIFICATIONS

Material

Terminals: Tinned Copper

Encapsulation: Silicone Molding Compound

Electrical

Resistance range: 1Ω to 15MΩ

Standard Tolerances: 0.005%, 0.01%, 0.02%, 0.05%, 0.1%, 0.25%, 0.5%, and 1%

Temperature Coefficient of Resistance, 0°C to 85°C:
1Ω to <10Ω: ±25 PPM/°C
10 Ω to <100Ω: ± 15 PPM/°C
≥100Ω: ±10 PPM/°C

Operating Temperature Range: -65°C to 145°C

Temperature Compensating TCR: from +80 through +6000 PPM

TCR Matching: to ±0.5 PPM/°C at 25°C

DERATING

P Series Resistors must be derated for tolerances below 0.1% and for elevated ambient temperatures. Choose the curve corresponding to the desired tolerance. Determine the maximum allowed percentage of rated power from the graph based on the maximum ambient temperature expected during use.

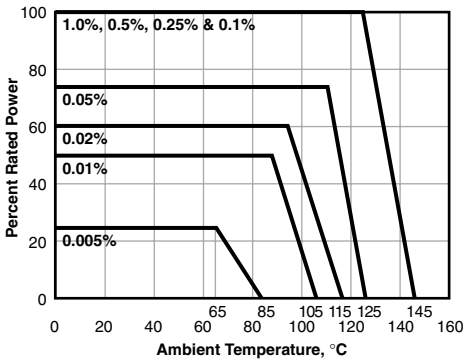

1-866-9-OHMITE • Int'l 1-847-258-0300 • Fax 1-847-574-7522 • www.ohmite.com • info@ohmite.com

TWM/TWW Series

Ceramic Housed Radial Terminal Power

The TWM/TWW series radial terminal power resistors offer significant board space savings over axial terminal products. Generated heat is also kept away from the circuit board.

They are recommended for commercial applications requiring low cost.

FEATURES

- Economical Commercial Grade for general purpose use
- Wirewound and Metal Oxide construction
- Wide resistance range
- Flameproof inorganic construction

DERATING

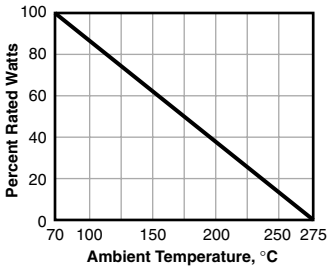

SPECIFICATIONS

Material
Housing: Ceramic
Core: Fiberglass or metal oxide
Filling: Cement based
Electrical
Tolerance: 5% standard
Temperature coeff.:
.01-20Ω ±400ppm/°C
20-10Ω ±350ppm/°C
Dielectric withstanding voltage:
1,000VAC
Short time overload:
TWW: 10x rated power for 5 sec.
TWM: 5x rated power for 5 sec.
Operating Temp.: -55°C to 275°C
Storage Temp.: 6°C to 36°C

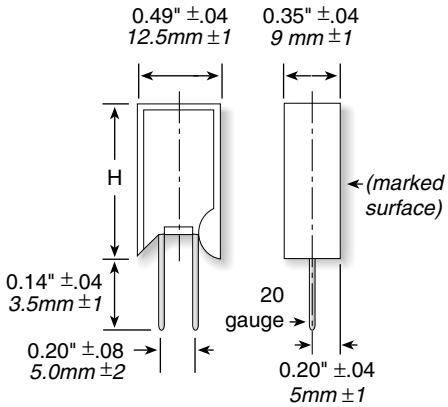

RoHS Compliant

Series	Wattage	Ohms	Height (in./*mm*)	Voltage	Element
TWW3	3	.01-39	0.98 / *25*	250	Wire
TWW5	5	.01-47	0.98 / *25*	350	Wire
TWW10	10	.04-990	1.97 / *50*	750	Wire
TWM3	3	43-50K	0.98 / *25*	250	Metal oxide
TWM5	5	51-50K	0.98 / *25*	350	Metal oxide
TWM10	10	1000-50K	1.97 / *50*	750	Metal oxide

ORDERING INFORMATION

Tolerance
J = 5%
E = RoHS compliant

T W W 3 J R 0 5 E

Series
TWM = Ceramic housed metal oxide radial
TWW = Ceramic housed wirewound radial

Wattage
3
5
10

Resistance Value
Example:
R05 = 0.05Ω
R56 = 0.56Ω
1R0 = 1Ω
8R2 = 8.2Ω
270 = 270Ω
1K0 = 1,000Ω
8K2 = 8,200Ω
10K = 10,000Ω

STANDARD PART NUMBERS FOR TWW SERIES

Ohmic value	Part No. Prefix ➤ Suffix ▼	Wattage 3 TWW3J	Wattage 5 TWW5J	Wattage 10 TWW10J
0.01	R01E	✔	✔	
0.02	R02E	✔	✔	
0.03	R03E	✔	✔	
0.04	R04E	✔	✔	✔
0.05	R05E	✔	✔	✔
0.10	R10E	✔	✔	✔
0.15	R15E	✔	✔	✔
0.20	R20E	✔	✔	✔
0.27	R27E	✔	✔	✔
0.30	R30E	✔	✔	✔
0.33	R33E	✔	✔	✔
0.39	R39E	✔	✔	✔
0.43	R43E	✔	✔	✔
0.47	R47E	✔	✔	✔
0.56	R56E	✔	✔	✔
0.68	R68E	✔	✔	✔
0.75	R75E	✔	✔	✔
0.82	R82E	✔	✔	✔
1.0	1R0E	✔	✔	✔
1.5	1R5E	✔	✔	✔
2.0	2R0E	✔	✔	✔
2.7	2R7E	✔	✔	✔
3.0	3R0E	✔	✔	✔
3.3	3R3E	✔	✔	✔
3.9	3R9E	✔	✔	✔
4.3	4R3E	✔	✔	✔
4.7	4R7E	✔	✔	✔
5.6	5R6E	✔	✔	✔
6.8	6R8E	✔	✔	✔
7.5	7R5E	✔	✔	✔
8.2	8R2E	✔	✔	✔
10	10RE	✔	✔	✔
15	15RE	✔	✔	✔
20	20RE	✔	✔	✔
27	27RE	✔	✔	✔
30	30RE	✔	✔	✔
33	33RE	✔	✔	✔
39	39RE	✔	✔	✔
43	43RE		✔	✔
47	47RE		✔	✔
56	56RE			✔
68	68RE			✔
75	75RE			✔
82	82RE			✔
100	100E			✔
150	150E			✔
200	200E			✔
270	270E			✔
300	300E			✔
330	330E			✔
390	390E			✔
430	430E			✔
470	470E			✔
560	560E			✔
680	680E			✔
750	750E			✔
820	820E			✔

STANDARD PART NUMBERS FOR TWM SERIES

Ohmic value	Part No. Prefix ➤ Suffix ▼	Wattage 3 TWM3J	Wattage 5 TWM5J	Wattage 10 TWM10J
43	43RE	✔		
47	47RE	✔		
56	56RE	✔	✔	
68	68RE	✔	✔	
75	75RE	✔	✔	
82	82RE	✔	✔	
100	100E	✔	✔	
150	150E	✔	✔	
200	200E	✔	✔	
270	270E	✔	✔	
300	300E	✔	✔	
330	330E	✔	✔	
390	390E	✔	✔	
430	430E	✔	✔	
470	470E	✔	✔	
560	560E	✔	✔	
680	680E	✔	✔	
750	750E	✔	✔	
820	820E	✔	✔	
1000	1K0	✔	✔	✔
1500	1K5	✔	✔	✔
2000	2K0	✔	✔	✔
2700	2K7	✔	✔	✔
3000	3K0	✔	✔	✔
3300	3K3	✔	✔	✔
3900	3K9	✔	✔	✔
4300	4K3	✔	✔	✔
4700	4K7	✔	✔	✔
5600	5K6	✔	✔	✔
6800	6K8	✔	✔	✔
7500	7K5	✔	✔	✔
8200	8K2	✔	✔	✔
10000	10K	✔	✔	✔

Check product availability at **www.ohmite.com**

TUM/TUW Series

Ceramic Housed Axial Terminal Power

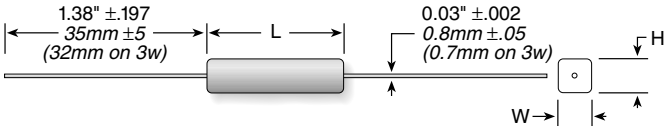

Series	Wattage	Ohms	Dimensions (in. / *mm*) Length (±1mm)	Height (±1mm)	Width (±1mm)	Voltage	Element
TUW3	3	0.01-39	0.87 / *22*	0.31 / *8*	0.31 / *8*	350	Wirewound
TUW5	5	0.01-47	0.87 / 22	0.35 / 9	0.39 / *10*	350	Wirewound
TUW7	7	0.10-680	1.48 / *35*	0.35 / *9*	0.39 / *10*	500	Wirewound
TUW10	10	0.10-990	1.93 / *49*	0.35 / *9*	0.39 / *10*	750	Wirewound
TUW15	15	0.10-1000	1.93 / *49*	.453/11.5	0.49 / *12.5*	1000	Wirewound
TUM3	3	180-33K	0.87 / *22*	0.31 / *8*	0.31 / *8*	350	Metal oxide
TUM5	5	220-50K	0.87 / *22*	0.35 / *9*	0.39 / *10*	350	Metal oxide
TUM7	7	910-50K	1.48 / *35*	0.35 / *9*	0.39 / *10*	500	Metal oxide
TUM10	10	1000-50K	1.93 / *49*	0.35 / *9*	0.39 / *10*	750	Metal oxide
TUM15	15	1100-150K	1.93 / *49*	.453/11.5	0.49 / *12.5*	1000	Metal oxide

The TUM/TUW Series resistors are our most economical power resistors. They are recommended for commercial applications where low cost is critical.

They are available in small standard packs for standard values, or bulk packaged for even lower costs.

FEATURES

- Economical Commercial Grade for general purpose use
- Wirewound and Metal Oxide construction
- Wide resistance range
- Flameproof inorganic construction

DERATING CURVE

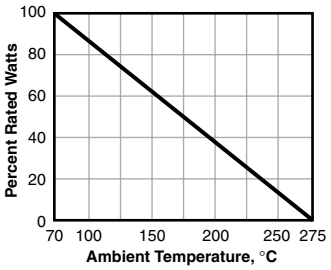

SPECIFICATIONS

Material
Housing: Ceramic
Core: Fiberglass or metal oxide
Filling: Cement based
Electrical
Tolerance: 5% standard
Temperature coeff.:
0.01-20Ω ±400ppm/°C
20-150KΩ ±350ppm/°C
Dielectric withstanding voltage:
1,000VAC
Short time overload
TUW: 10x rated power for 5 sec.
TUM: 5x rated power for 5 sec.

ORDERING INFORMATION

Tolerance J = 5% | **E = RoHS compliant**

T U M 3 J 8 R 2 E

Series
TUM = Ceramic Housed Metal Oxide
TUW = Ceramic Housed Wirewound

Wattage
3
5
7
10
15

Resistance Value
Example:
R50=0.50Ω
1R0=1Ω
8R2=8.2Ω
250=250Ω
1K0=1,000Ω
8K2=8,200Ω
10K=10,000Ω

STANDARD PART NUMBERS FOR TUW/TUM SERIES

Ohmic value	Part No. Prefix ➤ Suffix ▼	Wattage 3 TUW3J	5 TUW5J	7 TUW7J	10 TUW10J	15 TUW15J
0.01	R01E	✔	✔			
0.01	R01E	✔	✔			
0.02	R02E	✔	✔			
0.04	R04E	✔	✔			
0.05	R05E	✔	✔			
0.10	R10E	✔	✔	✔	✔	✔
0.15	R15E	✔	✔	✔	✔	✔
0.20	R20E	✔	✔	✔	✔	✔
0.27	R27E	✔	✔	✔	✔	✔
0.30	R30E	✔	✔	✔	✔	✔
0.33	R33E	✔	✔	✔	✔	✔
0.39	R39E	✔	✔	✔	✔	✔
0.43	R43E	✔	✔	✔	✔	✔
0.47	R47E	✔	✔	✔	✔	✔
0.56	R56E	✔	✔	✔	✔	✔
0.68	R68E	✔	✔	✔	✔	✔
0.75	R75E	✔	✔	✔	✔	✔
0.82	R82E	✔	✔	✔	✔	✔

Ohmic value	Part No. Prefix ➤ Suffix ▼	Wattage 3 TUW3J	5 TUW5J	7 TUW7J	10 TUW10J	15 TUW15J
1.0	1R0E	✔	✔	✔	✔	✔
1.5	1R5E	✔	✔	✔	✔	✔
2.0	2R0E	✔	✔	✔	✔	✔
2.7	2R7E	✔	✔	✔	✔	✔
3.0	3R0E	✔	✔	✔	✔	✔
3.3	3R3E	✔	✔	✔	✔	✔
3.9	3R9E	✔	✔	✔	✔	✔
4.3	4R3E	✔	✔	✔	✔	✔
4.7	4R7E	✔	✔	✔	✔	✔
5.6	5R6E	✔	✔	✔	✔	✔
6.8	6R8E	✔	✔	✔	✔	✔
7.5	7R5E	✔	✔	✔	✔	✔
8.2	8R2E	✔	✔	✔	✔	✔
10	10RE	✔	✔	✔	✔	✔
15	15RE	✔	✔	✔	✔	✔
20	20RE	✔	✔	✔	✔	✔
27	27RE	✔	✔	✔	✔	✔
30	30RE	✔	✔	✔	✔	✔

Ohmic value	Part No. Prefix ➤ Suffix ▼	Wattage 3 TUW3J	5 TUW5J	7 TUW7J	10 TUW10J	15 TUW15J
33	33RE	✔	✔	✔	✔	✔
39	39RE	✔	✔	✔	✔	✔
43	43RE	✔	✔	✔	✔	✔
47	47RE	✔	✔	✔	✔	✔
56	56RE	✔	✔	✔	✔	✔
68	68RE	✔	✔	✔	✔	✔
75	75RE	✔	✔	✔	✔	✔
82	82RE	✔	✔	✔	✔	✔
100	100E	✔	✔	✔	✔	✔
150	150E	✔	✔	✔	✔	✔
200	200E	✔	✔	✔	✔	✔
270	270E	✔	✔	✔	✔	✔
300	300E	✔	✔	✔	✔	✔
330	330E	✔	✔	✔	✔	✔
390	390E	✔	✔	✔	✔	✔
430	430E	✔	✔	✔	✔	✔
470	470E	✔	✔	✔	✔	✔
560	560E	✔	✔	✔	✔	✔

Ohmic value	Part No. Prefix ➤ Suffix ▼	Wattage 3 TUW3J	5 TUW5J	7 TUW7J	10 TUW10J	15 TUW15J
680	680E	✔	✔	✔	✔	✔
750	750E	✔	✔	✔	✔	✔
820	820E	✔	✔	✔	✔	✔
1000	1K0	✔	✔	✔	✔	✔
1500	1K5	✔	✔	✔	✔	✔
2000	2K0	✔	✔	✔	✔	✔
2700	2K7	✔	✔	✔	✔	✔
3000	3K0	✔	✔	✔	✔	✔
3300	3K3	✔	✔	✔	✔	✔
3900	3K9	✔	✔	✔	✔	✔
4300	4K3	✔	✔	✔	✔	✔
4700	4K7	✔	✔	✔	✔	✔
5600	5K6	✔	✔	✔	✔	✔
6800	6K8	✔	✔	✔	✔	✔
7500	7K5	✔	✔	✔	✔	✔
8200	8K2	✔	✔	✔	✔	✔
10000	10K	✔	✔	✔	✔	✔

Check product availability at **www.ohmite.com**

Shaded area: change prefix to TUM

High Energy Wirewound

Axial Terminal / Surface Mount / Heat Sinkable Packaging

RoHS Compliant

STANDARD PART NUMBERS FOR 30 SERIES

Part Number	Ohms	Power	Energy (J)	Fusing Energy (J)	Current to fuse (A)	Power to fuse (W)
33J1R0	1	3	12.70	53.26	23.93	572.60
33J5R0	5	3	6.25	26.20	10.03	502.96
33J10R	10	3	4.94	20.73	7.08	501.70
33J15R	15	3	4.66	19.55	5.95	531.47
33J20R	20	3	3.91	16.40	5.00	500.45
33J25R	25	3	3.07	12.89	4.20	441.79
33J30R	30	3	2.97	12.46	3.92	460.80
33J50R	50	3	2.43	10.20	2.97	440.68
33J100	100	3	1.92	8.07	2.10	439.58
35J1R5	1.5	5	76.55	321.19	40.32	2438.48
35J2R5	2.5	5	64.65	271.23	31.59	2494.75
35J7R5	7.5	5	37.66	158.01	16.90	2141.89
35J12R	12	5	37.90	158.99	14.20	2420.25
35J18R	18	5	28.80	120.84	11.13	2228.50
35J22R	22	5	27.48	115.29	10.03	2213.02
35J36R	36	5	22.78	95.59	7.86	2222.93
35J47R	47	5	23.22	97.42	7.08	2358.00
35J75R	75	5	18.77	78.77	5.55	2309.77
30J2R0	2	10	162.30	680.93	47.98	4603.79
30J4R7	4.7	10	150.86	632.92	33.88	5395.94
30J6R8	6.8	10	137.27	575.91	28.47	5513.41
30J15R	15	10	119.76	502.47	20.11	6065.77
30J27R	27	10	85.27	357.74	14.20	5445.56
30J33R	33	10	65.54	274.98	11.93	4700.40
30J50R	50	10	62.45	262.03	10.03	5029.59
30J82R	82	10	51.90	217.74	7.86	5063.34
30J100	100	10	49.41	207.28	7.08	5017.03
30J150	150	10	46.61	195.54	5.95	5314.71
825J1R0H	1	25	51.04	214.12	40.32	1625.65
825J5R0H	5	25	39.92	167.49	20.11	2021.92
825J10RH	10	25	31.58	132.50	14.20	2016.87
825J25RH	25	25	19.64	82.40	8.43	1776.01
825J36RH	36	25	17.79	74.62	7.08	1806.13
825J47RH	47	25	18.71	78.49	6.60	2049.57
825J75RH	75	25	14.66	61.49	5.00	1876.69
825J100H	100	25	12.29	51.56	4.20	1767.15
825J150H	150	25	11.59	48.64	3.53	1872.00
RH3R0DBR500J	0.5	3	12.93	54.25	31.59	498.95
RH3R0DB1R00J	1	3	10.23	42.91	22.31	497.70
RH3R0DB2R70J	2.7	3	6.87	28.82	13.24	473.33
RH3R0DB4R70J	4.7	3	5.87	24.63	10.03	472.78
RH3R0DB6R80J	6.8	3	5.34	22.41	8.43	483.07
RH3R0DB7R50J	7.5	3	4.75	19.91	7.86	463.11
RH3R0DB10R0J	10	3	3.98	16.70	6.60	436.08
RH3R0DB15R0J	15	3	3.75	15.75	5.55	461.95
RH3R0DB25R0J	25	3	3.07	12.89	4.20	441.79
RH3R0DB47R0J	47	3	2.28	9.59	2.97	414.24
RH3R0DB68R0J	68	3	2.08	8.72	2.49	423.26
RH3R0DB75R0J	75	3	2.29	9.62	2.49	466.83

RoHS compliant product available; Add "E" suffix to part number to specify.

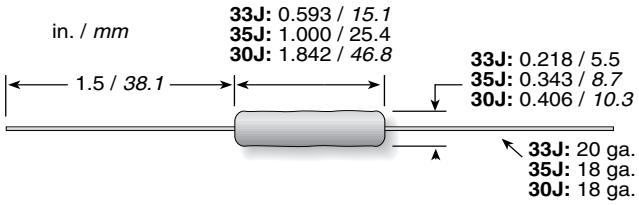

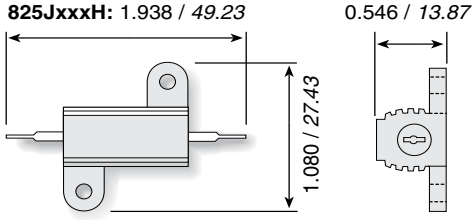

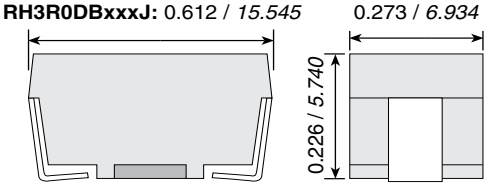

	Type	Watts	Tolerance	Voltage
33Jxxx	Axial	3	5%	200
35Jxxx	Axial	5	5%	460
30Jxxx	Axial	10	5%	1000
825JxxxH	Heat Sinkable	25	5%	520
RH3R0DBxxxJ	Surface Mount	3	5%	200

Ohmite Manufacturing's family of **High Energy Wirewound Resistors** employ special winding techniques to maximize the effective joule rating of each resistor. Most wirewound resistors are wound with the objective of meeting the stated power (wattage) rating and keeping cost low through the use of automatic winding equipment. Typically, manufacturers will allow substitution of resistance wire, depending on material availability. On tight tolerance wirewounds some type of abrasive adjustment to the resistance wire is often used to maximize production yields. Both of these procedures can adversely affect the joule rating and fusing current of a wirewound resistor, and this is often the reason that the manufacturer does not publish a fixed joule rating.

Ohmite **High Energy Wirewounds** are hand wound in order to maintain the tightest possible pitch (space between windings) and thereby maximize the mass of the resistive element. Since no wire substitutions are allowed, and no abrasive adjusting is permitted in this family, Ohmite can publish a fixed joule rating and fusing current for each part number in the series.

This technique can be applied to any wirewound product. In order to provide the broadest selection of packaging, Ohmite has developed standard offerings in three different package types-axial, SMD, and heat sinkable. Other sizes and types can be quoted on request, such as tubular power resistors.

30J, 33J, 35J and 825J Series: Non-inductive versions can also be supplied, along with the calculated joule rating, fusing current, and inductance.

Check product availability using the Worldwide Inventory Search at ohmite.com

(continued)

High Energy Wirewound

Axial Terminal / Surface Mount / Heat Sinkable Packaging
(continued)

PERFORMANCE CHARACTERISICS

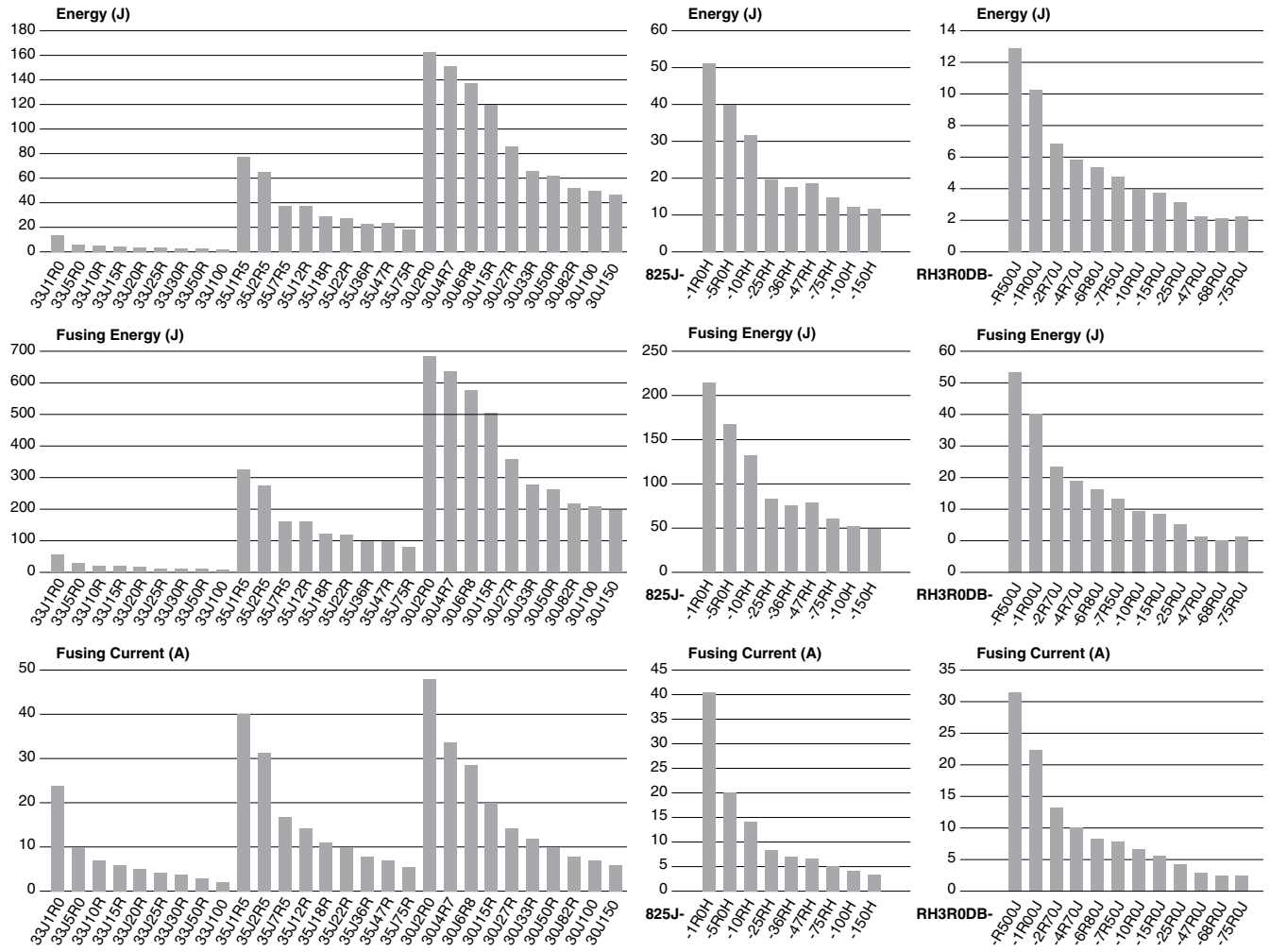

To see the latest in resistor technology click on the "What's New" tab at ohmite.com

PFE and PFR Series

Powr-Rib® Edgewound
Edgewound and Round Wire

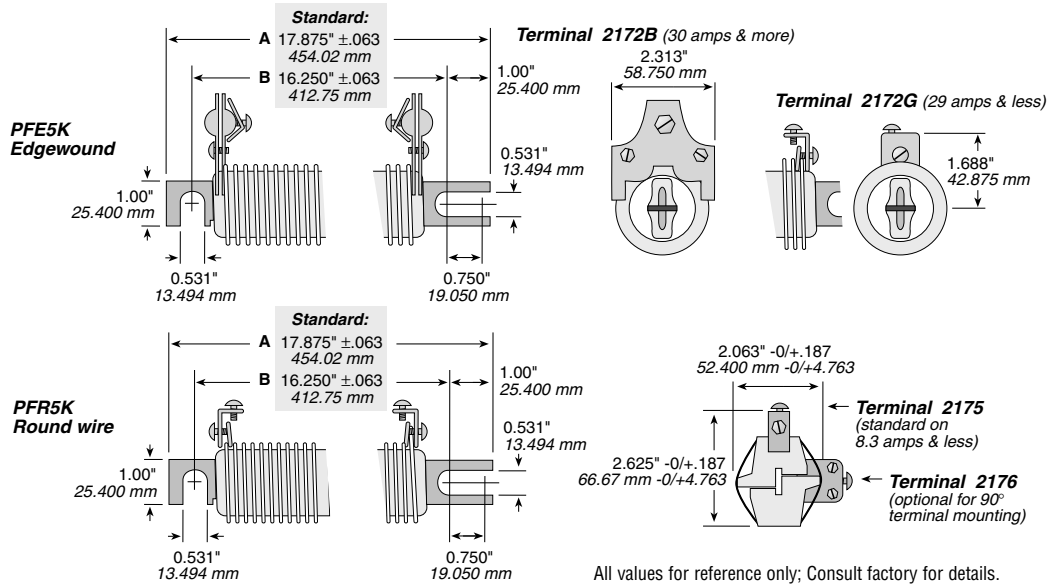

All values for reference only; Consult factory for details.

Designed in both Edgewound and Round Wire formats, these rugged resistors can handle 700 to 1000 Watts of power. Specify our Edgewound design for very low resistance and high power capacity. When higher resistance with lower power capacity is required use our Round Wire design.

These resistors are constructed of a heavy resistance alloy mounted on ceramic insulators and supported by a metal mounting bracket. Metal parts, except for the resistance element, are heavily plated to prevent oxidation at high operating temperatures and to prevent corrosion. The mounting bar is slotted on each end to facilitate installation. Edgewound units provide clamp-type terminals, permitting a reliable connection which can be moved along the resistive element to obtain intermediate values.

ORDERING INFORMATION

RoHS Compliant

P F E 5 K R 1 0 0 E

Style	# of Sections	Tolerance	Ohms
PFE = Edgewound	2 5	K = 10%	R100 = 0.10
PFR = Roundwire	3 6		1R00 = 1.0
	4 7		10R0 = 10
	8		

DERATING

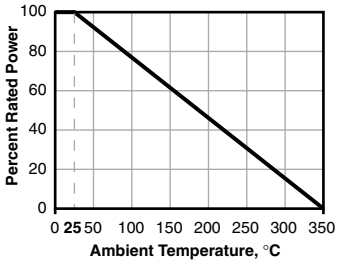

STANDARD PART NUMBERS

EDGEWOUND Ohms		Part #	Watts	Amps
0.1	✔	PFE5KR100E	1000	100
0.12	✤	PFE5KR120E	994	91
0.14	✔	PFE5KR140E	1100	89
0.16	✤	PFE5KR160E	973	78
0.18	✤	PFE5KR180E	1012	75
0.22	✔	PFE5KR220E	1017	68
0.25	✔	PFE5KR250E	992	63
0.3	✤	PFE5KR300E	975	57
0.33	✔	PFE5KR330E	962	54
0.37	✔	PFE5KR370E	925	50
0.5	✔	PFE5KR500E	1105	47
0.6	✔	PFE5KR600E	1109	43
0.67	✔	PFE5KR670E	1126	41
0.75	✔	PFE5KR750E	1141	39
1	✔	PFE5K1R00E	1089	33
1.3	✔	PFE5K1R30E	1093	29
1.6	✔	PFE5K1R60E	1082	26
2.2	✔	PFE5K2R20E	745	18.4
2.8	✔	PFE5K2R80E	744	16.3
3.5	✔	PFE5K3R50E	746	14.6
4.5	✔	PFE5K4R50E	726	12.7
5.4	✔	PFE5K5R40E	752	11.8
6.8	✔	PFE5K6R80E	721	10.3
8.5	✔	PFE5K8R50E	751	9.4

ROUNDWIRE Ohms		Part #	Watts	Amps
11	✔	PFR5K11R0E	757	8.3
13	✔	PFR5K13R0E	750	7.6
17	✔	PFR5K17R0E	740	6.6
20	✔	PFR5K20R0E	696	5.9
25	✔	PFR5K25R0E	650	5.1

✔ = Standard values
✤ = Non-standard values subject to minimum handling charge per item.

Check product availability at
www.ohmite.com

SPECIFICATIONS

Electrical

Current Rating: Continuous duty as listed on following page.

Wattage Rating: 700 to 1,000 (up to 1,600 watts on special order)

Resistance Tolerance: ±10% standard, ±5% available

Terminals: Clamps, movable along resistor wire for setting intermediate resistance values on Edgewound units (current must be derated in proportion).

Temperature Coefficient:
±300 ppm/°C for resistors 50 amps and more
±500 ppm/°C for resistors 47 amps or less

Ohmic Values: See chart on following page.

Mounting: Metal mounting bar is slotted on each end to facilitate installation.

Short Term Overload: 10x rated wattage for five seconds

Ordering Information

See Part Number chart for standard resistance values when ordering.

Powr-Rib® Edgewound
Edgewound and Round Wire
(continued)

PFE EDGEWOUND "POWR-RIB" ELECTRICAL INFORMATION

Size* (No. of Insulator-Sections Long)	2	3	4	STANDARD* 5	6	7	8
Dimension A in.	8.875	11.875	14.875	17.875	20.875	23.875	26.875
Dimension A *mm*	*(225.425)*	*(30.163)*	*(377.825)*	*(454.025)*	*(530.225)*	*(606.425)*	*(682.625)*
Dimension B in.	7.250	10.250	13.250	16.250	19.250	22.250	25.250
Dimension B *mm*	*(184.150)*	*(31.750)*	*(336.550)*	*(412.75)*	*(488.950)*	*(565.150)*	*(641.350)*
Max. Amps	Ohms	Ohms	Ohms	Ohms	Ohms	Ohms	Ohms
100	.033	.057	.080	.100	.120	.140	.160
91	.040	.070	.100	.120	.140	.160	.180
89	.046	.078	.110	.140	.170	.200	.230
78	.052	.088	.120	.160	.190	.220	.250
75	.060	.100	.140	.180	.210	.250	.300
68	.070	.120	.180	.220	.260	.300	.340
63	.080	.130	.190	.250	.300	.350	.400
57	.100	.160	.230	.300	.360	.420	.480
54	.110	.180	.250	.330	.400	.470	.540
50	.120	.200	.280	.370	.450	.530	.610
47	.170	.280	.380	.500	.600	.700	.800
43	.210	.330	.460	.600	.720	.850	.980
41	.230	.360	.510	.670	.800	.930	1.06
39	.260	.420	.580	.750	.900	1.05	1.20
33	.350	.560	.770	1.00	1.20	1.40	1.60
29	.450	.730	1.00	1.30	1.50	1.75	2.00
26	.560	.900	1.20	1.60	1.90	2.20	2.50
18.4	.690	1.20	1.70	2.20	2.70	3.10	3.50
16.3	.880	1.50	2.20	2.80	3.40	4.00	4.60
14.6	1.10	1.90	2.70	3.50	4.30	5.10	5.90
12.7	1.40	2.40	3.50	4.50	5.50	6.50	7.50
11.8	1.70	2.90	4.20	5.40	6.60	7.80	9.00
10.3	2.10	3.70	5.30	6.80	8.30	9.80	11.3
9.4	2.70	4.60	6.50	8.50	10.40	12.3	14.2

PFR ROUND-WIRE "POWR-RIB" ELECTRICAL INFORMATION

8.3	3.4	5.9	8.5	11.0	13.5	16.0	18.5
7.6	4.1	7.1	10.0	13.0	15.9	18.8	21.7
6.6	5.3	9.2	13.0	17.0	20.8	24.6	28.4
5.9	6.3	10.9	15.4	20.0	24.5	29.0	33.5
5.1	7.9	13.6	19.3	25.0	30.7	36.4	42.1

*Standard 5-section units are stocked; part numbers are listed on previous page.

Check product availability using the Worldwide Inventory Search at ohmite.com

14984 Series

High Current Round Edgewound

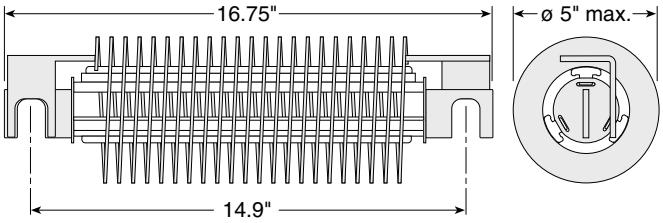

STANDARD PART NUMBERS

Ohmite Part Number	Continuous Amps	Ohms	Watts	Ward Leonard Part Number	Westinghouse Style Number
76021-R118	160	0.118	3021	14984-10-01	1796207
76021-R157	140	0.157	3077	14984-10-03	1796206
76021-R171	130	0.171	2889	14984-10-04	31D2615A05
76021-R285	100	0.285	2850	14984-10-07	31D2614A03

Check product availability at **www.ohmite.com**

These high current round edgewound resistors handle a variety of applications including dynamic braking, load banks, motor starting, and plugging. They are available in a variety of ohm and current ratings common to transit use.

A sturdy welded steel frame supports the refractory insulators. The frame is finished with a zinc chromate conversion for corrosion resistance. The ceramic insulators separate turns of the resistance elements from each other and the frame. The resistance element is a stainless steel strip, used for its corrosion resistance, negligible temperature coefficient, and Ohms per foot vs. current carrying capacity. The resistance element is created by edge-winding a stainless strip into a continuous coil of the proper length. Zinc plated terminals welded to the resistance element complete the assembly.

Contact us with your specific needs.

SPECIFICATIONS

Electrical

Current Rating: Continuous current ratings are based on a maximum temperature rise of 375°C as specified by NEMA Industrial Control Standards for bare element resistors.

Wattage Rating: Can be found from I^2R.

Resistance Tolerance: ±10%

Special Engineering Services: Available for ohmic values other than those listed, mountings, other terminal styles, all stainless frame and terminal construction.

Ordering Information

Order using the Ward Leonard part number from the table.

To see the latest in resistor technology click on the "What's New" tab at ohmite.com

Little Demon®

Carbon Composition Molded
OD/OF Series (5% Tol.) OA Series (10%)

Ohmite's Little Demons are small, reliable carbon composition resistors with exceptional strength. They are made tough by a molding process that combines the terminals, insulation and resistive element into an integrated unit. Along with their small size, Little Demons perform with low noise, dissipate heat rapidly and offer high temperature stability.

Color codes are readable even after prolonged use thanks to a very durable coating that resists abrasions and chipping normally associated with automatic insertion equipment.

FEATURES

- Molded insulation for high dielectric strength.
- Rugged construction.
- High surge capabilities.
- Comparable to "Mil" RC07, RC20, and RC32 types.

SPECIFICATIONS

Material

Terminals: Solder-coated copper terminal.

Body: Molded Phenolic

Electrical

Tolerance: ±5% (OD/OF); ±10% (OA)

Derating: Linearly from 100% @ +70°C to 0% @ 130°C

ORDERING INFO

RoHS compliant — Tape & reel *optional*

O D 6 8 3 J E -TR

Series	Ohms	Tolerance
OD 68G = 6.8		OD, OF: J = 5%
OF 680 = 68		OA: K = 10%
OA 681 = 680		
682 = 6,800		
683 = 68,000		
684 = 680,000		

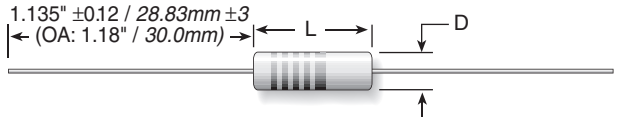

Series	Wattage	Ohms	Tol.	Dimensions (in. / *mm*) Length	Max Diam.	Max. Voltage	Dielectric VAC	Lead Dia.
OD	0.25	2.2-5.6M	±5%	0.276 / *7.0*	0.098 / *2.5*	250	500	0.024/0.*60*
OF	0.50	2.2-20M	±5%	0.406 /*10.3*	0.150 / *3.8*	350	700	0.028/0.*70*
OA	1.00	2.2-1M	±10%	0.591 /*15.0*	0.236 / *6.0*	500	1000	0.035/0.*92*

PACKAGING

For complete Little Demon tape and reel dimensions, see: **http://www.ohmite.com/info/little-demon**

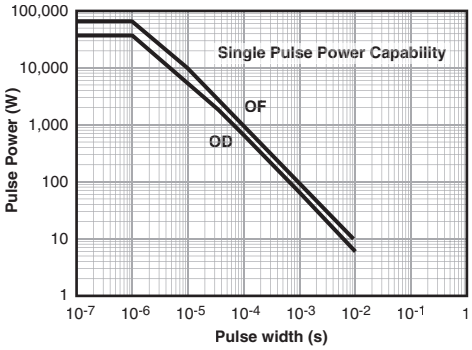

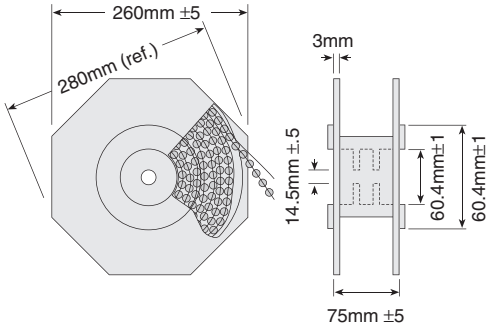

Tape/Reel	OD	OF
Qty./reel	5000	3000
Reel size (mm)	260	260
Qty./carton	40,000	24,000
Gross carton wt. (kg)	12	13
Carton size (m^3)	0.04	0.04

Ammo Box	OD	OF
Tape width (mm)	52	52
Qty./box	2000	2000
Qty./carton	30,000	30,000
Gross carton wt. (kg)	10	16
Carton size (m^3)	0.03	0.05

STANDARD PART NUMBERS FOR LITTLE DEMON SERIES

Ohmic value	Part No. Prefix ➤ Suffix ▼	Wattage OD– 0.25	OF– 0.5	OA– * 1.0
2.2	22GJE	✔	✔	✔
2.4	24GJE	✔	✔	
2.7	27GJE	✔	✔	✔
3	30GJE	✔	✔	
3.3	33GJE	✔	✔	✔
3.6	36GJE	✔	✔	
3.9	39GJE	✔	✔	✔
4.3	43GJE	✔	✔	
4.7	47GJE	✔	✔	✔
5.1	51GJE	✔	✔	
5.6	56GJE	✔	✔	✔
6.2	62GJE	✔	✔	
6.8	68GJE	✔	✔	✔
7.5	75GJE	✔	✔	
8.2	82GJE	✔	✔	✔
9.1	91GJE	✔	✔	
10	100JE	✔	✔	✔
11	110JE	✔	✔	
12	120JE	✔	✔	✔
13	130JE	✔	✔	
15	150JE	✔	✔	✔
16	160JE	✔	✔	
18	180JE	✔	✔	✔
20	200JE	✔	✔	
22	220JE	✔	✔	✔
24	240JE	✔	✔	
27	270JE	✔	✔	✔
30	300JE	✔	✔	

Ohmic value	Part No. Prefix ➤ Suffix ▼	Wattage OD– 0.25	OF– 0.5	OA– * 1.0
33	330JE	✔	✔	✔
36	360JE	✔	✔	
39	390JE	✔	✔	✔
43	430JE	✔	✔	
47	470JE	✔	✔	✔
51	510JE	✔	✔	
56	560JE	✔	✔	✔
62	620JE	✔	✔	
68	680JE	✔	✔	✔
75	750JE	✔	✔	
82	820JE	✔	✔	✔
91	910JE	✔	✔	
100	101JE	✔	✔	✔
110	111JE	✔	✔	
120	121JE	✔	✔	✔
130	131JE	✔	✔	
150	151JE	✔	✔	✔
160	161JE	✔	✔	
180	181JE	✔	✔	✔
200	201JE	✔	✔	
220	221JE	✔	✔	✔
240	241JE	✔	✔	
270	271JE	✔	✔	✔
300	301JE	✔	✔	
330	331JE	✔	✔	✔
360	361JE	✔	✔	
390	391JE	✔	✔	✔
430	431JE	✔	✔	

Ohmic value	Part No. Prefix ➤ Suffix ▼	Wattage OD– 0.25	OF– 0.5	OA– * 1.0
470	471JE	✔	✔	✔
510	511JE	✔	✔	
560	561JE	✔	✔	✔
620	621JE	✔	✔	
680	681JE	✔	✔	✔
750	751JE	✔	✔	
820	821JE	✔	✔	✔
910	911JE	✔	✔	
1000	102JE	✔	✔	✔
1100	112JE	✔	✔	
1200	122JE	✔	✔	✔
1300	132JE	✔	✔	
1500	152JE	✔	✔	✔
1600	162JE	✔	✔	
1800	182JE	✔	✔	✔
2000	202JE	✔	✔	
2200	222JE	✔	✔	✔
2400	242JE	✔	✔	
2700	272JE	✔	✔	✔
3000	302JE	✔	✔	
3300	332JE	✔	✔	✔
3600	362JE	✔	✔	
3900	392JE	✔	✔	✔
4300	432JE	✔	✔	
4700	472JE	✔	✔	✔
5100	512JE	✔	✔	
5600	562JE	✔	✔	✔
6200	622JE	✔	✔	

Ohmic value	Part No. Prefix ➤ Suffix ▼	Wattage OD– 0.25	OF– 0.5	OA– * 1.0
6800	682JE	✔	✔	✔
7500	752JE	✔	✔	
8200	822JE	✔	✔	✔
9100	912JE	✔	✔	
10,000	103JE	✔	✔	✔
11,000	113JE	✔	✔	
12,000	123JE	✔	✔	✔
13,000	133JE	✔	✔	
15,000	153JE	✔	✔	✔
16,000	163JE	✔	✔	
18,000	183JE	✔	✔	✔
20,000	203JE	✔	✔	
22,000	223JE	✔	✔	✔
24,000	243JE	✔	✔	
27,000	273JE	✔	✔	✔
30,000	303JE	✔	✔	
33,000	333JE	✔	✔	✔
36,000	363JE	✔	✔	
39,000	393JE	✔	✔	✔
43,000	433JE	✔	✔	
47,000	473JE	✔	✔	✔
51,000	513JE	✔	✔	
56,000	563JE	✔	✔	✔
62,000	623JE	✔	✔	
68,000	683JE	✔	✔	✔
75,000	753JE	✔	✔	
82,000	823JE	✔	✔	✔
91,000	913JE	✔	✔	

Ohmic value	Part No. Prefix ➤ Suffix ▼	Wattage OD– 0.25	OF– 0.5	OA– * 1.0
100,000	104JE	✔	✔	✔
110,000	114JE	✔	✔	
120,000	124JE	✔	✔	✔
130,000	134JE	✔	✔	
150,000	154JE	✔	✔	✔
160,000	164JE	✔	✔	
180,000	184JE	✔	✔	✔
200,000	204JE	✔	✔	
220,000	224JE	✔	✔	✔
240,000	244JE	✔	✔	
270,000	274JE	✔	✔	✔
300,000	304JE	✔	✔	
330,000	334JE	✔	✔	✔
360,000	364JE	✔	✔	
390,000	394JE	✔	✔	✔
430,000	434JE	✔	✔	
470,000	474JE	✔	✔	✔
510,000	514JE	✔	✔	
560,000	564JE	✔	✔	✔
620,000	624JE	✔	✔	
680,000	684JE	✔	✔	✔
750,000	754JE	✔	✔	
820,000	824JE	✔	✔	✔
910,000	914JE	✔	✔	
1M	105JE			✔
1.1M	115JE	✔	✔	
1.2M	125JE	✔	✔	
1.3M	135JE	✔	✔	

Ohmic value	Part No. Prefix ➤ Suffix ▼	Wattage OD– 0.25	OF– 0.5
1.5M	155JE	✔	✔
1.6M	165JE	✔	✔
1.8M	185JE	✔	✔
2.0M	205JE	✔	✔
2.2M	225JE	✔	✔
2.4M	245JE	✔	✔
2.7M	275JE	✔	✔
3.0M	305JE	✔	✔
3.3M	335JE	✔	✔
3.6M	365JE	✔	✔
3.9M	395JE	✔	✔
4.3M	435JE	✔	✔
4.7M	475JE	✔	✔
5.1M	515JE	✔	✔
5.6M	565JE	✔	✔
6.2M	625JE		✔
6.8M	685JE		✔
7.5M	755JE		✔
8.2M	825JE		✔
9.1M	915JE		✔
10M	106JE		✔
11M	116JE		✔
12M	126JE		✔
13M	136JE		✔
15M	156JE		✔
16M	166JE		✔
18M	186JE		✔
20M	206JE		✔

* Shaded area: Change "J" in Suffix to "K"

OX/OY Series

Ceramic Composition
10% Tolerance

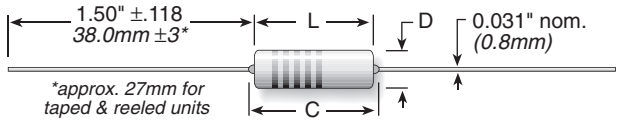

FEATURES

- Replaces 1 and 2 watt carbon composition resistors
- Meets high energy density demands
- High peak power
- 10% Tolerance

SPECIFICATIONS

Material
Terminals: Pb-free solder-coated axial
Coating: Silicone ceramic
Derating: Linear from 100% @ +70°C to 0% @ +200°C
Operating Temp. Range: -40°C to +220°C
Electrical
Tolerance: ±10% standard
Power Rating: Based on 70°C free air rating.
Temperature Coefficient: -1300 ±300ppm/°C.

Series	Watts max.*	Resistance min.	Resistance max.	Dimensions (in. / *mm*) Length L ±.039 *(±1.0)*	Length C max.	Diameter D ±.039 *(±1.0)*	Joules max.**	Max Working volts	Qty. per reel
OX	1	3.3	100K	0.65 / *16.5*	0.748 / *19.0*	0.217 / *5.5*	50	300	1000
OY	2	3.3	1M	0.748 / *19.0*	0.886 / *22.5*	0.276 / *7.0*	80	400	500

* at 70°C. **For a single impulse.

The OX/OY Series of fixed ceramic resistors are ideal for circuitry associated with surges, high peak power or high energy. They offer enhanced performance in high voltage power supplies, R-C snubber circuits, and inrush limiters. The OX/OY resistors can often replace carbon composition resistors which can be difficult to source.

PERFORMANCE CHARACTERISTICS

Test	OX	OY
Max Working Voltage	300V	400V
Dielectric Strength	500V	700V
Max Overload Voltage	600V	800V
Max Pulse Voltage[1]	14KV	20KV
Pulse Tolerance, 100 pulses	1240V @ 52µF, 40J/ 35 sec.	1640V @ 52µF, 70J/35 sec.

Test	Condition	Maximum ΔR
Life Test	MIL-STD-202, Method 108	±5%
Short Time Overload	2x rated V, 5 sec ON @ 70°C	±(2% + 0.05ohm)
Resistance to Pulse[1] 20,000 cycles	see circuit for test conditions	±5%
Thermal Shock	MIL-STD-202, Method 107	±(2% ± 0.05 ohm)
Moisture Resistance	1000 hrs @ 40°C, 90 - 95% RH	±5%

[1]See figures, left

RESISTANCE TO PULSE

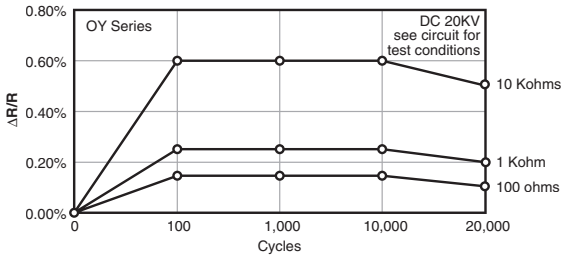

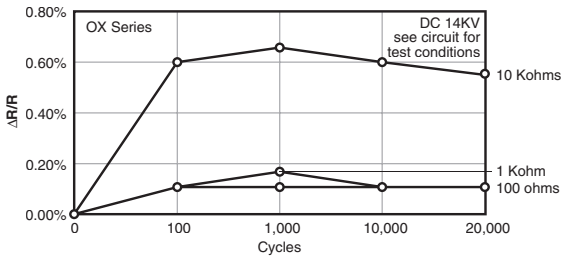

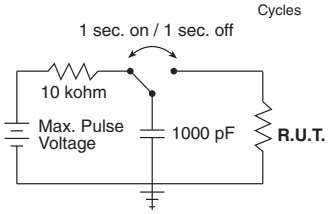

14KV and 20KV values used in circuit as shown; full voltage not applied directly to resistor.

TAPE DIMENSIONS

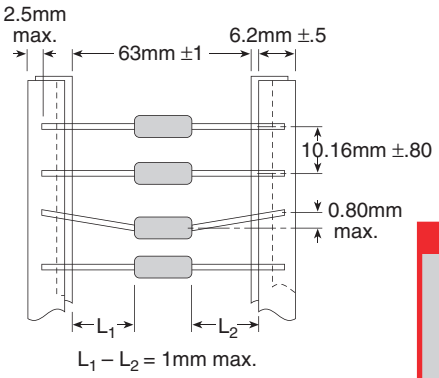

REEL DIMENSIONS

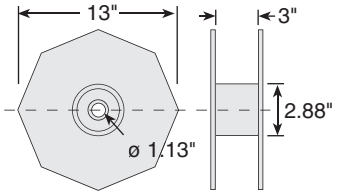

ORDERING INFORMATION

RoHS Compliant — Tape & reel *optional*

O X 8 2 G K E -TR

Size
OX = 1W
OY = 2W

Ohm Value
Example:
33G = 3.3 Ohms
330 = 33 Ohms
331 = 330 Ohms

Tolerance
K= 10% Standard

STANDARD PART NUMBERS FOR OX/OY SERIES

Ohmic value	Part No. Prefix ➤ Suffix ▼	Wattage 1 OX	Wattage 2 OY	Ohmic value	Part No. Prefix ➤ Suffix ▼	Wattage 1 OX	Wattage 2 OY	Ohmic value	Part No. Prefix ➤ Suffix ▼	Wattage 1 OX	Wattage 2 OY	Ohmic value	Part No. Prefix ➤ Suffix ▼	Wattage 1 OX	Wattage 2 OY	Ohmic value	Part No. Prefix ➤ Suffix ▼	Wattage 1 OX	Wattage 2 OY
3.3	—33GKE	✔	✔	27	—270KE	✔	✔	220	—221KE	✔	✔	1800	—182KE	✔	✔	15000	—153KE	✔	✔
3.9	—39GKE	✔	✔	33	—330KE	✔	✔	270	—271KE	✔	✔	2200	—222KE	✔	✔	18000	—183KE	✔	✔
4.7	—47GKE	✔	✔	39	—390KE	✔	✔	330	—331KE	✔	✔	2700	—272KE	✔	✔	22000	—223KE	✔	✔
5.6	—56GKE	✔	✔	47	—470KE	✔	✔	390	—391KE	✔	✔	3300	—332KE	✔	✔	27000	—273KE	✔	✔
6.8	—68GKE	✔	✔	56	—560KE	✔	✔	470	—471KE	✔	✔	3900	—392KE	✔	✔	33000	—333KE	✔	✔
8.2	—82GKE	✔	✔	68	—680KE	✔	✔	560	—561KE	✔	✔	4700	—472KE	✔	✔	39000	—393KE	✔	✔
10	—100KE	✔	✔	82	—820KE	✔	✔	680	—681KE	✔	✔	5600	—562KE	✔	✔	47000	—473KE	✔	✔
12	—120KE	✔	✔	100	—101KE	✔	✔	820	—821KE	✔	✔	6800	—682KE	✔	✔	56000	—563KE	✔	✔
15	—150KE	✔	✔	120	—121KE	✔	✔	1000	—102KE	✔	✔	8200	—822KE	✔	✔	68000	—683KE	✔	✔
18	—180KE	✔	✔	150	—151KE	✔	✔	1200	—122KE	✔	✔	10000	—103KE	✔	✔	82000	—823KE	✔	✔
22	—220KE	✔	✔	180	—181KE	✔	✔	1500	—152KE	✔	✔	12000	—123KE	✔	✔	100000	—104KE	✔	✔
																120000	—124KE		✔
																150000	—154KE		✔
																180000	—184KE		✔
																220000	—224KE		✔
																270000	—274KE		✔
																330000	—334KE		✔
																390000	—394KE		✔
																470000	—474KE		✔
																560000	—564KE		✔
																680000	—684KE		✔
																820000	—824KE		✔
																1 MEG	—105KE		✔

1-866-9-OHMITE • Int'l 1-847-258-0300 • Fax 1-847-574-7522 • www.ohmite.com • info@ohmite.com

A Series

PulsEater® Ceramic Composition Available in E12 Ohmic values

The "A" Series non-inductive, ceramic composite resistors are designed for a variety of applications where high energy handling capabilities are crucial. These resistors are ideal for any application which is subject to surges, high peak power, or impulse energy.

Their unique design allows uniform distribution of energy throughout their structure which results in low thermal stress. The high-temperature, solvent-resistant epoxy coating carries a UL94V0 flammability rating which is suitable for almost any environment.

APPLICATIONS

- Motor Drives
- Power Supplies, UPS
- Power Conversion
- In-Rush Current Limiting

FEATURES

- High Surge Energy
- Non-Inductive
- Small Size

SPECIFICATIONS

Material

Resistance Element: Bulk Ceramic

Terminals: Radial; 100% Sn solder coated radial (60/40 solder available upon request)

Coating: UL94V0, solvent resistant epoxy

Electrical

Tolerance: ±10% Standard

Operating Temp. Range: -55°C to 150°C

Derating: Derates linearly from 100% @ 50°C to 0% @ 150°C

Temperature Rise: 100°C @ 100% rated power, 50°C ambient

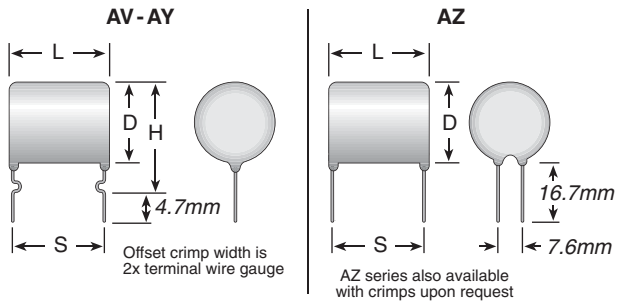

*AZ style is provided with dual terminal wires

ORDERING INFORMATION

RoHS compliant

A W 5 6 G K E

Size — **Ohm Value** — **Tolerance**

Example:
33G = 3.3 Ohms
330 = 33 Ohms
331 = 330 Ohms

K= 10% std.

Series	Resistance[1] (ohms)	P avg.[2] (watts)	L max. (mm)	D max. (mm)	H max. (mm)	S norm. (mm)	Impulse Voltage[3] (volts)	Energy[4] (joule)	Term. wire gauge (AWG)	Weight (g)
AV xxx	3.3 to 10K	2.0	15	13	22	12.5	1000	250	20	3.9
AW xxx	4.7 to 15K	2.5	20	13	19	17.5	1500	400	20	5.4
AX xxx	1.0 to 3.3K	3.5	15	21	26	12.5	1000	700	18	10
AY xxx	2.2 to 6.8K	4.5	25	21	26	22.5	2000	1400	18	19
AZ xxx	1.5 to 4.7K	5.5	30	26		27	2500	2800	18	33

[1]E12 Standard Values ±10%; [2]Free Air 40°C Ambient; [3]In Air; [4]Single Impulse

MOUNTING CLIP

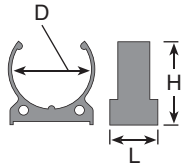

Part No.	Dim. (mm) D	H	L	for Series	Color
5911E	20	23	13	AX and AY	White
5910E	25	26	15	AZ	Black

This saddle clip conforms to the configuration of Ohmite's A Series resistor to provide secure mounting. Made of a durable thermoplastic polyester, the saddle clip is designed to secure the A Series in place while safely withstanding its operating temperatures. Use (2) saddle clips per resistor for extra stability.

STANDARD SPECIFICATIONS

Parameter	Max. ΔR	Test Method
Life Test	+5%	MIL-STD-202F, method 108A. except 50°C, 1000 hrs. @ rated power; 1.5 hrs. ON, 0.5 hrs. OFF
Single Pulse Energy	±1.5%	Single pulse, capacitor discharge at Rated Energy; 350VDC for **AW** and **AX** sizes; 650VDC for **AY** and **AZ** sizes.
Repetitive HV Pulsing	±2.0%	10 joules @ 5.0KV, 10,000 cycles
Short-time Overload	±1.5%	10x rated power. 5 sec. ON, 5 sec. OFF, 5 cycles
Short-term High Temp	±1.5%	250°C for 30 seconds
Long-term High Temp	±2.0%	1000 hours @ 150°C
Thermal Shock Cycle	±2.0%	MIL-STD-202F, method 107D. -55°C to +125°C, 5 cycles
Moisture Resistance	±1.0%	90% to 95% rh @ 40°C, 1000 hrs.

STANDARD VALUES FOR A SERIES

Ohmic value	Part No. Prefix ➤ Suffix ▼	AV	AW	AX	AY	AZ
1.0	10GK			✔		
1.2	12GK					
1.5	15GK					✔
1.8	18GK					
2.2	22GK			✔	✔	✔
2.7	27GK				✔	
3.3	33GK	✔		✔	✔	✔
3.9	39GK			✔	✔	✔
4.7	47GK	✔	✔		✔	
5.6	56GK		✔		✔	
6.8	68GK		✔		✔	
8.2	82GK		✔		✔	
10	100K	✔	✔	✔	✔	✔
12	120K					
15	150K	✔	✔		✔	
18	180K					
22	220K	✔	✔	✔	✔	✔
27	270K		✔		✔	
33	330K		✔	✔	✔	✔
39	390K	✔	✔	✔	✔	✔
47	470K	✔	✔		✔	
56	560K		✔		✔	
68	680K		✔		✔	✔
82	820K		✔		✔	
100	101K	✔	✔	✔	✔	✔
120	121K					
150	151K	✔	✔		✔	
180	181K					
220	221K	✔	✔	✔	✔	✔
270	271K		✔		✔	
330	331K		✔	✔	✔	✔
470	471K	✔	✔		✔	
560	561K		✔		✔	
680	681K		✔		✔	
820	821K		✔		✔	
1000	102K	✔	✔	✔	✔	✔

Check product availability at **www.ohmite.com**

✔ = Standard values Non-standard values subject to a minimum handling charge per item.

TA Series

Power Chip®
Thick Film on Alumina Substrate

RoHS Compliant

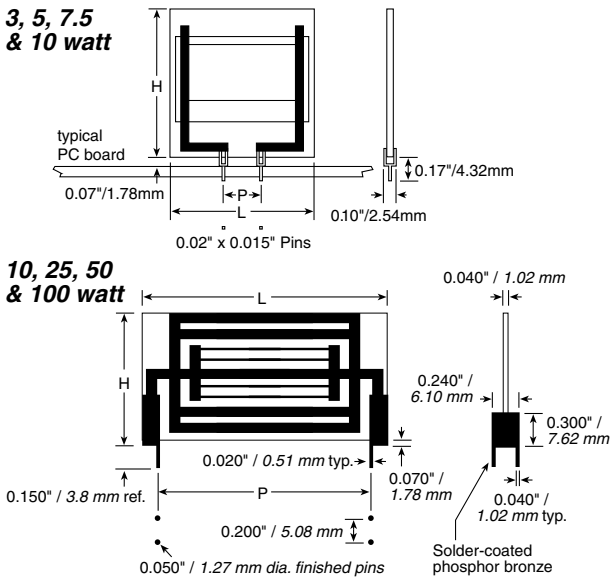

Ohmite's original Power Chip resistors feature our thick film on alumina substrate technology. These planar packages yield space saving, 10W/in^2 power densities that require over 50% less board space than other radial packages. Convection cooling is maximized by the planar package configuration which dissipates heat well above board level.

Ohmite's power chip resistors have a 125% higher operating temperature range than competitive product of similar design. High temperature solder and in-process plating keep terminations secure under self-heating effects by preventing re-flow from full power operation.

Flexible packaging schemes make these resistors ideal for power supplies, audio amplifiers, video fly-back, and other power control applications.

FEATURES

- High-Temp Terminal Construction
- Wide Resistance Range
- Low Inductance (50nH-100nH)
- High Power Density
- Easy to install. PC-mountable

SPECIFICATIONS

Material
Substrate: Alumina
Resistor: Thick Film
Coating: Glass
Terminals: Solder Plated Phosphor Bronze
Thermal Conductivity: 20 Watts/Meter/°C
Temperature Coefficient:

1 ohm	450 ppm/°C
1 to 100Ω	100 ppm/°C
101Ω and up	50 ppm/°C

Electrical
Tolerance: ±1%, ±5% and ±10%
Power Rating: Based on 25°C free air
Resistance Range: 0.25 ohm to 10M ohm. Consult factory for other values
Maximum Operating Voltage: 350 VAC, 500 VDC through glass, 1000 VAC, 1500 VDC through substrate
Overload: Five times rated power, as long as the one second average dissipation does not exceed the wattage rating. ΔR: ±2%, 2000 hours
Derating: 100% @ 25°C to 0% @ 180°C ambient.

Series	Wattage	Dimensions (±.020 in. / ±.508mm) P	Length L	Height H
TA203	3.0	0.200 / *5.08*	0.50 / *12.70*	0.60 / *15.24*
TA303	3.0	0.300 / *7.62*	0.50 / *12.70*	0.60 / *15.24*
TA205	5.0	0.200 / *5.08*	0.50 / *12.70*	1.00 / *25.40*
TA305	5.0	0.300 / *7.62*	0.50 / *12.70*	1.00 / *25.40*
TA605	5.0	0.600 / *15.24*	1.00 / *25.40*	0.50 / *12.70*
TA805	5.0	0.800 / *20.32*	1.00 / *25.40*	0.50 / *12.70*
TA207	7.5	0.200 / *5.08*	0.75 / *19.05*	1.00 / *25.40*
TA307	7.5	0.300 / *7.62*	0.75 / *19.05*	1.00 / *25.40*
TA310	10.0	0.300 / *7.62*	1.00 / *25.40*	1.00 / *25.40*
TA810	10.0	0.800 / *20.32*	1.00 / *25.40*	1.00 / *25.40*
TA025	25.0	1.90 / *48.3*	2.220 / *56.39*	1.170 / *29.70*
TA050	50.0	1.90 / *48.3*	2.220 / *56.39*	2.270 / *57.60*
TA100	100.0	4.10 / *104.1*	4.420 / *112.27*	2.270 / *57.60*

ORDERING INFORMATION

Pin spacing *(on 3-10W models only)*: 2 = .2", 3 = .3", 8 = .8"
Tolerance: K = 10%, J = 5%, F = 1%
RoHS compliant

TA 3 05 PA 4K50 J E

Series
Power Rating: 03 = 3 W, 05 = 5, 07 = 7.5, 10 = 10, 025 = 25, 050 = 50, 100 = 100
Package: PA = pin terminals, std. for 3-10 W; PW = wraparound, std. for 10-100 W
Resistance Value (Ω): R250 = 0.25, 10R0 = 10.0, 2K00 = 2,000, 45K0 = 45,000

Check product availability at **www.ohmite.com**

STANDARD PART NUMBERS FOR TA SERIES

Ohmic value	Part No. (Prefix ➤ / Suffix ▼)	TA203PA	TA303PA	TA205PA	TA305PA	TA207PA	TA310PA	TA810PW	TA025PW	TA050PW	TA100PW
0.25	R250J	✚	✔	✔	✔						
1.00	1R00J	✚	✚	✚	✔	✔	✚	✚	✚	✚	✚
1.50	1R50J	✔	✔	✔	✔	✔	✚	✔	✔	✔	✔
2.00	2R00J	✚	✔	✚	✔	✔	✚	✔	✔	✔	✔
4.70	4R70J	✔	✔	✚	✚	✔	✔	✔	✔	✔	✔
5.00	5R00J	✚	✔	✔	✔	✔	✔	✚	✚	✚	✚
5.10	5R10J	✔	✔	✔	✔	✚	✔	✔	✔	✔	✔
7.50	7R50J	✔	✔	✔	✔	✔	✚	✔	✔	✔	✔
8.20	8R20J	✔	✔	✔	✚	✔	✔	✔	✔	✔	✔
10.00	10R0J	✚	✚	✚	✚	✚	✚	✚	✚	✚	✚
11.00	11R0J	✔	✔	✚	✔	✔	✔	✔	✔	✔	✔
12.00	12R0J	✚	✔	✔	✔	✔	✔	✔	✔	✔	✔
15.00	15R0J	✚	✔	✔	✚	✔	✔	✔	✔	✔	✔
20.00	20R0J	✚	✔	✚	✚	✚	✚	✔	✔	✔	✔
24.00	24R0J	✔	✔	✔	✚	✔	✔	✔	✔	✔	✔
27.00	27R0J	✚	✔	✔	✔	✔	✚	✔	✔	✔	✔
33.00	33R0J	✔	✔	✔	✔	✚	✔	✔	✔	✔	✔
47.00	47R0J	✚	✔	✚	✔	✔	✔	✔	✔	✔	✔

Ohmic value	Part No. (Prefix ➤ / Suffix ▼)	TA203PA	TA303PA	TA205PA	TA305PA	TA207PA	TA310PA	TA810PW	TA025PW	TA050PW	TA100PW
50.00	50R0J	✚	✚	✚	✚	✔	✔	✚	✚	✚	✚
62.00	62R0J	✔	✔	✔	✚	✔	✔	✔	✔	✔	✔
68.00	68R0J	✔	✔	✚	✔	✔	✚	✔	✔	✔	✔
75.00	75R0J	✔	✔	✔	✚	✔	✔	✔	✔	✔	✔
100.00	100RJ	✚	✔	✚	✚	✔	✚	✚	✚	✚	✚
150.00	150RJ	✔	✔	✚	✔	✔	✔	✔	✔	✔	✔
200.00	200RJ	✚	✚	✚	✚	✚	✔	✔	✔	✔	✔
250.00	250RJ	✔	✔	✔	✚	✔	✔	✔	✔	✔	✔
270.00	270RJ	✔	✔	✚	✔	✔	✚	✔	✔	✔	✔
300.00	300RJ	✚	✔	✚	✔	✔	✔	✔	✔	✔	✔
470.00	470RJ	✚	✔	✚	✔	✚	✚	✔	✔	✔	✔
500.00	560	✚	✔	✚	✔	✔	✔	✚	✚	✚	✚
620.00	620RJ	✔	✔	✔	✚	✔	✔	✔	✔	✔	✔
680.00	680RJ	✔	✔	✚	✔	✔	✔	✔	✔	✔	✔
1,000.00	1K00J	✚	✔	✚	✔	✔	✚	✚	✚	✚	✚
1,500.00	1K50J	✔	✔	✚	✚	✔	✚	✔	✔	✔	✔
1,800.00	1K80J	✔	✔	✚	✔	✔	✔	✔	✔	✔	✔
2,000.00	2K00J	✚	✔	✔	✚	✔	✔	✔	✔	✔	✔

Ohmic value	Part No. (Prefix ➤ / Suffix ▼)	TA203PA	TA303PA	TA205PA	TA305PA	TA207PA	TA310PA	TA810PW	TA025PW	TA050PW	TA100PW
2,500.00	2K50J	✔	✔	✚	✔	✔	✔	✔	✔	✔	✔
3,000.00	3K00J	✔	✔	✚	✔	✔	✚	✔	✔	✔	✔
4,000.00	4K00J	✔	✔	✔	✚	✔	✔	✔	✔	✔	✔
4,700.00	4K70J	✔	✔	✚	✚	✚	✔	✔	✔	✔	✔
5,000.00	5K00J	✔	✔	✔	✚	✔	✔	✔	✔	✔	✔
5,100.00	5K10J	✔	✔	✚	✔	✔	✚	✔	✔	✔	✔
7,500.00	7K50J	✔	✔	✚	✔	✔	✚	✔	✔	✔	✔
10,000.00	10K0J	✚	✔	✚	✚	✚	✚	✚	✚	✔	✔
15,000.00	15K0J	✔	✔	✔	✚	✔	✔	✔	✔	✔	✔
18,000.00	18K0J	✔	✚	✔	✚	✔	✔	✔	✔	✔	✔
20,000.00	20K0J	✔	✔	✚	✔	✚	✚	✔	✔	✔	✔
30,000.00	30K0J	✔	✔	✚	✔	✔	✔	✔	✔	✔	✔
39,000.00	39K0J	✔	✔	✔	✚	✔	✔	✔	✔	✔	✔
50,000.00	50K0J	✔	✔	✔	✚	✔	✔	✔	✔	✔	✔
75,000.00	–75K0J	✔	✔	✚	✔	✔	✔	✔	✔	✔	✔
100,000	100KJ	✚	✚	✚	✔	✔	✔	✔	✔	✔	✔
150,000	150KJ	✚	✔	✔	✔	✔	✔	✔	✔	✔	✔
200,000	200KJ	✔	✚	✔	✔	✔	✔	✔	✔	✔	✔

✚ = Most popular standard values, ✔ = Stock values, ✜ = Non-standard values subject to minimum handling charge per item

TAH Series

20 Watt TO220 Package Thick Film Power

The TAH20 is a completely encapsulated thick film resistor in the TO220 package outline. Rated for 20 watts @ 25°C case temperature, these resistors are electrically isolated, and molded in a high temperature case.

Designed for heat sink mounting, the symmetrical package is ready for use with snap-on style heat sinks (we recommend use of thermal grease). The TAH20 Series is very low induction, and available in a wide range of resistance values in standard 5% tolerance. 1% tolerance available by special order.

FEATURES

- 20 Watt Power Rating at 25°C Case Temperature
- High Pulse Tolerant Design
- Quick-snap Molded Package
- Very Low Inductance Design
- Resistor Package Electrically Isolated from Heat Sink
- Low Thermal Resistance to Heat Sink @ R_{TH}<6.25°C/W
- Tube Packaging Available

APPLICATIONS

- Frequency Conversion
- High Frequency Balancing
- Snubbers

SPECIFICATIONS

Electrical

Resistance Range: 0.05Ω to 10KΩ, other values available upon request

Tolerance: <0.1Ω: 5% only
0.1Ω-1MΩ: 5% std.; 1% available

Temperature Coefficient: Referenced to 25°C, ΔR taken at +105°C;
1 to 10Ω: ±(100ppm+0.002Ω)/°C
10Ω & up: ±50ppm/°C

Max Operating Voltage: 350V

Dielectric Strength: 1,800 VAC

Power Rating: 20W @ 25°C case temperature; see derating curve, below

Insulation Resistance: 10GΩ min.

Momentary Overload: 2x rated power for 5 seconds where applied voltage ≤1.5 times max. operating voltage. ΔR ± (0.3% + 0.001Ω) max.

Case Material: KMC-125 epoxy

Terminal Material: Copper

Terminal Plating: Lead Free Solder (97% Tin, 3% Silver)

Mounting: Requires the use of a snap-on style heat sink. A thermal compound should be properly applied.

Solder Process: The TAH20 cannot exceed 260°C for more than 10 seconds during soldering process.

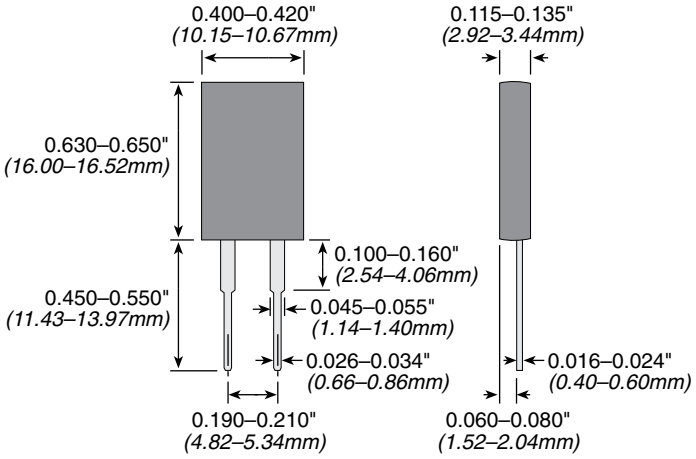

TEST DATA

Load Life	MIL-R-39009, 2000 Hours @ Rated Pwr	ΔR = ±(1.0% + 0.001) Ω
Thermal Shock	MIL-R-STD-202, Method 107, Cond. F	ΔR = ±(0.3% + 0.001) Ω max
High Freq Vibration	MIL-R-STD-202, Method 204, Cond. D	ΔR = ±(0.2% + 0.001) Ω max
Terminal Strength	MIL-R-STD-202, Method 211, Cond. A (Pull Test) 2.4N	ΔR = ±(0.2% + 0.001) Ω max
Moisture Resistance	MIL-R-STD-202, Method 106	ΔR = ±(0.5% + 0.01) Ω max

DERATING CURVE

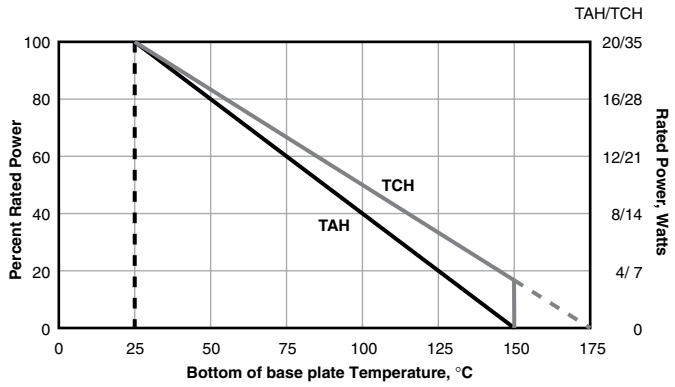

ORDERING INFORMATION

Tolerance
F = 1%
J = 5% Standard

Package Code

T A H 2 0 P 1 0 R 0 J E

Series

Ohm Value
Example:
2R40 = 2.4 Ohms
2K40 = 2400 Ohms

RoHS Compliant
Non-compliant version unavailable

Check product availability at **www.ohmite.com**

STANDARD PART NUMBERS

TAH20P100RJE	TAH20P220RJE	TAH20P33R0JE	TAH20P4R70JE	TAH20PR100JE
TAH20P10K0JE	TAH20P22R0JE	TAH20P390RJE	TAH20P510RJE	TAH20PR150JE
TAH20P10R0JE	TAH20P240RJE	TAH20P39R0JE	TAH20P51R0JE	TAH20PR200JE
TAH20P150RJE	TAH20P24R0JE	TAH20P3K30JE	TAH20P5K10JE	TAH20PR220JE
TAH20P15R0JE	TAH20P2K00JE	TAH20P3K90JE	TAH20P5R10JE	TAH20PR240JE
TAH20P1K00JE	TAH20P2K20JE	TAH20P3R30JE	TAH20P750RJE	TAH20PR330JE
TAH20P1K50JE	TAH20P2K40JE	TAH20P3R90JE	TAH20P75R0JE	TAH20PR390JE
TAH20P1R00JE	TAH20P2R00JE	TAH20P470RJE	TAH20P7K50JE	TAH20PR470JE
TAH20P1R50JE	TAH20P2R20JE	TAH20P47R0JE	TAH20P7R50JE	TAH20PR510JE
TAH20P200RJE	TAH20P2R40JE	TAH20P4K70JE	TAH20PR050JE	TAH20PR750JE
TAH20P20R0JE	TAH20P330RJE			

TBH Series

25 Watt TO220 Package Thick Film Power

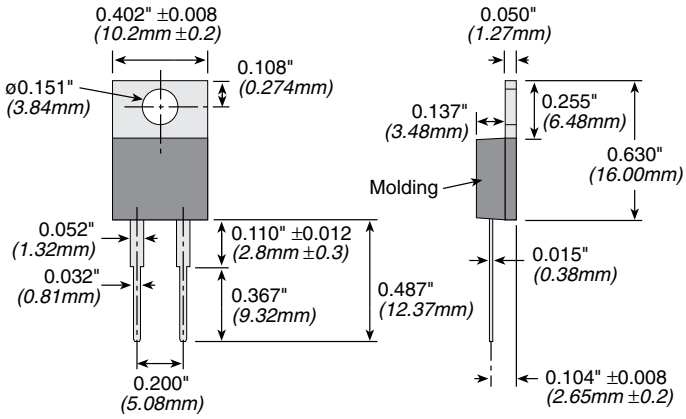

Note: These dimensions apply to TBH products manufactured after March 2007

ORDERING INFORMATION

RoHS compliant
Non-RoHS version unavailable

T B H 2 5 P 2 R 0 0 J E

- **Series**
- **Ohm Value** Example: R030 = 0.030 Ω, 10R0 = 10 Ω, 1K50 = 1500 Ω
- **Tolerance** J = 5%, standard

STANDARD PART NUMBERS FOR TBH SERIES

Ohms	Part Number 5% Tolerance
0.030	TBH25PR030JE
0.036	TBH25PR036JE
0.040	TBH25PR040JE
0.047	TBH25PR047JE
0.050	TBH25PR050JE
0.075	TBH25PR075JE
2	TBH25P2R00JE
7.5	TBH25P7R50JE
10	TBH25P10R0JE
15	TBH25P15R0JE
22	TBH25P22R0JE
30	TBH25P30R0JE
33	TBH25P33R0JE
47	TBH25P47R0JE
51	TBH25P51R0JE
75	TBH25P75R0JE
100	TBH25P100RJE
150	TBH25P150RJE
220	TBH25P220RJE
240	TBH25P240RJE
330	TBH25P330RJE
470	TBH25P470RJE
510	TBH25P510RJE
1000	TBH25P1K00JE
1500	TBH25P1K50JE
2000	TBH25P2K00JE
2700	TBH25P2K70JE
10,000	TBH25P10K0JE

Check product availability at **www.ohmite.com**

Ohmite's TBH25 TO220 style resistors are designed for a variety of uses that require intermediate heatsinkable power at an economical price. Engineered for industrial applications, these resistors deliver reliable performance to traditional high-quality Ohmite standards.

FEATURES

- 25 Watts, @ 25°C case temperature
- Non-Inductive Performance
- Low Thermal Resistance
- Anti-static tube packaging available
- Economically priced
- Resistance element is electrically insulated from metal heat sink mounting tab

APPLICATIONS

- Power Supplies
- Industrial Controls
- Automotive Steering
- Pre-load/Damping
- Snubber/Bleeder
- Current Sensing

SPECIFICATIONS

Material

Resistor: Thick film element above 1Ω, Ni-Cu metal element below 1Ω

Case: High Temperature Plastic

Terminals: Solder coated phosphor bronze

Electrical:

Derating: 100% @ 25°C to 0% @ 150°C curve referenced to case temperature

Dielectric Strength: 1000 VDC

Max. Mounting Torque: 0.9Nm

Operating Temperature Range: -55°C to +150°C

Temperature Coefficient: 0.03-10Ω @ ±100ppm
11Ω-10KΩ @ ±50ppm

Thermal Resistance: 5°C/W

Tolerance: 5%

Power: 25 Watts. Rating based on 25°C case temperature. The case temperature is to be used for the purposes of establishing the applied power limit. The case temperature must be made with thermocouple contacting the center of the component's mounting tab mounted on designated heat sink.

Resistance Range: 0.03Ω - 10KΩ. Standard values listed at left, others available upon special request.

Max. Operating Voltage: 350V

TEST DATA

Load Life	(1000hrs @ rated power)	max. ΔR ±1%
Moisture Resistance	(MIL-STD-202, method 106)	max. ΔR ±0.5%
Short Time Overload	(2x rated power, not to exceed 1.5x max. operating voltage)	max. ΔR ±0.3%
Solderability	(MIL-STD-202, method 208)	
Thermal Shock	(MIL-STD-202, method 107, cond. F)	max. ΔR ±0.3%
Terminal Strength	(MIL-STD-202, method 211, cond. A (pull test) 2.4N)	max. ΔR ±0.2%
Vibration	(MIL-STD-202, method 204, cond. D)	max. ΔR ±0.2%

TCH Series

35 Watt TO220 Package Thick Film Power

Ohmite's TCH35 TO220 package resistor provides 35W of steady state power when properly used in today's well defined heat sink applications.

These very low induction resistors are built under proprietary processes that deliver more power handling capability than other TO220 package resistors of similar size.

Standard terminal forms are provided for manual or automatic insertion.

A single screw mounting tab connects to the heat sink and should be accompanied by the use of a thermal compound. The TCH35 Series offers a low thermal resistance to the heat sink of <4.28°C/W.

FEATURES

- 35W Power Rating @ 25°C
- Very Low Inductance Design
- Single Screw Mounting
- Low Thermal Resistance to Heat Sink @ R_{TH}<4.28°C/W
- Resistance Element is Electrically Insulated from Metal Heat Sink Mounting Tab

APPLICATIONS

- Switching Power Supplies
- Snubbers
- High Frequency
- Voltage Regulation
- Low Energy Pulse Loading

SPECIFICATIONS

Electrical

Resistance Range: 0.1Ω to 10KΩ (higher values on request subject to derating)

Resistance Tolerance:
± 5% standard
± 1% available on request

Temperature Coefficient:
Referenced to 25°C, ΔR taken at +105°C
10Ω and above: ±50 ppm°C
For under 10Ω:
0R6 - 9R9 ..... 100PPM
0R4 - 0R59 ..... 150PPM
0R2 - 0R39 ..... 250PPM
0R1 - 0R19 ..... 500PPM
0R05 - 0R09 ... 1000PPM

Max. Operating Voltage: 350V

Dielectric Strength: 1800 VAC

Insulation Resistance: 10GΩ min.

Momentary Overload: 2x rated power for 5 seconds as long as the applied voltage ≤1.5 times the continuous operating voltage, where ΔR ±(0.3% + 0.01Ω) max

Terminal Material: Copper

Terminal Plating: Lead Free Solder (97% Tin, 3% Silver)

Maximum Torque: 0.9 Nm

Power Rating: 35 Watts @ 25°C case temperature; see derating curve, below

Working Temperature Range: -55°C to +175°C

Solder Process: The TCH35 cannot exceed 260°C for more than 10 seconds during soldering process.

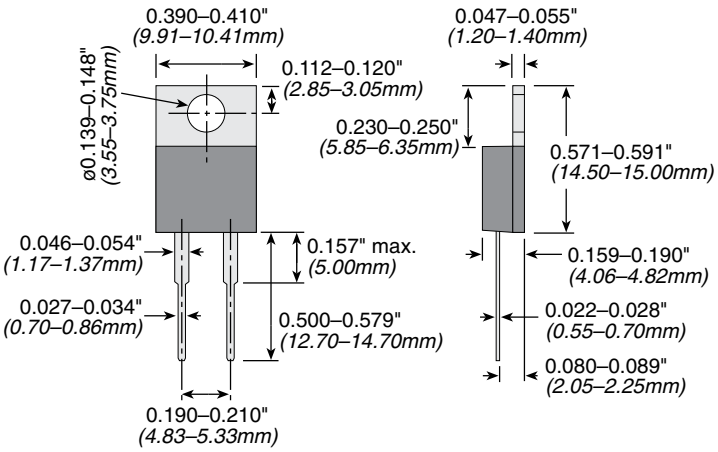

TEST DATA

Load Life	MIL-R-39009, 2000 Hours @ Rated Pwr	ΔR = ± (1.0% + 0.01) Ω
Thermal Shock	MIL-R-STD-202, Method 107, Cond. F	ΔR = ± (0.3% + 0.01) Ω max
High Freq Vibration	MIL-R-STD-202, Method 204, Cond. D	ΔR = ± (0.2% + 0.01) Ω max
Terminal Strength	MIL-R-STD-202, Method 211, Cond. A (Pull Test) 2.4N	ΔR = ± (0.2% + 0.01) Ω max
Moisture Resistance	MIL-R-STD-202, Method 106	ΔR = ± (0.5% + 0.01) Ω max

DERATING CURVE

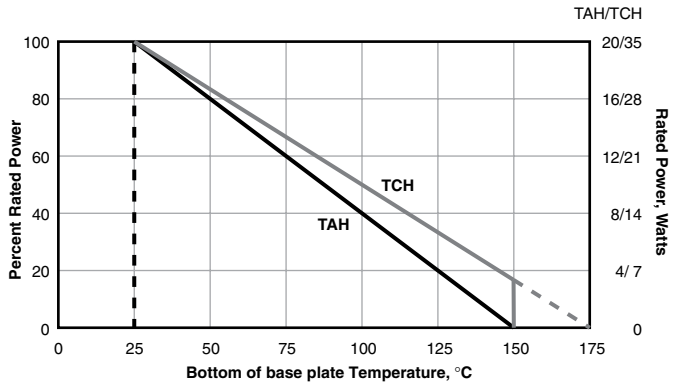

ORDERING INFORMATION

T C H 3 5 P 1 0 R 0 J E

- **Series**: TCH35
- **Package Code**: P
- **Ohm Value**: 10R0 — Example: 2R40 = 2.4 Ohms, 2K40 = 2400 Ohms
- **Tolerance**: F = 1%, J = 5% Standard
- **RoHS Compliant**: E — Non-compliant version unavailable

Check product availability at **www.ohmite.com**

STANDARD PART NUMBERS

TCH35P100RJE	TCH35P220RJE	TCH35P33R0JE	TCH35P510RJE	TCH35PR200JE
TCH35P10K0JE	TCH35P22R0JE	TCH35P390RJE	TCH35P51R0JE	TCH35PR220JE
TCH35P10R0JE	TCH35P240RJE	TCH35P39R0JE	TCH35P5K10JE	TCH35PR240JE
TCH35P150RJE	TCH35P24R0JE	TCH35P3K30JE	TCH35P5R10JE	TCH35PR330JE
TCH35P15R0JE	TCH35P2K00JE	TCH35P3K90JE	TCH35P5R60JE	TCH35PR390JE
TCH35P1K00JE	TCH35P2K20JE	TCH35P3R30JE	TCH35P750RJE	TCH35PR470JE
TCH35P1K50JE	TCH35P2K40JE	TCH35P3R90JE	TCH35P75R0JE	TCH35PR510JE
TCH35P1R00JE	TCH35P2R00JE	TCH35P470RJE	TCH35P7K50JE	TCH35PR560JE
TCH35P1R50JE	TCH35P2R20JE	TCH35P47R0JE	TCH35P7R50JE	TCH35PR750JE
TCH35P200RJE	TCH35P2R40JE	TCH35P4K70JE	TCH35PR100JE	TCH35PR050JE
TCH35P20R0JE	TCH35P330RJE	TCH35P4R70JE	TCH35PR150JE	

TDH Series

35 Watt DPAK Package
Thick Film Power Surface Mount

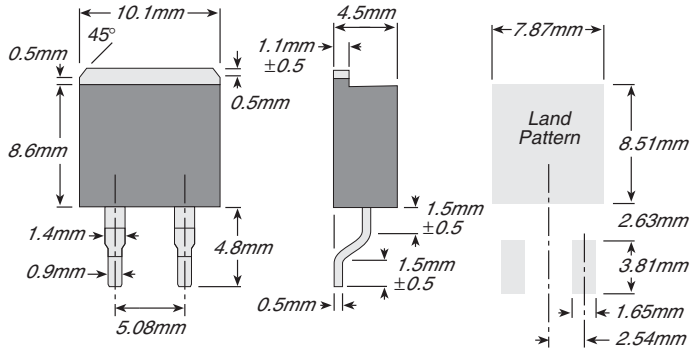

DPAK style power package for surface mounting applications; 35W power rating at 25°C case temperature.

Soldering note: During surface mount soldering the soldering temperature profile must not cause the metal tab of this device to exceed 220°C (260°C for the TDH35H)!

Ohmite's TDH resistor is an economical solution to intermediate power application design requirements. TDH's reliable thick film on alumina substrate construction can be easily heat sinked for higher power performance. TDH resistors are ideal for pulse-loading, pre-charge, bleeder, and snubber applications.

FEATURES

- 35 Watt power rating at 25°C
- SMD - DPAK package configuration
- Heat resistance to cooling plate: R_{th} <4.28°C/W
- A molded case for environmental protection.
- Resistor element is electrically insulated from the metal sink tab.

SPECIFICATIONS

Material

Terminal: Copper

Terminal Plating: Lead Free Solder (97% Tin, 3% Silver)

Electrical

Resistance Range: 0.05Ω to 10KΩ other values on request

Tolerance: ±1% to ±10% (0.5% on request)

Max. Operating Voltage: 350V

Insulation Resistance: 10GΩ min.

Power Rating: Depends upon case temperature. See derating curve.

Working Temperature Range: -55°C to +175°C

Solder Process: The TDH35P cannot exceed 220°C (260°C for the TDH35H) for more than 10 seconds during soldering process.

Derating: 100% @ 25°C to 0% @ 150°C curve referenced to case temperature

Dielectric Strength: 1,800VAC

Operating Temperature Range: -55°C to +150°C

Temperature Coefficient: 10Ω and above, ±50ppm/°C, referenced to 25°C, ΔR taken at +105°C. Between 1 and 10Ω, ±(100ppm+0.002Ω)/°C, referenced to 25°C, ΔR taken at +105°C. For under 10Ω:

0R6 - 9R9 ..... 100PPM
0R4 - 0R59 ..... 150PPM
0R2 - 0R39 ..... 250PPM
0R1 - 0R19 ..... 500PPM
0R05 - 0R09 ... 1000PPM

Inductance: less than 20 nanohenries

Flatness: less than 0.1mm tolerance

TEST DATA

Load Life	(MIL–R–39009, 2,000 hours	ΔR ±(1.0% +0.01Ω)
Moisture Resistance	(MIL–Std–202, Method 106)	ΔR =(0.5% +0.01Ω) max.
Short Time Overload	(2 times rated power with applied voltage not to exceed 1.5 times maximum continuous operating voltage for 5 seconds)	ΔR ±(0.3% + 0.01Ω) max.
Thermal Shock	(MIL–Std–202, Method 107, Cond. F)	ΔR =(0.3% + 0.01Ω) max.
Terminal Strength	(MIL–Std–202, Method 211, Cond. A (Pull Test) 2.4N)	ΔR =(0.2% + 0.01Ω) max.
Vibration, High Frequency	(MIL-STD-202, method 211, cond. A (pull test) 2.4N)	ΔR =(0.2% + 0.01Ω) max.

ORDERING INFORMATION

T D H 3 5 P R 1 0 0 J E -T R

- **Style**: TDH35
- **Package Modifier**: P = low temp. H = high temp.
- **Ohms**: R = Decimal Example: R100= 0.10, 1R00= 1.0, 10K0= 10,000
- **Tolerance**: F = 1% J = 5% K = 10%
- **RoHS Compliant**: Non-compliant version unavailable
- **Tape and reel** (optional) 750 per reel

Check product availability at **www.ohmite.com**

STANDARD PART NUMBERS FOR TDH SERIES

Ohms	Part Number 5% Tolerance
0.10	TDH35PR100JE
0.15	TDH35PR150JE
0.20	TDH35PR200JE
0.25	TDH35PR250JE
0.30	TDH35PR300JE
0.36	TDH35PR360JE
0.47	TDH35PR470JE
0.50	TDH35PR500JE
0.75	TDH35PR750JE
1.0	TDH35P1R00JE
2.0	TDH35P2R00JE
3.0	TDH35P3R00JE
5.0	TDH35P5R00JE
7.5	TDH35P7R50JE
10	TDH35P10R0JE
15	TDH35P15R0JE
20	TDH35P20R0JE
25	TDH35P25R0JE
33	TDH35P33R0JE
39	TDH35P39R0JE
47	TDH35P47R0JE
68	TDH35P68R0JE
75	TDH35P75R0JE
100	TDH35P100RJE
150	TDH35P150RJE
200	TDH35P200RJE
250	TDH35P250RJE
300	TDH35P300RJE
500	TDH35P500RJE
750	TDH35P750RJE
1000	TDH35P1K00JE
1500	TDH35P1K50JE
2500	TDH35P2K50JE
3000	TDH35P3K00JE
5000	TDH35P5K00JE

DERATING

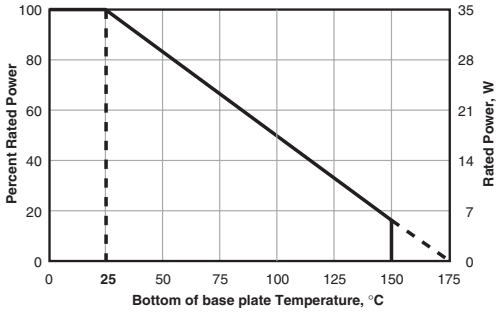

Derating (thermal resistance): 0.23W/°C (4.28°C/W). The case temperature is to be used for purposes of establishing the applied power limit. The case temperature measurement must be made with a thermocouple contacting the center of the component mounted on the designed heat sink. Thermal grease should be applied propperly.

TAPE DIMENSIONS

750 pc./reel

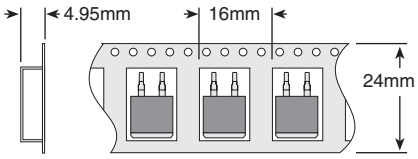

TEH70 Series

70 Watt TO247 Package
Thick Film Power

FEATURES

- 70 Watt power rating at 25°C case temperature
- Non-inductive performance
- Low thermal resistance
- RoHS compliant design
- Two or three terminal versions available
- Heat sink can be grounded through middle terminal (P style)

SPECIFICATIONS

Material

Resistor: thick film on alumina

Lead: solder coated phosphor bronze

Solder: 100% Sn

Case: high temperature plastic

P Package: middle terminal is electrically connected to header and insulated from left and right terminals

M Package: no middle terminal

Electrical

Derating: linear, 100% at 25°C to 0% at 150°C

Resistance range: 2Ω-10KΩ

Max. working voltage: 500V or Ohm's Law limited

Thermal Resistance: 1.79°C/W

Temperature Coefficient:
2Ω-10Ω: ±100ppm
10Ω-10KΩ: ±50ppm

Insulation Resistance: 400 MΩ

Short time overload: 2x rated power for 5 sec., not to exceed 1.5x max. working voltage

Dielectric Strength: 2000 VDC

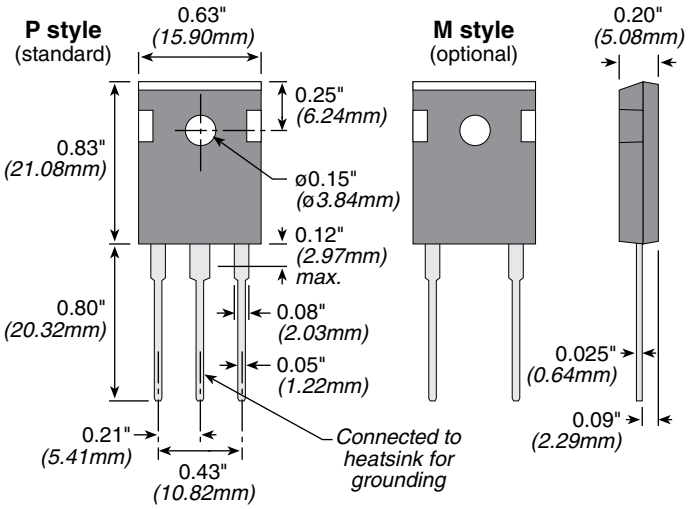

TEST DATA

Test	Conditions Of Test	Performance
Load life	1000 hrs @ rated power	±1% ΔR
Moisture resistance	MIL -STD-202, method 106	±0.5% ΔR
Short time overload	2x rated power for 5 sec., not to exceed 1.5x max. working voltage	±0.3% ΔR
Solderability	MIL-STD-202, method 208	
Thermal shock	MIL-STD-202, method 170, cond. F	±0.2% ΔR

DERATING

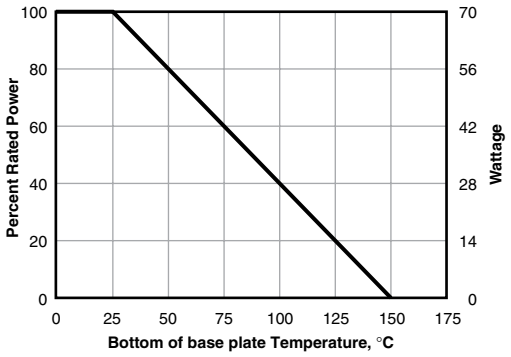

STANDARD PART NUMBERS FOR TEH SERIES

Ohms	P-type 3-terminal	M-type 2-terminal
2	TEH70P2R00JE	TEH70M2R00JE
3	TEH70P3R00JE	TEH70M3R00JE
4	TEH70P4R00JE	
5	TEH70P5R00JE	TEH70M5R00JE
7.5	TEH70P7R50JE	TEH70M7R50JE
10	TEH70P10R0JE	TEH70M10R0JE
15	TEH70P15R0JE	TEH70M15R0JE
20	TEH70P20R0JE	
24	TEH70P24R0JE	TEH70M24R0JE
33		TEH70M33R0JE
39		TEH70M39R0JE
47	TEH70P47R0JE	TEH70M47R0JE
68	TEH70P68R0JE	TEH70M68R0JE
75		TEH70M75R0JE
100	TEH70P100RJE	TEH70M100RJE
150	TEH70P150RJE	TEH70M150RJE
270	TEH70P270RJE	TEH70M270RJE
470	TEH70P470RJE	TEH70M470RJE
680		TEH70M680RJE
750	TEH70P750RJE	TEH70M750RJE
1000	TEH70P1K00JE	TEH70M1K00JE
1500	TEH70P1K50JE	TEH70M1K50JE
2000	TEH70P2K00JE	TEH70M2K00JE
3000		TEH70M3K00JE
5000	TEH70P5K00JE	TEH70M5K00JE
7500	TEH70P7K50JE	
10000		TEH70M10K0JE

ORDERING INFORMATION

Package Code
P = three terminals
M = two terminals

RoHS Compliant
Non-compliant version unavailble

T E H 7 0 P 1 0 R 0 J E

Series

Ohms
R = Decimal
Example:
10R2 = 10.2 ohms
100R = 100 ohms
15K0 = 15,000 ohms

Tolerance
J = 5%

Check product availability at **www.ohmite.com**

Check product availability using the Worldwide Inventory Search at ohmite.com

TEH100 Series

100 Watt Thick Film Power Resistors for High Frequency and Pulse Loading Applications

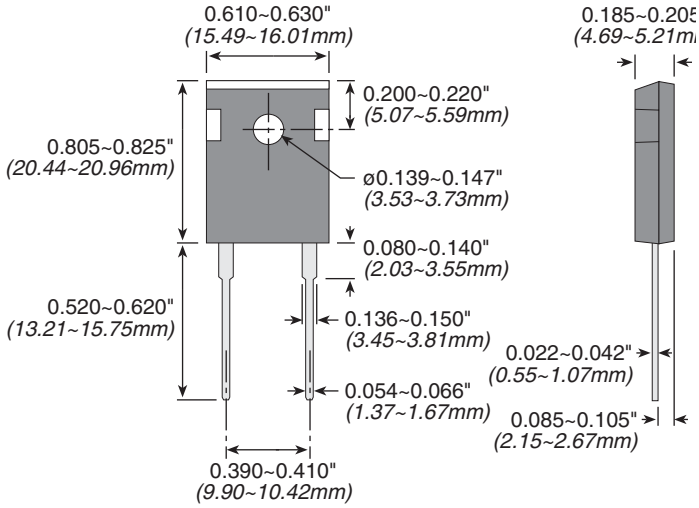

Ohmite offers the totally encapsulated and insulated TO-247 package for low ohmic value and non-inductive design for high-frequency and pulsing applications. Ideal use is for power supplies. This series is rated at 100 Watts mounted to a heat sink.

FEATURES

- 100 Watt power rating at 25°C case temperature
- Non-inductive performance
- Low thermal resistance
- RoHS compliant design
- TO-247 package configuration
- Single screw mounting simplifies attach-ment to the heat sink
- A totally molded housing for envi-romental protection
- Non-Inductive design
- Resistor package totally insulated from heat sink

SPECIFICATIONS

Material

Resistor: thick film on alumina
Case: high temperature plastic
Lead Material: Tinned Copper
Installation, max. Torque: 0.9 Nm using an M3 screw and a com-pression washer

Electrical

Derating: linear, 100% at 25°C to 0% at 175°C
Resistance range: 0.05Ω to 1MΩ, other values on request
Resistance tol.: ±1%, ±2%, ±5%, ±10%
Max. working voltage: 350V
Temperature Coefficient: ±50ppm/°C for >10Ω, referenced to 25°C, ΔR taken at +105°C; others on request
Insulation Resistance: 10GΩ min.
Dielectric Strength: 1,800 VAC

ORDERING INFORMATION

Package Code
M = two terminals

RoHS Compliant
Non-compliant version unavailble

T E H 1 0 0 M 1 0 R 0 J E

Series

Ohms
R = Decimal
Example:
2R50 = 2.50Ω
25R0 = 25Ω
100R = 100Ω
1K00 = 1000Ω

Tolerance
F = 1%
J = 5%

Check product availability at **www.ohmite.com**

TEST DATA

Test	Conditions Of Test	Performance
Load life	MIL-R-39009D 4.8.13 , 2,000 hours at rated power	ΔR ≤ ±(1.0% + 0.0005Ω)
Moisture resistance	-10°C - +65°C, RH>90%, cycle 240 h	ΔR ≤ ±(0.50% + 0.0005Ω)
Short time overload	1.5 times rated power and V(DC) ≤1.5Vmax for 5 seconds	ΔR ≤ ± (0.50% + 0.0005Ω)
Thermal shock	GJB360A-96 method 107, Cond. F	ΔR ≤ ±(0.50% + 0.0005Ω)
Dielectric strength	GJB360A-96 method 301, (1,800V AC, 60s)	ΔR ≤ ± (0.15% + 0.0005Ω)
Terminal strength	GJB360A-96 method 211, Cond. A (Pull Test) 2.4N	ΔR ≤ ±(0.20% + 0.0005Ω)
High frequency vibration	GJB360A-96 method 204, Cond. D	ΔR ≤ ±(0.40% + 0.0005Ω)

STANDARD PART NUMBERS FOR TEH SERIES

Ohms	5% tolerance	1% tolerance
0.05	TEH100MR050JE	
0.075	TEH100MR075JE	
0.1	TEH100MR100JE	
0.2	TEH100MR200JE	
0.5	TEH100MR500JE	
1	TEH100M1R00JE	TEH100M1R00FE
2	TEH100M2R00JE	TEH100M2R00FE
2.5	TEH100M2R50JE	TEH100M2R50FE
3	TEH100M3R00JE	TEH100M3R00FE
5	TEH100M5R00JE	TEH100M5R00FE
7.5	TEH100M7R50JE	TEH100M7R50FE
10	TEH100M10R0JE	TEH100M10R0FE
15	TEH100M15R0JE	TEH100M15R0FE
20	TEH100M20R0JE	TEH100M20R0FE
25	TEH100M25R0JE	TEH100M25R0FE
50	TEH100M50R0JE	TEH100M50R0FE
100	TEH100M100RJE	TEH100M100RFE
470	TEH100M470RJE	
750	TEH100M750RJE	
1K	TEH100M1K00JE	

DERATING

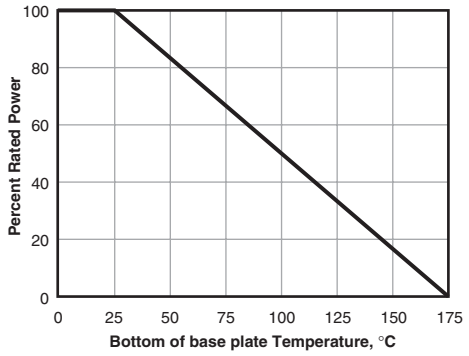

Derating (thermal resistance): 0.666W/°K (1.5K/W). Without a heatsink, when in free air at 25°C, the TEH100 is rated for 3.5W. Derating for temp. above 25°C is 0.0234W/°K.

Graphed value is only valid when using a thermal conduction to the heatsink Rth-cs<0.025°K/W. This value can be reached by using thermal transfer compound with a heat conductivity of 1W/mK. The flatness of the cooling plate must be better than 0.05mm overall. The roughness of the surface should not exceed 6.4µm. The case temperature is to be used for the definitiion of the applied power limit. The case temperature measurement must be made with a thermocouple contacting the center of the component mounted on the designed heat sink. Thermal grease should be applied properly

Check product availability using the Worldwide Inventory Search at ohmite.com

TFH Series

85 Watt TO264 Package Thick Film Power

FEATURES

- 85 Watt power rating at 25°C case temperature
- Non-inductive performance
- Low thermal resistance
- RoHS compliant design
- Two or three terminals versions available
- Heat sink can be grounded through middle terminal (P style)

SPECIFICATIONS

Material

Resistor: thick film on alumina
Lead: solder coated phosphor bronze
Solder: 100% Sn
Case: high temperature plastic
P Package: middle terminal is electrically connected to header and insulated from left and right terminals
M Package: no middle terminal

Electrical

Resistance range: 2Ω-10KΩ
Max. working voltage: 500V or Ohm's law limited
Thermal Resistance: 1.47°C/W
Temperature Coefficient:
2Ω-10Ω: ±100ppm
10Ω-10KΩ: ±50ppm
Insulation Resistance: 400MΩ
Short time overload: 2x rated power (not to exceed 1500V)
Derating: linear, 100% at 25°C to 0% at 150°C

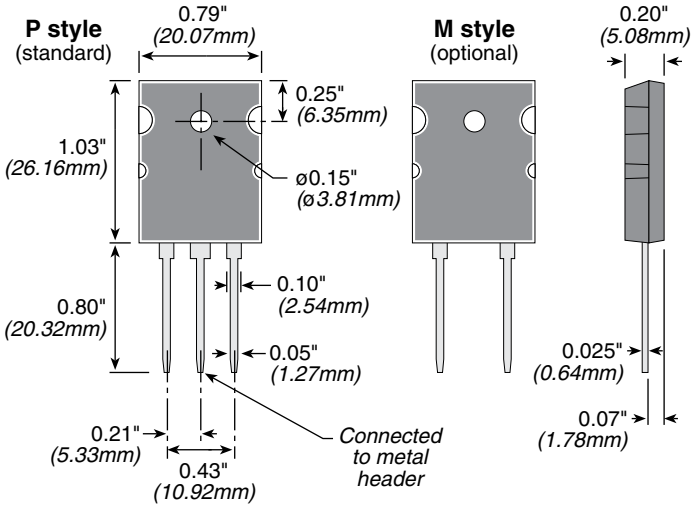

DERATING

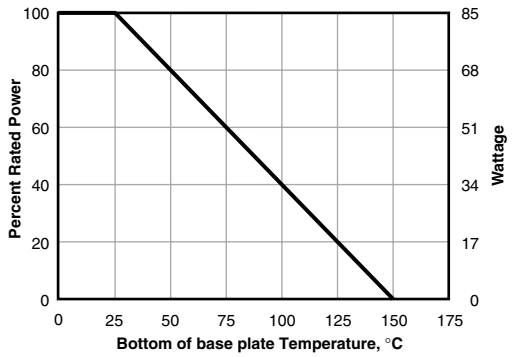

ORDERING INFORMATION

Package Code
P = three terminals
M = two terminals

RoHS compliant

T F H 8 5 P 1 0 R 0 J E

Series

Ohms
R = Decimal
Example:
10R2 = 10.2 ohms
100R = 100 ohms
10K0 = 10,000 ohms

Tolerance
J = 5%

PERFORMANCE DATA

Load life	1000 hrs @ rated power	max. ΔR ±1%
Moisture resistance	MIL -STD-202, method 106	max. ΔR ±0.5%
Short time overload	2x rated power for 5 sec., not to exceed 1500 V	max. ΔR ±0.3%
Solderability	MIL-STD-202, method 208	
Thermal shock	MIL-STD-202, method 170, cond. F	max. ΔR ±0.2%

To see the latest in resistor technology click on the "What's New" tab at ohmite.com

STANDARD PART NUMBERS FOR TFH SERIES

Ohms	P-type 3-terminal	M-type 2-terminal
2	TFH85P2R00JE	
3		TFH85M3R00JE
5.1	TFH85P5R10JE	
6.8		TFH85M6R80JE
7.5	TFH85P7R50JE	
10	TFH85P10R0JE	TFH85M10R0JE
15	TFH85P15R0JE	
24		TFH85M24R0JE
33		TFH85M33R0JE
39	TFH85P39R0JE	
51	TFH85P51R0JE	TFH85M51R0JE
68	TFH85P68R0JE	
75	TFH85P75R0JE	
100	TFH85P100RJE	TFH85M100RJE
150		TFH85M150RJE
220	TFH85P220RJE	
330	TFH85P330RJE	
470		TFH85M470RJE
750	TFH85P750RJE	
1000	TFH85P1K00JE	TFH85M1K00JE
1500	TFH85P1K50JE	
2700		TFH85M2K70JE
3300	TFH85P3K30JE	
4700		TFH85M4K70JE
6800	TFH85P6K80JE	
7500	TFH85P7K50JE	
10000	TFH85P10K0JE	TFH85M10K0JE

Check product availability at **www.ohmite.com**

TGH Series

120 and 200 Watt SOT227Package Thick Film Power

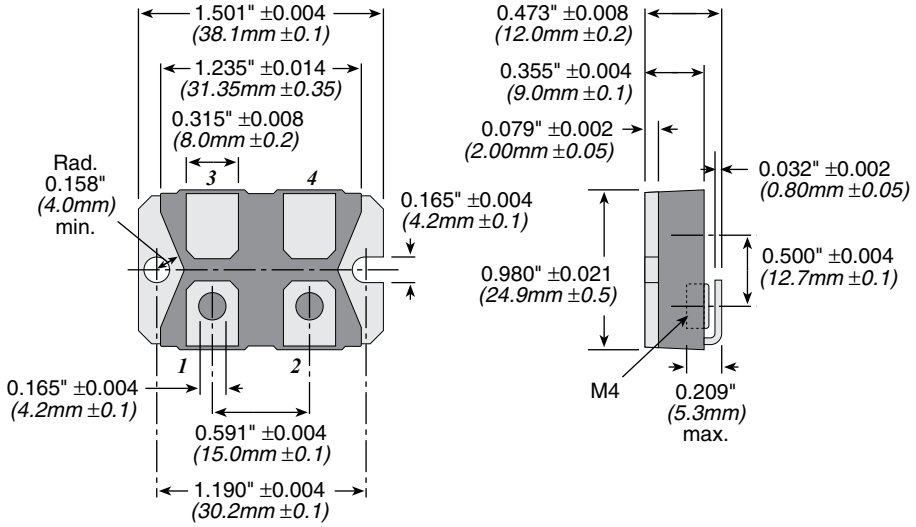

Due to their non-inductive design, these resistors are ideally suited for high-frequency and pulse-load applications. Available in 120- or 200-watt sizes, this resistor is designed for direct mounting onto a heatsink. Popular applications include variable speed drives, power supplies, control devices, telecom, robotics, motor controls, and other switching designs.

STANDARD PART NUMBERS

Ohms	120 Watt TGHH	200 Watt TGHL
0.1	TGHHVR100JE	TGHLVR100JE
0.5		TGHLVR500JE
1	TGHHV1R00JE	TGHLV1R00JE
5	TGHHV5R00JE	
10	TGHHV10R0JE	TGHLV10R0JE
25		TGHLV25R0JE
33	TGHHV33R0JE	TGHLV33R0JE
50	TGHHV50R0JE	
100	TGHHV100RJE	TGHLV100RJE
150	TGHHV150RJE	TGHLV150RJE
500	TGHHV500RJE	TGHLV500RJE
680	TGHHV680RJE	TGHLV680RJE
1K	TGHHV1K00JE	TGHLV1K00JE
5K	TGHHV5K00JE	TGHLV5K00JE
10K	TGHHV10K0JE	TGHLV10K0JE

ORDERING INFORMATION

Configuration
V = config. 1
X = config. 2

E = RoHS compliant

T G H H V 1 R 0 0 J E

SOT 227 Series

Wattage
H = 120W
L = 200W

Resistance Value
Example:
R500 = 0.500Ω
1R00 = 1Ω
250R = 250Ω
1K00 = 1,000Ω
10K0 = 10,000Ω

Tolerance
J = 5%

Check product availability at **www.ohmite.com**

SPECIFICATIONS

Material
Heat Sink: Nickel-plated copper
Contacts: Nickel-plated copper
Substrate: Al203 (96%)
Molding Compound: High-performance epoxy, compliant to UL94-V0
Terminal Nuts: American standard 303 stainless steel

Electrical
Resistance Range: 0.1Ω to 1MΩ
Tolerance: ±5%
Temperature coefficient: ±250ppm (at +105°C ref. to +25°C)
Max. Work.Voltage: 500V (up to 1,000V on special request)
Power Rating at 85°C: 120W (see derating)
Partial Discharge: up to 2,000Vrms/80 pC
Voltage Proof: Dielectric Strength up to 4,000V DC against ground
Heat Resistance to Cooling Plate: R_{th} <0.35 K/W
Capacitance/Mass: 45pF
Working Temp. Range: -55°C to +155°C
Max. Torque for Base Plate (static): 1.5 Nm
Max. Torque for Contacts (static): 1.3 Nm. M4 screws (not included)
Derating (thermal resistance): 2.86W/°K (0.35°K/W)

DERATING

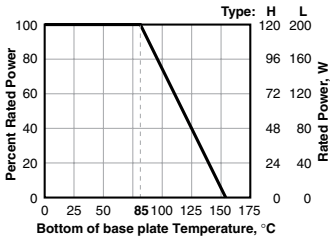

Best results can be reached by using a thermal transfer compound with a heat conductivity of better than 1W/mK

CONFIGURATIONS

(per package)

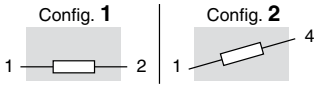

Subscribe to our New Product Bulletin at ohmite.com

TGHG Series

Precision Current Sense Resistors

The TGHG Series uses state of the art technology to provide highly reliable, non inductive performance. This resistor is ideal for many current monitoring and controls applications.

FEATURES

- Resistance values beginning at 0.5mΩ
- Non Inductive
- Four terminal Kelvin connection
- SOT 227 Package
- Four terminals to isolate measurement path from current flow path
- Accuracy in a high power package

SPECIFICATIONS

Heat Sink: Nickel-plated copper
Terminal Nuts: American standard 303 stainless steel
Standard Resistance Values: 0.5mΩ-1Ω, others on request
Resistance Tolerances: 1%
Temperature Coefficient: referenced to 25°C, ΔR taken at -15°C and +105°C, <60ppm/°C; <500ppm/°C for resistance range 27mΩ-49mΩ)
Power Rating: 100W at 70°C case temperature; 50Amp permanent (higher on request)
Dielectric strength: 1000VDC, higher value on request
Heat Resistance: R_{th} <0.56K/W
Protection class: acc. to IEC 950/CSA22.2 950/M -89 and EN 60950.88:2
Working Temp. Range: -55°C to +155°C
Max. Torque for Contacts: 1.3Nm 8 (static)
Max Torque for Base Plate: 1.5 Nm (static)
Maximum Cont. Amperage: 200 amps depending on Ohmic value

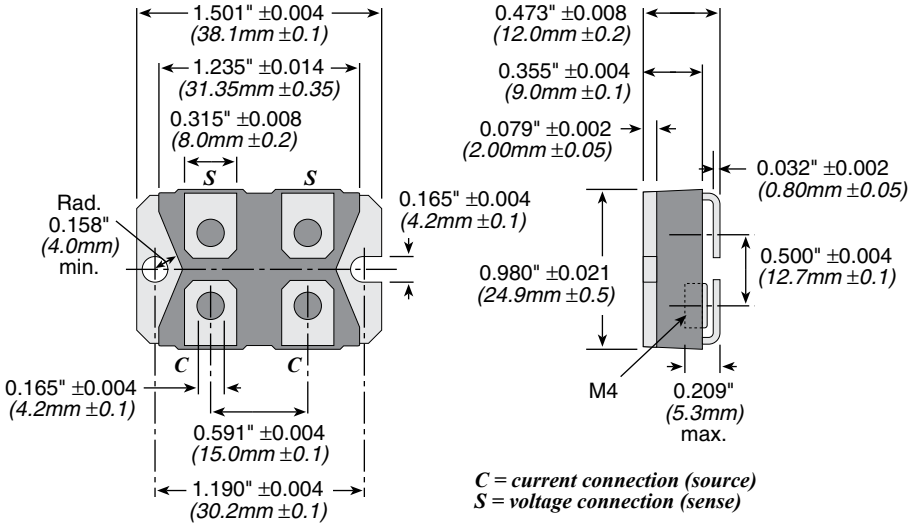

DERATING

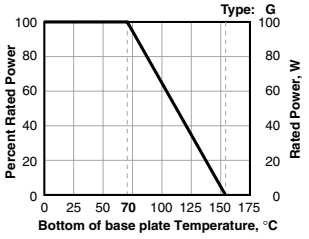

Best results can be reached by using a thermal transfer compound with a heat conductivity of better than 1W/mK

ORDERING INFORMATION

Configuration
C = current sense

E = RoHS compliant

T G H G C R 0 2 0 0 F E

- **TGH = series**
- **Wattage** G = 100W
- **Resistance Value** Example: R0200=0.02 ohms
- **Tolerance** F = 1%

Check product availability at **www.ohmite.com**

STD. PART NUMBERS

Ohms	100 Watt TGHG
0.00050	TGHGCR0005FE
0.00100	TGHGCR0010FE
0.00200	TGHGCR0020FE
0.00500	TGHGCR0050FE
0.01000	TGHGCR0100FE
0.01500	TGHGCR0150FE
0.02000	TGHGCR0200FE
0.02500	TGHGCR0250FE
0.05000	TGHGCR0500FE
0.0750	TGHGCR0750FE
0.1000	TGHGCR1000FE

Subscribe to our New Product Bulletin at ohmite.com

TK/TN Series

20 and 15 Watt TO-220 Package Thick and Thin Film

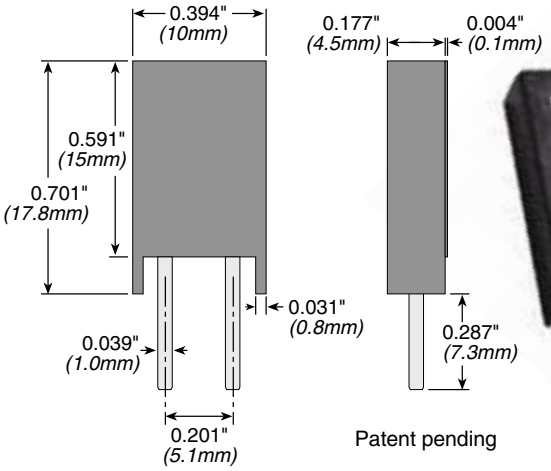

Patent pending

Ohmite is proud to introduce the newest addition to our family of Heat Sinkable Power Resistors. The TK/TN Series offers 3 major advances over existing TO-220 products:

- Low Resistance Values down to 0.03 ohms for current sense applications
- Low Cost
- Thin Film Construction is the first Thin Film power resistor in heatsinkable packaging on the market.

WHY THIN FILM?

Thin film technology offers the following performance advantages:

- Extremely stable (low TCR)
- Low Noise (parasitic capacitance and resistance)
- Excellent High Frequency Performance
- High Accuracy (tight tolerances)

BRACKET

6200E: recommended mounting bracket kit (optional)

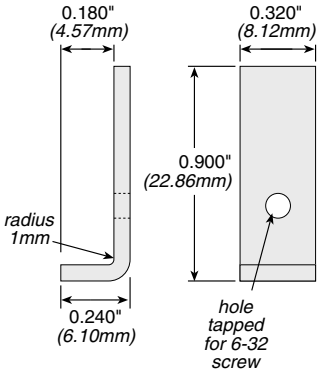

TK/TN mounted vertically

SPECIFICATIONS

Material
Resistive element: Thick or thin film chip resistor
Leads: Tin plated copper (100Sn)
Case: Ryton
Heatsink plate: Black anodized aluminum

Electrical		Thick film TK20	Thin film TN15
Power rating: (Heat-sink dependent; must be attached to a proper heat sink for full power rating. Max. case temp. cannot exceed 150°C.)		20W	15W
Derating:		Linear, 100% at 25°C to 0% at 150°C	
Resistance Range:		10mΩ-10KΩ	4Ω-10KΩ
Tolerance:		5%	1%, 2%
Max. working voltage:	0.01Ω-1KΩ:	$\sqrt{20*R}$	$\sqrt{15*R}$
	3KΩ-10KΩ:	150V	200V
Max. working current:	0.01Ω-0.1Ω:	10A	
	0.3Ω-10KΩ:	$\sqrt{20/R}$	
	4Ω-10KΩ:		$\sqrt{15/R}$
TCR:	0.01Ω-0.1Ω:	±300ppm	
	0.3Ω-10KΩ:	±200ppm	
	4Ω-10KΩ:		±50ppm (lower available)
Thermal resistance. RTH:		<6.25°C/W	<8.33°C/W

ORDERING INFORMATION

T K 2 0 P 1 R 0 0 J E

Series
TK20 = 20W thick film
TN15 = 15W thin film

TCR *(TN15 only)*
P = ±50ppm
L = ±25ppm
V = ±10ppm
X = ±5ppm

Resistance
Example:
R075 = 75mΩ
7R50 = 7.5Ω
75R0 = 75Ω
7K50 = 7500Ω

Tolerance
F = 1%
G = 2%
J = 5%

RoHS Compliant

STANDARD PART NUMBERS

Ohms	TK20 thick film 20 watt 5% tol.	TN15 thin film 15 watt 1% tol.	2% tol.
0.03	TK20PR030JE		
0.04	TK20PR040JE		
0.05	TK20PR050JE		
0.075	TK20PR075JE		
0.1	TK20PR100JE		
0.3	TK20PR300JE		
0.4	TK20PR400JE		
0.5	TK20PR500JE		
0.75	TK20PR750JE		
1	TK20P1R00JE		
3	TK20P3R00JE		
4	TK20P4R00JE	TN15P4R00FE	
5	TK20P5R00JE	TN15P5R00FE	
7.5	TK20P7R50JE	TN15P7R50FE	
10	TK20P10R0JE		TN15P10R0GE
30	TK20P30R0JE	TN15P30R0FE	
40	TK20P40R0JE	TN15P40R0FE	
50	TK20P50R0JE	TN15P50R0FE	
75	TK20P75R0JE	TN15P75R0FE	
100	TK20P100RJE		TN15P100RGE
300	TK20P300RJE	TN15P300RFE	
400	TK20P400RJE	TN15P400RFE	
500	TK20P500RJE	TN15P500RFE	
750	TK20P750RJE	TN15P750RFE	
1000	TK20P1K00JE		TN15P1K00GE
3000	TK20P3K00JE	TN15P3K00FE	
4000	TK20P4K00JE	TN15P4K00FE	
5000	TK20P5K00JE	TN15P5K00FE	
7500	TK20P7K50JE	TN15P7K50FE	
10,000	TK20P10K0JE		TN15P10K0GE

Check product availability at **www.ohmite.com**

D Series Heatsinks

For SMT devices

Ohmite D Series heatsinks provide an innovative solution for SMT compatible semiconductors and resistors. The unique design (Patent Pending) combines tin plated, solderable rods with an aluminum extruded heat sink body. These rods (or "rollers") are mated mechanically to the heatsink by forging to reduce the thermal resistance between the heatsink body and the solderable feet.

Specifically designed for use with the increasingly popular TO-252, TO-263 and TO-268 packages, the D Series affords the user superior thermal performance over the more common stamped aluminum heatsinks. By eliminating the staking joint typically used in stamped heatsinks, the resulting air gap and thermal "bottleneck" is also eliminated, while surface area for cooling is maximized with the extruded fins of the D Series body.

FEATURES

- Increased thermal performance up to 30% over bright copper heat sinks from improved radiation of the black finish
- Increased surface areas by 3 times therefore thermal performance up to 300% over the aluminum stamped heat sinks on markets
- Unique aluminum extrusion design reduces the heat sink cost ver sus similar designs utilizing copper
- Light weight aluminum construction allows faster pick and place assembly reducing the manufacturing cycle time
- Radius mounted "Rollers" are designed for maximizing heat transfer from the component and avoiding the thermal "bottleneck" seen in stamped and staked heatsinks.
- Available in bulk packaging or tape & reel (250 units per reel
- **Weight:** D2 (TO-263): 3.8g
  D3 (TO-268): 4.1g
- **RoHS Compliant**

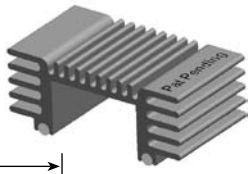

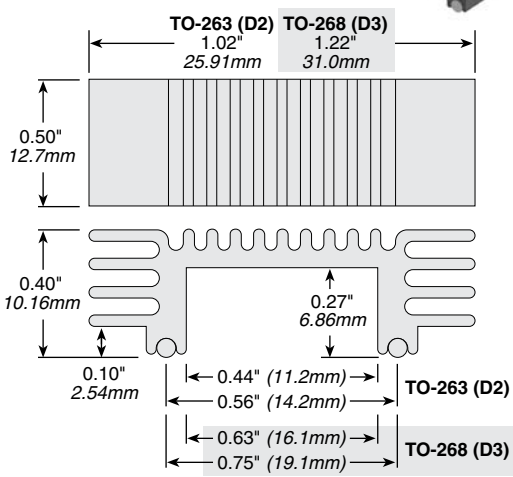

Note: order TO-263 for TO-252 devices

HEAT DISSIPATION

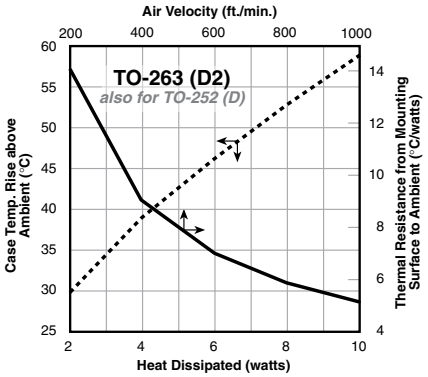

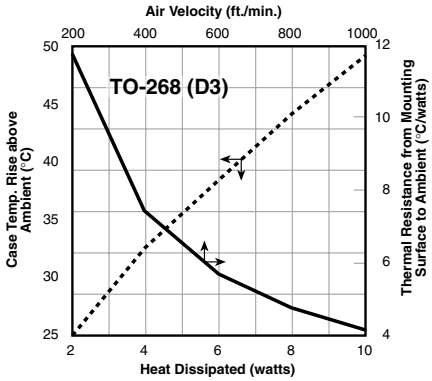

LAND PATTERN

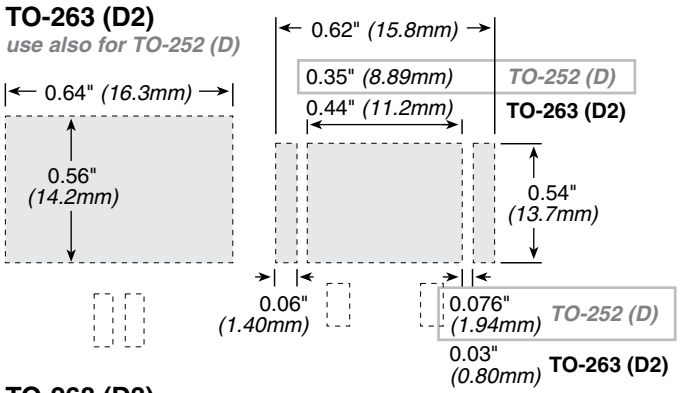

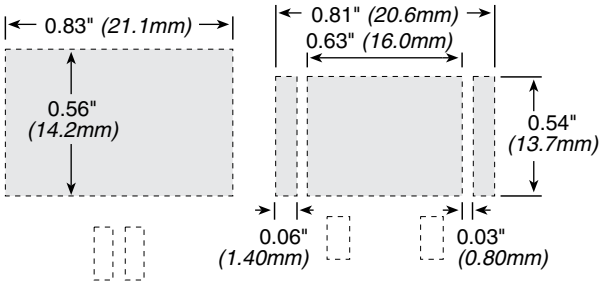

TAPE AND REEL

Pocket depth: 0.41" (10.50mm)

Pocket pitch: 0.79" (20.00mm)

Reel diameter: 13.00" (330.00mm)

250 pcs. per reel

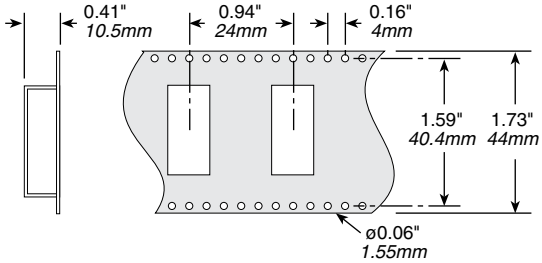

STANDARD PART NUMBERS FOR D SERIES

Part Number	Description	Packaging
DV-T263-101E	for D2 pack, no finish (degreased)	Bulk
DA-T263-101E	for D2 pack, black anodized finish	Bulk
DV-T263-101E-TR	for D2 pack, no finish (degreased)	Reel
DA-T263-101E-TR	for D2 pack, black anodized finish	Reel
DV-T268-101E	for D3 pack, no finish (degreased)	Bulk
DA-T268-101E	for D3 pack, black anodized finish	Bulk
DV-T268-101E-TR	for D3 pack, no finish (degreased)	Reel
DA-T268-101E-TR	for D3 pack, black anodized finish	Reel

Note: order TO-263 for TO-252 devices

E Series Heatsinks

For TO-220 devices

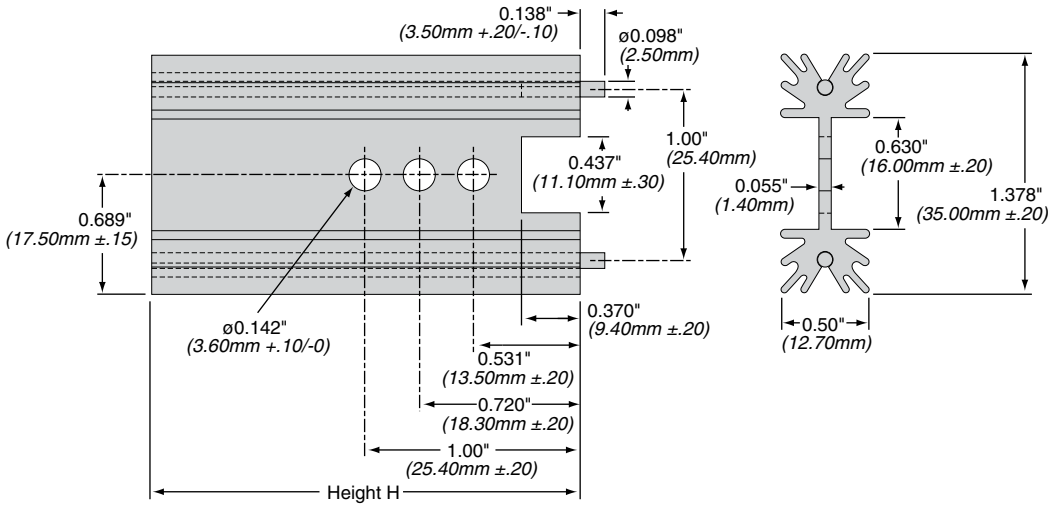

FEATURES

- Vertical through-hole PCB mounting
- 0.142 in. diameter mounting holes (3)

SPECIFICATIONS

Heat sink: Aluminum 6063-T5 or equivalent with either black anodized or degreased finish

Solder feet: Tin plated brass

Interface thermal resistance: for improvement, use thermal joint compound or 0.005 Grafoil (TGon 800 by Laird)

Interface electrical isolation: Sil-Pad 900S by Bergquist or equivalent

Heatsink Part Number	Height (in. ±.010 / *mm ±.25*)	For Package Type	Ohmite Resistor Series	Surface Area (in^2)	Weight	Thermal Resistance* (°C/W)
EV-T220-38E EA-T220-38E	1.5 / *38.10*	TO-220	TBH25, TCH35	11.5	0.63 oz/18g	11.4 9.5
EV-T220-51E EA-T220-51E	2.0 / *50.80*	TO-220	TBH25, TCH35	15.2	0.85 oz/24g	9.0 7.5
EV-T220-64E EA-T220-64E	2.5 / *63.50*	TO-220	TBH25, TCH35	18.8	1.06 oz/30g	7.4 6.2

*Natural convection at 10W dissipation

LAND PATTERN

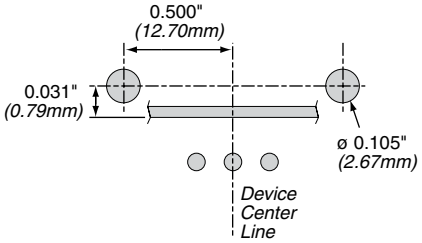

HEAT DISSIPATION

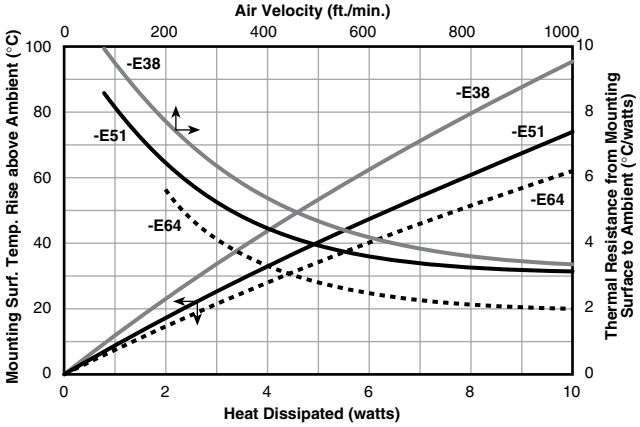

ORDERING INFORMATION

Series — Package type (to be heatsinked) — RoHS Compliant

E V - T 2 2 0 - 5 1 E

Finish: A = black anodized; V = degreased

Height (mm)

STANDARD PART NUMBERS FOR E SERIES

Part Number	Description	Packaging
EV-T220-38E	Heat sink for TO-220, no finish (degreased)	Bulk
EA-T220-38E	Heat sink for TO-220, black anodized	Bulk
EV-T220-51E	Heat sink for TO-220, no finish (degreased)	Bulk
EA-T220-51E	Heat sink for TO-220, black anodized	Bulk
EV-T220-64E	Heat sink for TO-220, no finish (degreased)	Bulk
EA-T220-64E	Heat sink for TO-220, black anodized	Bulk

F and R Series Heatsinks

For TO-218, TO-220 and TO-247 devices

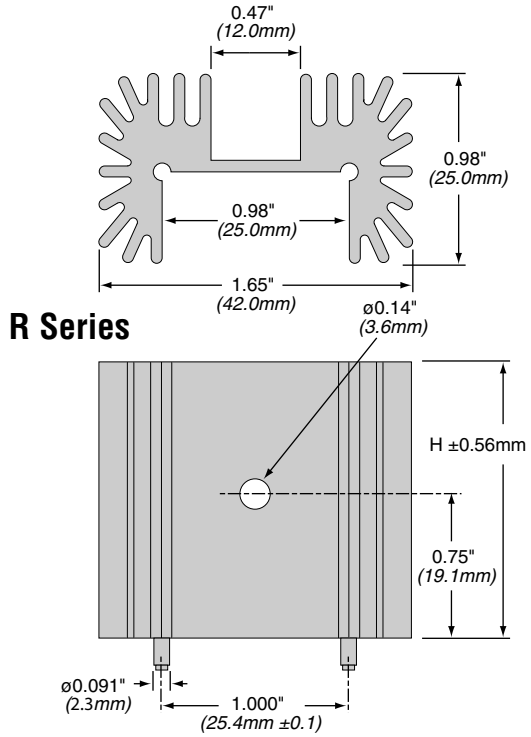

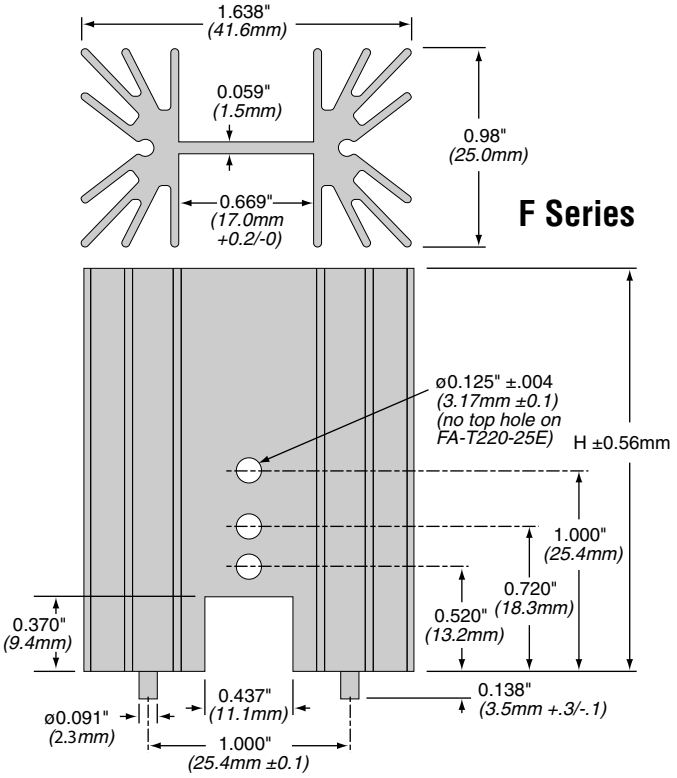

Heatsink Part Number	Height (in. ±.010 / *mm ±.25*)	For Package Type	Ohmite Resistor Series	Surface Area (mm^2)	Weight (g)	Thermal Resistance* (°C/W)
RA-T2X-25E	1.0/25.4	TO-220, -218, -247	TBH25,TCH35, TEH70, TEH100	8,901	25	4.8
RA-T2X-38E	1.5/38.1	TO-220, -218, -247	TBH25,TCH35, TEH70, TEH100	12,983	38	3.9
RA-T2X-51E	2.0/50.8	TO-220, -218, -247	TBH25,TCH35, TEH70, TEH100	17,065	51	3.5
RA-T2X-64E	2.5/63.5	TO-220, -218, -247	TBH25,TCH35, TEH70, TEH100	21,148	63	3.1
FA-T220-25E	1.0 / 25.4	TO-220	TBH25,TCH35	9,285	18	4.7
FA-T220-38E	1.5 / 38.1	TO-220	TBH25,TCH35	13,756	27	3.8
FA-T220-51E	2.0 / 50.8	TO-220	TBH25,TCH35	18,222	37	3.4
FA-T220-64E	2.5 / 63.5	TO-220	TBH25,TCH35	22,814	46	3

*Natural convection

FEATURES

- For vertical mounting with solderable pins
- For TO-220, TO-218, TO-247

SPECIFICATIONS

Finish: Black anodized
Material: 6063-T5 aluminum
Solder: 100% Tin (Sn)
PC board attachement: 0.091" dia. pre-tinned pins.

ORDERING INFORMATION

Series F or R — T2X = R Series, T220 = F Series — **RoHS Compliant**

R A - T 2 X - 2 5 E

Finish A = black anodized, V = degreased — **Height** (mm)

STANDARD PART NUMBERS FOR F AND R SERIES

Part Number	Description	Packaging
RA-T2X-25E	Heat sink for TO-220, TO-218, TO-247, Black Anodized	Bulk
RA-T2X-38E	Heat sink for TO-220, TO-218, TO-247, Black Anodized	Bulk
RA-T2X-51E	Heat sink for TO-220, TO-218, TO-247, Black Anodized	Bulk
RA-T2X-64E	Heat sink for TO-220, TO-218, TO-247, Black Anodized	Bulk
FA-T220-25E	Heat sink for TO-220, Black Anodized	Bulk
FA-T220-38E	Heat sink for TO-220, Black Anodized	Bulk
FA-T220-51E	Heat sink for TO-220, Black Anodized	Bulk
FA-T220-64E	Heat sink for TO-220, Black Anodized	Bulk

HEAT DISSIPATION

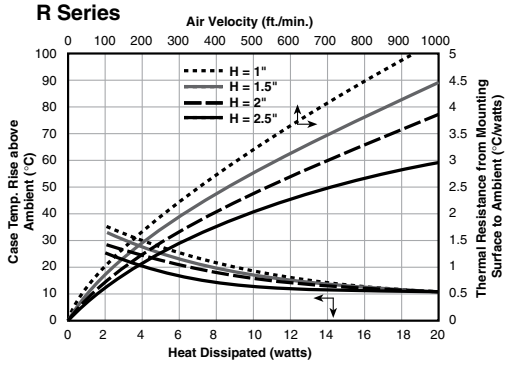

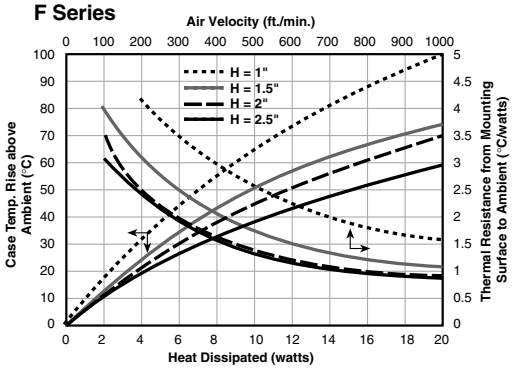

M Series Heatsinks

Heatsink with two clips for TO-264 and TO-247

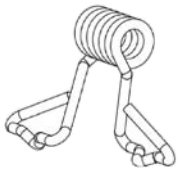

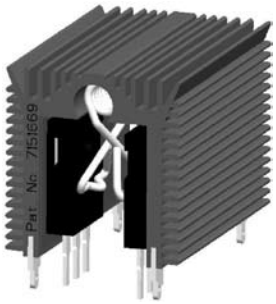

Ohmite introduces the M series, patented (Pat. No. 7,151,669), high performance, low cost, configurable, scalable and compact heat sink with matrix clip system for TO-247 and TO-264 packages. This powerful heat sink provides the easiest assembly, largest surface area and smallest footprint. It is the ideal type of heat sink for high power density and small size (1U or 2U) electronic packaging with forced convection cooling.

SPECIFICATIONS

Heat Sink: Aluminum Alloy 6063-T5 or Equivalent with either degreased or black anodized finish.

Spring Clip: Music Wire, Per ASTM A228 with bright nickel plating

Solder Foot: Cold-rolled Steel, Per ASTM A-366 with pure tin over copper strike. RoHS compliant.

Interface thermal resistance: for improvement, use thermal joint compound or 0.005 Grafoil (TGon 800 by Laird)

Interface electrical isolation: Sil-Pad 900S by Bergquist or equivalent

FEATURES

- **Minimum assembly cost and labor.** Spring Clips make the mounting holes and fasteners obsolete in assembly operations & reduce costs.
- **Maximum Thermal Transfer.** Maximum surface area per unit volume, efficient cooling fins & consistent mounting force reduces thermal resistance
- **Maximum Repeatability.** Constant spring force over repeated assembly/disassembly
- **Maximum Reliability.** Resilient spring action locks electronic component in place. Fewer parts in assembly and no fasteners and washers required. Prevent short circuit by eliminating metal particles generated from hardware or thread tapping
- **Design Flexibility.** Maximum flexibility for dynamic device locations and power up grading. "Configure-to-Fit" & "Scale-to-Meet" options give designers the total freedom to configure the heat sink to fit their packaging designs and to scale the heat sink to meet their power dissipations.

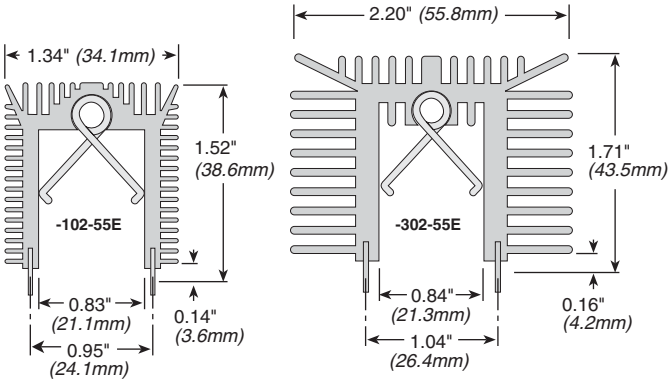

Part No.	Surface Area (in^2/mm^2)	Weight (oz./g)	Thermal Resistance (°c/w)*
MV-102-55E	45 / 29,097	2.2 / 63	6.0
MA-102-55E	45 / 29,097	2.2 / 63	5.2
MV-302-55E	76/49,218	4.7/134	3.6
MA-302-55E	76/49,218	4.7/134	3.0

** R-theta$_{c-a}$ for 18W dissipation total for two devices in natural convection*

LAND PATTERN

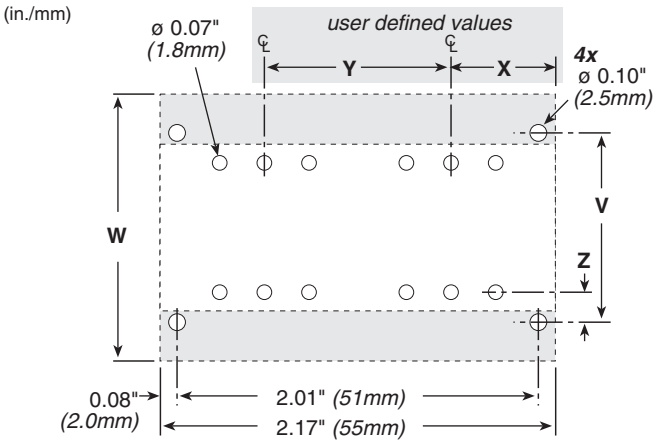

Part Number	W	V	Z*
MV-102-55E MA-102-55E	1.35" / 34.3	0.95" / 24.1	0.18" / 4.6
MV-302-55E MA-302-55E	2.20" / 55.9	1.04" / 26.4	0.21" / 5.3

**Device package dimensions can vary. Customer should verify this dimension.*

HEAT DISSIPATION

For two devices

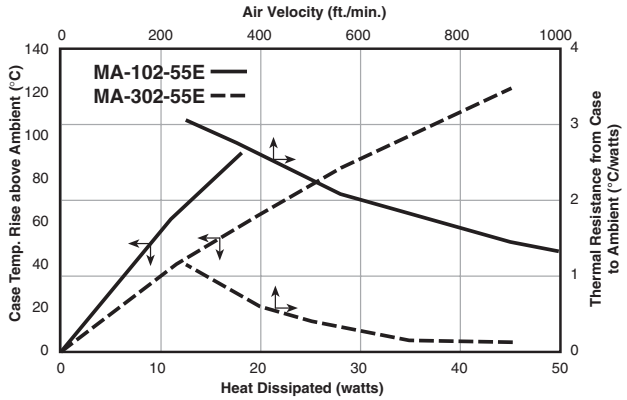

ORDERING INFORMATION

No. of clips — RoHS Compliant

M V - 1 0 2 - 5 5 E

Series — Finish (A = black anodized, V = degreased) — Length (mm)

Check product availability using the Worldwide Inventory Search at ohmite.com

STANDARD PART NUMBERS FOR M SERIES

Part Number	Description	Packaging
MV-102-55E	No finish (degreased)	Bulk
MA-102-55E	Black anodized	Bulk
MV-302-55E	No finish (degreased)	Bulk
MA-302-55E	Black anodized	Bulk

W Series Heatsinks

For TO-220 and TO-247 devices

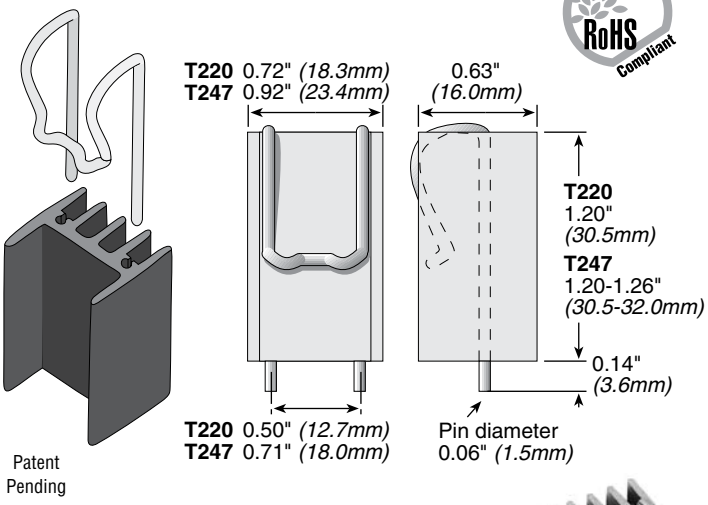

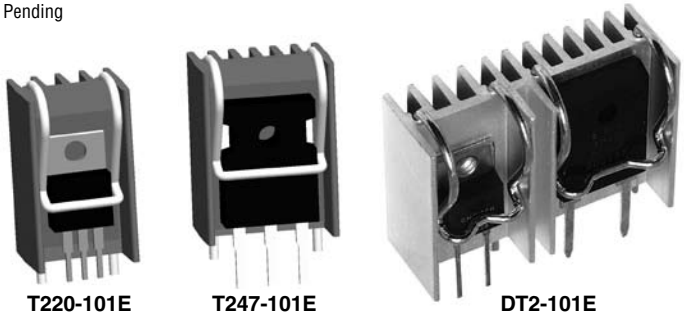

The unique design (patent pending) of the W Series heat sinks combines a tin plated, solderable, integral spring clip with an extruded aluminum heat sink body for an all-in-one solution to through-hole mounting of TO-220 or TO-247 packages. These self-aligning heat sinks feature solderable feet and an integrated clip with 13.2 (lbf) of force on the center of the device to enhance thermal performance.

FEATURES

- **Reduced Assembly Cost:** spring clip and auto-align feature makes fasteners and fixtures obsolete, along with stray metal filings from tapped holes
- **Maximum Repeatability:** clamping force of the spring clip is not degraded by repeated loading and unloading
- **Maximum Heat Transfer per Unit Space:** maximum surface area per unit volume and consistent mounting force reduces thermal resistance
- **Maximum Resistance to Shock and Vibration:** light weight, resilient spring clip locks the component in place and is highly resistant to shock and vibration
- **Maximum Reliability:** helps prevent short circuits by eliminating metal particles from thread tapping
- **RoHS Compliant**

SPECIFICATIONS

Heat Sink: Aluminum alloy 6063-T5 or equivalent.

Spring Clip: Music wire, per ASTM A228

Pin: Solderable 100% tin over copper strike

Interface thermal resistance: for improvement, use thermal joint compound or 0.005 Grafoil (TGon 800 by Laird)

Interface electrical isolation: Sil-Pad 900S by Bergquist or equivalent

Mounting: Vertical thru-hole mount

Clip Force: 13.2 lbf.

Heatsink Part Number	For Package Type	Ohmite Resistor Series	Surface Area (in^2)	Weight	Thermal Resistance*
WA-T220-101E WV-T220-101E	TO-220	TBH25, TCH35	6.5	0.35 oz/10g	R_{S-a}=12°C/W R_{S-a}=13°C/W
WA-T247-101E WV-T247-101E	TO-247	TEH70, TEH100	8.4	0.42 oz/12g	R_{S-a}=11°C/W R_{S-a}=12°C/W
WA-DT2-101E WV-DT2-101E	TO-220 & TO-247	TBH25, TCH35, TEH70, TEH100	15.1	0.79 oz/22g	R_{S-a}=7°C/W R_{S-a}=8°C/W

*Natural convection at 10W heat dissipation

HEAT DISSIPATION

T220-101E and T247-101E

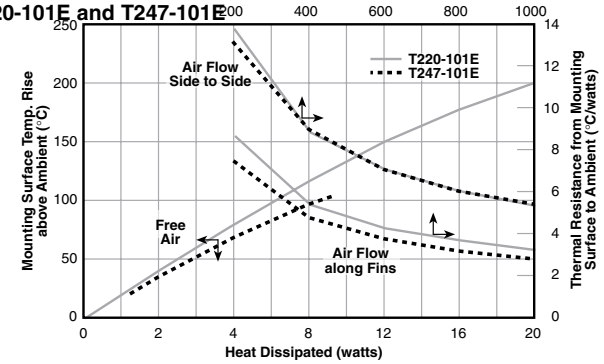

DT2-101E

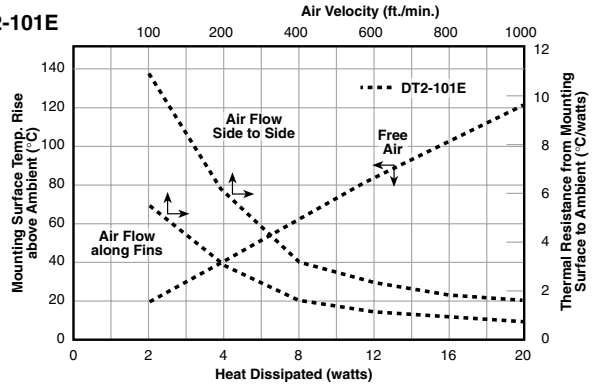

LAND PATTERN

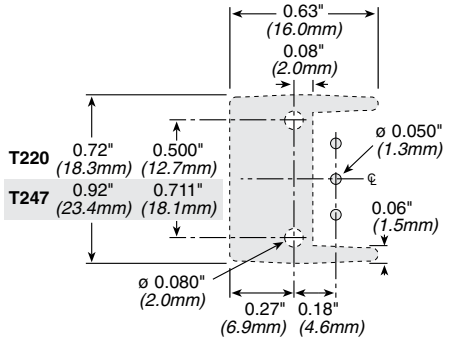

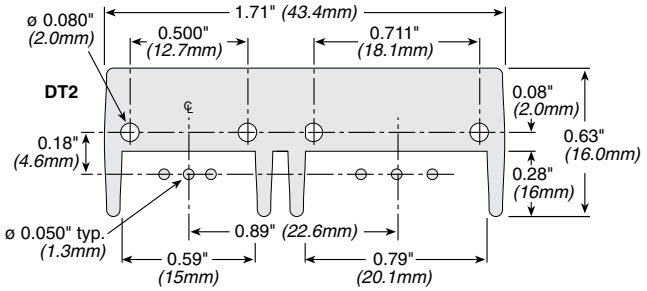

STANDARD PART NUMBERS FOR W SERIES

Part Number	Description	Packaging
WA-T220-101E	Heat sink for TO-220, black anodized	Bulk
WV-T220-101E	Heat sink for TO-220, no finish (degreased)	Bulk
WA-T247-101E	Heat sink for TO-247, black anodized	Bulk
WV-T247-101E	Heat sink for TO-247, no finish (degreased)	Bulk
WA-DT2-101E	Heat sink for TO-247 &TO-220, black anodized	Bulk
WV-DT2-101E	Heat sink for TO-247 &TO-220, no finish (degreased)	Bulk

S Series

LED Heatsinks

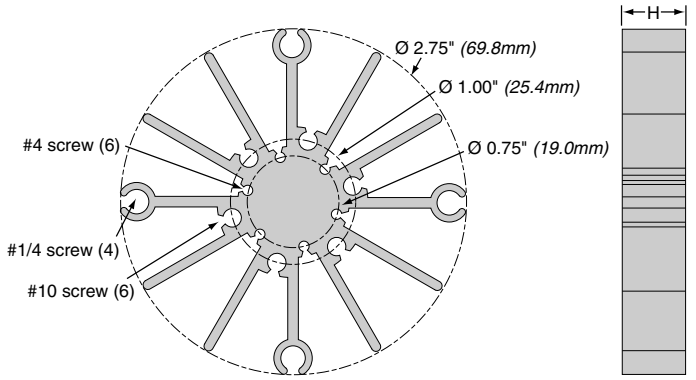

Ohmite S Series LED Heatsinks are low cost and easy assembly heat sinks for "Star" LED packages supplied by Cree, Lumileds, Osram and others. This simple heat sink can hold LED modules and can be mounted simply with some thread forming screws. The heat sink has two types of surface finish and can be used in either natural (free) or forced convection cooling applications.

Heatsink Part Number	H Height (in/*mm*)	Surface Area (in^2/mm^2)	Weight (oz/g)	Thermal Resistance (°C/W) Free conv.	Forced conv.
SV-LED-113E **SA-LED-113E**	0.50 / *12.7*	18 / *11,739*	0.077 / *35*	6.67 5.33	4.33
SV-LED-125E **SA-LED-125E**	1.00 / *25.4*	36 / *23,478*	0.154 / *70*	5.33 4.27	2.88
SV-LED-151E **SA-LED-151E**	2.00 / *50.8*	72 / *46,956*	0.308 / *140*	4.00 3.20	1.89
SV-LED-176E **SA-LED-176E**	3.00 / *76.2*	108 / *70,434*	0.462 / *210*	3.11 2.49	1.55

SPECIFICATIONS

Heat Sink: Aluminum Alloy 6063-T5 or Equivalent with either degreased or black anodized finish.

Mounting Hardware: 1/4, #10, and #4 thread forming SS screws are preferred

Compliance: Either degreased or black anodized finished parts are RoHS compliant.

STANDARD PART NUMBERS FOR S SERIES

Part Number	Description	Packaging
SV-LED-113E SA-LED-113E	12.7mm, no finish (degreased) Black Anodized, 12.7mm	Bulk Bulk
SV-LED-125E SA-LED-125E	25.4mm, no finish (degreased) Black Anodized, 25.4mm	Bulk Bulk
SV-LED-151E SA-LED-151E	50.8mm, no finish (degreased) Black Anodized, 50.8mm	Bulk Bulk
SV-LED-176E SA-LED-176E	76.2mm, no finish (degreased) Black Anodized, 76.2mm	Bulk Bulk

ORDERING INFORMATION

RoHS Compliant

S V - L E D - 1 1 3 E

Series — Coating: A = black anodized, V = degreased — Height

HEAT DISSIPATION

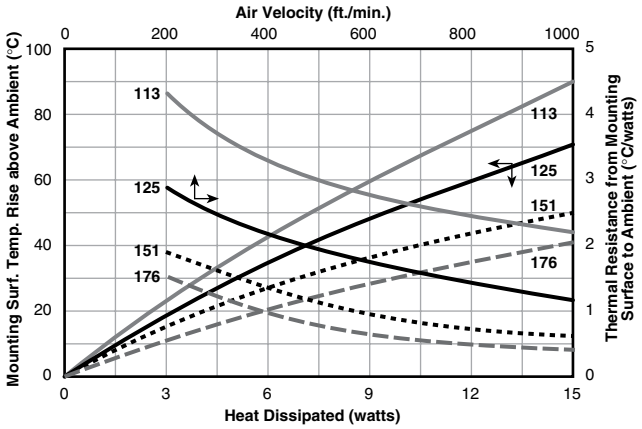

TL Series

Modular Heat Sinkable Thick Film Power

The TL Series add heat sinkable options to the thick film resistor family. The resistor element is packaged with plastic insulators, and quick-connect terminals in a symmetrical aluminum profile for easy heat sink mounting. Special tapped configurations are offered to reduce on board component count.

Efficient thermal packaging provides improved heat conduction to the heat sink. Self-insulating package design increases voltage withstanding characteristics when compared to traditional aluminum housings. The in line mounting profile makes the TL Series easily adaptable to most heat sink systems. Thermal compound is always recommended when heat sinking.

FEATURES

- Very low inductance
- Low profile design
- In-Line Mounting Profile
- 1/4" Quick connect terminals
- Consult factory for common, isolated, or special multiple tap options.

APPLICATIONS

- Semiconductor Balancing
- Frequency Converters
- Snubber
- In-Rush Current Limiter
- Bleeder Resistor
- Power Switching
- Voltage Dividers

SPECIFICATIONS

Material

Resistive Element: Thick Film on Alumina

Housing: Aluminum

Insulators: Glass reinforced high temperature Valox®

Terminals: Tinned brass

Electrical

Power Range: 27 – 275 watts

Resistance Range: 0.3 ohm – 4 megohm

Tolerance: Ultra Power (U Style): ±10% std; Standard Power: ±10% std; 5% and 1% available

Temperature Coefficient: ±250 PPM

Test Voltage for 1 Minute: 6000 VDC/2500 VAC

Working Voltage: 1200 VAC

External Creeping Distance: 12mm

Temperature Limits: -40°C to +125°C

Insulation: >100² Mohm/500V

Air Distance, Terminal to Ground: 7mm

Inductance: 50-100 nH

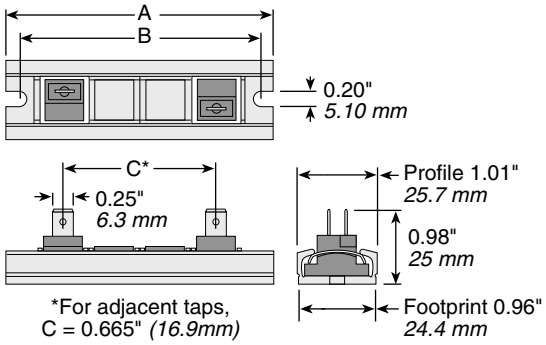

Series	Ultra* Wattage	Std** Wattage	Ohm Range	A (mm)	B (mm)	Operating Voltage VAC	Dielectric Withstanding Voltage VAC
TL54	35	27	0.3 - 1 Meg	54	46	1200	2500
TL71	96	71	1.0 - 2 Meg	71	63	1200	2500
TL88	155	114	1.5 - 3 Meg	88	80	1200	2500
TL104	215	158	2.0 - 4 Meg	104	96	1200	2500
†TL122	275	202	2.0 - 4 Meg	122	114	1200	2500

* For properly heat sinked, untrimmed resistors - see chart
** For properly heat sinked, trimmed resistors - see chart
† Power Ratings are theoretical. Consult Factory for details.

THERMAL RESISTANCE (°C/W)

	TL54	TL71	TL88	TL104
Ultra Power(10% Tolerance)	1.26	0.53	0.34	0.25
Std Power (5% - 3% Tolerance)	1.67	0.70	0.45	0.33

Consult factory for multiple tap options in common, isolated, and special configurations.

ELECTRICAL/MECHANICAL SPECS

Type Values for Standard Resistors			TL54	TL71	TL88	TL104	TL122
Max. Rated Wattage		W	35	96	155	215	275
Nominal Power		W	18	48	78	108	137
Surge Load in 10 sec		W	72	192	312	432	548
Max Voltage Between Terminal		V	1000	2000	2500	2500	2500
Resistance Min		ohm	0.3	1	1.5	2	2
Resistance Max		ohm	1 meg	2 meg	3 meg	4 meg	4 meg
Mechanics:	A	*mm*	*54*	*71*	*88*	*104*	*122*
	B	*mm*	*46*	*63*	*80*	*96*	*114*
	C	*mm*	*16.9*	*33.8*	*50.7*	*67.6*	*84.5*
Weight		g	26	33	44	55	65

ORDERING INFORMATION

E = RoHS compliant

T L 1 0 4 K U R 5 0 0 E

Size	Tolerance	Power	Ohms
TL54 = 54 mm	F = 1%	Blank = standard	R500 = 0.50
TL71 = 71 mm	J = 5%	U = ultra	10R0 = 10.0
TL88 = 88 mm	K = 10%		1K00 = 1,000
TL104 = 104 mm			1M00 = 1,000,000
TL122 = 122 mm			

STANDARD PART NUMBERS FOR TL SERIES

Ohmic value	Part No. Prefix ➤ Suffix ▼	TL54K	TL71K	TL88K	TL104K	TL122K
0.5	R50	✔				
1.0	1R0	✔	✔	✔	✔	
1.5	1R5			✔		
2.0	2R0	✔	✔	✔	✔	✔
3.0	3R0	✔	✔	✔	✔	
4.0	4R0	✔	✔	✔	✔	✔
5.0	5R1	✔	✔	✔	✔	
10.0	10R	✔	✔	✔	✔	✔
15.0	15R	✔	✔	✔	✔	
22.0	22R	✔	✔	✔	✔	✔
47.0	47R	✔	✔	✔	✔	✔
75.0	75R	✔	✔	✔	✔	✔
100.0	100	✔	✔	✔	✔	✔
150.0	150	✔	✔	✔	✔	
220.0	220	✔	✔	✔	✔	✔

Ohmic value	Part No. Prefix ➤ Suffix ▼	TL54K	TL71K	TL88K	TL104K	TL122K
240.0	240	✔	✔	✔	✔	
470.0	470	✔	✔	✔	✔	✔
510.0	510	✔	✔	✔	✔	
750.0	750	✔	✔	✔	✔	✔
1,000.0	1K0	✔	✔	✔	✔	✔
1,100.0	1K1	✔	✔	✔	✔	
2,200.0	2K2	✔	✔	✔	✔	✔
4,700.0	4K7	✤	✤	✤	✤	
5,100.0	5K1	✤	✤	✤	✤	
10,000.0	10K	✤	✤	✤	✤	
22,000.0	22K	✤	✤	✤	✤	
51,000.0	51K	✤	✤	✤	✤	

✔ = Standard values
✤ = Non-standard values subject to minimum handling charge per item

Check product availability at **www.ohmite.com**

TL Series

Modular Heat Sinkable Thick Film Power

MAXIMUM AND NOMINAL POWER RATINGS FOR ULTRA POWER AND STANDARD POWER RESISTORS

TL54

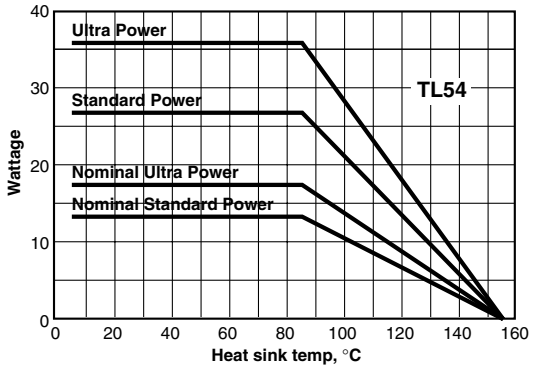

TL104

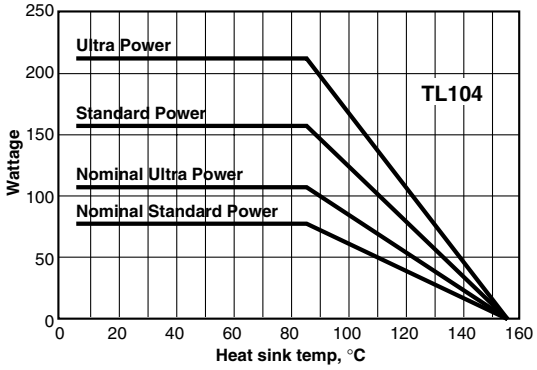

TL71

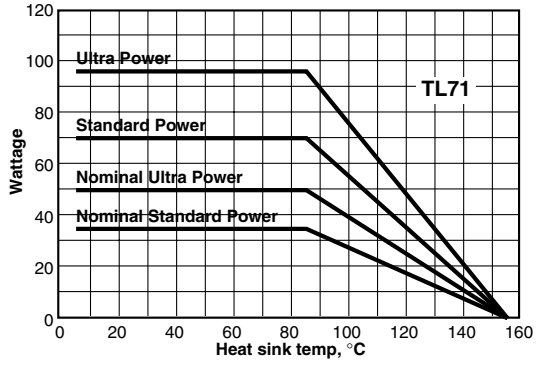

TL122

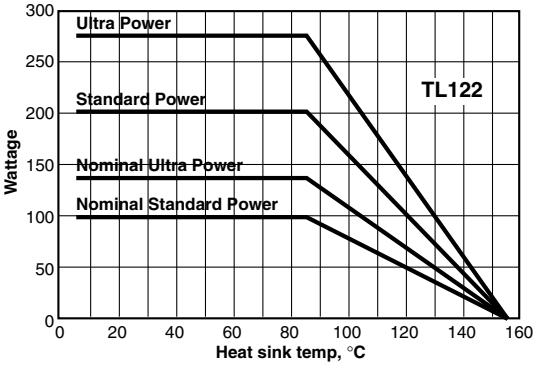

TL88

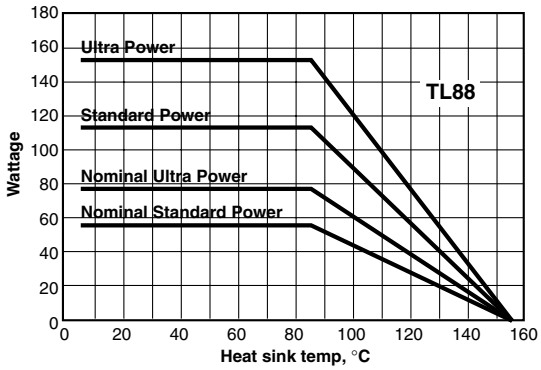

Subscribe to our New Product Bulletin at ohmite.com

TAP600 Series

600 Watt Heat Sinkable Planar

Ohmite's TAP600 delivers 600 watts of reliable power to a variety of power conditioning, power transmission, and power control applications. These resistors can be designed for liquid or air cooled heat sink systems. Applications include variable speed drives, power supplies, robotics, motor control, and other control devices.

FEATURES

- Dielectric Strength up to 12KV
- Special Design for Low Inductance and Capacitance Values
- Contacts allow for easy load connection with M5 screws (not included) available with M4 as special request.
- Encapsulated with a special resin filled epoxy casing with a large creepage distance to mass, large air distance between terminals, and a high insulation resistance (CTI 600).
- Materials meet the requirements of UL94-V0
- High current version available: 0.1 to 0.2 ohms; 10% tol.

SPECIFICATIONS

Electrical

Resistance Values: 0.25Ω to 100KΩ (0.1Ω to <0.25Ω avail. in HC version only)

Resistance Tolerance: ±10% Std., 5% available on request.

Temperature Coefficient: ±150ppm/°C (others upon request)

Maximum Working Voltage: 5,000V DC, higher voltage on request, not exceeding max. power

Power Rating: 600W at 70°C heat sink temperature or 85°C bottom case temperature. This value is only valid by using a thermal conduction to the heat sink R_{th} -cs<0.025°C/W. The value can be reached by using thermal transfer compound with a heat conductivity of 1w/mk. The flatness of the cooling plate must be better than 0.05mm overall. The roughness of the surface should not exceed 6.4µm.

Dielectric Strength Voltage: 6k Vrms, 50Hz, 1min standard; up to 12k Vrms available

Single Shot Voltage: Up to 12KV Normwave (1.5/50 µsec)

Insulation Resistance: 10GΩ min. at 500V

Creeping Distance: 42mm min.

Air Distance: 14mm min.

Inductance: ≤80nH

Capacitance/Mass: ≤110pF

Capacitance/Parallel: ≤40pF

Operation Temperature: -55°C to +150°C

Max. Torque for Contacts: 2 Nm

Max. Torque for Mounting: 1.8 Nm

Derating (thermal resist.): 8.73W/°C (0.115°C/W)

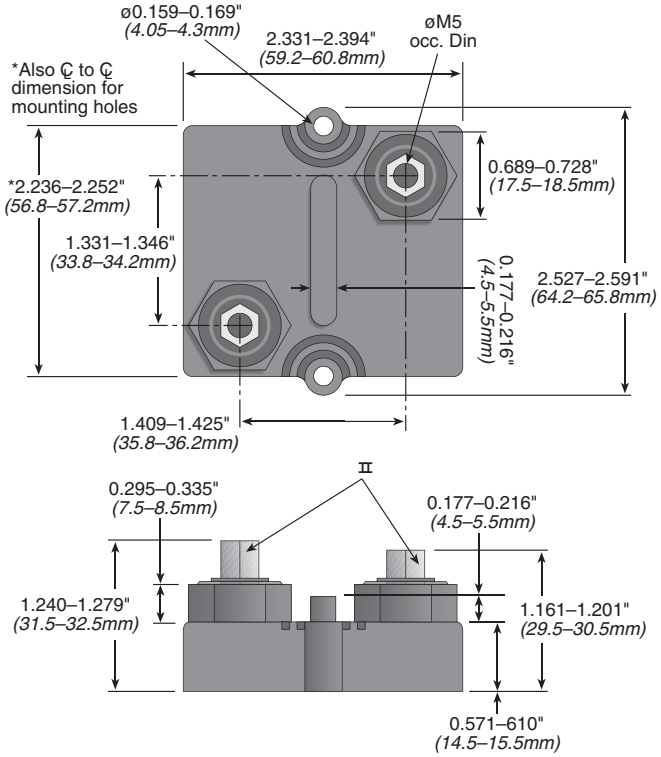

PERFORMANCE DATA

Test	Method	Typical Results - ΔR
Short Time Overload	1000 W/10 Sec. @ 70°C	0.4%
Humidity Steady State	56 Days/40°C/ 95°C	0.25%
Temp. Cycling	-55/+125/5 Cycles	0.20%
Shock	40g/4,000 Times	0.25%
Vibrations	2 - 500Hz/10g	0.25%
Load Life 1,000 Cycles	Pn 30 min. ON/30 min. OFF	0.40%
Terminal Strength of Contacts	200N	0.05%

DERATING CURVE

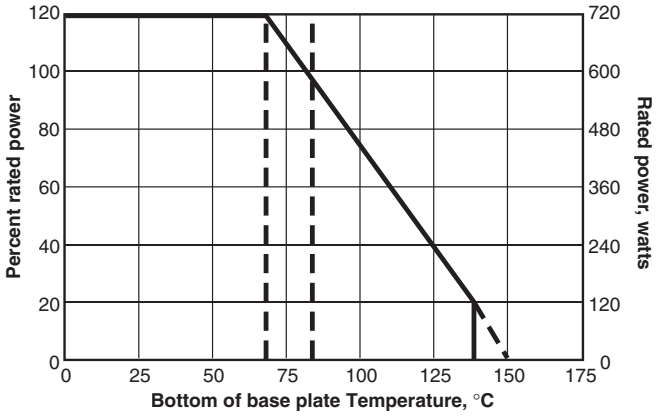

ORDERING INFORMATION

High Current *10% tol. only*

RoHS compliant Non-compliant version unavailable

TAP600HCK5R0E

Style

Tolerance
J = 5%
K = 10%, Std.
L = 20%

Resistance
1 Ohm = 1R0
10 Ohm = 10R
1000 Ohm = 1K0

Check product availability at **www.ohmite.com**

STANDARD VALUES FOR TAP600 SERIES

0.10*	1.0	15	500
0.20*	2.0	30	1000
0.25	3.0	50	2500
0.33	4.0	75	3000
0.50	5.0	100	5000
	10	300	10,000

**available only in HC version*

TAP800 Series

800 Watt Heat Sinkable Planar

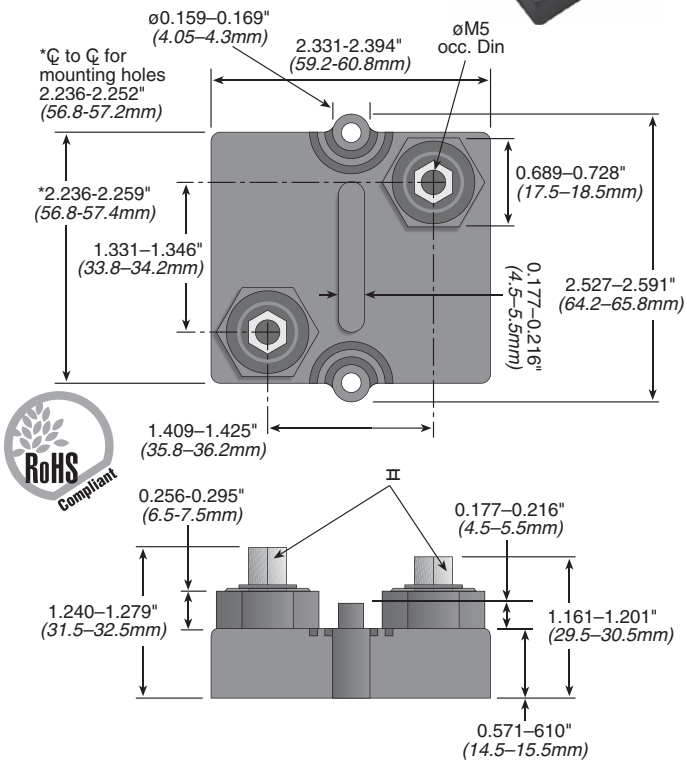

Ohmite's TAP800 Series dissipates 800 watts of power when used with a liquid or air cooled heat sink system. The TAP800 rounds out 600 watt (TAP600) and 1000 watt (TAP1000) product offerings. Applications include variable speed drives, power supplies, robotics, motor control, control devices, and other power designs.

FEATURES

- Electric support is high alumina content ceramic metallized on the bottom for ideal heat transfer and optimum discharge.
- Encapsulated with a special resin filled epoxy casing with a large creepage distance to mass, large air distance between terminals, and a high insulation resistance (CTI 600).
- Resistive element is specially designed for low inductance and capacitance. The element provides stable performance in addition to high wattage and pulse loading capability.
- Contacts allow for easy load connection with M5 screws (not included) available with M4 as special request.
- Materials meet the requirements of UL94-V0
- High current version available: 0.1 to 0.25 ohms; 10% tol.

SPECIFICATIONS

Electrical

Resistance Values: 0.25Ω to 10KΩ (0.1Ω to <0.25Ω avail. in HC version only)

- **Resistance Tolerance:** ±5% to ±10%
- **Temperature Coefficient:** ±150ppm/°C (others upon request)
- **Maximum Working Voltage:** 5,000V DC, higher voltage on request, not exceeding max. power
- **Short Time Overload:** 1,200W at 70°C for 10sec., ΔR=0.4% max.
- **Power Rating:** 800W at 85°C Bottom case temperature.
- **Peak Current:** up to 1500 amp. depending on pulse length and frequency Please ask for details
- **Electric Strength Voltage:** 6kVrms, 50Hz,upto 12kVrms on special request.
- **Single Shot Voltage:** up to 12kV Normwave (1.5/50 µsec)
- **Partial Discharge:**4KVrms, <10pC, up to 7kV on special request; not available in high-current
- **Insulation Resistance:** 10GΩ min. at 500V
- **Creeping Distance:** 42mm min.
- **Air Distance:** 14mm min.
- **Inductance:** 80nH
- **Capacity/Mass:** 110pF
- **Capacity/Parallel:** 40pF
- **Operation Temperature:** -55°C to +150°C
- **Max. Torque for Contacts:** 2 Nm
- **Max. Torque for Mounting:** 1.8 Nm M4 screws (not included)

Derating: 8.73W/°K (0.115°K/W)

Power Rating: 800W at 85°C bottom case temp. This value is only valid by using a thermal conduction to the heatsink R_{th}-cs<0.025°K/W. This value can be reached by using thermal transfer compound with a heat conductivity of 1W/mK. The flatness of the cooling plate must be better than 0.05mm overall. The roughness of the surface should not exceed 6.4µm.

PERFORMANCE DATA

Test	Method	Typical Results - ΔR
Short time overload	1,000 W/10sec	0.4%
Humidity Steady State	56 days/40°C/95%	0.25%
Temp. Cycling	-55/+125/5 cycles	0.20%
Shock	40g/4,000 times	0.25%
Vibration	2-500Hz/10g	0.25%
Load Life	Pn 30 min. on/30 min off, 1,000cyl	0.40%
Terminal Strength	200N	0.05%

DERATING CURVE

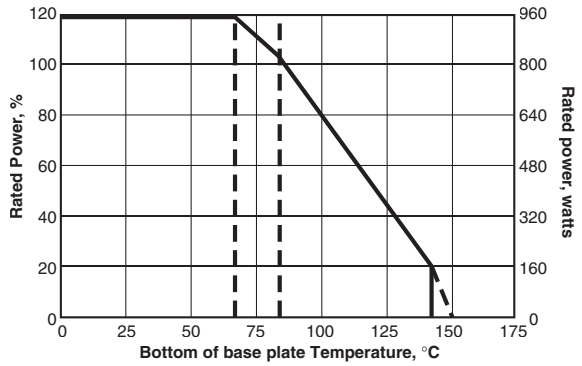

STANDARD VALUES

0.10*	1.0	100	1000
0.25	5.0	220	2700
0.33	10	390	3000
0.50	15	500	5000
	50	680	10,000

**available only in HC version*

ORDERING INFORMATION

High Current (10% tol. only) — RoHS compliant: Non-compliant version unavailable

TAP800HCK5R0E

- Style: TAP
- Wattage: 800 (800 watts)
- Tolerance: J = 5%; K = 10%, Std.; L = 20%
- Resistance: 1 Ohm = 1R0; 10 Ohm = 10R; 1000 Ohm = 1K0

Check product availability at **www.ohmite.com**

TAP1000 and 2000

1000 & 2000 Watt Heat Sinkable Planar

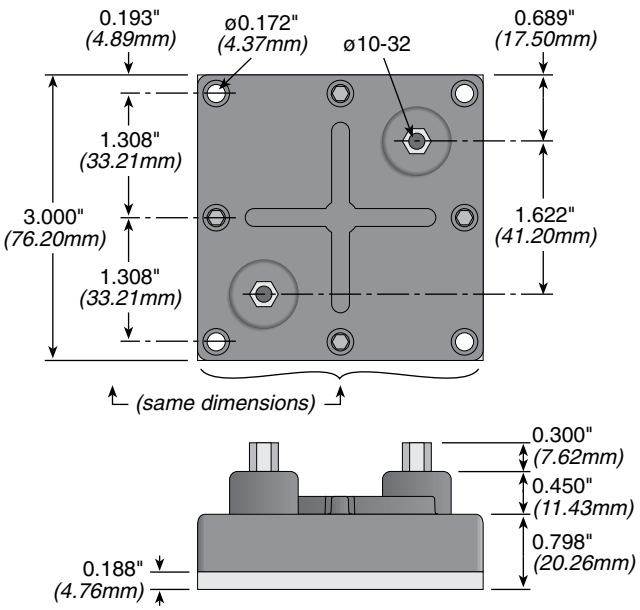

The TAP series delivers 1000W or 2000W of continuous power when properly mounted to a liquid cooled heat sink (based on 85°C mounting plate temperature)

Applications include power conditioning, power distribution, power conversion, and power control.

FEATURES

- High Energy Rating
- Low Inductance
- Resistor Element Electrically Isolated
- High Dielectric Strength
- Small Footprint

APPLICATIONS

- Power semiconductor balancing
- Motor control
- Inrush Current Limiting

DERATING CURVE

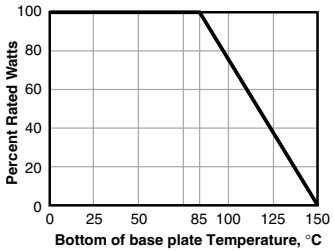

SPECIFICATIONS

Material

Resistor Element: Thick Film on Alumina Substrate

Electrical

Power Rating: 1000W or 2000W at 85°C mounting plate

Resistance Values: 0.5Ω to 1000Ω

Resistance Tolerance: +10% std.

Max Operating Voltage: 2000VDC

Temperature Coefficient: ± 250 PPM/°C

Dielectric Strength: 6KV standard

Operating Temperature Range: -55°C to 85°C

Case

Terminal Screws: #10-32

Max Contacts Torque: 10 in-lb

Mounting Screws: #8-32

Max Mounting Torque: 15 in-lb

Creepage Distance: 50mm ± 1mm (min)

PERFORMANCE DATA

Test	Rating	
	Continuous	Pulse
Rated Power, max. current and heat sink plate temperature limited	(TA1K0) 1000W (TA2K0) 2000W	
Operating Voltage	$\sqrt{P*R}$	N/A
Max. Applied Voltage, ohms law limited	223V	2000VDC
Max. Current	10A	53.33A
Critical Resistance; below this resistance max power has to be de-rated due to exceeding max current	(TA1K0) 10Ω (TA2K0) 20Ω	

Test	Method	Maximum ΔR
Short Time Overload	1.14 x $\sqrt{P*R}$ / 10 sec @ 70°C	Max % ΔR_{sto} = ±(2% + 0.05Ω)
Moisture Resistance	(TA1K0) 1000 hrs @ 40°C, 90-95% RH (TA2K0) 1750 hrs @ 40°C, 90-95% RH	≤1% ≤1%
Thermal Shock	MIL-STD-202, Method 107	MIL-STD-202, Method 107
Vibration, elec.	MIL-STD-202, Method 201	±2% Resistance
Vibration, mech.	MIL-STD-202, Method 201	No Loose Terminal Screws
Load Life	(TA1K0) 1000 Hrs 90 min ON / 30 min OFF (TA2K0) 1750 Hrs 90 min ON / 30 min OFF	≤1% ≤1%
Pulse Tolerance 20,000 Pulses	52µF @ 2KV / 60 sec intervals, 104J	≤1%
Dielectric Strength	6KVDC for 1 minute	≤1%

APPLICATION NOTES

Proper heat sinking techniques are essential to performance of a TAP resistor. Pleased follow these guidelines when designing TAP system:

- Heats sink plate (base plate of the resistor) temperature must be monitored to establish proper de-rating. Best technique is to attach a thermocouple to the side of the base plate of the resistor. Temperature of plastic housing or heat sink cannot be used to establish rating of the resistor. Usage of laser thermometers should be avoided.
- To obtain a power rating of 1000W or 2000W, the bottom case temp must not exceed 85°C. This can only be achieved if the thermal conduction to the heatsink R_{th}-cs<0.025°K/W. This value can be reached by using thermal transfer compound with a heat conductivity of 1W/mK. The flatness of the cooling plate must be better than 0.05mm overall. The roughness of the surface should not exceed 6.4µm.
- Due to very high power density, only liquid cooled heat sinks are recommended for applications when >300W power rating is desired.
- Properly designed heat sink should have more than 2 cooling pipes under the surface of the TAP resistor. The Hydroblok, a 4 pass aluminum heat sink (http://www.ohmite.com/ta1k0-sink.html) is an example of properly designed heat sink.

ORDERING INFORMATION

RoHS Compliant

TA1K0PH2R50KE

Style	Wattage	Package Type	Resistance	Tolerance
			2.5Ω = 2R50 50Ω = 50R0	K = 10% (standard) L = 20%

Check product availability at **www.ohmite.com**

STANDARD PART NUMBERS FOR TAP SERIES

Ohms	1000 Watt 10% Tolerance	Ohms	2000 Watt 10% Tolerance
0.5	TA1K0PHR500KE	0.5	TA2K0PHR500KE
1	TA1K0PH1R00KE	1	TA2K0PH1R00KE
2.5	TA1K0PH2R50KE	2.5	TA2K0PH2R50KE
5	TA1K0PH5R00KE	5	TA2K0PH5R00KE
7.5	TA1K0PH7R50KE	7.5	TA2K0PH7R50KE
10	TA1K0PH10R0KE	10	TA2K0PH10R0KE
15	TA1K0PH15R0KE	15	TA2K0PH15R0KE
25	TA1K0PH25R0KE	25	TA2K0PH25R0KE
50	TA1K0PH50R0KE	50	TA2K0PH50R0KE
100	TA1K0PH100RKE	100	TA2K0PH100RKE
250	TA1K0PH250RKE	250	TA2K0PH250RKE
500	TA1K0PH500RKE	500	TA2K0PH500RKE
750	TA1K0PH750RKE	750	TA2K0PH750RKE
1000	TA1K0PH1K00KE	1000	TA2K0PH1K00KE

TFS Series

Surge Capable
Thick Film Non Inductive

The TFS Series has been specifically developed to absorb large amounts of energy by efficient use of its compact mass. Ideal for medical surge protection applications, these thick film reisistors offer non-inductive performance in an axial package.

Uses include power supply conversion, electron microscopes, X-ray systems, high-resolution CRT displays, and geophysical instrument related products.

FEATURES

- Appropriate for medical surge protection applications
- Ideal to replace standard carbon composition resistors
- Custom dimensions, values, tolerances and characteristics available
- For energy rating information, visit www.ohmite.com

SPECIFICATIONS

Material

Resistive Element: Thick Film

Encapsulation: Screen Printed Glass

Electrical

Resistance Value: 100Ω up to 100KΩ

Temperature Coefficient: 100ppm/°C

Tolerance: 1%, 2%, 5%, 10%

Operating Temperature: -55°C to +200°C

Test: VDE 0750 (Pulse Duration 10 msec)

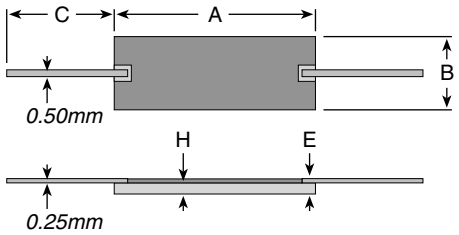

Type	U (KV)	Energy* (J)	Power (W)	Dimensions (mm) A	B	C	H	E
TFSA	3	6	0.5	9	5.5	10	0.7	1.1
TFSB	3.5	9	0.5	11	5.5	10	0.7	1.1
TFSC	4	11	0.75	13	5.5	10	0.7	1.1
TFSD	7	33	1	21	8	10	0.9	1.3
TFSE	7	44	1.5	21	10.5	10	0.9	1.3
TFSF	11	55	2	26	10.5	10	0.9	1.3

*Published energy rating is for 10ms pulse. For shorter pulses energy rating has to be derated according to Max. Individual Pulse Rating chart (left) and Single Pulse Energy Rating considerations (see ohmite.com).

MAXIMUM INDIVIDUAL PULSE RATING

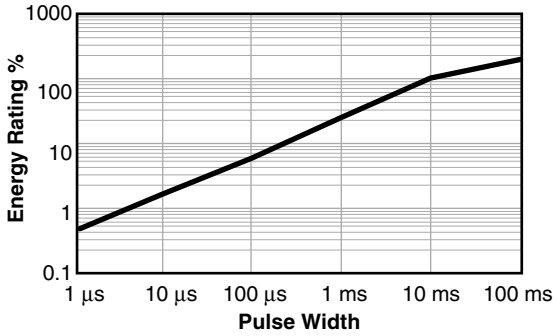

ORDERING INFORMATION

RoHS Compliant

T F S A 1 0 0 K J E

Series	Energy Rating joules	Ohm Value	Tolerance
	A = 6 D = 33	Example:	F = 1%
	B = 9 E = 44	100R = 100Ω	G = 2%
	C = 11 F = 55	2K40 = 2400Ω	J = 5%
			K = 10%

NOTES

- Momentary overload capability is 5 times rated power for 1 second or 2 times rated power for 5 seconds. Always verify designs with pulse and surge conditions through thorough testing of the design at maximum operating temperature and maximum pulse loading (or some margin above maximum pulse loading).
- Damage to the resistor by excessive pulse loading is generally indicated by an increasing resistance of the resistor.
- Energy ratings are based on single pulses (at least 1 minute between pulses).
- For multiple pulse applications the energy pulse rating should be reduced and the average power should not exceed the nominal power rating of the selected model.

Our friendly Customer Service team can be reached at 866-9-OHMITE

STANDARD PART NUMBERS FOR TFS SERIES

Ohms	Tol.	6 Joules 0.5 Watts	9 Joules 0.5 Watts	11 Joules 0.75 Watts	33 Joules 1 Watts	44 Joules 1.5 Watts	55 Joules 2 Watts
100	1%	TFSA100RFE					
100	5%		TFSB100RJE		TFSD100RJE		TFSF100RJE
220	1%	TFSA220RFE					
270	5%	TFSA270RJE		TFSC270RJE	TFSD270RJE		TFSF270RJE
470	1%	TFSA470RFE					
470	5%		TFSB470RJE			TFSE470RJE	
680	5%	TFSA680RJE		TFSC680RJE		TFSE680RJE	TFSF680RJE
750	5%		TFSB750RJE		TFSD750RJE		TFSF750RJE
1,000	1%	TFSA1K00FE					
1,000	5%	TFSA1K00JE	TFSB1K00JE	TFSC1K00JE	TFSD1K00JE	TFSE1K00JE	TFSF1K00JE
1,500	5%	TFSA1K50JE		TFSC1K50JE	TFSD1K50JE		TFSF1K50JE
2,200	1%	TFSA2K20FE					
2,700	5%		TFSB2K70JE			TFSE2K70JE	
4,700	1%	TFSA4K70FE					
4,700	5%	TFSA4K70JE		TFSC4K70JE	TFSD4K70JE		
4,990	1%	TFSA4K99FE					
5,000	5%	TFSA75K0JE					
6,800	5%		TFSB6K80JE			TFSE6K80JE	
10,000	1%	TFSA10K0FE					
10,000	5%	TFSA10K0JE	TFSB10K0JE	TFSC10K0JE	TFSD10K0JE		TFSF10K0JE
16,000	5%						TFSF16K0JE
20,000	1%	TFSA20K0FE					TFSF20K0JE
20,000	5%		TFSB20K0JE		TFSD20K0JE		
22,000	1%	TFSA22K0FE					
27,000	5%	TFSA27K0JE		TFSC27K0JE		TFSE27K0JE	
47,000	1%	TFSA47K0FE					
50,000	5%	TFSA50K0JE					TFSF51K0JE
51,000	5%		TFSB51K0JE	TFSC51K0JE	TFSD51K0JE		
75,000	5%					TFSE75K0JE	
100,000	1%	TFSA100KFE					
100,000	5%		TFSB100KJE	TFSC100KJE	TFSD100KJE		TFSF100KJE

Check product availability at **www.ohmite.com**

Slim-Mox

Precision Thick Film Planar

Ohmite's Slim-Mox provides stable performance for a wide range of resistance values, with voltage ratings up to 25K. Low temperature coefficients are available for high stability circuit applications. The space-saving planar package offers and alternative to traditional high voltage resistors.

APPLICATIONS

- HV power supplies
- Medical instrumentation
- Current pulse limiters
- Ionization chambers

FEATURES

- High dielectric & low outgassing epoxy coating
- Low resistor noise
- Non inductive
- RoHS compliant
- Radial terminals

SPECIFICATIONS

Material

Resistor Element: Thick film on Alumina
Coating: Epoxy or Silicone
Terminals: RoHS solder composition is 96% Sn, 3.5% Ag, 0.5% Cu

Electrical

Resistance Range: 100 Ohms to 5,000M
Power Rating: 0.25W to 5.5W
Voltage Rating: 1.5KV to 25KV
Tolerance: 0.5% to 20%; not all tolerances available in all values
Operating Temperature: -55°C to +110°C
Temperature Coefficient: See table on page 72

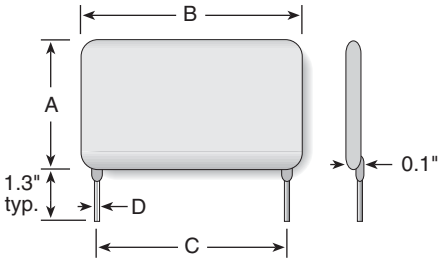

Ohmite Series	Resistance Range (Ohms)	Power @25°C	Max. Operating Voltage	A max. (in/*mm*)	B max. (in/*mm*)	C ±0.025 (in/*mm*)	D ±0.002 (in/*mm*)	Capacitance (pf)
SLIM-MOX100	100Ω to 500M	0.25W	1.5KV	0.30" / *7.62*	0.30" / *7.62*	0.10" / *2.54*	0.025" / *0.635*	1.00
SLIM-MOX101	100Ω to 1,000M	0.50W	2.0KV	0.34" / *8.64*	0.33" / *8.38*	0.20" / *5.08*	0.025" / *0.635*	1.00
SLIM-MOX102	200Ω to 5,000M	1.00W	5.0KV	0.34" / *8.64*	0.58" / *14.73*	0.40" / *10.16*	0.032" / *0.813*	0.90
SLIM-MOX103	250Ω to 5,000M	1.25W	7.5KV	0.34" / *8.64*	0.83" / *21.08*	0.60" / *15.24*	0.032" / *0.813*	0.75
SLIM-MOX104	500Ω to 5,000M	1.50W	10.0KV	0.34" / *8.64*	1.08" / *27.43*	0.90" / *22.86*	0.032" / *0.813*	0.70
SLIM-MOX106	750Ω to 5,000M	2.00W	15.0KV	0.34" / *8.64*	1.58" / *40.13*	1.40" / *35.56*	0.032" / *0.813*	0.65
SLIM-MOX108	1K to 5,000M	2.50W	20.0KV	0.34" / *8.64*	2.08" / *52.83*	1.90" / *48.26*	0.032" / *0.813*	0.60
SLIM-MOX202	500Ω to 5,000M	1.50W	5.0KV	0.59" / *14.99*	0.58" / *14.73*	0.40" / *10.16*	0.032" / *0.813*	1.10
SLIM-MOX204	1K to 5,000M	2.00W	10.0KV	0.59" / *14.99*	1.08" / *27.43*	0.90" / *22.86*	0.032" / *0.813*	0.80
SLIM-MOX206	2K to 5,000M	2.50W	15.0KV	0.59" / *14.99*	1.58" / *40.13*	1.40" / *35.56*	0.032" / *0.813*	0.75
SLIM-MOX208	2K to 5,000M	3.00W	20.0KV	0.59" / *14.99*	2.08" / *52.83*	1.90" / *48.26*	0.032" / *0.813*	0.65
SLIM-MOX210	3K to 5,000M	3.50W	25.0KV	0.59" / *14.99*	2.58" / *65.53*	2.40" / *60.96*	0.032" / *0.813*	0.60
SLIM-MOX306	3K to 5,000M	3.50W	15.0KV	0.84" / *21.34*	1.58" / *40.13*	1.40" / *35.56*	0.032" / *0.813*	0.75
SLIM-MOX308	4K to 5,000M	4.00W	20.0KV	0.84" / *21.34*	2.08" / *52.83*	1.90" / *48.26*	0.032" / *0.813*	0.50
SLIM-MOX310	5K to 5,000M	4.50W	25.0KV	0.84" / *21.34*	2.58" / *65.53*	2.40" / *60.96*	0.032" / *0.813*	0.40
SLIM-MOX404	3K to 5,000M	3.00W	10.0KV	1.09" / *27.69*	1.08" / *27.43*	0.90" / *22.86*	0.032" / *0.813*	1.00
SLIM-MOX408	5K to 5,000M	5.00W	20.0KV	1.09" / *27.69*	2.08" / *52.83*	1.90" / *48.26*	0.032" / *0.813*	0.80
SLIM-MOX410	5K to 5,000M	5.50W	25.0KV	1.09" / *27.69*	2.58" / *65.53*	2.40" / *60.96*	0.032" / *0.813*	0.50

Contact Ohmite for custom configurations. *Maximum voltage and power rating determined by Ohm's law: $P=V^2/R$

Slim-Mox Divider

Precision Thick Film Voltage

Multiple taps are provided on the Slim-Mox RD for use in advanced circuit designs. Tight ratio tolerances make these resistors ideal for precision applications requiring consistent performance.

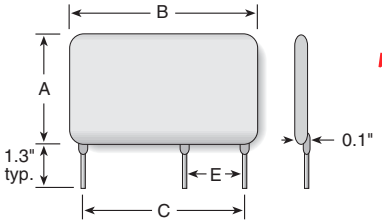

FEATURES

- Custom configurations are available. Contact Ohmite with your specifications
- RoHS compliant

SPECIFICATIONS

Material

Resistor: Thick film on Alumina

Electrical

Ratio tolerances: 0.5% to 5%
Temp. coefficient tracking: TCR tracking to 10ppm and VCR tracking to 1ppm

A complete description of the SLIM-MOX Divider is required. EXAMPLE:
R_T = 500MΩ 5%
R_1 = 499.5MΩ 5%
R_2 = 500KΩ 1%
Ratio = R_T / R_2 = 1,000: 1, 1%
To specify Slim-Mox Dividers, please see our website at:
www.ohmite.com/dividers

Ohmite Series	Resistance Range (Ohms)	Power @25°C	Max. Operating Voltage	Maximum Ratio	C ±.025	E ±.025
SLIM-MOX103RD	1M to 5,000M	0.75W	5.0KV	5,000 : 1	0.60"/ 15.24	0.20"/ 5.08
SLIM-MOX104RD	1M to 5,000M	1.00W	10.0KV	5,000 : 1	0.90"/ 22.86	0.20"/ 5.08
SLIM-MOX106RD	1M to 5,000M	1.50W	12.0KV	5,000 : 1	1.40"/ 35.56	0.20"/ 5.08
SLIM-MOX108RD	1M to 5,000M	2.00W	15.0KV	5,000 : 1	1.90"/ *48.26*	0.60"/ 15.24
SLIM-MOX204RD	1M to 5,000M	1.50W	10.0KV	5,000 : 1	0.90"/ 22.86	0.20"/ 5.08
SLIM-MOX206RD	1M to 5,000M	2.00W	12.0KV	5,000 : 1	1.40"/ 35.56	0.20"/ 5.08
SLIM-MOX208RD	1M to 5,000M	2.50W	20.0KV	5,000 : 1	1.90"/ 48.26	0.40"/ 10.16
SLIM-MOX210RD	1M to 5,000M	3.00W	25.0KV	5,000 : 1	2.40"/ 60.96	0.20"/ 5.08
SLIM-MOX306RD	1M to 5,000M	3.00W	12.0KV	5,000 : 1	1.40"/ 35.56	0.30"/ 7.62
SLIM-MOX308RD	1M to 5,000M	3.50W	20.0KV	5,000 : 1	1.90"/ 48.26	0.30"/ 7.62
SLIM-MOX310RD	1M to 5,000M	4.00W	25.0KV	5,000 : 1	2.40"/ 60.96	0.20"/ 5.08
SLIM-MOX408RD	1M to 5,000M	4.50W	20.0KV	5,000 : 1	1.90"/ 48.26	0.30"/ 7.62
SLIM-MOX410RD	1M to 5,000M	5.00W	25.0KV	5,000 : 1	2.40"/ 60.96	0.20"/ 5.08

Contact Ohmite for custom configurations.

Slim-Mox HT

High Temperature Thick Film Precision

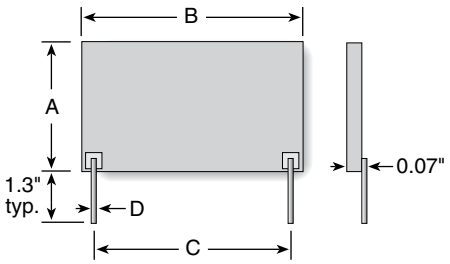

The Slim-Mox HT provides a higher power rating for high ambient temperature environments. Appropriate for mounting near heat generating components. The Slim-Mox HT is finished with a rugged silicone coating suitable for most environments.

FEATURES

- Outstanding voltage coefficient
- High temperature silicone coating
- Low resistor noise
- Noninductive
- Custom configurations are available. Contact Ohmite with your specifications
- RoHS compliant
- Radial Terminals

APPLICATIONS

- HV power supplies
- Medical instrumentation
- Current pulse limiters
- Ionization chambers

SPECIFICATIONS

Material

Resistor Element: Thick film on Alumina

Coating: Silicone

Electrical

Resistance Range: 100Ω to 5,000M

Power Rating: 0.25W to 9.0W

Voltage Rating: 1.5KV to 25KV

Tolerance: 0.5% to 20%

Operating Temperature: -55°C to +180°C

Ohmite Series	Resistance Range (Ohms)	Power @25°C	Voltage Rating	A max. (in/*mm*)	B max. (in/*mm*)	C ±0.025 (in/*mm*)	D ±0.002 (in/*mm*)
SLIM-MOX100	100Ω to 500M	0.40W	1.5KV	0.20" / *5.08*	0.20" / *5.08*	0.10" / *2.54*	0.025" / *0.635*
SLIM-MOX101	100Ω to 1,000M	0.75W	2.0KV	0.25" / *6.35*	0.25" / *6.35*	0.20" / *5.08*	0.025" / *0.635*
SLIM-MOX102	200Ω to 5,000M	1.50W	5.0KV	0.25" / *6.35*	0.50" / *12.70*	0.40" / *10.16*	0.032" / *0.813*
SLIM-MOX103	250Ω to 5,000M	2.00W	7.5KV	0.25" / *6.35*	0.75" / *19.05*	0.60" / *15.24*	0.032" / *0.813*
SLIM-MOX104	500Ω to 5,000M	2.50W	10.0KV	0.25" / *6.35*	1.00" / *25.40*	0.90" / *22.86*	0.032" / *0.813*
SLIM-MOX106	750Ω to 5,000M	3.25W	15.0KV	0.25" / *6.35*	1.50" / *38.10*	1.40" / *35.56*	0.032" / *0.813*
SLIM-MOX108	1K to 5,000M	4.25W	20.0KV	0.25" / *6.35*	2.00" / *50.80*	1.90" / *48.26*	0.032" / *0.813*
SLIM-MOX202	500Ω to 5,000M	2.50W	5.0KV	0.50" / *12.70*	0.50" / *12.70*	0.40" / *10.16*	0.032" / *0.813*
SLIM-MOX204	1K to 5,000M	3.25W	10.0KV	0.50" / *12.70*	1.00" / *38.10*	0.90" / *22.86*	0.032" / *0.813*
SLIM-MOX206	2K to 5,000M	4.25W	15.0KV	0.50" / *12.70*	1.50" / *38.10*	1.40" / *35.56*	0.032" / *0.813*
SLIM-MOX208	2K to 5,000M	5.00W	20.0KV	0.50" / *12.70*	2.00" / *50.80*	1.90" / *48.26*	0.032" / *0.813*
SLIM-MOX210	3K to 5,000M	5.75W	25.0KV	0.50" / *12.70*	2.50" / *63.50*	2.40" / *60.96*	0.032" / *0.813*
SLIM-MOX306	3K to 5,000M	5.50W	15.0KV	0.75" / *19.05*	1.50" / *38.10*	1.40" / *35.56*	0.032" / *0.813*
SLIM-MOX308	4K to 5,000M	6.75W	20.0KV	0.75" / *19.05*	2.00" / *50.80*	1.90" / *48.26*	0.032" / *0.813*
SLIM-MOX310	5K to 5,000M	7.50W	25.0KV	0.75" / *19.05*	2.50" / *63.50*	2.40" / *60.96*	0.032" / *0.813*
SLIM-MOX404	3K to 5,000M	5.00W	10.0KV	1.00" / *25.40*	1.00" / *25.40*	0.90" / *22.86*	0.032" / *0.813*
SLIM-MOX408	5K to 5,000M	8.25W	20.0KV	1.00" / *25.40*	2.00" / *50.80*	1.90" / *48.26*	0.032" / *0.813*
SLIM-MOX410	5K to 5,000M	9.00W	25.0KV	1.00" / *25.40*	2.50" / *63.50*	2.40" / *60.96*	0.032" / *0.813*

Contact Ohmite for custom configurations.

Slim-Mox HT Divider

High Temperature Thick Film Voltage Divider

A complete description of the SLIM-MOX Divider is required. EXAMPLE:

R_T = 500MΩ 5%
R_1 = 499.5MΩ 5%
R_2 = 500KΩ 1%
Ratio = R_T / R_2 = 1,000: 1, 1%

To specify Slim-Mox Dividers, please see our website at:

www.ohmite.com/dividers

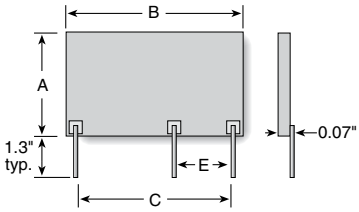

Slim-Mox HT RD resistor dividers complete the Slim-Mox family with the high temperature divider configuration. These resistors are useful wherever multiple voltage drops are needed in a circuit. Designed to customer specifications, the Slim-Mox HT RD resistor utilizes our thick film on alumina technology to offer flexible termination schemes.

FEATURES

- High Temperature Operation
- RoHS compliant
- Radial Terminals

SPECIFICATIONS

Material

Resistor: Thick film on Alumina

Electrical

- **Ratio tolerances:** 0.5% to 5%
- **Temp. coefficient tracking:** TCR tracking to 10ppm and VCR tracking to 1ppm
- Custom ratios and terminal configurations are available. Contact your Tech. Sales Rep with your specification.

Ohmite Series	Resistance Range (Ohms)	Power @25°C	Voltage Rating	Maximum Ratio	C ±0.025 (in/*mm*)	E ±0.025 (in/*mm*)
SLIM-MOX103RD	1M to 5,000M	1.25W	5.0KV	5,000 : 1	0.60" / *15.24*	0.20" / *5.08*
SLIM-MOX104RD	1M to 5,000M	1.50W	10.0KV	5,000 : 1	0.90" / *22.86*	0.20" / *5.08*
SLIM-MOX106RD	1M to 5,000M	2.50W	12.0KV	5,000 : 1	1.40" / *35.56*	0.20" / *5.08*
SLIM-MOX108RD	1M to 5,000M	3.25W	15.0KV	5,000 : 1	0.90" / *22.86*	0.60" / *15.24*
SLIM-MOX204RD	1M to 5,000M	2.50W	10.0KV	5,000 : 1	0.90" / *22.86*	0.20" / *5.08*
SLIM-MOX206RD	1M to 5,000M	3.25W	12.0KV	5,000 : 1	1.40" / *35.56*	0.20" / *5.08*
SLIM-MOX208RD	1M to 5,000M	4.25W	20.0KV	5,000 : 1	1.90" / *48.26*	0.40" / *10.16*
SLIM-MOX210RD	1M to 5,000M	5.00W	25.0KV	5,000 : 1	2.40" / *60.96*	0.20" / *5.08*
SLIM-MOX306RD	1M to 5,000M	4.50W	12.0KV	5,000 : 1	1.40" / *35.56*	0.30" / *7.62*
SLIM-MOX308RD	1M to 5,000M	5.00W	20.0KV	5,000 : 1	1.90" / *48.26*	0.30" / *7.62*
SLIM-MOX310RD	1M to 5,000M	5.75W	25.0KV	5,000 : 1	2.40" / *60.96*	0.20" / *5.08*
SLIM-MOX408RD	1M to 5,000M	6.75W	20.0KV	5,000 : 1	1.90" / *48.26*	0.30" / *7.62*
SLIM-MOX410RD	1M to 5,000M	7.50W	25.0KV	5,000 : 1	2.40" / *60.96*	0.20" / *5.08*

Contact Ohmite for custom configurations.

Temperature/Voltage Coefficients of Resistance
Performance Characteristics
Temperature Derating

DERATING

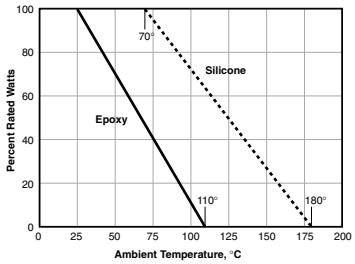

TEMPERATURE/VOLTAGE COEFFICIENTS OF RESISTANCE

Resistor Series	Temp. Coeff. of Resistance* 0°C-85°C 25 PPM/°C	85°C and above 50 PPM/°C	85°C and above 100 PPM/°C	Voltage Coeff. of Resistance** < 2PPM/Volt	Voltage Coeff. of Resistance** < 5PPM/Volt
SLIM-MOX100	100 to 300M	100Ω to 50M	51M to 500M	100Ω to 140M	141M to 500M
SLIM-MOX101	100 to 800M	100Ω to 100M	101M to 1,000M	100Ω to 270M	271M to 1,000M
SLIM-MOX102	200 to 1,500M	200Ω to 250M	251M to 5,000M	200Ω to 640M	641M to 5,000M
SLIM-MOX103	250 to 800M	250Ω to 440M	441M to 5,000M	250Ω to 1,100M	1,101M to 5,000M
SLIM-MOX104	500 to 2,500M	500Ω to 450M	451M to 5,000M	500Ω to 1,100M	1,101M to 5,000M
SLIM-MOX106	750 to 5,000M	750Ω to 675M	676M to 5,000M	750Ω to 1,600M	1,601M to 5,000M
SLIM-MOX108	1K to 2,500M	1K to 375M	376M to 5,000M	1K to 940M	941M to 5,000M
SLIM-MOX202	500 to 1,500M	500Ω to 200M	201M to 5,000M	500Ω to 520M	521M to 5,000M
SLIM-MOX204	1K to 1,750M	1K to 375M	376M to 5,000M	1K to 950M	951M to 5,000M
SLIM-MOX206	2K to 4,500M	2K to 600M	601M to 5,000M	2K to 1,500M	1,501M to 5,000M
SLIM-MOX208	2K to 5,000M	2K to 1,000M	1,001M to 5,000M	2K to 2,500M	2,501M to 5,000M
SLIM-MOX210	3K to 5,000M	3K to 1,000M	1,001M to 5,000M	3K to 2,600M	2,601M to 5,000M
SLIM-MOX306	3K to 5,000M	3K to 1,000M	1,001M to 5,000M	3K to 2,600M	2,601M to 5,000M
SLIM-MOX308	4K to 5,000M	4K to 1,200M	1,201M to 5,000M	4K to 3,000M	3,001M to 5,000M
SLIM-MOX310	5K to 5,000M	5K to 1,500M	1,501M to 5,000M	5K to 4,000M	4,001M to 5,000M
SLIM-MOX404	3K to 5,000M	3K to 1,100M	1,101M to 5,000M	3K to 2,800M	2,801M to 5,000M
SLIM-MOX408	5K to 5,000M	5K to 1,250M	1,251M to 5,000M	5K to 3,000M	3,001M to 5,000M
SLIM-MOX410	5K to 5,000M	5K to 1,200M	1,201M to 5,000M	5K to 3,000M	3,001M to 5,000M
SLIM-MOX103RD	1M to 800M	1M to 70M	71M to 5,000M	1M to 185M	186M to 5,000M
SLIM-MOX104RD	1M to 2,500M	1M to 275M	276M to 5,000M	1M to 720M	721M to 5,000M
SLIM-MOX106RD	1M to 5,000M	1M to 250M	251M to 5,000M	1M to 640M	641M to 5,000M
SLIM-MOX108RD	1M to 2,500M	1M to 350M	351M to 5,000M	1M to 875M	876M to 5,000M
SLIM-MOX204RD	1M to 1,750M	1M to 300M	301M to 5,000M	1M to 750M	751M to 5,000M
SLIM-MOX206RD	1M to 4,500M	1M to 1,750M	1,751M to 5,000M	1M to 4,500M	4,501M to 5,000M
SLIM-MOX208RD	1M to 5,000M	1M to 625M	626M to 5,000M	1M to 1,550M	1,551M to 5,000M
SLIM-MOX210RD	1M to 5,000M	1M to 950M	951M to 5,000M	1M to 2,400M	2,401M to 5,000M
SLIM-MOX306RD	1M to 5,000M	1M to 800M	801M to 5,000M	1M to 2,000M	2,001M to 5,000M
SLIM-MOX308RD	1M to 5,000M	1M to 1,200M	1,201M to 5,000M	1M to 2,600M	2,601M to 5,000M
SLIM-MOX310RD	1M to 5,000M	1M to 1,000M	1,001M to 5,000M	1M to 3,900M	3,901M to 5,000M
SLIM-MOX408RD	1M to 5,000M	1M to 1,600M	1,601M to 5,000M	1M to 4,000M	4,001M to 5,000M
SLIM-MOX410RD	1M to 5,000M	1M to 1,200M	1,201M to 5,000M	1M to 3,000M	3,001M to 5,000M

*Epoxy operating temp.: -55° to 110°C; Silicone operating temp.: -55° to 180°C
**VC's of <2PPM/Volt are available. Contact Ohmite with your requirement.

PERFORMANCE DATA

Characteristic	Test Method	Specification
Humidity	MIL-STD-202, Method 103B, Condition B	±0.25%
Dielectric Withstanding Voltage	MIL-STD-202, Method 301, 750V	±0.25%
Insulation Resistance	MIL-STD-202, Method 302, Condition A or B	>10,000M or greater dry
Thermal Shock	MIL-STD-202, Method 107G, Condition B, B-1, or F	±0.20%
Load Life	MIL-STD-202, Method 108A, Condition D	±1.0%
Resistance to Solvents	MIL-STD-202, Method 215G	No degradation of coating or marking
Terminal Strength	MIL-STD-202, Method 211A, Condition A or B	±0.25%
Shock (Specified Pulse)	MIL-STD-202, Method 213B, Condition I	±0.25%
Vibration, High Frequency	MIL-STD-202, Method 204D, Condition D	±.020%
Power Conditioning	MIL-R-49462A, Par 4.8	±0.50%
Solderability	MIL-STD-202, Method 208F	>95% Coverage

ORDERING INFORMATION

Coating
2 = Blue silicone (high temp.)
3 = Epoxy (standard)
6 = No coating

Style
100 to 410

RoHS Compliant

S M 1 0 2 0 3 1 0 0 6 F E

Slim Mox Series

Terminal
0 = 0.032" std. (for SM102 - 410)
0 = 0.025" std. (SM100 and 101)

Ohms
First 3 digits are significant; 4th digit is multiplier (# of zeroes to follow). Examples:
1000 = 100Ω
1503 = 150,000Ω
5005 = 50,000,000Ω

Tolerance
D = 0.5%
F = 1%
G = 2%
J = 5%
K = 10%
M = 15%
P = 20%

To specify Slim-Mox **Dividers,** please see our website at: **www.ohmite.com/dividers**

Check product availability at **www.ohmite.com**

Super Mox Series

High Voltage

Uncoated resistor element pictured for demonstration purposes only.
Finished product is coated with silicone.

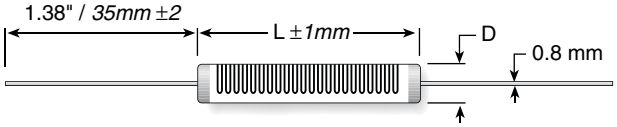

Series	Power Rating (W)	Max. Oper. Voltage	Res. Range (Ω)	Max. VCR*	Dimensions (in./*mm*) L	D
MOX910	3.80	15,000	1K-500M 500M-5G	0.40 0.75	1.07/*27.00*	0.32/*8.00*
MOX920	5.00	21,000	1K-1G 1G-10G	0.20 0.40	1.46/*37.00*	0.32/*8.00*
MOX930	7.50	30,000	1K-1G5 1G5-15G	0.15 0.30	2.05/*52.00*	0.32/*8.00*
MOX940	10.00	45,000	1K-2G5 2G5-25G	0.10 0.15	3.03/*77.00*	0.32/*8.00*
MOX950	13.50	60,000	1K-3G 3G-30G	0.08 0.12	4.02/*102.00*	0.33/*8.30*
MOX960	16.00	72,000	1K-4G 4G-40G	0.06 0.10	4.80/*122.00*	0.34/*8.50*
MOX970	20.00	90,000	1K-5G 5G-50G	0.04 0.08	5.98/*152.00*	0.34/*8.50*

* typical values, contact factory for details

ORDERING INFORMATION

Coating
2 = conformal silicone standard
3 = conformal silicone high temp. with 350°C burn in

E = RoHS compliant

M O X 9 1 0 2 1 0 0 6 J T E

Super Mox Series
see chart for wattage

***Extremely tight tolerances not available across the full resistance range. Consult factory.**

Ohms
First 3 digits are significant; 4th digit is multiplier (# of zeroes to follow). Examples:
1001 = 1000Ω
1503 = 150,000Ω
1006 = 100 MΩ

Tolerance*
A = 0.05%
B = 0.10%
C = 0.25%
D = 0.5%
F = 1%
G = 2%
J = 5%
K = 10%

TCR
T = 100ppm
V = 50ppm
W = 25ppm
X = 15ppm
Y = 10ppm

High-voltage Super Mox resistors have been developed to meet the precision temperature stability requirements of high-accuracy and high-voltage systems. Super Mox combines proprietary non-inductive resistance system and design to achieve low temperature coefficient, low voltage coefficients, high stability and increased high operating voltages. These resistors are designed to meet the demanding requirements of high voltage power supplies, electron microscopes, X-ray systems, high resolution CRT displays and geophysical instruments.

SPECIFICATIONS

Resistance Range: from 1KΩ to 50GΩ on all models (contact Ohmite for 51G to 1TΩ)
Tolerances: 0.05%, 0.1%, 0.25%, 0.5%, 1%, 2%, 5%, 10% (0.05% avail. to 10G, 0.25% to 100G, other on request)
Temperature Coefficients: 5, 10, 15, 25, 50 and 100ppm/°C (10ppm/°C available to 10G, 25ppm/°C to 100G, other on request
Encapsulation: Silicone Conformal Coating
Terminal Material: Gold Plated
Core Material: Al_2O_3 (96%)
Resistor Material: Ruthenium Oxide
Operating Temperature: -55°C to 225°C (extended temperature range to 350°C available)

DERATING

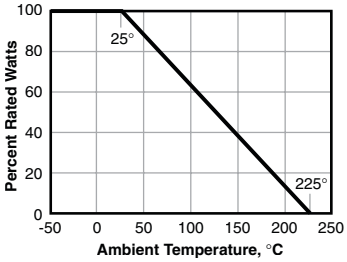

PERFORMANCE DATA

Insulation Resistance	>10,000 MΩ	500 Volt 25 °C 75% relative humidity
Dielectric Strength	>1,000 Volt	25 °C 75% relative humidity
Thermal Shock	Δ R/R < 0.1% typ., 0.20% max.	MIL Std. 202, method 107 Cond. C (IEC 68 -2 -14)
Overload	Δ R/R < 0.1% typ., 0.25% max.	1,5 x Pnom, 5 sec (do not exceed max. voltage)
Moisture Resistance	Δ R/R < 0.1% typ., 0.25% max.	MIL Std. 202, method 106 (IEC 68 -2 -3)
Load Life	Δ R/R < 0.1% typ., 0.25% max.	1000 hours at rated power (IEC 115 -1)

STANDARD PART NUMBERS

Part Number	Watts	Ohms 1% tol.	TCR
MOX91021004FVE	3.8W	1M	50ppm
MOX91025004FVE	3.8W	5M	50ppm
MOX91021005FVE	3.8W	10M	50ppm
MOX91022505FTE	3.8W	25M	100ppm
MOX92021005FVE	5W	10M	50ppm
MOX92025005FVE	5W	50M	50ppm
MOX92021006FVE	5W	100M	50ppm
MOX92021007FTE	5W	1000M	100ppm
MOX93021004FVE	7.5W	1M	50ppm
MOX93025004FVE	7.5W	5M	50ppm
MOX93021005FVE	7.5W	10M	50ppm
MOX93022505FTE	7.5W	25M	100ppm
MOX94021005FVE	10W	10M	50ppm
MOX94025005FVE	10W	50M	50ppm
MOX94021006FVE	10W	100M	50ppm
MOX94021007FTE	10W	1000M	100ppm
MOX95021004FVE	13.5W	1M	50ppm
MOX95025004FVE	13.5W	5M	50ppm
MOX95021005FVE	13.5W	10M	50ppm
MOX95022505FTE	13.5W	25M	100ppm
MOX96021005FVE	16W	10M	50ppm
MOX96025005FVE	16W	50M	50ppm
MOX96021006FVE	16W	100M	50ppm
MOX96021007FTE	16W	1000M	100ppm
MOX97021004FVE	20W	1M	50ppm
MOX97025004FVE	20W	5M	50ppm
MOX97021005FVE	20W	10M	50ppm
MOX97022505FTE	20W	25M	100ppm

Check product availability at **www.ohmite.com**

Mini-Mox

0.25 Watt and 0.5 Watt Precision Thick Film Axial Terminal High Voltage/High Resistance

The Mini-Mox resistor is very versatile, covering a wide resistance range as well as a wide range of operating voltages. Provided with tolerances down to 1%, the Mini-Mox resistor works well in precision circuits.

FEATURES

- RoHS compliant
- Wide resistance ranges
- Epoxy coating
- Metal oxide resistive element

APPLICATIONS

- Avionics
- Medical electronics
- High gain feedback applications
- Current pulse limiters
- Vacuum and space application

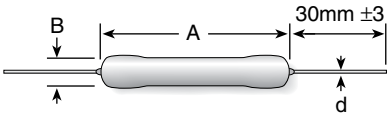

SPECIFICATIONS

Material
Resistor: Metal Oxide
Coating: Epoxy
Core: Alumina
Terminals: Solder-coated axial. RoHS solder composition is 96% Sn, 3.5% Ag, 0.5% Cu

Electrical
Resistance Range: 100K to 1,500MΩ
Power Rating: 0.25W to 0.5W
Voltage Rating: 500V to 1,000V
Tolerance: 0.1% to 20%
Operating Temperature: -55°C to +155°C
Max. Overload Voltage: 1,000V (MOX200) 1,500V (MOX300)
Max. Pulse Voltage: 1,500V (MOX200) 3,000V (MOX300)

Ohmite Series	Resistance Range (Ohms)	Power @25°C	Voltage Rating	Available Tolerances*	A max. (in/*mm*)	B ±0.5mm (in/*mm*)	d ±0.05mm (in/*mm*)
MOX200	100K to 1,500M	0.25W	500V	0.1% to 20%	0.26" / *6.5*	0.09" / *2.2*	0.02" / *0.6*
MOX300	100K to 2,500M	0.50W	1,000V	0.1% to 20%	0.35" / *9*	0.13" / *3.3*	0.03" / *0.65*

*Some tolerances are not available over the entire resistance range.

STANDARD TEMP. COEFFICIENT OF RESISTANCE

Series	100 PPM/°C	200 PPM/°C	300 PPM/°C
MOX200	100K-100MΩ	101M-1000MΩ	1001M-1500MΩ
MOX300	100K-100MΩ	101M-1000MΩ	1001M-2500MΩ

AVAILABLE TOLERANCES

Tolerance	Maximum Value Available MOX200	MOX300
0.10%	10MΩ	10MΩ
0.25%	20MΩ	20MΩ
0.50%	30MΩ	30MΩ
1%-20%	1500MΩ	2500MΩ

DERATING

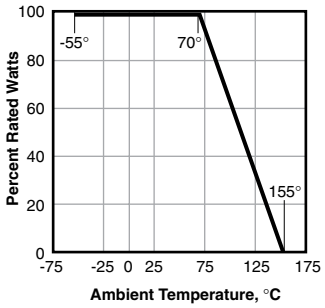

PERFORMANCE DATA

Characteristic	Test Method	Specification
Short time overload	Rated Power x2.5, 5 sec.	±0.5% max.
Resistance to soldering heat	260°C ±5°C, 10 ±1 sec.	±0.5% max.
Temperature cycling	-55°C/+155°C, 5 cycles	±0.5% max.
Withstanding voltage	500 VDC, 60 ±10 sec.	±0.5% max.
Insulation resistance	500 VDC	10,000MΩ or more
Moisture resistance	40°C ±2°C, 90-95%RH, 1000 hr.	±1.5% max.
Load life	70°C ±3°C, 1000 hr.	±2% max.

Check product availability using the Worldwide Inventory Search at ohmite.com

ORDERING INFORMATION

RoHS Compliant — **Tape and reel** 2500 qty./reel std.

M O X 2 0 0 0 0 1 0 0 3 F E R

Mini Mox Series
MOX-20000 or MOX-30000

Ohms
First 3 digits are significant; 4th digit is multiplier (# of zeroes to follow). Examples:
10R2 = 10.2 ohms
1000 = 100 ohms
1503 = 150,000 ohms

Tolerance
B = 0.10%
C = 0.25%
D = 0.5%
F = 1%
G = 2%
J = 5%
K = 10%
M = 15%
P = 20%

Check product availability at **www.ohmite.com**

TAPE AND REEL

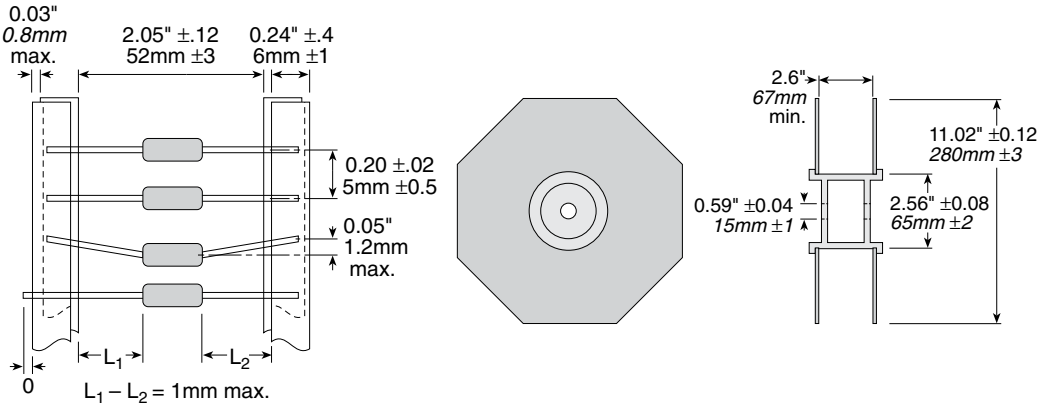

Mini-Mox

Precision Thick Film Axial Terminal High Voltage/High Resistance

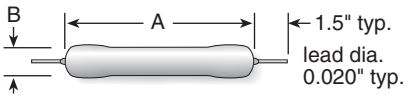

FEATURES

- Wide resistance ranges
- Silicone or epoxy coating
- Metal oxide resistive element

APPLICATIONS

- Avionics
- Medical electronics
- High gain feedback applications
- Current pulse limiters
- Vacuum and space application

The Mini-Mox resistor is very versatile, covering a wide resistance range as well as a wide range of operating voltages. Provided with tolerances down to 0.5%, the Mini-Mox resistor works well in precision circuits.

SPECIFICATIONS

Material
Resistor: Metal Oxide
Coating: Silicone or Epoxy
Core: Alumina
Terminals: Solder-coated axial. RoHS solder composition is 96% Sn, 3.5% Ag, 0.5% Cu

Electrical
Resistance Range: 500Ω to 1 Teraohm
Power Rating: 0.35W to 1.5W
Voltage Rating: 2500V to 7.5KV
Tolerance: 0.5% to 20%; not all tolerances available in all values
Operating Temperature: -55°C to +220°C
Temperature Coefficient: 25ppm/°C 0° to 85°C available

Ohmite Series	Resistance Range (Ohms	Power @70°C	Voltage Rating	Available Tolerances*	A max. (in/*mm*)	B max. (in/*mm*)	Capacitance (pf)
• High-temperature (silicone coated)							
MOX-400-22	500Ω to 300,000M	0.35W	2,500V	1% to 20%	0.510" / *12.95*	0.140" / *3.56*	1.00
MOX-750-22	750Ω to 600,000M	0.70W	5,000V	1% to 20%	0.820" / *20.83*	0.140" / *3.56*	0.75
MOX1125-22	1K to 1,000,000M	1.40W	7,500V	1% to 20%	1.210" / *30.73*	0.140" / *3.56*	0.25
*Some tolerances are not available over the entire resistance range.							
• Standard (epoxy coated)		**@25°C**					
MOX-400-23	500Ω to 300,000M	0.75W	2,500V	0.5% to 20%	0.580" / *14.78*	0.165" / *4.19*	1.00
MOX-750-23	1K to 600,000M	1.00W	5,000V	0.5% to 20%	0.880" / *22.35*	0.165" / *4.19*	0.75
MOX1125-23	1K to 1,000,000M	1.50W	7,500V	0.5% to 20%	1.270" / *32.26*	0.165" / *4.19*	0.25

PERFORMANCE DATA

Characteristic	Test Method	Specification
Humidity	MIL-STD-202, Method 103B, Condition B	±0.25%
Dielectric Withstanding Voltage	MIL-STD-202, Method 301, 750V	±0.25%
Insulation Resistance	MIL-STD-202, Method 302, Condition A or B	>10,000M or greater dry
Thermal Shock	MIL-STD-202, Method 107G, Condition B, B-1, or F	±0.20%
Load Life	MIL-STD-202, Method 108A, Condition D	±2.0%
Resistance to Solvents	MIL-STD-202, Method 215G	Acceptable for the Standard Series Only
Terminal Strength	MIL-STD-202, Method 211A, Condition A or B	±0.25%
Shock (Specified Pulse)	MIL-STD-202, Method 213B, Condition I	±0.25%
Vibration, High Frequency	MIL-STD-202, Method 204D, Condition D	±.020%
Power Conditioning	MIL-R-49462A, Par 4.8	±0.50%
Solderability	MIL-STD-202, Method 208F	>95% Coverage

DERATING

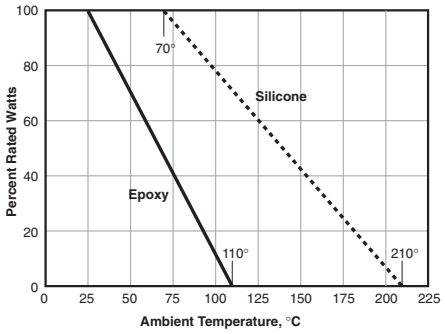

STANDARD TEMPERATURE/VOLTAGE COEFFICIENTS OF RESISTANCE

Resistor Series	Temp. Coeff. of Resistance* 25 PPM/°C	50 PPM/°C	100 PPM/°C	Voltage Coeff. of Resistance** < 2PPM/Volt	< 5PPM/Volt
MOX-400	1K-99M	100M-450M	451M-30,000M	1K-1,000M	1,001M-100,000M
MOX-750	1K-199M	200M-900M	901M-70,000M	1K-2,000M	2,001M-100,000M
MOX1125	1K-299M	300M-1,350M	1,351M-100,000M	1K-3,000M	3,001M-100,000M

*TCR of 25ppm for temperature range of 0°C-85°C. TCR of 50ppm and 100ppm for -55°C to 125°C. Consult factory for TCR values operating higher than 125°C
**For tighter VCs please contact Ohmite.

ORDERING INFORMATION

Mini Mox Series — MOX

Style — 200, 300, 400, 750, 1125

Terminal
0 = MOX-200 or 300; MOX-200 Z or 300 Z = 50ppm
2 = 0.020"
7 = 0.032"

Coating
2 = Black silicone
3 = Epoxy
6 = No coating

Ohms
First 3 digits are significant; 4th digit is multiplier (# of zeroes to follow). Examples:
10R2 = 10.2 ohms
1000 = 100 ohms
1503 = 150,000 ohms

Tolerance
D = 0.5%
F = 1%
G = 2%
J = 5%
K = 10%
M = 15%
P = 20%

E = RoHS Compliant

M O X 1 1 2 5 2 3 1 0 0 6 F E

Not all tolerances available in all values.

Check product availability at **www.ohmite.com**

Maxi-Mox resistors are also versatile. Suitable for industrial applications requiring still more power for high voltage switching, industrial control, and high voltage current limiting.

Maxi-Mox

Precision Thick Film Axial Terminal High Voltage/High Resistance

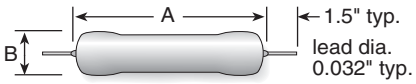

FEATURES

- Wide resistance ranges
- Voltage rating to 50KV
- Power rating to 12.5 watts
- Silicone or epoxy coating

APPLICATIONS

- HV power supplies
- Power distribution
- Medical instrumentation
- Avionics

SPECIFICATIONS

Material

Core: Alumina

Resistor: Thick Film

Terminal: RoHS solder composition is 96% Sn, 3.5% Ag, 0.5% Cu

Electrical

Resistance Range: 250Ω to 1 Teraohm

Power Rating: 2.0W to 12.5W

Voltage Rating: 10KV to 50KV

Tolerance: 0.5% to 20%; not all tolerances available in all values

Operating Temperature: -55°C to +210°C

Temperature Coefficient: 25ppm/°C 0° to 85°C available

Ohmite Series	Resistance Range (Ohms	Power @70°C	Voltage Rating	Available Tolerances*	A max. (in/*mm*)	B max. (in/*mm*)	Capacitance (pf)
• High-temperature (silicone coated)							
MOX-1-12	250 ohms to 300,000M	2.5W	10.0KV	1% to 20%	1.120" / *28.45*	0.310" / *7.87*	0.75
MOX-2-12	500 ohms to 700,000M	5.0W	20.0KV	1% to 20%	2.120" / *53.85*	0.310" / *7.87*	0.60
MOX-3-12	750 ohms to 1,000,000M	7.5W	30.0KV	1% to 20%	3.120" / *79.24*	0.310" / *7.87*	0.50
MOX-4-12	1K to 1,000,000M	10.0W	40.0KV	1% to 20%	4.120" / *104.65*	0.310" / *7.87*	0.40
MOX-5-12	1.25K to 1,000,000M	12.5W	50.0KV	1% to 20%	5.120" / *130.05*	0.310" / *7.87*	0.30

*Some tolerances are not available over the entire resistance range.

• Standard (epoxy coated)		**@25°C**					
MOX-1-13	250 ohms to 300,000M	2.0W	10.0KV	0.1% to 20%	1.140" / *28.96*	0.345" / *8.76*	0.75
MOX-2-13	500 ohms to 700,000M	3.0W	20.0KV	0.1% to 20%	2.140" / *54.36*	0.345" / *8.76*	0.60
MOX-3-13	750 ohms to 1,000,000M	4.0W	30.0KV	0.1% to 20%	3.140" / *79.76*	0.345" / *8.76*	0.50
MOX-4-13	1K to 1,000,000M	5.0W	40.0KV	0.1% to 20%	4.140" / *105.16*	0.345" / *8.76*	0.40
MOX-5-13	1.25K to 1,000,000M	6.0W	50.0KV	0.1% to 20%	5.140" / *130.56*	0.345" / *8.76*	0.30

TEMPERATURE/VOLTAGE COEFFICIENTS OF RESISTANCE

Resistor Series	Temp. Coeff. of Resistance* 25 PPM/°C	50 PPM/°C	100 PPM/°C	Voltage Coeff. of Resistance** < 2PPM/Volt	< 5PPM/Volt
MOX-1	1K-99M	100M-450M	451M-30,000M	250Ω-1,000M	1,001M-100,000M
MOX-2	1K-199M	200M-1,000M	1,001M-60,000M	500Ω-2,600M	2,601M-200,000M
MOX-3	1K-299M	300M-1,500M	1,501M-90,000M	750Ω-4,000M	4,001M-300,000M
MOX-4	1K-399M	400M-2,000M	2,001M-120,000M	1K-5,300M	5,301M-400,000M
MOX-5	1K-499M	500M-2,500M	2,501M-150,000M	1.25K-6,700M	6,701M-500,000M

*TCR of 25ppm for temperature range of 0°C-85°C. TCR of 50ppm and 100ppm for -55°C to 125°C. Consult factory for TCR values operating higher than 125°C

**For tighter VCs please contact Ohmite.

PERFORMANCE DATA

Characteristic	Test Method	Specification
Humidity	MIL-STD-202, Method 103B, Condition B	±0.25%
Dielectric Withstanding Voltage	MIL-STD-202, Method 301, 750V	±0.25%
Insulation Resistance	MIL-STD-202, Method 302, Condition A or B	>10,000 M or greater dry
Thermal Shock	MIL-STD-202, Method 107G, Condition B, B-1, or F	±0.20%
Load Life	MIL-STD-202, Method 108A, Condition D	±1.0%
Resistance to Solvents	MIL-STD-202, Method 215G	Acceptable for High Reliability Series only
Terminal Strength	MIL-STD-202, Method 211A, Condition A or B	±0.25%
Shock (Specified Pulse)	MIL-STD-202, Method 213B, Condition I	±0.25%
Vibration High Frequency	MIL-STD-202, Method 204D, Condition D	±0.20%
Power Conditioning	MIL-R-49462A, Par 4.8	±0.50%
Solderability	MIL-STD-202, Method 208F	>95% Coverage

DERATING

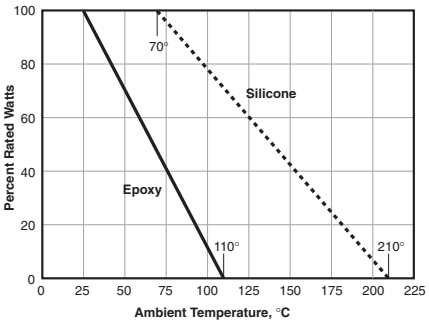

ORDERING INFORMATION

Coating
2 = Black silicone
3 = Epoxy
6 = No coating

Style
1,2,3,4,5,8

E = RoHS Compliant

M O X - 1 - 1 3 1 0 0 6 F E

Maxi Mox Series

Terminal
1 = 0.032"

Ohms
First 3 digits are significant; 4th digit is multiplier (# of zeroes to follow). Examples:
1000 = 100Ω
1503 = 150,000Ω
5005 = 50,000,000Ω

Tolerance
D = 0.5%
F = 1%
G = 2%
J = 5%
K = 10%
M = 15%
P = 20%

Not all tolerances available in all values.

Check product availability at **www.ohmite.com**

Power-Mox

Precision Power Thick Film High Voltage/High Resistance Tubular

FEATURES

- Wide resistance ranges
- Outstanding voltage coefficient
- 0.4" diameter ferrule, 0.25"-20 threaded end cap, or radial bands available
- Metal oxide resistive elements

APPLICATIONS

- Power Transmitters
- Pollution Control Systems
- Industrial Control Systems
- Current pulse limiters
- Vacuum and space application

SPECIFICATIONS

Material
Core: Ceramic.
Coating: Varnish

Electrical
Resistance Range: 20K to 1,000,000M
Power Rating: to 75W
Voltage Rating: to 60KV
Operating Temperature: -65°C to +180°C
Temperature Coefficient: 25ppm: 0° to 85°C; 50ppm -55° to 180°C

The heavy duty construction of the Power-Mox series make them durable in most high voltage industrial applications. This product is well known for its high voltage ratings, low voltage coefficients, very high ohmic values, and resistor divider options. Terminations can be selected to adapt to most mounting schemes.

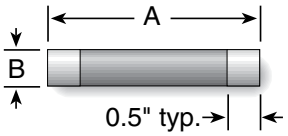

Ohmite Series	Resistance Range (Ohms)	Power @25°C	Voltage Rating	Available Tolerances	A ± 0.05	B Max
MOX-F	1K to 800,000M	25W	20KV	0.5, 1, 2, 5	3.0" / *76.2*	0.770" / *19.56*
MOX-G	1.5K to 1,000,000M	40W	30KV	0.5, 1, 2, 5	4.5" / *114.3*	0.770" / *19.56*
MOX-H	2K to 1,000,000M	50W	45KV	0.5, 1, 2, 5	6.0" / *152.4*	0.770" / *19.56*
MOX-J	3K to 1,000,000M	75W	60KV	0.5, 1, 2, 5	8.0" / *203.2*	0.770" / *19.56*

Some tolerances are not available over the entire resistance range.

ORDERING INFORMATION

Style F, G, H, J

E = RoHS Compliant

M O X - J - 0 4 1 0 0 6 F E

Power Mox Series

Terminal
01 = Silver termination only
02 = Radial band
03 = 0.4" Ferrule
04 = 1/4 X 20 threaded Ferrule cap

Ohms
First 3 digits are significant; 4th digit is multiplier (# of zeroes to follow). Examples:
10R2 = 10.2 ohms
1000 = 100 ohms
1503 = 150,000 ohms

Tolerance
D = 0.5%
F = 1%
G = 2%
J = 5%
K = 10%
M = 15%
P = 20%

Power-Mox Dividers

Precision Power Thick Film High Voltage/High Resistance Tubular Dividers

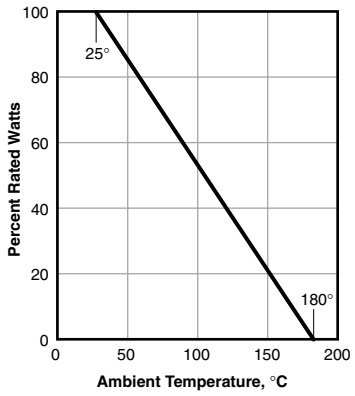

Ohmite Series	Resistance Range (Ohms)	Power @25°C	Voltage Rating	Maximum Ratio	Ratio Tolerances	A ± 0.05	B Max
MOX-FRD	20K to 2,500M	15W	15KV	5,000:1	1, 2, 5%	3.0" / *76.2*	0.770" / *19.56*
MOX-GRD	20K to 4,000M	30W	25KV	5,000:1	1, 2, 5%	4.5" / *114.3*	0.770" / *19.56*
MOX-HRD	20K to 6,000M	40W	35KV	5,000:1	1, 2, 5%	6.0" / *152.4*	0.770" / *19.56*
MOX-JRD	20K to 6,000M	60W	50KV	5,000:1	1, 2, 5%	8.0" / *203.2*	0.770" / *19.56*

POWER-MOX ALTERNATE TERMINALS

"01" Lead "Power-Mox RD" Series with silver terminations

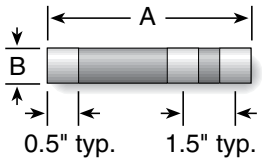

"02" Lead "Power-Mox" Series with radial band option

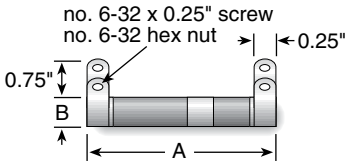

"03" Lead "Power-Mox" Series with Ferrule end caps

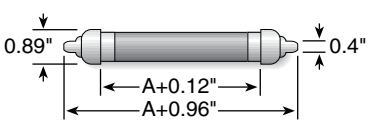

"04" Lead "Power-Mox" Series with 1/4 - 20 threaded end caps

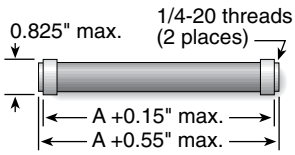

To specify Power-Mox **Dividers,** please see our website at:
www.ohmite.com/dividers

RX-1M Hi-Meg

Ultra High Resistance
High Stability Hermetically Sealed

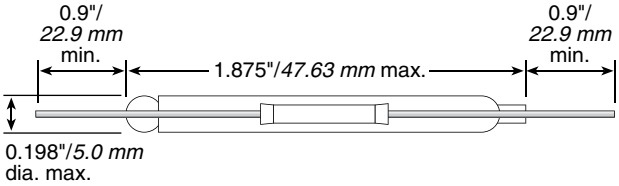

ORDERING INFORMATION

R X - 1 M 1 0 0 6 F E – RoHS Compliant

Hi-Meg Series

Ohms
First 3 digits are significant; 4th digit is multiplier (# of zeroes to follow). Examples:
1506 = 150 MΩ
1509 = 150 GΩ
150A = 1.5 TΩ
100B = 10 TΩ

Tolerance
D = 0.5%
F = 1%
G = 2%
J = 5%
K = 10%
M = 15%
P = 20%

Check product availability at
www.ohmite.com

These Hi-Meg resistors are designed for use in electrometer circuits where a high order of performance is required. These resistors achieve a high degree of accuracy and stability, and operate at this high performance level for an extended period of time. By being vacuum sealed in a glass envelope, these Hi-Megs are suitable for ultra-high vacuum applications.

FEATURES

- Glass sealed hermetric resistors
- Improved temperature stability
- Improved voltage stability
- Metal oxide resistive elements
- No outgassing
- RoHS compliant
- Calibration available

APPLICATIONS

- Ultra high vacuum
- Medical instrumentation
- Current pulse limiters
- Avionics

SPECIFICATIONS

Electrical
Resistance Range:
1M to 10,000,000M
Power Rating: 0.5W at 25°C
Voltage Rating: 1.0KV
Temperature Coefficient:
as low as 50PPM/°C

Handling and Cleaning of RX-1M Resistors:

These glass encapsulated resistors, especially those of higher resistance value, require extraordinary cleanliness. These resistors should be handled by the terminals, unless gloves are worn. Fingerprints on the surface of the resistor will attract contaminants and moisture, which will cause a parallel resistance path, reducing the resistance value of the device. If cleaning should become necessary, use isopropyl alcohol and lightly wipe dry with lint free tissues such as Kimwipes.

Engineering Resistor Kits

HI-MEG DECADE SETS: GENERAL SPECIFICATIONS

Ohmite Series	Resistance Range (Ohms)	Available Tolerances
RX-1M-1	1M - 10,000 M	1%
RX-1M-2	10M - 10,000M	1%
RX-1M-2	1M - 100,000M	5%
RX-1M-3	100M - 10,000M	1%
RX-1M-3	100M - 100,000M	5%
RX-1M-3	100M - 1,000,000M	10%

FEATURES

- Excellent for design engineering
- Fourteen different style/ resistance combinations
- Resistor kits are available in a 1% tolerance
- Five resistors of each style: 70 resistors in all
- Resistors can be used in parallel or series circuits to achieve any resistance value within the resistance range
- Kits are shipped in high quality storage cases

These resistors can be calibrated for use as resistor standards. The calibration point (voltage) must be specified by the user. Contact Ohmite for further assistance.

SLIM-MOX RESISTOR KITS

Ohmite Style	Resistance Range	Voltage Rating	Power Rating
SLIM-MOX102	1 Meg	5.0KV	1.0W
SLIM-MOX102	5 Meg	5.0KV	1.0W
SLIM-MOX104	5 Meg	10.0KV	1.5W
SLIM-MOX102	10 Meg	5.0KV	1.0W
SLIM-MOX108	10 Meg	20.0KV	2.5W
SLIM-MOX102	50 Meg	5.0KV	1.0W
SLIM-MOX104	50 Meg	10.0KV	1.5W
SLIM-MOX104	100 Meg	10.0KV	1.5W
SLIM-MOX108	100 Meg	20.0KV	2.5W
SLIM-MOX102	500 Meg	5.0KV	1.0W
SLIM-MOX108	500 Meg	20.0KV	2.5W
SLIM-MOX102	1,000 Meg	5.0KV	1.0W
SLIM-MOX104	1,000 Meg	10.0KV	1.5W
SLIM-MOX108	1,000 Meg	20.0KV	2.5W

MINI-MOX RESISTOR KITS

Ohmite Style	Resistance Range	Voltage Rating	Power Rating
MOX-300	1 Meg	1,000V	0.50W
MOX-200	2 Meg	500V	0.25W
MOX-400-23	5 Meg	2,500V	0.75W
MOX-300	10 Meg	1,000V	0.50W
MOX-200	20 Meg	500V	0.25W
MOX-300	30 Meg	1,000V	0.50W
MOX-400-23	50 Meg	2,500V	0.75W
MOX1125-23	100 Meg	7,500V	1.50W
MOX-400-23	200 Meg	2,500V	0.75W
MOX-300	300 Meg	1,000V	0.50W
MOX-400-23	500 Meg	2,500V	0.75W
MOX-750-23	1,000 Meg	5,000V	1.00W
MOX-750-23	2,000 Meg	5,000V	1.00W
MOX1125-23	10,000 Meg	7,500V	1.50W

"SLIM-MOX" Kit series

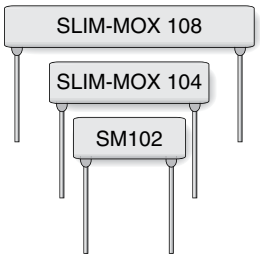

"MINI-MOX" Kit series

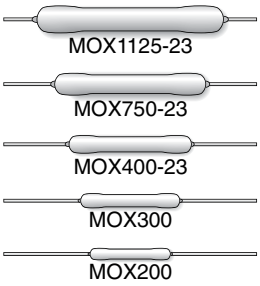

Rheostats

(Potentiometers) Wirewound

Model C

Mounting: Panels to 0.125" (3.18mm) thick with 0.25-32 bushing and hex nut (0.063" thick).

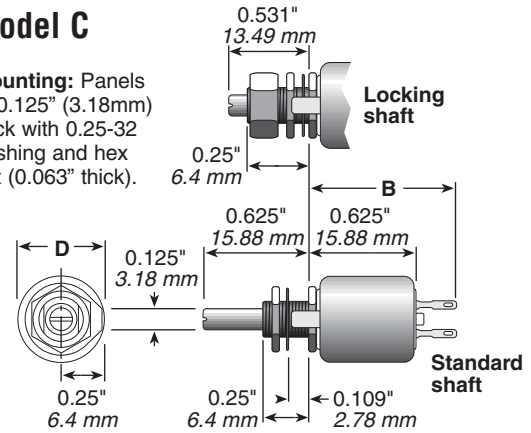

Model E

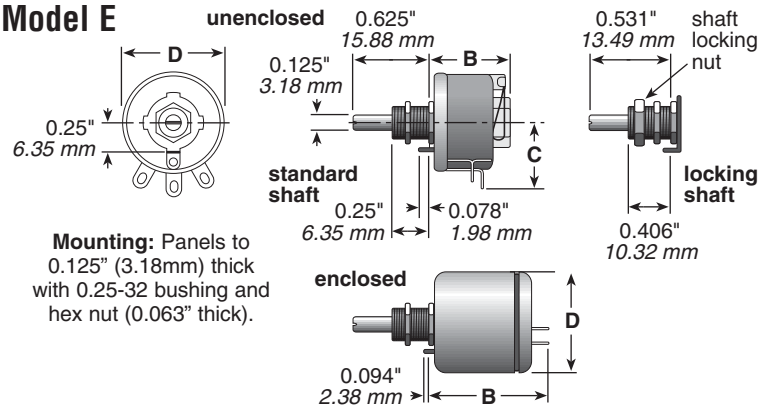

Mounting: Panels to 0.125" (3.18mm) thick with 0.25-32 bushing and hex nut (0.063" thick).

Models P, N, R, U

	Dimension "M"	
P	0.875"	22.23 mm
N	1.188"	30.16 mm
R	1.5"	38.1 mm
U	3"	76.2 mm

Mounting: Panels to 1.25" (31.75mm) thick with 0.25-20 flat-head screws.

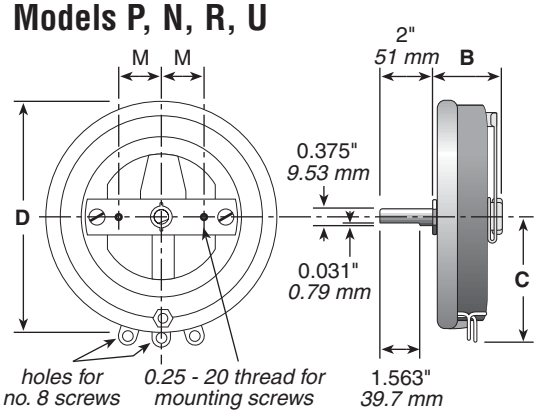

Models H, J, G, K, L

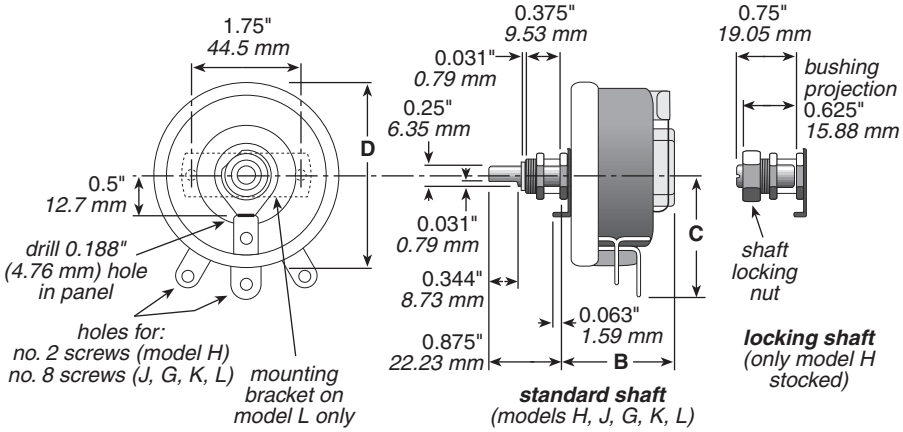

Mounting: Panels to 0.25" (6.35mm) thick with 0.375-32 bushing and hex nut (0.094" thick) (or with 10-32 x 0.75 F.H. screws for model L only).

Dimensions for reference only; consult factory for details.

Since all rheostats/potentiometers are electro-mechanical devices, they are subject to mechanical wear and, therefore, have a finite life.

Models H, J, K, L and N are listed under UL Reexamination Service File No. E-10946 and CSA File No. 21309 unless noted otherwise.

All rheostats are 10% tolerance.

See page 93 for knobs, dials, and other hardware

ORDERING INFORMATION

Series: Rheostats Wirewound Potentiometers

R C S R 5 0 E

E = RoHS compliant

Code	Watts	Model	Shaft	Core
CL =	7.5	C	Locking	Enclosed
CS =	7.5	C	Standard	Enclosed
EE =	12.5	E	Standard	Enclosed
EL =	12.5	E	Locking	Open
ES =	12.5	E	Standard	Open
GS =	75	G	Standard	Open
HL =	25	H	Locking	Open
HS =	25	H	Standard	Open
JS =	50	J	Standard	Open
KS =	100	K	Standard	Open
LS =	150	L	Standard	Open
NS =	300	N	Standard	Open
PS =	225	P	Standard	Open
RS =	500	R	Standard	Open
US =	1000	U	Standard	Open

Resistance Value*

Example:

R50	=	0.50Ω
1R0	=	1Ω
7R5	=	7.5Ω
250	=	250Ω
1K0	=	1,000Ω
1K75	=	1,750Ω
4K5	=	4,500Ω
50K	=	50,000Ω

**Check Table for Standard Resistance Values and Maximum Current Values*

Model	Type	Watts	Ohmic range	Core	Max. Voltage (RMS)*	Behind panel "B" (In./*mm*)	Diameter "D" (In./*mm*)	Dimension "C" (In./*mm*)	Shaft torque	Rotation (±5°)
E	RES/REL	12.5	1.0-15K	open	305	0.688/*17.46*	0.875/ *22.23*	0.594/*15.08*	1-6 oz. in.	300°
H	RHS/RHL	25	1.0-25K	open	500	1.375/*34.93*	1.560/ *39.62*	0.940/*23.88*	0.25-0.5 lb. in.	300°
J	RJS	50	0.5-50K	open	750	1.375/*34.93*	2.31 / *58.67*	1.56 /*39.62*	0.25-2 lb. in.	300°
G	RGS	75	0.5-50K	open	900	1.750/*44.45*	2.75 / *69.25*	1.78 /*45.21*	0.5-2 lb. in.	300°
K	RKS	100	0.5-50K	open	1000	1.750/*44.45*	3.125/ *79.38*	1.91 /*48.51*	0.5-2 lb. in.	300°
L	RLS	150	0.5-50K	open	1200	2.000 / *50.8*	4.00 /*101.60*	2.28 /*57.91*	0.5-3 lb. in.	300°
P	RPS	225	1.0-30K	open	1300	2.125/*53.98*	5.00 /*127.00*	2.97 /*75.44*	2.5-4 lb. in.	310°
N	RNS	300	1.0-50K	open	1225	2.375/*60.33*	6.00 /*152.40*	3.44 /*87.38*	2.5-5 lb. in.	320°
R	RRS	500	1.0-20K	open	1450	2.125/*53.98*	8.00 /*203.20*	4.31/*109.47*	4.5-7 lb. in.	325°
U	RUS	1000	1.0-20K	open	1600	3.000 / *76.2*	12.00 /*304.80*	6.38/*162.05*	3.5-7 lb. in.	335°
C	RCS/RCL	7.5	10.0-5K	enclosed	305	0.875/*22.23*	0.515/ *13.08*	—	0.25-3 oz. in.	300°
E	REE	12.5	1.0-15K	enclosed	305	1.219/*30.96*	1.047/ *26.59*	—	1-6 oz. in.	300°

- Models H, J, G, and K also available in enclosed versions.
- See Catalog #203 for complete details.
- RoHS compliant product available. Add "E" suffix to part number to specify.
- Made-to-order rheostats available: Contact nearest Ohmite sales office.

* Voltage rating dependent on resistance value.

STANDARD PART NUMBERS FOR RHEOSTATS

Ohmic value	Part No. Prefix ▯ Suffix▭	7.5W Model C Std. shaft RCS—	7.5W Model C Locking RCL—	7.5W Model C Amps max.	12.5W Model E Std. shaft RES—	12.5W Model E Locking REL—	12.5W Model E Enclosed REE—	12.5W Model E Amps max.	25W Model H Std. shaft RHS—	25W Model H Locking RHL—	25W Model H Amps max.	50W Model J RJS—	50W Model J Amps max.	75W Model G RGS—	75W Model G Amps max.	100W Model K RKS—	100W Model K Amps max.	150W Model L RLS—	150W Model L Amps max.	225W Model P RPS—	225W Model P Amps max.	300W Model N RNS—	300W Model N Amps max.	500W Model R RRS—	500W Model R Amps max.	1000W Model U RUS—	1000W Model U Amps max.
0.5	—R50											✔	10.0	✔	12.3	✔	14.1	✔	17.3								
1	—1R0				✔	✔	✔	3.53	✔	✔	5.00	✔	7.07	✔	8.66	✔	10	✔	12.3	✔	15.0	✔	17.32	✔	22.3	✔	31.6
1.5	—1R5																							✔	18.2	✔	25.8
2	—2R0				✔	✔	✔	2.50	✔	✔	3.54	✔	5.00	✔	6.12	✔	7.07	✔	8.65	✔	10.6	✔	12.24	✔	15.8	✔	22.4
2.5	—2R5				✔	✔	✔	2.24																✔	14.1	✔	20.0
3	—3R0				✔	✔	✔	2.04	✔	✔	2.88			✔	5.00	✔	5.75	✔	7.07	✔	8.66	✔	10.00	✔	12.9	✔	18.3
4	—4R0											✔	3.53							✔	7.50	✔	8.66	✔	11.2	✔	15.8
5	—5R0				✔	✔	✔	1.58						✔	3.88	✔	4.47	✔	5.48	✔	6.71	✔	7.75	✔	10.0	✔	14.1
6	—6R0				✔	✔	✔	1.44	✔	✔	2.04	✔	2.88														
7.5	—7R5													✔	3.16	✔	3.65	✔	4.47	✔	5.49	✔	6.32				
8	—8R0				✔	✔	✔	1.25	✔	✔	1.77	✔	2.50											✔	7.90	✔	11.2
10	—10R	✔	✔	0.86	✔	✔	✔	1.12	✔	✔	1.58			✔	2.74	✔	3.16	✔	3.88	✔	4.74	✔	5.48			✔	10.0
12	—12R											✔	2.04														
12.5	—12R5																							✔	6.30	✔	8.95
15	—15R	✔	✔	0.71	✔	✔	✔	0.91	✔	✔	1.29							✔	3.163	✔	3.87	✔	4.47				
16	—16R											✔	1.76	✔	2.17	✔	2.50							✔	5.60	✔	7.90
22	—22R											✔	1.50														
25	—25R	✔	✔	0.55	✔	✔	✔	0.71	✔	✔	1.00			✔	1.73	✔	2.0	✔	2.450	✔	3.00	✔	3.46	✔	4.47	✔	6.33
35	—35R	✔	✔	0.46	✔	✔	✔	0.60	✔	✔	0.845	✔	1.19					✔	2.070								
40	—40R																							✔	3.54		
50	—50R	✔	✔	0.39	✔	✔	✔	0.50	✔	✔	0.707	✔	1.00	✔	1.23	✔	1.41	✔	1.735	✔	2.12	✔	2.45	✔	3.16	✔	4.47
75	—75R	✔	✔	0.32	✔	✔	✔	0.40	✔	✔	0.575			✔	1.00	✔	1.15	✔	1.415	✔	1.73	✔	2.00			✔	3.65
80	—80R											✔	0.790											✔	2.52		
100	—100	✔	✔	0.27	✔	✔	✔	0.36	✔	✔	0.500			✔	0.866	✔	1.00	✔	1.225	✔	1.50	✔	1.73			✔	3.16
125	—125				✔	✔	✔	0.32	✔	✔	0.445	✔	0.630											✔	2.00		
150	—150	✔	✔	0.22	✔	✔	✔	0.29				✔	0.575					✔	1.000	✔	1.22	✔	1.41				
160	—160																										
175	—175				✔	✔	✔	0.27	✔	✔	0.375													✔	1.69	✔	2.39
200	—200	✔	✔	0.19	✔	✔	✔	0.25						✔	0.612	✔	0.707	✔	0.865	✔	1.06	✔	1.22				
225	—225											✔	0.470													✔	2.11
250	—250	✔	✔	0.17	✔	✔	✔	0.22	✔	✔	0.316							✔	0.775					✔	1.41		
300	—300											✔	0.408	✔	0.500	✔	0.575			✔	0.866	✔	1.00			✔	1.83
325	—325																							✔	1.24		
350	—350	✔	✔	0.15	✔	✔	✔	0.19	✔	✔	0.267							✔	0.655								
400	—400													✔	0.433	✔	0.500			✔	0.750	✔	0.866			✔	1.48
500	—500	✔	✔	0.12	✔	✔	✔	0.16	✔	✔	0.222	✔	0.316	✔	0.388	✔	0.447	✔	0.548					✔	1.00	✔	1.41
600	—600																										
700	—700																			✔	0.567	✔	0.655				
750	—750	✔	✔	0.10	✔	✔	✔	0.13	✔	✔	0.182			✔	0.316	✔	0.365	✔	0.447					✔	0.817	✔	1.15
800	—800											✔	0.250														
900	—900																			✔	0.500	✔	0.578				
1000	—1K0	✔	✔	0.086	✔	✔	✔	0.10	✔	✔	0.155	✔	0.224	✔	0.274	✔	0.316							✔	0.707	✔	1.00
1200	—1K2																			✔	0.433	✔	0.500				
1250	—1K25																	✔	0.346								
1500	—1K5	✔	✔	0.071	✔	✔	✔	0.090	✔	✔	0.129			✔	0.224	✔	0.258			✔	0.387	✔	0.447	✔	0.577	✔	0.816
1600	—1K6											✔	0.176														
1750	—1K75																			✔	0.358	✔	0.414				
1800	—1K8																	✔	0.288								
2000	—2K0													✔	0.194	✔	0.224			✔	0.336	✔	0.387	✔	0.500		
2250	—2K25																	✔	0.259								
2500	—2K5	✔	✔	0.055	✔	✔	✔	0.070	✔	✔	0.100	✔	0.141	✔	0.173	✔	0.200			✔	0.300	✔	0.346	✔	0.447	✔	0.633
3000	—3K0																	✔	0.224								
3500	—3K5	✔	✔	0.046	✔	✔	✔	0.060	✔	✔	0.084	✔	0.119														
4500	—4K5																	✔	0.182								
5000	—5K0	✔	✔	0.039	✔	✔	✔	0.050	✔	✔	0.070	✔	0.100	✔	0.123	✔	0.141										
7500	—7K5				✔	✔	✔	0.041	✔	✔	0.058			✔	0.100	✔	0.115	✔	0.141								
8000	—8K0											✔	0.079														
10000	—10K				✔	✔	✔	0.035	✔	✔	0.050	✔	0.070	✔	0.087	✔	0.100	✔	0.122								
12500	—12K5				✔	✔	✔	0.031																			
15000	—15K				✔	✔	✔	0.029	✔	✔	0.041	✔	0.058														
20000	—20K								✔	✔	0.035	✔	0.050														
25000	—25K								✔	✔	0.032	✔	0.045														
30000	—30K											✔	0.041														
40000	—40K											✔	0.035														
50000	—50K											✔	0.032														

✔ = Standard values; check availability

Rheostats are silicone-ceramic coated at and above the following ohmic values:

Model C: all
Model E: 750Ω
Model H: 2000Ω
Model J: 5000Ω
Model G: 5000Ω
Model K: 5000Ω
Model L: 7500Ω

Check product availability at
www.ohmite.com

Potentiometers

Molded composition

Ohmite molded composition potentiometers are available in various models for applications in military devices, industrial equipment and in equipment requiring a convenient resistance control device.

FEATURES

- Low noise, smooth operation
- In accordance with "Mil" RV4N, RV4L, RV6L, RV6N, 2RV7N types
- RoHS compliant; non-RoHS version unavailable.

SPECIFICATIONS

Electrical

Derating: linear from 100% at +70°C to 0% at +120°C

Operating temp. range: -55°C to 120°C

Material

Construction: Elements molded into a single, integral structure. Metal cover protects and shields the internal parts.

Sealing: synthetic resin containing non-mercurial fungicide

Since all rheostats/potentiometers are electro-mechanical devices, they are subject to mechanical wear and, therefore, have a finite life.

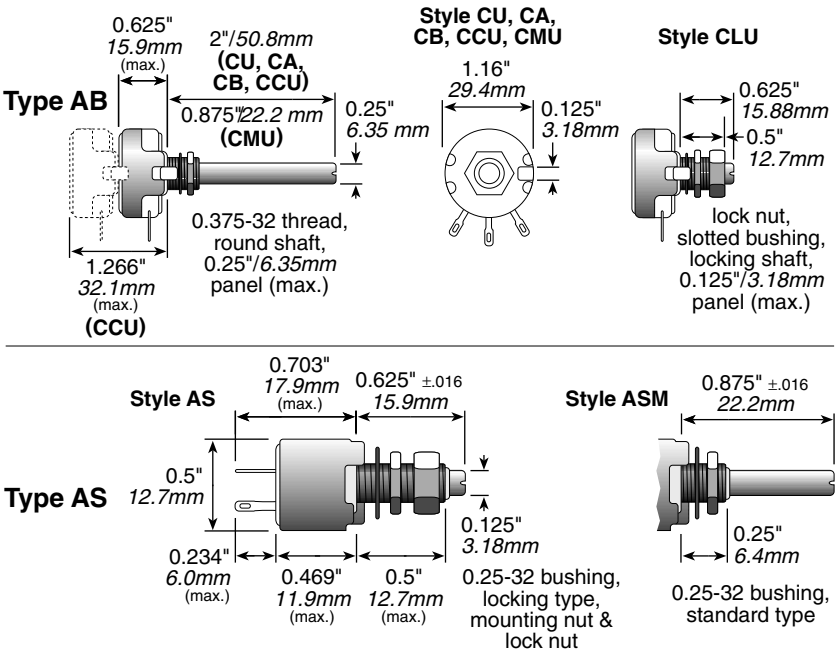

Model	Watts	Ohmic range	Behind panel (In./*mm*)	Diameter (In./*mm*)	Rotation	Voltage (RMS)
AS	0.5	50-5M	0.703/*17.9*	0.50/*12.7*	295° ±5°	350
ASM	0.5	50-5M	0.703/*17.9*	0.50/*12.7*	295° ±5°	350
CA	2.0	50-5M	0.625/*15.9*	1.16/*29.4*	312° ±3°	500
CB	2.0	50-5M	0.625/*15.9*	1.16/*29.4*	312° ±3°	500
CU	2.0	50-5M	0.625/*15.9*	1.16/*29.4*	312° ±3°	500
CCU	2.0	50-5M	1.266/*32.1*	1.16/*29.4*	312° ±3°	500
CLU	2.0	50-5M	0.625/*15.9*	1.16/*29.4*	312° ±3°	500
CMU	2.0	50-5M	0.625/*15.9*	1.16/*29.4*	312° ±3°	500

STANDARD PART NUMBERS FOR POTENTIOMETERS

Ohmic value	MIL Designation Prefix ➤ Suffix ▼	Part No. Prefix ➤ Suffix ▼	RV4NAYSD Linear CMU	RV4NAYSJ Linear CU	RV4NAYSJ CW log CA	RV4NAYSJ CCW log CB	RV4LAYSA Linear CLU	2RV7NYSJ Linear Dual* CCU	RV6LAYSA Linear	RV6NAYSD Linear
50	500A	5001	✔	✔			✔			
100	101A	1011	✔	✔			✔		✔ **AS**3601E	✔ **ASM**6661E
150	151A	1511	✔	✔			✔			
250	251A	2511	✔	✔			✔		✔ **AS**3602E	✔ **ASM**6662E
350	351A	3511	✔	✔			✔			
500	501A	5011	✔	✔			✔		✔ **AS**3603E	✔ **ASM**6663E
750	751A	7511	✔	✔			✔			
1,000	102A	1021	✔	✔			✔		✔ **AS**3604E	✔ **ASM**6664E
1,500	152A	1521	✔	✔			✔			
2,500	252A	2521	✔	✔			✔		✔ **AS**3605E	✔ **ASM**6665E
3,500	352A	3521	✔	✔			✔			
5,000	502A	5021	✔	✔			✔		✔ **AS**3606E	✔ **ASM**6666E
7,500	752A	7521	✔	✔			✔			
10,000	103A	1031	✔	✔		✔	✔	✔	✔ **AS**3607E	✔ **ASM**6667E
15,000	153A	1531	✔	✔			✔			
25,000	253A	2531	✔	✔		✔	✔	✔	✔ **AS**3608E	✔ **ASM**6668E
35,000	353A	3531	✔	✔			✔			

Ohmic value	MIL Designation Prefix ➤ Suffix ▼	Part No. Prefix ➤ Suffix ▼	RV4NAYSD Linear CMU	RV4NAYSJ Linear CU	RV4NAYSJ CW log CA	RV4NAYSJ CCW log CB	RV4LAYSA Linear CLU	2RV7NYSJ Linear Dual* CCU	RV6LAYSA Linear	RV6NAYSD Linear
50,000	503A	5031	✔	✔		✔	✔	✔	✔ **AS**3609E	✔ **ASM**6669E
75,000	753A	7531	✔	✔			✔			
100,000	104A	1041	✔	✔	✔		✔	✔	✔ **AS**3610E	✔ **ASM**6670E
150,000	154A	1541	✔	✔			✔			
250,000	254A	2541	✔	✔	✔		✔	✔	✔ **AS**3611E	✔ **ASM**6671E
350,000	354A	3541	✔	✔			✔			
500,000	504A	5041	✔	✔	✔		✔	✔	✔ **AS**3612E	✔ **ASM**6672E
750,000	754B	7542	✔	✔			✔			
1,000,000	105B	1052	✔	✔	✔		✔	✔	✔ **AS**3613E	✔ **ASM**6673E
1,500,000	155B	1552	✔	✔			✔			
2,000,000	205B	2052	✔	✔			✔		✔ **AS**3684E	✔ **ASM**6674E
2,500,000	255B	2552	✔	✔	✔		✔		✔ **AS**3614E	✔ **ASM**6675E
3,500,000	355B	3552	✔	✔			✔			
5,000,000	505B	5052	✔	✔			✔		✔ **AS**3615E	✔ **ASM**6676E

✔ = Standard values; check availability

* add "-E" for RoHS-compliant lead-free zinc-nickel plated product

Check product availability at **www.ohmite.com**

Power Tap Switches

High-current, Non-shorting Type

Model 711

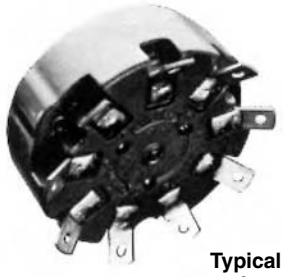

Typical ceramic style

Typical tandem model

Model	Rating (AC)	Rating (DC)*	Max. no. of taps	Overall Diameter (max., in./*mm*)	Depth behind panel (in./*mm*) single	2 in tandem	3 in tandem	Shaft Torque
711	7A 125V	7A 20V	11	1.56 / *39.6*	13/16 / *20.6*	1 25/32 / *45.2*	2 15/32 / *62.7*	7-12 oz.-in.
111	15A 125V	15A 20V	11	2.19 / *56*	1 1/8 / *28.7*	2 3/4 / *69.9*	—	1.5-3.8 in.-lbs.
212	20A 150V	20A 20V	12	2.25 / *57*	1 3/4 / *44.5*	4 3/16 / *106.4*	6 3/16 / *157.2*	3-7 in.-lbs.
312	30A 300V	30A 20V	12	3.31 / *84*	2 1/4 / *57.2*	4 5/8 / *117.5*	7 / *177.8*	3-7 in.-lbs.
412	50A 300V	50A 20V	12	4.25 / *108*	2 7/16 / *61.9*	5 1/32 / *127.8*	7 5/8 / *193.7*	3-8 in.-lbs.
608	100A 300V	100A 20V	8	6.25 / *159*	3 5/16 / *84.1*	6 13/16 / *173.0*	10 5/16 / *261.9*	25-35 in.-lbs.

*non-inductive load

All dimensions for reference only; consult factory for details.

Ohmite power Tap Switches (high power rotary switches) are constructed to provide dependable, convenient operation.

All Ohmite tap switches, from 15 to 100 amps, have ceramic arc-proof bodies and metal alloy contacts. Their all-soldered and all-riveted construction assures mechanical and operational integrity. Even the smallest Ohmite Tap Switch, rated at 7 amps, has a reinforced non-metal body and solid metal alloy contacts. These units feature high current handling capability in a small package.

FEATURES

- "Slow-breaking, Quick-make" action proved best for switching AC current.
- Non-shorting type disconnects previous circuit before establishing contact for succeeding tap.
- Ceramic and metal construction provides resistance to arcing, burning and charring.
- Tandem assemblies available as standard models.
- UL listed for models 111, 212, 312 and 412
- RoHS compliant product available Jan. 2006 Add "E" suffix to part number to specify.

SPECIFICATIONS

Material

Body: Ceramic, arc-proof (models 212, 312, 412, 608). Compression Molded Polyester (model 111). Melamine Phenolic (model 711)

Contacts: Silver alloy. Common contact is rounded for assured seating. Self-cleaning with built in wiping action.

Terminals: Soldering. 711 also accepts quick connectors; 412, #10 screws; 608, 0.25" bolts.

Mounting

Model 711: Using 3/8-32 bushing for 1/8" thick maximum panel. Four non-turn lug positions are possible on the single, unenclosed switch. Recesses in body of switch permit positioning of non-turn washer at "12, 3, 6 and 9 o'clock." 3/16 " hole for non-turn washer. Shaft 1/4"

Model 111: For 1/4" panel, maximum, using 3/8-32 bushing and hex nut. A 3/16" hole is required for the non-turn washer. Shaft 1/4"

Model 212: Using 3/8-32 threaded bushing and hex nut. A 5/32" hole is required for the non-turn pin. Shaft 1/4"

Model 312: For 1/4" panel, maximum, use three 10-32 flat-head machine screws 3/8" long. Shaft 1/4"

Model 412: For 1/4" panel, maximum, use three 10-32 flat-head machine screws 3/8" long. A 5/16" hole in panel is required for shaft.

Model 608: For 1" panel, maximum, three flat-head machining screws 1/4-20, 1 1/4" long. Drill a 7/16" hole in panel for shaft. Shaft 3/8"

NOTE: Since all tap switches are electro-mechanical devices, they are subject to wear and, therefore, have a finite life.

STANDARD PART NUMBERS FOR POWER TAP SWITCHES

Number of taps*	Total rotation	Model 711 7A - 125V: Single unit 711-*	2 in tandem 711-*-T2	3 in tandem 711-*-T3	Model 111 15A - 125V: Single unit 111-*	2 in tandem 111-*-T2	Model 212 20A - 150V: Single unit 212-*	2 in tandem 212-*-T2	3 in tandem 212-*-T3	Model 312 30A - 300V: Single unit 312-*	2 in tandem 312-*-T2	3 in tandem 312-*-T3	Model 412 50A - 300V: Single unit 412-*	2 in tandem 412-*-T2	3 in tandem 412-*-T3
3	60°	✣	✣	✣	✣	✣	✣	✣	✣	✣	✣	✣	✣	✣	✣
4	90°	✣	✣	✣	✣	✣	✣	✣	✣	✣	✣	✣	✣	✣	✣
5	120°	✣	✣	✣	✣	✣	✣	✣	✣	✣	✣	✣	✣	✣	✣
6	150°	✣	✣	✣	✣	✣	✣	✣	✣	✣	✣	✣	✣	✣	✣
7	180°	✣	✣	✣	✣	✣	✣	✣	✣	✣	✣	✣	✣	✣	✣
8	210°	✣	✣	✣	✣	✣	✣	✣	✣	✣	✣	✣	✣	✣	✣
9	240°	✣	✣	✣	✣	✣	✣	✣	✣	✣	✣	✣	✣	✣	✣
10	270°	✣	✣	✣	✣	✣	✣	✣	✣	✣	✣	✣	✣	✣	✣
11	300°	✣	✣	✣	✣	✣	✣	✣	✣	✣	✣	✣	✣	✣	✣
12	330°						✣	✣	✣	✣	✣	✣	✣	✣	✣

Number of taps*	Total rotation	Model 608 100A - 300V: Single unit 608-*	2 in tandem 608-*-T2	3 in tandem 608-*-T3
3	80°	✣	✣	✣
4	120°	✣	✣	✣
5	160°	✣	✣	✣
6	200°	✣	✣	✣
7	240°	✣	✣	✣
8	280°	✣	✣	✣

Check product availability at **www.ohmite.com**

✣ = Non-standard values subject to minimum handling charge per item

* Insert number of taps at asterisk for complete part number (e.g. 111-**3**-T2)

See page 82 for knobs, dials, and other hardware

Model 111

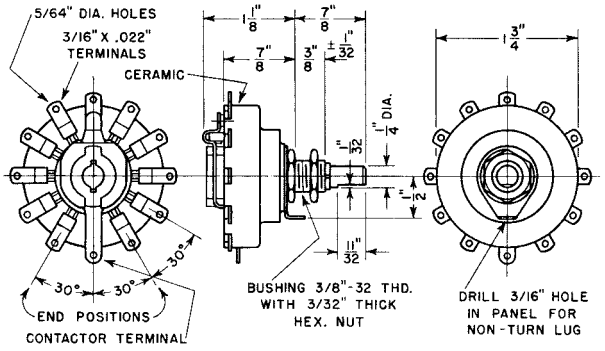

Model 212

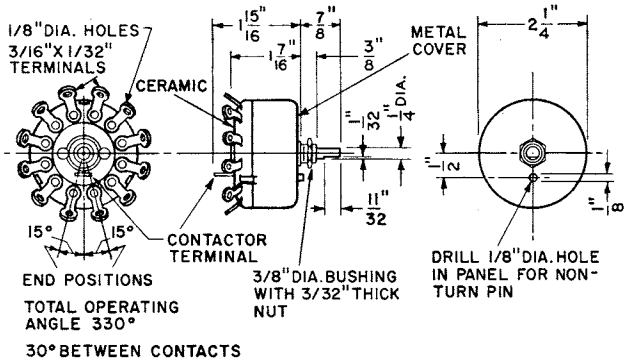

Model 312

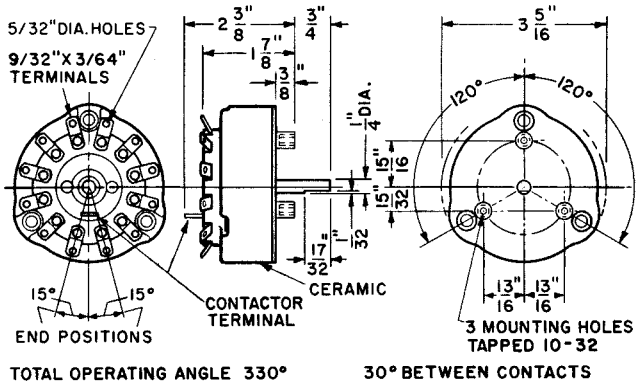

Model 412

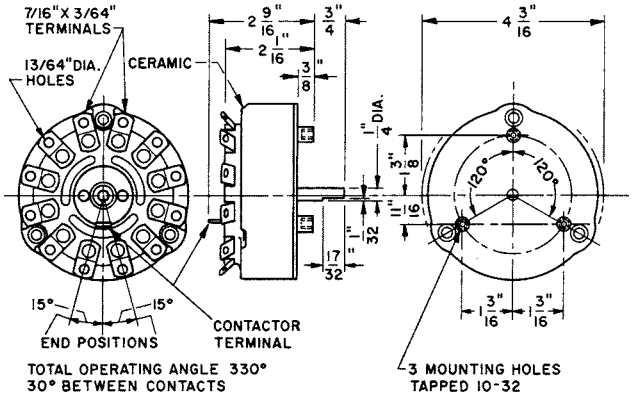

Model 608

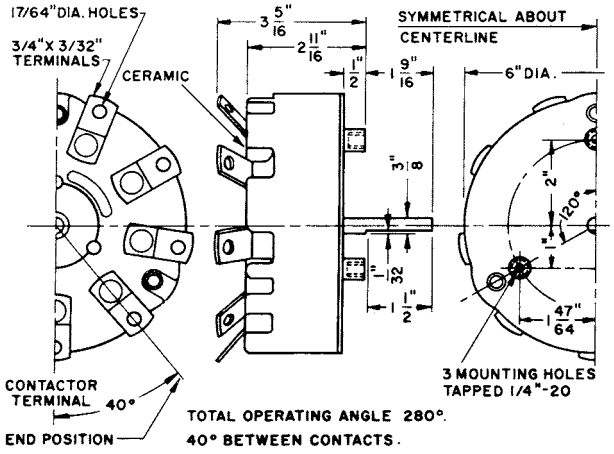

Rheostat and Tap Switch Hardware

Knobs, Dials, Mounting Fasteners

RHEOSTAT TANDEM COUPLING KITS

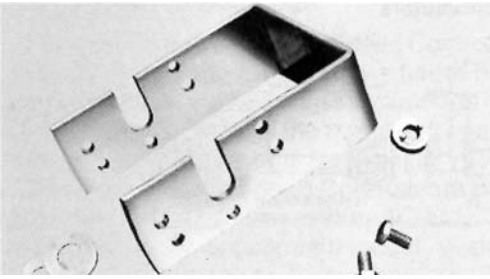

Ohmite coupling kits permit tandem mounting of two rheostat units. A coupling fastens to the shaft of the back unit; projections on the coupling engage the recesses in the driving hub of the front unit.

Each kit consists of a steel "U" frame, a coupling with set screw, mica washer, allen wrench and instructions.

Part No.	Front mount models	Rear mount models	Max. panel thickness
✔ 6532	H, J	H, J, G, K, L	5/32"
✔ 6533	G, K, L	H, J, G, K, L	1/8"
✤ 6591	E	E	1/16"

RHEOSTAT REPAIR KITS

Electrical contact replacement kit. Kit includes contact/slip ring assemblies (for round and ribbon wire rheostats), copper graphite washer, spring arm and hub. Instructions included.

Part No.	Rheostat model
✔ 7070	P
✔ 7071	N
✔ 7072	R
✔ 7074	U

EXTRA MOUNTING HARDWARE

Kit contains 25 each, nuts and lock washers for panel mounting units.

Part No.	For model
✔ 7090	E
✔ 7091	H, J, G, K, L, 111, 212, 711

✔ = Standard values
✤ = Non-standard values subject to minimum handling charge per item

KNOBS

Finger grip with pointer | Finger grip without pointer | Handwheel with pointer

Handwheel without pointer | Finger grip

Any knob can be used with any rheostat and tap switch model which has the corresponding shaft diameter. Knobs are fastened to shafts with slotted set screws.

Slotted set screw	Hex socket set socket	Description	Knob dia.	Hole dia.	Fits model
✤ 5102	—	Bar knob, 2 1/4" long	—	1/4"	H, J, G, K, L
✔ 5103	✔ 5103A	Bar knob, 1 1/4" long	—	1/4"	H, J, G, K, L
✔ 5104	✔ 5104A	Handwheel with pointer	3 1/4"	3/8"	P, N, R, U
✔ 5105	—	Handwheel without pointer	3 1/4"	3/8"	P, N, R, U
✔ 5106	✤ 5106A	Handwheel with pointer	3 1/4"	1/4"	H, J, G, K, L
✤ 5107	—	Handwheel without pointer	3 1/4"	1/4"	H, J, G, K, L
✔ 5109	✔ 5109A	Finger-grip with pointer	1 5/8"	1/4"	H, J, G, K, L
✔ 5110	✤ 5110A	Finger-grip without pointer	1 5/8"	1/4"	H, J, G, K, L
✔ 5111	✔ 5111A	Finger-grip with pointer	2 3/8"	1/4"	H, J, G, K, L
✤ 5112	✤ 5112A	Finger-grip without pointer	2 3/8"	1/4"	H, J, G, K, L
✔ 5150	✤ 5150A	Finger-grip	1 1/2"	1/4"	H, J, G, K, L
✔ 5151	—	Finger-grip	3/4"	1/8"	C, E
—	✔ 5152A	Like 5104 (shorter pointer)	3 1/4"	1/4"	H, J, G, K, L

DIALS

Handsomely finished, black-enameled, aluminum dials for Ohmite rheostats and tap switches. Figures and lines are etched on a black background for contrast and ease of readability. On rheostat dials, divisions indicating approximate percentage of rheostat resistance in circuit are marked from 0 to 100. On tap switch dials, Number of dial positions are identical with number of switch positions.

For rheostats

For tap switches

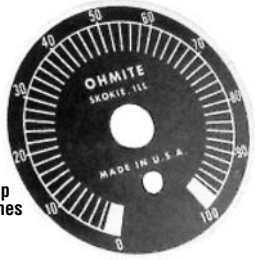

Part No.	For model	For knob	Dial dia.
✔ 5007	C, E	5151	1 1/4"
✔ 5000	H, J, G, K, L	5150, 5116, 5103	2 3/16"
✔ 5001	P, N, R, U	5104, 5106	5 1/2"
✔ 5002-*	111, 212 (single), 312 (single)	5109, 5116, 5150	2 3/4"
✔ 5003-*	212 (tandem), 312 (tandem), 412	5111, 5152A	3 3/4"
✔ 5004-*	608	5104	5 1/2"

* Specify number of positions as suffix.

Solid State Power Controls

PCA models for AC outputs
PCD models for DC outputs

Ohmitrol Power and Motor Speed Controls are solid state units which provide an infinitely smooth power control over their entire voltage range. An integral internal trimmer on some models allows customization of the control to a specific application by a simple turn of a screwdriver.

Power and motor speed controls are extremely versatile from an AC source; either AC or DC outputs are possible with the appropriate model. Model PCA, AC output, has applications to control heaters (both resistive and infrared) and motors such as universal and shaded pole, and can replace transformers. Model PCD, DC output, can be used to control shunt and series wound, universal, compound and permanent magnet motors, magnetic clutches, brakes, etc.

PCA/PCD Style

FEATURES

- AC and DC output types
- Component styles
- On-Off switch built in
- Internal trimmer on PCA and PCD models
- Adjustable control range

SPECIFICATIONS

Output: PCA models have an AC output. PCD models have two DC outputs: one output from an AC source is rectified DC at approximately full line voltage, the other output is variable or controlled DC. (DC models have terminals at the rear of the unit which accept quick connectors.)

Adjustable control range: On PCA and PCD models an internal trimmer allows the starting point of the control voltage to be set anywhere within the stated trimmer voltage range with a screwdriver.

Armature current: For PCD models, 500 mA min. for proper operation.

Knobs/Dials: All power controls on this page accept part number 5000 dial and any knob with a quarter-inch hole (part numbers 5102, 5103, 5103A, 5106, 5106A, 5107, 5109, 5109A, 5110, 5110A, 5111, 5111A, 5112, 5112A, 5116, 5116A, 5150, 5150A and 5152A)

NOTE: For panel mount use under full power output conditions, the face of the control must be in contact with a metal panel. For optimum heat dissipation, a thermal-conducting compound must be applied to the face of the power control prior to mounting.

Model	Load (watts)	Input (volts)	Frequency (Hz)	Output range (VAC, nom.)	Trimmer range (volts)
Component style (Ohmitrol) 2.03" x 1.77" x 1.75" *(51.6 x 45.0 x 44.5 mm)*					
✔ **PCA1000**	1000W 8.3A AC	120VAC	60HZ	0-120VAC	10-50V
✔ **PCA1050**	15A AC	120VAC	60HZ	0-120VAC	10-75V
✣ **PCA1100**	1000W 8.3A AC	120VAC	50HZ	0-120VAC	10-50V
✔ **PCA1020**	2000W 8.3A AC	240VAC	60HZ	0-240VAC	20-100V
✣ **PCA1120**	2000W 8.3A AC	240VAC	50HZ	0-240VAC	20-100V
2.03" x 2.77" x 1.75" *(51.6 x 70.4 x 44.5 mm)*					
✔ **PCD1000**	3.5A DC to 6.0A DC	120VAC	60HZ	0-120VDC	10-50V
✣ **PCD1100**	3.5A DC to 6.0A DC	120VAC	50HZ	0-120VDC	10-50V
✣ **PCD1020**	3.5A DC to 6.0A DC	240VAC	60HZ	0-240VDC	20-100V
✣ **PCD1120**	3.5A DC to 6.0A DC	240VAC	50HZ	0-240VDC	20-100V

✔ = Standard values
✣ = Non-standard values subject to minimum handling charge per item

Check product availability at **www.ohmite.com**

To see the latest in resistor technology click on the "What's New" tab at ohmite.com

Dec-Ranger™

Decade Resistance Selector

Model No. 3416

A precision, ±0.1% accuracy, decade resistance box. The unit has a sturdy metal housing, universal binding posts and a grounded metal post for effective shielding.

FEATURES

- Rotary tap switches operate in either direction.
- Direct digital readout.

SPECIFICATIONS

Power: 1/4 watt per resistor.
Accuracy: ±0.1% (plus 0.03 ohms maximum contact and circuit resistance)
TC of resistors: ±20 PPM/°C
Number of decades: 6
Range: 1 ohm thru 1,111,110 ohms in 1 ohm increments
Switch life: in excess of 50,000 operations
Dimensions: 10 1/2" wide, 3 3/4" high, 4 5/8" deep
Weight: 3 lbs. 10 oz.

Ohm-Ranger®

Resistance Selector

Model No. 3420

An economical, portable resistance selector with a range to over 11,000,000 ohms, in 1 ohm increments. Has three binding posts, one to ground the case.

FEATURES

- Sliding switches.
- Handy slimline size.
- Rugged metal construction.

SPECIFICATIONS

Power: 0.5 watts (Do not exceed 250V).
Accuracy: ±1.0% (10 ohms and over).
±5.0% (9.99 ohms and under).
Number of decades: 7
Range: 1 ohm thru 11,111,110 ohms in 1 ohm increments.
Weight: 13 oz.

Cap-Ranger®

Capacitance Selector

Model No. 3430

An economical, portable capacitance selector with three binding posts, one to ground the metal case.

FEATURES

- Sliding switches
- Handy compact size
- Rugged metal construction

SPECIFICATIONS

Accuracy: ±2%.
Maximum voltage: 200 VDC.
Residual capacitance: 60 pf (typical).
Range: 100 picofarads to 11.111 microfarads in 100 picofarad steps.
Dimensions: 4" x 6" x 1".
Weight: 13 oz.

Product Weights

Series	Part Number Prefix	Weight Each (Grams)
10 Series	12	0.490
	13	0.976
	15	3.188
10 Series	12	0.568
	13	1.023
	15	3.295
20 Series	20	5.455
	21	0.56
	22	0.62
	23	0.909
	25	1.477
	27	4.3
Ohmicone (40 Series)	40	7.5
	41	0.227
	42	0.682
	43	0.909
	45	2.955
	47	6.1
90 Series	90	5.455
	91	0.6
	92	0.795
	93	1.136
	95	1.591
Power Tap Switch	312	360.909
A Series	AW	5.1
	AX	8.7
	AY	18.4
	AZ	36.9
Axiohm	5C	0.21
G Series	GW10J	8.437
	GW13J	9.888
Metal Plate Current Sense	602SJR	0.257
	605SJR	0.116
	610SJR	0.39
80 Series	83F (RW79U)	0.909
Metal-Mite (89 Series)	850 (RE75G)	278.182
Brown Devil (200 Series)	B8	4.733
Dividohm (210 Series)	D12	8.864
	D50	40.909

Series	Part Number Prefix	Weight Each (Grams)
Econo-Mox	EW1	0.7
	EW2	1.334
	EW3	2.052
	EX1	0.527
	EX2	0.86
270 Series	L175	242.727
	L225	303.409
	L25	20.455
	L50	42.273
Low Value Thick Film	LVC06	0.01
	LVC20	0.024
	LVC25	0.039
Macro Chip	MC102	0.205
Metal Devil	MJ	0.16
	MK	0.16
	ML	0.43
	MM	0.75
Mini Macro Chip	MMC06	0.002
	MMC08	0.005
	MMC12	0.009
	MMC25	0.04
Micro-Mox	MOX-037 E24	0.491
	MOX-037 E24/E9	0.491
Maxi-Mox	MOX-1-12	4.091
Mini-Mox	MOX200	0.2
	MOX300	0.35
	MOX-400-23	0.455
	MOX-750-23	0.682
Power-Mox	MOX-F	44.917
	MOX-G	67.615
	MOX-H	90.909
	MOX-J	120
Little Demon	OA	1.2
	OD	0.222
	OF	0.422
Little Rebel	OJ	0.16
	OK	0.25
	OL	0.43
	OM	1.14
	ON	1.7

Series	Part Number Prefix	Weight Each (Grams)
OX/OY	OX	1.45
	OY	2.52
Surface Mount Power	RC0R5DB	1.14
	RC0S2CA	0.33
	RC0S2CA	0.33
	RF0S8BA	0.14
	RF1S0CA	0.33
	RP1R5CB	0.62
	RP1S3CA	0.33
	RP1S5CB	0.62
	RP2R0DA	0.74
	RP2S0DA	0.74
	RW1S0BA	0.24
Four Terminal Current Sense	RW1S0CK	0.291
Surface Mount Power	RW1S5CA	0.56
	RW2R0CB	0.62
	RW2R0DA	0.74
	RW2S0CB	0.62
	RW2S0DA	0.74
	RW3R0DB	1.14
	RW3R5EA	1.75
Slim-Mox	SLIM-MOX100	0.45
	SLIM-MOX101	0.682
	SLIM-MOX102	0.795
	SLIM-MOX103	0.92
	SLIM-MOX104	1.023
	SLIM-MOX106	1.403
	SLIM-MOX108	1.623
	SLIM-MOX202	1.023
	SLIM-MOX204	1.818
	SLIM-MOX206	2.386
	SLIM-MOX208	2.51
	SLIM-MOX210	2.89
	SLIM-MOX306	1.84
	SLIM-MOX308	3.28
	SLIM-MOX310	3.85
	SLIM-MOX404	2.51
	SLIM-MOX406	3.28
	SLIM-MOX408	4.04
	SLIM-MOX410	4.81
Super Mox	MOX910	0.425
	MOX920	0.567
	MOX930	0.709
	MOX940	5.67

Series	Part Number Prefix	Weight Each (Grams)
TA Series	TA025	1.47
	TA050	13.2
	TA100	25.48
TAP1000	TA1K	466.667
TA Series	TA203	0.833
	TA205	1.47
	TA207	2.09
	TA303	0.883
	TA305	1.47
	TA307	2.09
	TA310	2.57
	TA605	1.47
	TA805	1.47
TAP600	TAP600	120
TO220 Surface Mount	TDH35	1.38
Series TDH35	TDH35	1.38
TFS	TFSA	0.8
	TFSB	0.7
	TFSC	0.45
	TFSD	0.25
	TFSE	0.2
	TFSF	0.15
TGH	TGHG	1.418
	TGHH	1.418
	TGHL	1.418
WFH	WFH160	105
	WFH220	158
	WFH330	210
	WFH90	53
WL Series	WLC	0.726
Rheostats	H	84.091
	J	142.045
	G	252.273
	K	294.545
	L	478.03
	P	895.455
	N	1,245.46
	R	2814
	U	4536

To see the latest in resistor technology click on the "What's New" tab at ohmite.com

Application Notes

Resistor Selection

RESISTOR FACTS AND FACTORS

A resistor is a device connected into an electrical circuit to introduce a specified resistance. The resistance is measured in ohms. As stated by Ohm's Law, the current through the resistor will be directly proportional to the voltage across it and inversely proportional to the resistance.

The passage of current through the resistance produces heat. The heat produces a rise in temperature of the resistor above the ambient temperature. The physical ability of the resistor to withstand, without deterioration, the temperature attained, limits the operating temperature which can be permitted. Resistors are rated to dissipate a given wattage without exceeding a specified standard "hot spot" temperature and the physical size is made large enough to accomplish this.

Deviations from the standard conditions ("Free Air Watt Rating") affect the temperature rise and therefore affect the wattage at which the resistor may be used in a specific application.

SELECTION REQUIRES 3 STEPS

Simple short-cut graphs and charts in this catalog permit rapid determination of electrical parameters. Calculation of each parameter is also explained. To select a resistor for a specific application, the following steps are recommended:

1. (a) Determine the Resistance.
   (b) Determine the Watts to be dissipated by the Resistor.
2. Determine the proper "Watt Size" (physical size) as controlled by watts, volts, permissible temperatures, mounting conditions and circuit conditions.
3. Choose the most suitable kind of unit, including type, terminals and mounting.

STEP 1 DETERMINE RESISTANCE AND WATTS

Ohm's Law

(a) $R = \frac{V}{I}$ or $I = \frac{V}{R}$ or $V = IR$

Ohm's Law, shown in formula form above, enables determination of the resistance when the required voltage and current are known. When the current and voltage are unknown, or the best values not decided on, at least two of the three terms in Ohm's Law must be measured in a trial circuit.

(b) $P = I^2R$ or $P = VI$ or $P = \frac{V^2}{R}$

Power in watts, can be determined from the formulas above, which stem from Ohm's Law. R is measured in ohms, V in volts, I in amperes and P in watts.

Why Watts Must Be Accurately Known

Stated non-technically, any change in current or voltage produces a much larger change in the wattage (heat to be dissipated by the resistor). Therefore, the effect of apparently small increases in current or voltage must be investigated because the increase in wattage may be large enough to be significant. Mathematically, the wattage varies as the square of the current, or voltage, as stated in the formulas (b). For example, an increase of 20% in current or voltage will increase the wattage 44%. Figure 1 below graphically illustrates the square law relation. Hence, the actual current must be used in figuring the wattage and the increase in wattage due to apparently small changes, then determined in order to select the proper size resistor. Allowance should be made for maximum possible line voltage.

Subscribe to our
New Product Bulletin at
ohmite.com

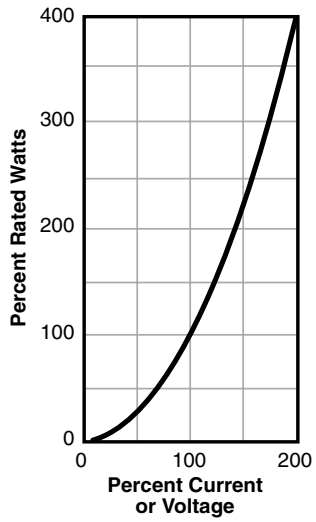

Fig. 1: Rapid increase of wattage with current or voltage.

STEP 2 POWER RATING OR PHYSICAL SIZE OF RESISTOR

A resistor operated at a constant wattage will attain a steady temperature which is determined largely by the ratio between the size (surface area) and the wattage dissipated, The temperature stabilizes when the sum of the heat loss rates (by radiation, convection and conduction) equals the heat input rate (proportional to wattage). The greater the resistor area per watt to be dissipated, the greater the heat loss rate and therefore the lower the temperature rise. The relation between the losses varies for different resistors.

Free Air Watt Rating

The wattage rating of resistors, as established under specified standard conditions, is defined as the "Free Air Rating" ("Full Rating" or "Maximum Power Rating"). Several standard methods of rating are in use based on different service conditions. The method of both the "National Electrical Manufacturers Association" (NEMA) and the "Underwriters' Laboratories, Inc." (UL) can be described as follows:

The relation of the "Free Air Watt Rating" of tubular type, vitreous enameled resistors to the physical size, is to be set at such a figure that when operated at their rated watts, the temperature rise of the hottest spot shall not exceed 300°C (540°F) as measured by a thermocouple when the temperature of the surrounding air does not exceed 40°C (104°F). The temperature is to be measured at the hottest point of a two-terminal resistor suspended in free still air space with at least one foot of clearance to the nearest object, and with unrestricted circulation of air.

A slightly different definition of temperature limit used as a basis for wattage rating, and which results in a slightly higher attained temperature, was originally established in military specification MIL-R-26 for wirewound resistors.

Characteristic V resistors are required to dissipate rated wattage in an ambient of 25°C without exceeding a maximum operating temperature of 350°C at the hottest spot. This corresponds to a temperature rise of 325°C in a 25°C ambient. Although MIL-R-26 permits a 25°C greater temperature rise than NEMA or UL, the reference ambient for the latter two is 15°C higher. Consequently, the difference in attained temperature between the two systems is only 10°C. The curves in Fig. 2 show the relation between temperature rise and wattage for various specifications. Note the differences in the permissible rise for each specification.

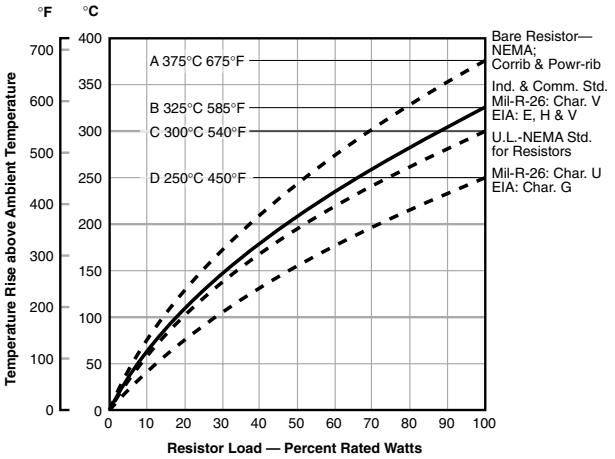

Fig. 2: Approximate hot spot temperature rise of a resistor in free air for various specifications.

The absolute temperature rise for a specific resistor is roughly related to the area of its radiating surface. It is also dependent upon a number of other factors, however, such as thermal conductivity of the core and coating materials, emissivity factor of the outer surfaces, ratio of length to diameter, heat-sink effect of mountings, and other minor factors.

The maximum permissible operating temperature for a given resistor is basically determined by the temperature limitations imposed by the materials used in its construction. Generally speaking, these limits cannot be sharply defined in terms of temperature alone. Other factors such as resistance stability versus time, deterioration rates of insulation and moisture-resistance characteristics, type and size of resistance wire, all enter into consideration of "acceptable service life."

For these reasons, the precise temperature limits corresponding to 100% rated wattage are somewhat arbitrary and serve primarily as design targets. In the last analysis, once a wattage rating has been assigned on the basis of an empirical hot spot limit, the verification of its correctness must be established through long term load-life tests based on performance and stability standards rather than the measurement of hot spot temperature. Maximum limits are stipulated for parameter changes as a result of various tests, including a 2000 hour load-life test.

It is also assumed that the temperature rise at a given wattage is independent of the ambient temperature in which this wattage is being dissipated. Therefore, for high ambient temperatures, the operating wattage should be limited in accordance with the curves of Fig. 3. Although the assumption that temperature rise is independent of ambient is not exactly true, the approximation is sufficiently close for all practical purposes and, therefore, has been adopted for derating purposes.

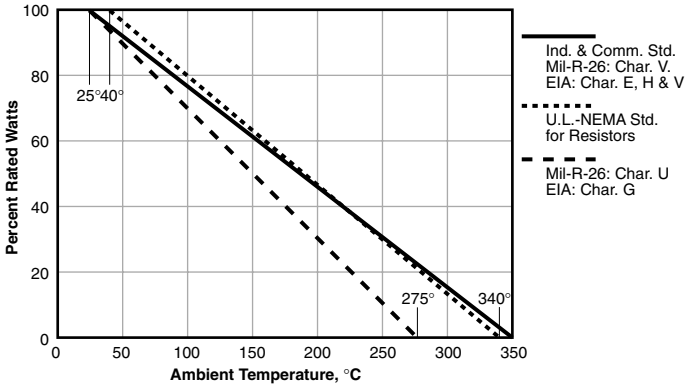

Fig. 3: Derating for ambient temperature.

Despite the above variables, figures may be cited in terms of "watts dissipated per square inch of winding surface" for a given temperature rise. For power type resistors operating at 300°C rise above ambient, this figure varies between approximately 6.3 watts per square inch for large resistors (175 watt) to about 9 watts per square inch for smaller resistors (12 watt). It should also be observed from Fig. 2 that temperature rise is not directly proportional to wattage dissipated. Note, for example, that at 50% rated wattage, the temperature rise still remains about 70% of that at full rating.

The wattage ratings used in this catalog, unless otherwise stated for certain types, are on the basis of a nominal operating temperature of 350°C at full rating. There are two general categories of power resistors for which the 350°C nominal temperature limit does not apply. One is that class of power-precision resistors where high stability is a salient feature, in which case the operating temperature is nominally limited to 275°C. The other category includes all exposed ribbon wire resistors (see description of Corrib® and Powr-Rib®) which are rated for 375°C (675°F) maximum temperature rise when measured on the wire per NEMA standards.

Temperature Distribution on a Resistor

The temperature rise varies (following a curve) along the length of the resistor with the hot spot at the center-top (of a horizontal tube) and the ends at approximately 60% of the maximum temperature rise. The terminals themselves are still cooler. When the resistor is vertical, the hot spot shifts upwards a little and the top end is hotter than the bottom. The standard "Free Air Watt Rating," however, is used regardless of position.

Resistor Selection

STEPS 3 SELECT A RESISTOR

Choose the most suitable resistor meeting the requirements of the application. Standard resistors carried in stock should be considered first. If a suitable resistor cannot be found in the standard sizes or resistance values, then select a non-standard resistor from the range on available sizes (consult factory).

APPLICATION WATT RATING

To allow for the differences between the actual service conditions and the "Free Air Watt Rating" it is a general engineering practice to operate resistors at more or less than the nominal rating. The details by which such ratings can be estimated are given in the following pages. Most thermal calculations, however, involve so many factors which are usually not accurately known, that at best they are only approximations.

The most accurate method of determining or checking the rating is to measure the temperature rise in a trial installation. A thermocouple (made of #30 B & S gage wire) is recommended for the measuring element. Even measurements made with a thermocouple will vary slightly with different samples and techniques. The factors which affect the temperature rise act independently of each other and are summarized as follows:

1. Ambient Temperature
As the maximum permissible operating temperature is a set amount, any increase in the ambient temperature subtracts from the permissible temperature rise and therefore reduces the permissible watt load.

2. Enclosure
Enclosure limits the removal of heat by convection currents in the air and by radiation. The walls of the enclosure also introduce a thermal barrier between the air contacting the resistor and the outside cooling air. Hence, size, shape, orientation, amount of ventilating openings, wall thickness, material and finish all affect the temperature rise of the enclosed resistor.

3. Grouping
When resistors are close to each other they will show an increased hot spot temperature rise for a given wattage because of the heat received by radiation from each other and the increased heat per unit volume of air available for convection cooling.

4. Altitude
The amount of heat which air will absorb varies with the density, and therefore with the altitude above sea level. At altitudes above 100,000 feet, the air is so rare that the resistor loses heat practically only by radiation.

5. Pulse Operation
This is not an environmental condition but a circuit condition. As a pulse of power, when averaged over the total on and off time, results in less heat per unit time than for continuous duty, the temperature rise is affected. This may permit higher power during the pulses. The conditions must be expertly considered for conservative rating. The open-wound "Powr-Rib®" resistor construction is most suitable.

6. Cooling Air
Forced circulation of air over a resistor removes more heat per unit time than natural convection does and therefore permits an increased watt dissipation. Liquid cooling and special conduction mountings also can increase the rating.

7. Limited Temperature Rise
It is sometimes desirable to operate a resistor at a fraction of the Free Air Watt Rating in order to keep the temperature rise low. This may be to protect adjacent heat sensitive apparatus, to hold the resistance value very precisely both with changing load and over long periods of time and to insure maximum life.

8. Other Considerations
High Resistance. High resistance units, which require the use of very small diameter wire, generally should operate at reduced temperature for maximum reliability.

High Voltage
A maximum voltage gradient of 500 volts R.M.S. (705 volts peak) per inch of winding length is recommended under normal conditions. For higher gradients in pulse applications or for other special conditions such as oil immersion, consult factory.

High Frequency
Non-inductively wound resistors are generally required for use at high frequencies.

Military and Other Specifications
The special physical operating and test requirements of the applicable industrial or military specification must be considered. Military specification resistors should be ordered by their MIL numbers.

Our friendly Customer Service team can be reached at 866-9-OHMITE

ENVIRONMENTAL FACTORS—EFFECT ON THE POWER RATING OF COMPONENTS

All the components of an electrical apparatus — resistors, rheostats, capacitors, transformers, chokes, wiring, terminal boards, rectifiers, transistors, electronic tubes, etc.—have their own limitations as to the maximum temperature at which they can reliably operate. The attained temperature in service is the sum of the ambient temperature plus the temperature rise due to the heat dissipated in the apparatus.

The temperature rise of a component is affected by a number of factors. The graphs and discussions which follow, amplify and supplement the factors on the previous page.

Note that the Multiplying Factors given on the Short Cut Chart, on page 96 are the reciprocals of the "Percent Load Ratings" shown on the graphs in this section. The percent figures are, of course, expressed as decimals before finding the reciprocals.

Ambient Temperature Derating

Fig. 4 shows the percent of full load which power resistors can dissipate for various high ambient temperatures.

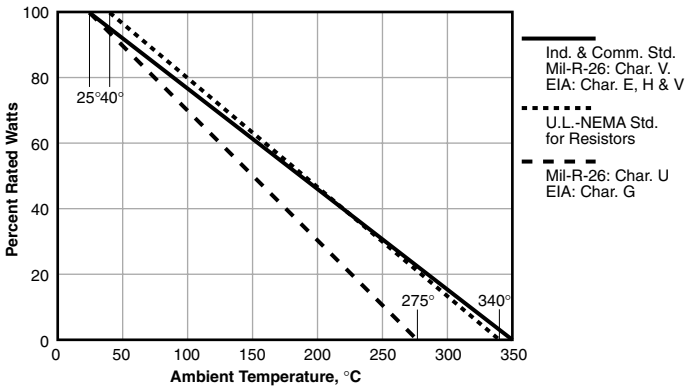

Fig. 4: Derating of Resistors for High Ambient Temperatures.

Derating Due to Enclosure

The amount of derating required, if any, because of enclosure is affected by a number of factors, most of which are hard to determine accurately. The watts per square inch of surface, size, shape, orientation, wall thickness, material, finish and amount and location of ventilating openings all play a part. Fig. 5 serves to indicate for a particular set of conditions how the temperatures varied with the size of enclosure for a moderate size power resistor.

Derating Due to Grouping

The temperature rise of a component is affected by the nearby presence of other heat-producing units, such as resistors, electronic tubes, etc. The curves in Fig. 6 show the power rating for groups of resistors with various spacings between the closest points of the resistors, assuming operation at maximum permissible hot spot temperature. If resistors are to be operated at lower hot spot temperatures, the amount of derating for grouping can be reduced.

Derating for Altitude

The curve in Fig. 7 shows the proportional watts for various altitudes, assuming standard atmospheric conditions.

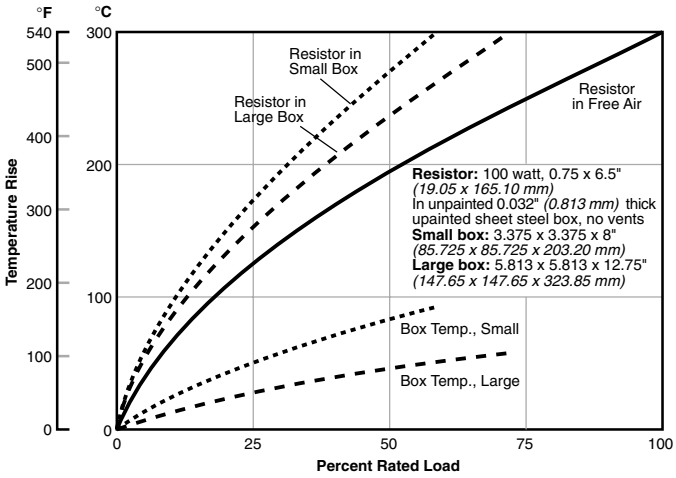

Fig.5: Example of Effect of Size of Enclosure on Temperature Rise of An Enclosed Resistor.

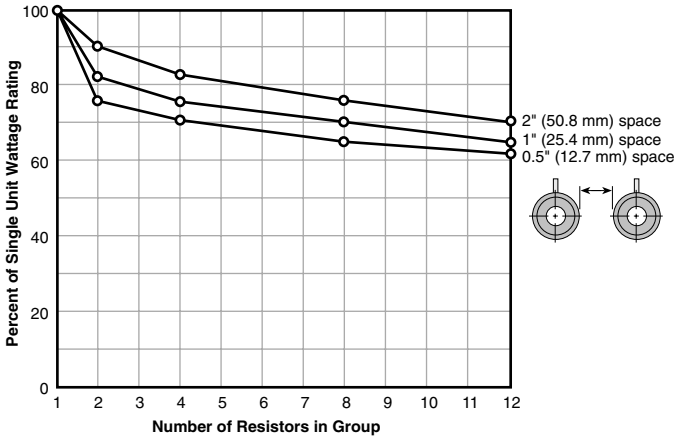

Fig.6: Derating of Resistors to Allow for Grouping

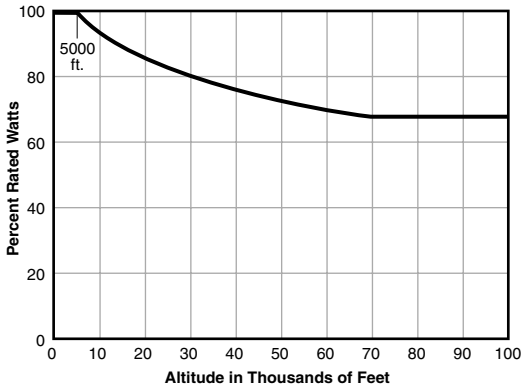

Fig. 7: Derating for Altitude

Resistor Selection

Pulse Operation

Unlike the environmental factors, which result in reduction of the watt rating, pulse operation may permit higher power in the pulses than the continuous duty rating.

The NEMA has set up certain standard duty cycles for motor control resistors and the resistor ratings for some of these conditions are shown in Fig. 8.

The curves in Figures 10,11,12 and 13 illustrate the more general case of various combinations of on and off time for specified loads up to 1000% for a continuous series of pulses. Intermediate loads can be approximated by interpolation. The "on-time" at which each curve flattens out also indicates the maximum on-time for single pulses (with enough off-time for cooling to ambient). Additional data on single pulses is given by Fig. 9. Resistors will reach about 75% of the rated maximum temperature rise in approximately 5 to 8 pulses and level off at maximum rise in another 10 to 20 cycles, depending on percent load, size, type, etc. Any curve passing above the intersection of the designated on and off-times indicates a percent load which can be used. A resistor operated at the rating of an interpolated curve through the point of intersection would operate at maximum rated temperature rise.

The exact temperature rise, of course, varies with each resistor, depending on size, ohms winding, etc. The curves shown indicate the approximate rise for typical units only, as a band or range of values actually exists for each percent load.

Ratings at over 1000% are not recommended except for Powr-Rib® resistors. Curves for intermediate size resistors can be roughly estimated by comparison with the sizes given.

Ratings for single pulses in the milli-second range (and up to 1 to 2 seconds) require individual calculation. This is because the ratings vary greatly with the resistance, or more specifically with the actual weight and specific heat of the resistance alloy used. Calculation is based on the assumption that all of the heat generated in the pulse goes to raise the temperature of the resistance wire.

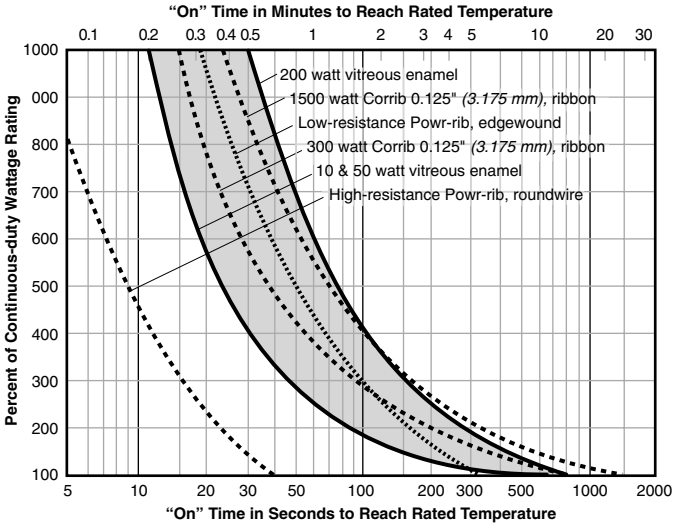

Fig. 9: Time Required for Typical Resistors to Reach Rated Operating Temperatures at Various Watt Loads.

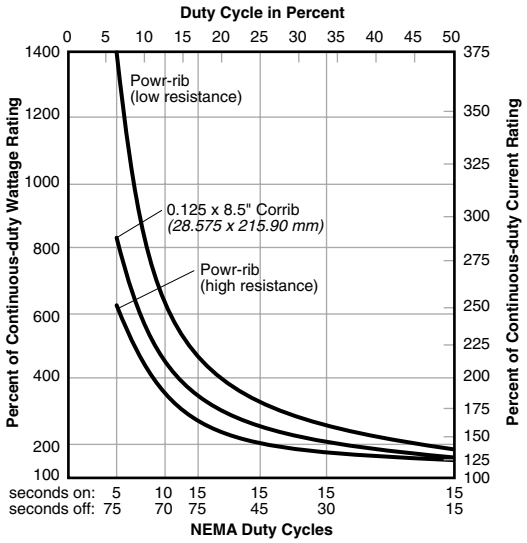

Fig. 8: Percent of Continuous Duty Rating for Resistors for Typical NEMA Duty Cycles.

Our friendly Customer Service team can be reached at 866-9-OHMITE

PULSE OPERATION — COOLING — LIMITED TEMPERATURES

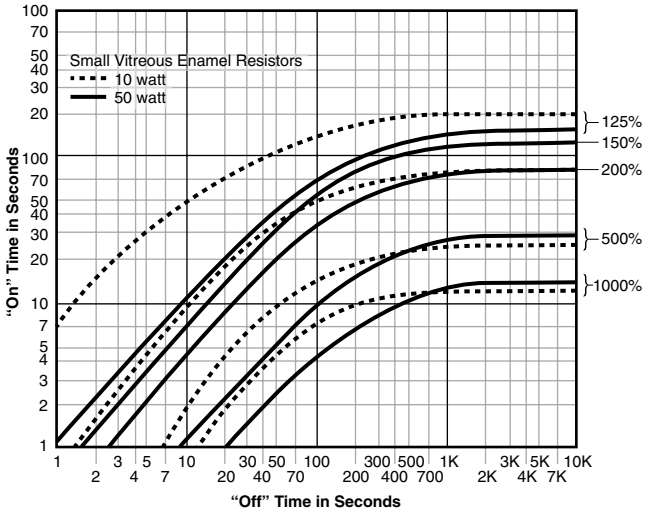

Fig. 10: 10 Percent of Continuous Duty Rating for Pulse Operation of small to Medium Size Vitreous Enameled Resistors.

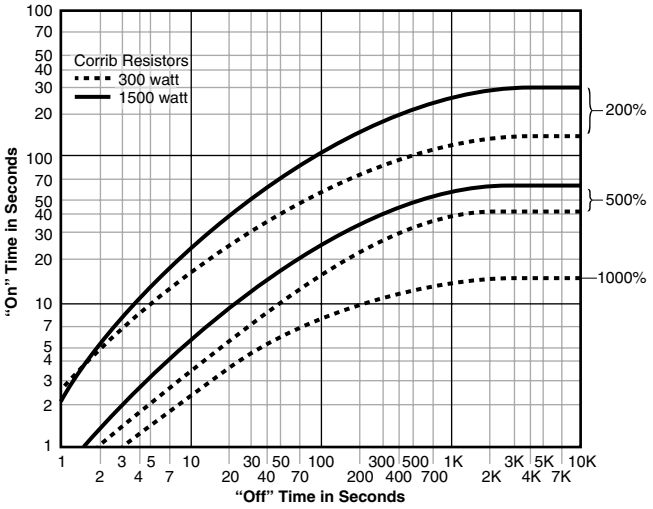

Fig.12: Percent of Continuous Duty Rating for Pulse Operation of CORRIB®, Corrugated Ribbon Resistors.

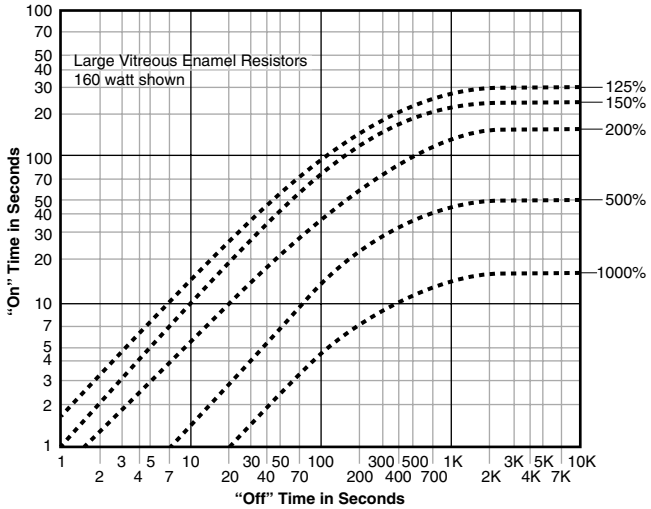

Fig. 11: Percent of Continuous Duty Rating for Pulse Operation of Large Vitreous Enameled Resistors.

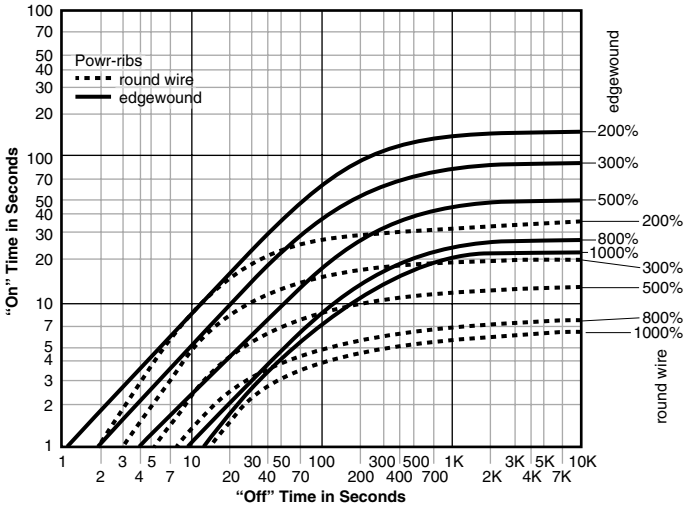

Fig. 13: Percent of Continuous Duty Rating for Pulse Operation of Powr-Rib®, Bare Resistors

Cooling Air

Resistors can be operated at higher than rated wattage when cooled by forced circulation of air. A typical curve is illustrated in Fig 14. The curve tends to level off at higher velocities as excessive hot spots develop where the air flow does not reach all parts uniformly.

Limited Temperature Rise

When it is desired to operate a resistor at less than maximum temperature rise, the percent watts for a given rise can be read from "Temperature Rise vs. Resistor Load" Fig 2 graph on page 91.

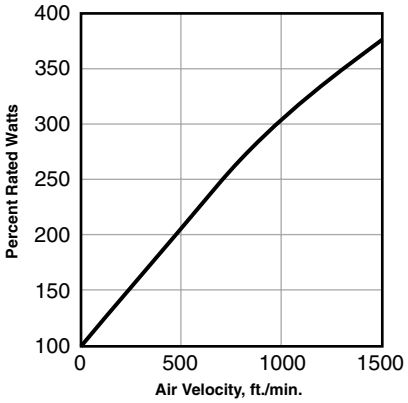

Fig. 14: Percent of Free Air Rating for Typical Resistor Cooled by Forced Air Circulation.

Application Notes

Resistor Selection

SHORT-CUT CHART METHOD TO FIND REQUIRED SIZE (as affected by application conditions)

1. For each Condition, locate the relevant value on the scales below and record the corresponding Factor (F_1 to F_7). Note: The Standard Free Air Condition Factor is always 1.
2. Multiply the Factors together.
3. Multiply the Watts by the product obtained from 2 above.

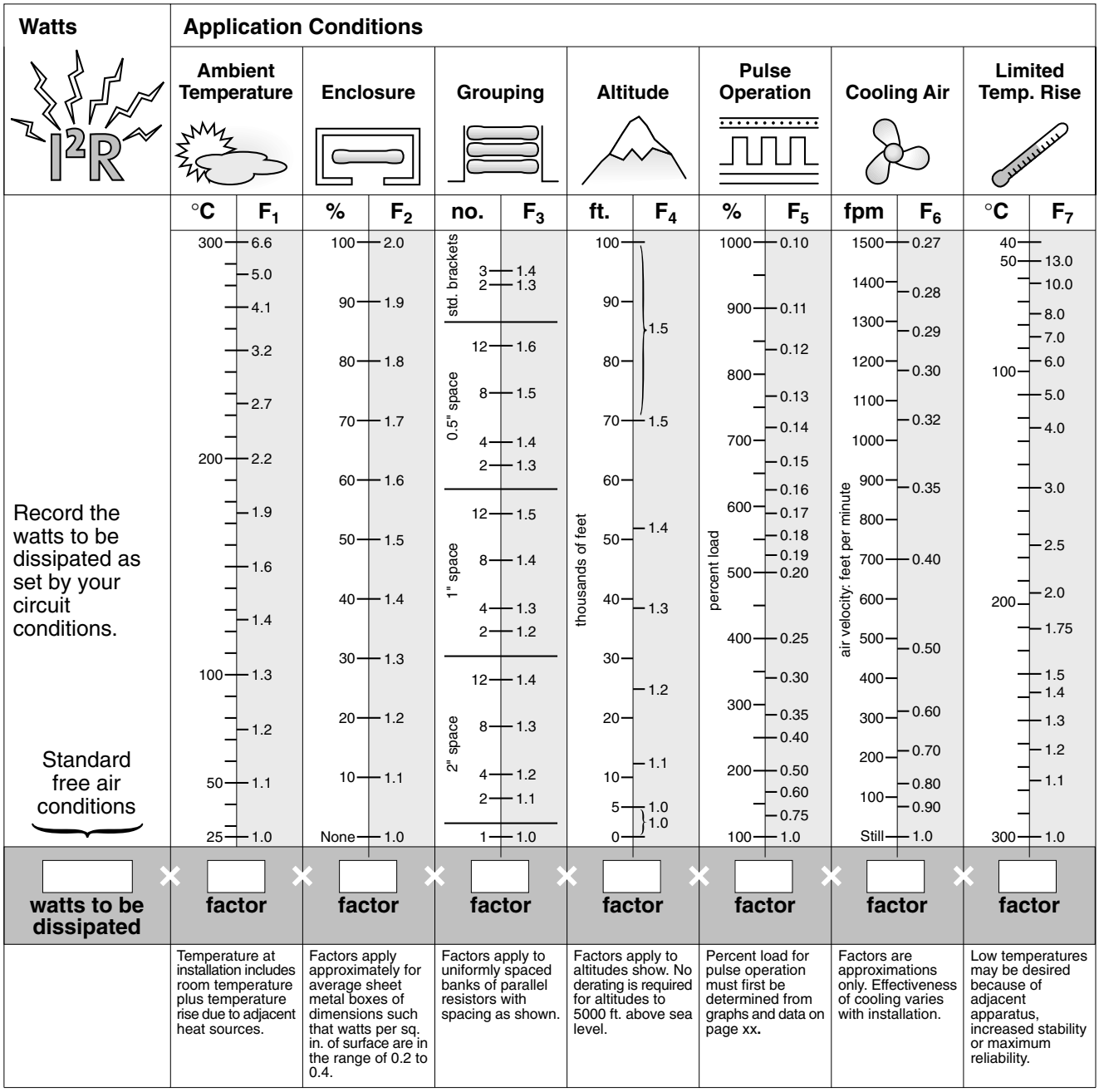

EXAMPLE

Four resistors, each dissipating 115 watts, are to be mounted in a group. Spacing is to be 2" surface to surface. Ambient to be 50°C (122°F). Enclosure to be total. Other factors standard. Determine Watt Size required.

Operation (1) On Ambient Temperature scale locate 50°C. Note and record F_1 = 1.1 as shown. Locate and record the other factors.

F_1		F_2		F_3		F_4		F_5		F_6		F_7
50°		100%		4@2"				Standard Conditions				
1.1	x	2.0	x	1.2	x	1	x	1	x	1		1

Operation (2) Multiply the factors together = 2.64

Operation (3) 115 Watts x 2.64 = 304 Watts Free Air Watt Size Rating required for each resistor.

TEMPERATURE COEFFICIENT OF RESISTANCE

The resistance alloys used for all except the lowest ohmic values show such little change with temperature that in most power circuits the resistance is considered constant. Actually there may be changes at full load of -4% to +8% of the initial resistance. The change is attributed in most part to the "temperature coefficient of resistance" (TCR) which is the change in resistance expressed as "parts per million per degree centigrade of temperature" (ppm/°C).

For special applications which require very constant resistance, it may be necessary to specify the maximum permissible TCR for the range of temperature involved. This would limit the choice of wire to only certain types of resistance alloys. The commonly known low TCR alloys in the 800 ohms per circular-mil-foot class consist largely of nickel and chromium alloyed with small amounts of aluminum and either copper or iron. Other low resistivity alloys, 294 ohms per circular-mil-foot, consist primarily of nickel and copper with only traces of other metals.

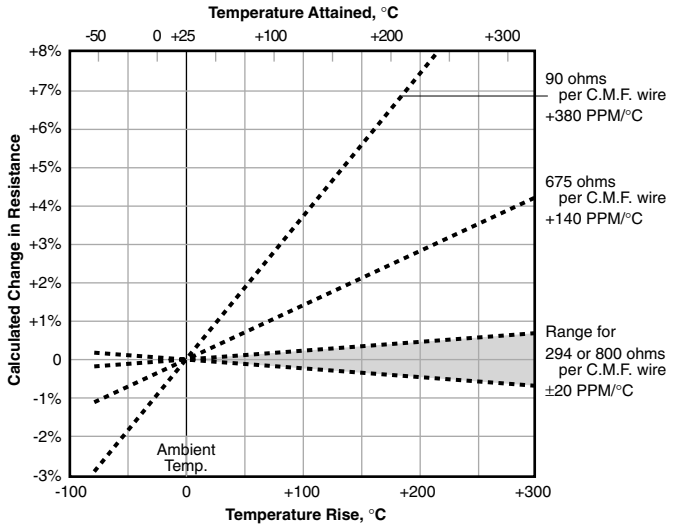

Fig. 15: Calculated change in resistance with nominal TC assumed constant.

Both of these wire classes are rated by the wire manufacturers as having a TCR of 0±20ppm/°C. The expression "0±20ppm/°C" implies that, although the nominal value of the TCR is zero, the actual value may lie anywhere within the tolerance range of –20ppm/°C to +20ppm/°C.

For other resistance wires such as the widely used nickel-chromium-iron, for example, a nominal value of +140ppm/°C is given. Actually, however, a tolerance of ±30ppm is applicable so that the TCR may range between the limits of +110 to +170ppm/°C.

Unfortunately, the TCR of a completed power resistor is generally somewhat different from that of the original wire. This is because the TCR may be affected by such factors as heat treatment during processing, and materials and methods of construction. Without special controls and precautions, the TCR over the range of 25°C to 300°C rise may increase to as much as 0±80ppm from the original 0±20ppm for certain types of wire on vitreous enameled resistors. Theoretical changes in resistance with temperature are shown in Fig. 15.

The circuit designer should carefully consider the actual needs of the circuit before specifying limits on the TCR of a desired resistor. Wherever possible it is best to select a resistor for a critical application so that it operates at a low temperature rise. This will also provide the maximum stability over a long period. For low TCR (and other) applications, Ohmite can provide resistors with an "Ohmicone" (silicone-ceramic) coating. "Ohmicone" is processed at much lower temperatures than vitreous enamel and therefore makes control of TCR and tolerance easier. Data on the TCR and other properties of various alloys is given on page 98.

Resistor Selection

RESISTANCE ALLOYS AND USES

A number of different resistance alloys are used in winding resistors and rheostats as shown in Fig. 16. The general use for each alloy is indicated by the column headed, "Resistance Range for Which Used." Whether a particular alloy can be used on a specific resistor can be estimated by dividing the given resistance by the area of the given winding space and determining whether the quotient falls within the limits given hereafter. The "high resistance" alloys cover the range from approximately 10 to 25,000 ohms per square inch of winding area, the "low to medium" type from 5 to 400 ohms and the "very low resistance" alloys from less than an ohm to 250 ohms. It should be noted that the "Ohms per Square Inch" ranges overlap considerably, indicating that in many instances a given resistor could use any of several alloys. Both the upper and lower limits of the ranges are only approximate and in general can be extended somewhat when necessary.

The actual temperature coefficient of a complete resistor is generally greater than the nominal for the wire alone. The approximate change in overall resistance at full load is shown in the table.

Other Alloys

In addition to the alloys tabulated which show small changes in resistance with temperature, there are others which sometimes have to be used for very low resistance units. These alloys have higher temperature coefficients, which limit their use to applications where the change in resistance with load is not important. An example is No. 60 alloy, which has a resistance of 60 ohms per circular-mil-foot and a temperature coefficient of +700ppm/°C.

Ballast Wire

There are other alloys which are selected especially for their high temperature coefficient of resistance. These are used for so-called "ballast" resistors where a large change in resistance is desired with a change in load. A typical ballast wire is Nickel, which has 58 ohms/cmf and a temperature coefficient of +4800ppm/°C. Others are "Hytemco" and "Balco" at 120 ohms/CMF and a TC of +4500pp /°C.

ASTM Alloy Class*	Alloy Composition (Approximate)	Ohms per CMF	Trade Names	Mean Temp Coeff. of Res. ppm/°C	Temperature Range for TCR °C	Resistance Range for Which Used	Average Resistance Change at Full Load**
1a	Nickel base, non-magnetic Ni 75%, Cr 20% plus Al, Cu, Fe, etc.	800	Evanohm Karma Moleculoy Nikrothal L	0 ± 20	-65 to + 250	Very high, Medium and up, for low temp. coeff.	Under ± 1% to ± 2%
1b		800		0 ± 10	-65 to + 150		
2a	Iron base, magnetic Fe 73%, Cr 22.5%, Al 4.5% (plus Co in one alloy)	800	Alloy 815-R Kanthall Dr Mesaloy	0 ± 20	-65 to + 200	Alternate sometimes for Class 1	Under ± 1% to ± 2%
2b		800		0 ± 10	0 to + 150		
3a	Nickel-Chromium 80% — 20%	650	Chromel A Nichrome V Nikrothal B Protoloy A Tophet C	+ 80 ± 20	-65 to + 250	High and medium	+ 4 to + 5%
3b		675		+ 60 ± 20			
4	Nickel-Chromium-Iron 60%—16%—24%	675	Chromel C Electroloy Nichrome Nikrothal 6 Tophet C	+ 140 ± 30	-65 to + 200	High and medium	+ 5 to + 8%
5a	Copper-Nickel 55% — 45%	300	Advance Copel Cupron Cuprothal 294 Neutroloy	0 ± 20	-65 to + 150	Low and low to medium for low temp. coeff.	Under ± 1% to ± 2%
5b				0 ± 40			
6	Manganin 13% Mn, 87% Cu	290	Manganin	0 ± 15	+ 15 to + 35	Low and low to medium for low TC near 25°C	Under ± 1% to ± 2%**
7	Copper-Nickel 77% — 23%	180	180 Alloy Cuprothal 180 Midohm	+ 180 ± 30	-65 to + 150	Very low	+ 5% to + 8%
9	Copper-Nickel 90% — 10%	90	90 Alloy 95 Alloy Cuprothal 90	+ 450 ± 50	-65 to + 150	Very low	+ 5% to + 10%

*American Society for Testing Materials. Tentative Specification B267-68.
**For resistor with 300°C hot spot rise from 25°C ambient except 54°C rise for Manganin.

Fig. 16: Table of Resistance Alloys Generally Used for Resistors and Rheostats.

Application Notes

Preferred Standard Resistance Values

The resistance values listed below and their decimal multiples have been designated as standard by the International Electrotechnical Commission (IEC). This listing ensures that every possible resistance value within its respective tolerance range is represented. The omission of a resistance value does not necessarily mean that Ohmite cannot manufacture the desired value.

Please contact Ohmite at 866-964-6483 or sales@ohmite.com for resistance values not shown in this table.

1% Tol. **E96 Values** (Plus 250Ω and 500Ω)	5% Tol. **E24 Values** (Plus 25Ω and 50Ω)	10% Tol. **E12 Values** (Plus 25Ω and 50Ω)	20% Tol. **E6 Values** (Plus 25Ω and 50Ω)	1% Tol. **E96 Values** (Plus 250Ω and 500Ω)	5% Tol. **E24 Values** (Plus 25Ω and 50Ω)	10% Tol. **E12 Values** (Plus 25Ω and 50Ω)	20% Tol. **E6 Values** (Plus 25Ω and 50Ω)	1% Tol. **E96 Values** (Plus 250Ω and 500Ω)	5% Tol. **E24 Values** (Plus 25Ω and 50Ω)	10% Tol. **E12 Values** (Plus 25Ω and 50Ω)	20% Tol. **E6 Values** (Plus 25Ω and 50Ω)
100	10	10	10	255				523			
102				261				536			
105				267				549			
107					27	27			56	56	
110	11			274				562			
113				280				576			
115				287				590			
118				294				604			
	12	12			30			619			
121				301					62		
124				309				634			
127				316				649			
130	13			324				665			
133					33	33	33		68	68	68
137				332				681			
140				340				698			
143				348				715			
147				357				732			
150	15	15	15		36			750	75		
154				365				768			
158				374				787			
	16			383				806			
162					39	39			82	82	
165				392				825			
169				402				845			
174				412				866			
178				422				887			
	18	18			43			909			
182				432					91		
187				442				931			
191				453				953			
196				464				976			
200	20				47	47	47				
205				475							
210				487							
215				499							
	22	22	22	500	50	50	50				
221					51						
226				511							
232											
237											
	24										
243											
249											
250	25	25	25								

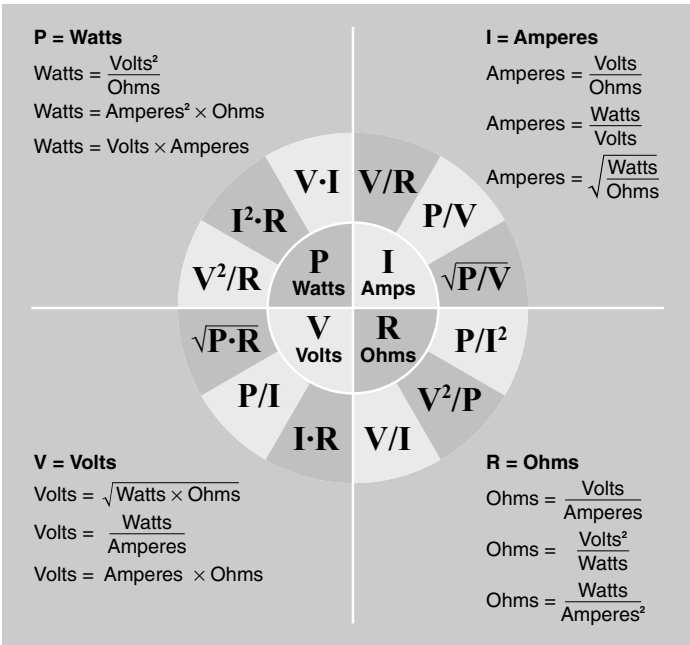

Application Notes

Ohm's Law

Ohm's Law defines the relationships between (P) power, (V) voltage, (I) current, and (R) resistance. One ohm is the resistance value through which one volt will maintain a current of one ampere.

I Current is what flows on a wire or conductor like water flowing down a river. Current flows from negative to positive on the surface of a conductor. Current is measured in (A) amperes or amps.

V Voltage is the difference in electrical potential between two points in a circuit. It's the push or pressure behind current flow through a circuit, and is measured in (V) volts.

R Resistance determines how much current will flow through a component. Resistors are used to control voltage and current levels. A very high resistance allows a small amount of current to flow. A very low resistance allows a large amount of current to flow. Resistance is measured in ohms.

P Power is the amount of current times the voltage level at a given point measured in wattage or watts.

Application Notes

Resistor Terminology

Adjustable Resistor: A resistor so constructed that its resistance can be readily changed.*

Alternating Current: A periodic current the average value of which over a period is zero. The equation for alternating current is the same as that for a periodic current except that I_0=O*

Ambient Temperature: The temperature of the surrounding coiling medium, such as gas or liquid, which comes into contact with heated parts of the apparatus.*

Ampere: The unit of constant current which, maintained in two parallel rectilinear conductors of infinite length separated by a distance of one meter, produces between these conductors a force equal to $2x10^{-7}$ mks (meter-kilogram-second) units of force per meter of length.

Armature Resistor: A resistor connected in series with the armature of a motor either to limit the inrush current on starting, the gradual short circuiting of which brings the motor to normal speed, or to regulate the speed by armature-voltage control.

Axiohm†: Centohm® Coated axial terminal wire-wound resistor.

Bracket Terminal Resistor: A resistor equipped with slotted metal end j brackets that serve as a means of mounting and connecting to the resistor.

Capacitance: That property of a system of conductors and dielectrics which permits the storage of electricity when potential differences exist between the conductors. Its value is expressed as the ratio of a quantity of electricity to a potential difference. A capacitance value is always positive.*

Capacitor: A device, the primary purpose of which is to introduce capacitance into an electric circuit. Capacitors are usually classified, according to their dielectrics, as air capacitors, mica capacitors, paper capacitors, etc.*

Clearance: The shortest distance through space between two live parts, between live parts and supports or other objects, or between any live part and grounded part.

Conduction: The transmission of heat or electricity through, or by means of, a conductor.

Conductor: A body so constructed from conducting material that it may be used as a carrier of electric current.*

Continuous Duty: A requirement of service that demands operation at a substantially constant load for un indefinitely long time.*

Continuous-Duty Resistor: A resistor that is capable of carrying continuously the current for which it is designed without exceeding the specified temperature rise.

Continuous Rating: Continuous rating is the rating that defines the load which can be carried for an indefinitely long time.*

Convection: Convection is the motion resulting in a fluid owing to differences of density and the action of gravity.

Corrib®†: A tubular resistor consisting of an alloy resistance ribbon, crimped and edgewound on a ceramic core, the ribbon being securely and permanently fastened to the core by vitreous enamel or cement.

Creepage Distance: The shortest distance between conductors of opposite polarity or between a live part and ground as measured over the surface of the supporting material.

Current-limiting Resistor: A resistor inserted into an electric circuit to limit the flow of current to some predetermined value. Note: A current-limiting resistor, usually in series with a fuse or circuit breaker, may be employed to limit the flow of circuit or system energy at the time of a fault or short-circuit.*

Dielectric Strength: The dielectric strength of an insulating material is the maximum potential gradient that the material can withstand without rupture.* It is usually specified in volts per unit thickness.

Dielectric Test: A test which consists of the application of a voltage higher than the rated voltage for a specified time for the purpose of determining the adequacy against breakdown of insulating materials and spacings under normal conditions.*

Direct Current: A unidirectional current in which the changes in value are either zero or so small that they may be neglected. A given current would be considered a direct current in some applications, but would not necessarily be so considered in other applications.*

Dividohm®†: A resistor with a bare side and clamp for adjustment.

Edgeohm†: A high-current resistor made of an alloy resistance ribbon wound on edge forming an oval-shaped coil supported by grooved insulators which space adjacent turns and insulate them from the support bars. Support bars are secured to steel end pieces forming a sturdy resistor suitable for continuous-and-intermittent-duty applications.

EIA: Electronic Industries Alliance.

Electromotive Force: The electromotive force is the agency causing the flow of current in a circuit. It is the electrical pressure (or drop) measured in volts.

Farad: The unit of capacitance of an electric condenser in which a charge of one coulomb produces a difference of potential of one volt between the poles of the capacitor.

Ferrule Resistor: A resistor supplied with ferrule terminals for mounting in standard fuse clips.

Field Discharge Switch: A switch usually of the knife blade type having auxiliary contacts for connecting the field of a generator or motor across a resistor (field discharge) at the instant preceding the opening of the switch.

Fixed Resistor: A resistor designed to introduce only one set amount of resistance into an electrical circuit.

Henry: The unit of inductance of a closed circuit in which an electromotive force of one volt is produced when the electric current traversing the circuit varies uniformly at the rate of one ampere per second.

Hot Spot: The point or location of maximum temperature on the external surface of a resistor.

Inductance: The (scalar) property of an electric circuit or of two neighboring circuits which determines the electromotive force induced in one of the circuits by a change of current in either of them.*

Impedance: The apparent resistance of an AC circuit, being the combination of both the resistance and reactance. It is equal to the ratio of the value of the EMF between the terminals to the current, there being no source of power in the portion under consideration. The unit of impedance is the ohm and is represented by Z.

Intermittent Duty: A requirement of service that demands operation for alternate intervals of (1) load and no-load; or (2) load and rest; or (3) load, no-load and rest; such alternate intervals being definitely specified.*

Intermittent-Duty Resistor: A resistor capable of carrying for a short period of time the high overload current for which it is designed without exceeding the specified temperature rise.

Machine-Duty Resistor: A resistor for use in the armature or rotor circuit of a motor in which the armature current is almost constant.

Mega Ohm: A unit of resistance equal to one million ohms.

MIL Resistor: A resistor built in accordance with Joint Army-Navy specifications.

Multi-Section Resistor: A resistor having two or more electrically independent sections.

NEC: The National Electrical Code is the standard of the National Board of Fire Underwriters for electric wiring and apparatus as recommended by the National Fire Protection Association and approved by the American Standards Association.

NEDA: National Electronic Distributors Association.

NEMA: The National Electrical Manufacturers Association, a non-profit trade association, supported by the manufacturers of electrical apparatus and supplies. NEMA is engaged in standardization to facilitate understanding between the manufacturers and users of electrical products.

Nominal Diameter: As applied to tubular resistors, this is the diameter of the ceramic tube expressed in inches and/or fractions thereof.

Nominal Length: As applied to tubular resistors, this is the length of the resistor base or core expressed in inches and/or fractions thereof.

Non-Inductive Resistor: A non-inductive power resistor is one in which the inductance and distributed capacitance are reduced to an absolute minimum.

Ohm: A unit of resistance defined as the resistance at 0°C of a column of mercury of uniform cross-section having a length of 106.3 centimeters and a mass of 14.4 grams.

Ohmmeter: An instrument for measuring electric resistance that is provided with a scale graduated in ohms.

Periodic Duty: A type of intermittent duty in which the load conditions are regularly recurrent.*

Periodic Rating: The rating which defines the load which can be carried for the alternate periods of load and rest specified in the rating, the apparatus starting cold and for the total time specified in the rating without causing any of the specified limitations to be exceeded.*

Power: The time rate of transferring or transforming energy; the rate of doing work or expending energy.

Power Resistor: A resistor capable of dissipating 5 watts or more.

Rating: A designated limit of operating characteristics of a machine, apparatus or device, based on definite conditions.

Note 1: Such operating characteristics as load, voltage, frequency, etc., may be given in the rating.

*Note 2: The rating of control apparatus in general is expressed in volts, amperes, horsepower or kilowatts as may be appropriate, except that resistors are rated in ohms, amperes and class of service.**

Reactor: A device used for introducing reactance into a circuit for purposes such as motor starting, paralleling transformers and control of current.*

Rectifier: A device which converts alternating current to unidirectional current by virtue of a characteristic permitting appreciable flow of current in only one direction.*

Resistance: The (scalar) property of an electric circuit or of any body which may be used as part of an electric circuit which determines for a given current the rate at which electric energy is converted into heat or radiant energy and which has a value such that the product of the resistance and the square of the current gives the rate of conversion of energy. In the general case, resistance is a function of the current, but the term is most commonly used in connection with circuits where the resistance is independent of the current.*

Resistance Tolerance: The resistance tolerance of a power resistor is the extent to which its resistance may be permitted to deviate above or below the specified resistance. Resistance tolerance is usually expressed in percent.

Resistance Method of Temperature Determination: This method consists in the determination of temperature by comparison of the resistance of the winding at the temperature to be determined with the resistance at a known temperature.**

Resistive Conductor: A resistive conductor is a conductor used primarily because it possesses the property of high electric resistance.*

Resistivity: The resistivity of a material is the resistance of a sample of the material having specified dimensions.

Resistor: A device, the primary purpose of which is to introduce resistance into an electric circuit.*

Resistor Core: The resistor core or base of a power resistor is the insulating support on which the resistive conductor is wound.

Rheostat: An adjustable resistor so constructed that its resistance may be changed without opening the circuit in which it may be connected.*

Screw-Base Resistor: A power-type resistor equipped with Edison-type screw-base terminals for quick interchangeability.

Short-Time Rating: The rating that defines the load which can be carried for a short and definitely specified time, the machine, apparatus or device being at approximately room temperature at the time the load is applied.*

Silicone: A silicone coating meeting MIL-R-26 used on power type wirewound resistors.

Slim Mox A flat style resistor Ohmite manufactures. They are available in a variety of sizes and values.

Single-Wound Resistor: A resistor that has only one layer of resistance wire or ribbon wound around the insulating base or core.

Stackohm®†: A resistor consisting of a hollow ceramic core, oval in shape, about which resistance wire is wound and completely embedded in an insulating and heat conducting coating.

Still Air: Still air is considered air having no circulation except that created by the heat of the resistor which is being operated.

Tapped Resistor: A resistor with two or more steps.

Temperature Coefficient of Resistance: A measure of the increase or decrease in resistance of a resistive conductor due to change in temperature in parts per million (ppm).

$$R_T = R_r + [R_r(\alpha T - \alpha T_r)]$$

Where,

R_T = Resistance of conductor at temperature T

R_r = Resistance of conductor at reference temperature T_r

α = Temperature coefficient of resistance at reference temperature T_r

Temperature Rise: Temperature rise is the difference in temperature between the initial and final temperature of a resistor. Temperature rise is expressed in degrees C or F, usually referred to an ambient temperature. Temperature rise equals the hot spot temperature minus the ambient temperature.

Thermal Shock: Thermal shock consists of a sudden marked change in the temperature of the medium in which the device operates.

Thermocouple: A device for converting heat energy into electrical energy consisting of a pair of dissimilar conductors so joined as to produce a thermo-electric effect. It is used with a millivoltmeter to measure temperature rise in apparatus.

Thermometer Method of Temperature Determination: This method consists in the determination of the temperature by a mercury or alcohol thermometer, by a resistance thermometer, or by a thermocouple, any of these instruments being applied to the hottest part of the apparatus accessible to a mercury or alcohol thermometer.**

Tolerance (%) The tolerance is the allowable deviation from teh nominal resistance value.

Varying Duty: A requirement of service that demands operation at loads, and for intervals of time, both of which may be subject to wide variation.*

Voltage (V or E): The unit of measure is the volt. A unit of electrical pressure, EMF or potential difference. Ohmite's voltage rating is the voltage that can be applied to the resistor without arcing or degrading the resistor.

Voltage Coefficient (VCR) The unit of measure is in parts per million (ppm). Voltage coefficient defines the change in the value of the resistor that occurs as the voltage changes. The resistor is measured at two voltages and the deviation is then calculated. VCR is usually states as the change per volt (ex. 2ppm/v).

Watt: A unit of electric power. It is the power expended when one ampere of direct current flows through a resistor of one ohm.

Winding Pitch: The distance from any point on a turn of a resistive conductor to the corresponding point on an adjacent turn measured parallel to the long axis of the winding.

* ASA Standard

** NEMA Standard

† Ohmite trade name

RESISTANCE VALUES

Abbreviations and Part Numbering Structure

Prefix	Abbreviation		Part Numbering Structure	Numeric Value	Description		Scientific Notation
Milli	m	Thousandth	R001	0.001	1	Milli Ohm	1.0×10^{-3}
Centi	c	Hundredth	R010	0.01	1	Centi Ohm	1.0×10^{-2}
Deci	d	Tenth	R100	0.1	1	Deci Ohm	1.0×10^{-1}
—	—	One	1R00	1	1	Ohm	1.0×10^{0}
Deca, Deka	da	Ten	10R0	10	1	Deca Ohm	1.0×10^{1}
Hecto	h	Hundred	1000*	100	1	Hecto Ohm	1.0×10^{2}
Kilo	k	Thousand	1001*	1,000	1	Kilo Ohm	1.0×10^{3}
			1002*	10,000	10	Kilo Ohms	1.0×10^{4}
			1003*	100,000	100	Kilo Ohms	1.0×10^{5}
Mega	M	Million	1004*	1,000,000	1	Mega Ohm	1.0×10^{6}
			1504*	1,500,000	1.5	Mega Ohms	1.5×10^{6}
			1005*	10,000,000	10	Mega Ohms	1.0×10^{7}
			1006*	100,000,000	100	Mega Ohms	1.0×10^{8}
			1506*	150,000,000	150	Mega Ohms	1.5×10^{8}
Giga	G	Billion	1007	1,000,000,000	1	Giga Ohm	1.0×10^{9}
			1507	1,500,000,000	1.5	Giga Ohms	1.5×10^{9}
			1008	10,000,000,000	10	Giga Ohms	1.0×10^{10}
			1009	100,000,000,000	100	Giga Ohms	1.0×10^{11}
			1509	150,000,000,000	150	Giga Ohms	1.5×10^{11}
Tera	T	Trillion	100A	1,000,000,000,000	1	Tera Ohm	1.0×10^{12}
			150A	1,500,000,000,000	1.5	Tera Ohms	1.5×10^{12}
			100B	10,000,000,000,000	10	Tera Ohms	1.0×10^{13}

*Part Numbering Structure may vary by product line

United States Representatives

Alabama
Pinnacle Marketing, Inc.
sales@pinnacle-mktg.com
pinnacle-mktg.com
888-764-7640

Alaska
Quadra Sales Corporation
quadrawa@quadrasales.com
quadrasales.com
425-489-3428

Arizona
West Associates
sales@westassocaz.com
westassocaz.com
520-877-8456

Arkansas
Pro-Comp Sales Company
sales@procompsales.com
procompsales.com
972-669-1500

California - North
O'Donnell Associates
sales@odonnell.com
odonnell.com
408-456-2950

California - South
C & N and Associates, Inc.
cn@cnassoc.com
cnassoc.com
661-254-5844

California - San Diego
Gary Chilcote Associates
jim@chilcoteassociates.com
chilcoteassociates.com
760-504-0300

Colorado
English Damco Sales Co., Inc.
sales@englishdamco.com
englishdamco.com
303-695-0706

Connecticut
The MacInnis Company
sales@macinnis-company.com
macinnis-company.com
800-544-1014, 781-762-8090

Delaware
CTG Technical Sales, Inc.
cgamble@ctgsales.com
ctgsales.com
856-235-7007

Florida
Conley and Associates, Inc.
rsmith@conleyrep.com
conleyrep.com
407-365-3283

Georgia
Pinnacle Marketing, Inc.
sales@pinnacle-mktg.com
pinnacle-mktg.com
888-764-7640

Hawaii
Contact Factory
sales@ohmite.com
ohmite.com
866-964-6483 or 847-258-0300

Idaho
Quadra Sales Corporation
quadrawa@quadrasales.com
quadrasales.com
425-489-3428

Illinois - North
EAS / Power Tech
info@eassales.com
powertechsales.com
847-843-9700

Illinois - South
Contact Factory
sales@ohmite.com
ohmite.com
866-964-6483 or 847-258-0300

Indiana
Freedom Innovations Company
chadw@lifegrid.com
317-517-6467

Iowa
Contact Factory
sales@ohmite.com
ohmite.com
866-964-6483 or 847-258-0300

Kansas
Contact Factory
sales@ohmite.com
ohmite.com
866-964-6483 or 847-258-0300

Kentucky
Freedom Innovations Company
chadw@lifegrid.com
317-517-6467

Louisiana
Pro-Comp Sales Company
sales@procompsales.com
procompsales.com
972-669-1500

Maine
The MacInnis Company
sales@macinnis-company.com
macinnis-company.com
800-544-1014 or 781-762-8090

Maryland
CTG Technical Sales, Inc.
cgamble@ctgsales.com
ctgsales.com
856-235-7007

Massachusetts
The MacInnis Company
sales@macinnis-company.com
macinnis-company.com
800-544-1014 or 781-762-8090

Michigan - Lower Peninsula
Electronic Salesmasters Inc.
esi@salesmasters.com
216-831-9555

Michigan - Upper Peninsula
EAS / Power Tech
jerry@powertechsales.com
powertechsales.com
414-259-9103

Minnesota
Mel Foster Company
sales@melfoster.com
melfoster.com
952-941-9790

Mississippi
Pinnacle Marketing, Inc.
sales@pinnacle-mktg.com
pinnacle-mktg.com
888-764-7640

Missouri
Contact Factory
sales@ohmite.com
ohmite.com
866-964-6483 or 847-258-0300

Montana - East
English Damco Sales Co., Inc.
sales@englishdamco.com
englishdamco.com
303-695-0706

Montana - West
Quadra Sales Corporation
quadrawa@quadrasales.com
quadrasales.com
425-489-3428

Nebraska
Contact Factory
sales@ohmite.com
ohmite.com
866-964-6483 or 847-258-0300

Nevada - North
O'Donnell Associates
sales@odonnell.com
odonnell.com
408-456-2950

Nevada-South
West Associates
sales@westassocaz.com
westassocaz.com
520-877-8456

New Hampshire
The MacInnis Company
salesrep@macinnis-company.com
macinnis-company.com
800-544-1014, 781-762-8090

New Jersey - North
Win-Cor Electronic Sales Corp.
sales@win-cor.com
win-cor.com
973-890-5151

New Jersey - South
CTG Technical Sales, Inc.
cgamble@ctgsales.com
ctgsales.com
856-235-7007

New Mexico
West Associates
sales@westassocaz.com
westassocaz.com
520-877-8456

New York – City Metro
Win-Cor Electronic Sales Corp.
sales@win-cor.com
win-cor.com
973-890-5151

New York – Upstate
SennTec Sales, Inc.
info@senntec.com
senntec.com
585-425-3954

North Carolina
Pinnacle Marketing, Inc.
sales@pinnacle-mktg.com
pinnacle-mktg.com
888-764-7640

North Dakota
Mel Foster Company
sales@melfoster.com
melfoster.com
952-941-9790

Ohio
Electronic Salesmasters Inc.
esi@salesmasters.com
216-831-9555

Oklahoma
Pro-Comp Sales Company
sales@procompsales.com
procompsales.com
972-669-1500

Oregon
Quadra Sales Corporation
quadrawa@quadrasales.com
quadrasales.com
503-626-7550

Pennsylvania - East
CTG Technical Sales, Inc.
cgamble@ctgsales.com
ctgsales.com
856-235-7007

Pennsylvania - West
Electronic Salesmasters Inc.
esi@salesmasters.com
216-831-9555

Puerto Rico
Conley and Associates, Inc.
rsmith@conleyrep.com
conleyrep.com
407-365-3283

Rhode Island
The MacInnis Company
sales@macinnis-company.com
macinnis-company.com
800-544-1014 or 781-762-8090

South Carolina
Pinnacle Marketing, Inc.
sales@pinnacle-mktg.com
pinnacle-mktg.com
888-764-7640

South Dakota
Mel Foster Company
sales@melfoster.com
melfoster.com
952-941-9790

Texas
Pro-Comp Sales Company
sales@procompsales.com
procompsales.com
972-669-1500

Texas - El Paso
West Associates
sales@westassocaz.com
westassocaz.com
520-877-8456

Tennessee
Pinnacle Marketing, Inc.
sales@pinnacle-mktg.com
pinnacle-mktg.com
888-764-7640

Utah
English Damco Sales Co., Inc.
sales@englishdamco.com
englishdamco.com
303-695-0706

Vermont
The MacInnis Company
sales@macinnis-company.com
macinnis-company.com
800-544-1014 or 781-762-8090

Virginia
CTG Technical Sales, Inc.
cgamble@ctgsales.com
ctgsales.com
856-235-7007

Washington
Quadra Sales Corporation
quadrawa@quadrasales.com
quadrasales.com
425-489-3428

Washington DC
CTG Technical Sales, Inc.
cgamble@ctgsales.com
ctgsales.com
856-235-7007

West Virginia
Electronic Salesmasters Inc.
esi@salesmasters.com
216-831-9555

Wisconsin - East
EAS / Power Tech Sales
jerry@eassales.com
powertechsales.com
414-259-9103

Wisconsin - West
Mel Foster Company
sales@melfoster.com
melfoster.com
952-941-9790

Wyoming
English Damco Sales Co., Inc.
sales@englishdamco.com
englishdamco.com
303-695-0706

Ohmite International Representatives

EUROPEAN SALES OFFICE
Steadlands Int'l Mktg. Ltd.
Phone: +44 (0)870 900 60 96
Fax: +44 (0)870 900 60 97
ohmite@steadlands.com
steadlands.com

AUSTRALIA
Richardson Electronics
rell.com/international.asp

AUSTRIA
Novitronic Ges.m.b.H.
info@novitronic.co.at
novitronic.co.at

TTI, Inc.
ttiinc.com

BELGIUM
Richardson Electronics
rell.com/international.asp

BRAZIL
Richardson Electronics
rell.com/international.asp

CANADA
CanaREP Inc.
sales@canarep.com
canarep.com

TTI, Inc.
ttiinc.com

CHINA
Eteq
eteqcomp.com

ICD Asia Pte. Ltd.
michael.chee@icd-asia.com.sg
icd-asia.com.sg

Richardson Electroncs
rell.com/international.asp

TTI, Inc.
ttiinc.com

COLOMBIA
Richardson Electronics
rell.com/international.asp

DENMARK
Richardson Electronics
rell.com/international.asp

TTI, Inc.
ttiinc.com

EASTERN EUROPE
Richardson Electronics
rell.com/international.asp

FINLAND
Flinkenberg
flinkenberg.fi

Richardson Electronics
rell.com/international.asp

TTI, Inc.
ttiinc.com

FRANCE
Richardson Electronics
rell.com/international.asp

TTI, Inc.
ttiinc.com

GERMANY
Novitronic GmbH
info@novitronic.de
novitronic.de

Richardson Electronics
rell.com/international.asp

TTI, Inc.
ttiinc.com

INDIA
Simal International Pte., Ltd.
simal.com.sg

S.M. Creative Electronics Ltd.
Bangalore: smc_blr@smcel.com
Haryana: smcel@smcel.com
smcel.com

IRELAND
Richardson Electronics
rell.com/international.asp

TTI, Inc.
ttiinc.com

ITALY
DimacRed S.r.l.
dimac@dimacred.it
dimacred.it

Richardson Electronics
rell.com/international.asp

TTI, Inc.
ttiinc.com

JAPAN
Richardson Electronics
rell.com/international.asp

SOUTH KOREA
Richardson Electronics
rell.com/international.asp

MALAYSIA
Eteq
eteqcomp.com

ICD Asia Pte. Ltd.
michael.chee@icd-asia.com.sg

MEXICO
Richardson Electronics
rell.com/international.asp

TTI, Inc.
ttiinc.com

MIDDLE EAST
Richardson Electronics
rell.com/international.as

THE NETHERLANDS
A.V.E. Added Value Electronics, B.V.
info@ave-nl.com

Richardson Electronics
rell.com/international.asp

TTI, Inc.
ttiinc.com

NORWAY
Richardson Electronics
rell.com/international.asp

PHILLIPINES
Richardson Electronics
rell.com/international.asp

PORTUGAL
Richardson Electronics
rell.com/international.asp

SINGAPORE
Eteq
eteqcomp.com

ICD Asia Pte. Ltd.
michael.chee@icd-asia.com.sg

Simal International Pte., Ltd.
simal.com.sg

TTI, Inc.
ttiinc.com

SPAIN
Inelec
soporte@inelec.sarenet.es

Richardson Electronics
rell.com/international.asp

SOUTH AFRICA
TTI, Inc.
ttiinc.com

SWEDEN
Richardson Electronics
rell.com/international.asp

SWITZERLAND
Novitronic AG
info@novitronic.ch
novitronic.ch

TTI, Inc.
ttiinc.com

TAIWAN
Richardson Electronics
rell.com/international.asp

TTI, Inc.
ttiinc.com

THAILAND
Richardson Electronics
rell.com/international.asp

TURKEY
Richardson Electronics
rell.com/international.asp

UNITED KINGDOM
Richardson Electronics
rell.com/international.asp

TTI, Inc.
ttiinc.com

VENEZUELA
Cemmi C.A.
cemmi@attglobal.net

International customers can contact Ohmite at 1-847-258-0300 or sales@ohmite.com