EASii IC

POWER MANAGEMENT

CLOCK AND TIMING

DISCRETES

LOGIC

INTERFACING & TRANCEIVERS

PACKAGE OUTLINES

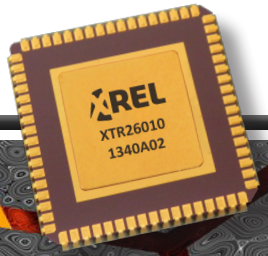

PRODUCT CATALOG

High Reliability and High Temperature Integrated Circuits
from -60°C to +230°C

SEPTEMBER 2021

XREL SEMICONDUCTOR

TABLE OF CONTENTS

About X-REL Semiconductor 4
Part Naming and Marking Codes 5

Power Management 6

XTR3001x PWM Controller 6
PLASTIC NEW XER30019 PWM Controler 8
NEW XTR3002x Buck DC/DC 9
XTR2041x 35V N-Channel Power MOSFET with Floating Driver 10
XTR2081x 80V Low-side N-Channel Power MOSFET with Driver 12
XTR7001x 1.5 A Low-Dropout Voltage Regulator 13
XTR7002x High Input Voltage 2A Positive LDO Regulator 14
XTR2602x Isolated Intelligent Gate Driver 16
XTR2501x Power Gate Driver 18
XTR2502x Intelligent Gate Driver 20
XTR2541x 35V Floating Driver 22
XTR7501x Positive Series Voltage Regulator 24
NEW XTR7503x Negative Series Voltage Regulator 26
XTR431 Programmable Shunt Regulator 28

Clock & Timing 30

XTR65x Versatile Timer 30
XTR6001x Crystal Oscillator Driver 32

Discretes 34

XTR1N04xx/XTR1N08xx General Purpose Diodes 34
XTR1K1210 10A, 1200V SIC Schottky Diode 36
XTR2N0x07 Small-Signal P- and N-Channel MOSFETs 37
XTR2N03xx/XTR2N05xx P-Channel Power MOSFETs 38
PLASTIC NEW XER2N0525 P-Channel Power MOSFETs 39
XTR2N04xx/XTR2N08xx N-Channel Power MOSFETs 40

Logic 42

XTR54000 Reconfigurable Logic Gates 42
XTR5001x Bidirectional Level Translators 44
XTR5417x/XTR541G7x Edge-Triggered D Flip-Flop 46

Interfacing & Transceivers 48

XTR4001x Isolated Two Channel Transceiver 48

PACKAGE OUTLINES 50

ABOUT X-REL SEMICONDUCTOR

X-REL Semiconductor, a division of EASii IC, designs innovative **High-Reliability & High-Temperature Integrated Circuits and systems for a wide range of application fields**. Our products are made to **reliably perform for years** while ensuring the **reduction of the overall system costs** all along the product lifecycle.

Easii IC is a fabless company working with worldwide recognized contractors which allows us to offer products of extreme reliability and quality.

Our network of distributors & representatives all around the world ensures the best technical and commercial support to our customers.

Thanks to the close relationship we keep with our customers, we are able to anticipate their needs offering the right solution at the right time.

Our commitment is on reducing their overall system costs. This is achieved by keeping in mind application constraints all along the definition, development and manufacturing of our products, shortening the learning curve and allowing an easy adoption. Our devices offer many functional features contributing to reduce the final system bill of material (BoM).

Headquarter

90, avenue Leon Blum BP 2612
38036 Grenoble Cedex 2
FRANCE
www.x-relsemi.com
Support : support.XREL@easii-ic.com
Sales : sales.XREL@easii-ic.com
Phone : +33 4 56 580 580

PART NAMING AND MARKING

XTR — **Process :**
XTR = HiTemp, HiRel
XER = Extended Temp, HiRel

NNNNN — **Part number**

Family 30: PWM Controller
Family 20, 25, 26: Drivers
Family 2N: Transistors
Family 1N & 1K: Diodes
431, 750xx, 700x: Regulators
40: Transceivers
50 : Level Shifter
54: Logic Gates
65 : Precision Timer
60: Clock & Timing

P — **Package type**

Ceramic :

- DIP8
- DIP14
- DIP16
- DIP24
- DIP28
- SOIC16
- SOIC24
- SOIC28
- DFP8
- DFP10
- LJCC28
- LJCC52

Metal :

- TO257
- TO254
- TO18

Plastic

- PQFP44
- PSOIC8

Part marking code

XREL
XTRNNNNN
YYWWANN

Part Naming and Marking Codes		
Part Reference : XTRNNNNN		
XTR	X-REL Semiconductor, high-temperature, high-reliability product (XTR Series -60°C to +230°C)	
XER	(XER Series -50°C to +175°C) **Plastic Package**	
NNNNN	Part number (0-9, A-Z).	
P	**Package type :** TD - Tested die D - Dual-in-line (DIP) S - Small outline (SOIC)	T - Transistor outline (TO) FE - Flat Pack with ePad LJ - J-formed leaded chip carrier Q - QFP
Unique Lot Assembly Code: YYWWANN		
YY	Two last digits of assembly year (e.g. 13 = 2013).	
WW	Assembly week (01 to 52).	
A	Assembly location code.	
NN	Assembly lot code (01 to 99).	

Example of part naming and marking :
XTR30011-S

XREL
XTR30011
2034B01

Part name 30011 from XTR Series. Assembled in week 34 of year 2020 in assembly location B with assembly lot number 01.

XTR3001X

PWM CONTROLLER

DESCRIPTION

XTR3001x is a family of small footprint PWM controllers designed for extreme reliability and high temperature applications such as DC/DC converters and PWM control. Being able to operate from input voltages as high as 35V, XTR3001x PWM controllers can run at frequencies as high as 800kHz, allowing the use of small footprint and low-cost external passive components.
Functionality features include internal oscillator and voltage reference, programmable soft-start, voltage tracking, synchronization capability, over-current protection and power-good flag.
Special design techniques were used to allow the XTR3001x parts to offer a precise, robust and reliable operation in critical applications. Full functionality is guaranteed from -60°C to +230°C, though operation well below and above this temperature range is achieved.
Parts from the XTR3001x family have all functional features to operate in buck, boost, buck-boost, flyback and push-pull modes.
Standard packaging options range from full-featured 24-lead packages to small footprint 8-lead packages.
XTR3001x family parts have been designed to reduce system cost and ease adoption by reducing the learning curve and providing smart and easy to use features.
Parts from the XTR3001x family are available in ruggedized SMT and thru-hole packages. Parts are also available as tested dies.

APPLICATIONS

- Reliability-critical, Automotive, Aeronautics & Aerospace, Down-hole.
- DC/DC converters, point-of-load power converters, switching power supplies, PWM control.

FEATURES

- Operational beyond the -60°C to +230°C temperature range.
- Supply voltage up to 35V.
- Monolithic PWM controller.
- Internal linear regulator with Under Voltage LOckout (UVLO).
- Input voltage feed-forward.
- Selectable asynchronous and pulse-skip modes.
- Selectable output signal polarity: active HIGH or LOW.
- Resistor programmable maximum duty cycle.
- Programmable integrated oscillator with synchronizing capability.
- Resistor-programmable soft-start period.
- Power-Good (PGood) flag.
- Programmable over-current protection level.
- Programmable polarity of over-current protection.
- Programmable minimum duty-ratio in pulse-skip mode.
- Voltage tracking capabilities.
- Shut-down mode.
- Interleaved mode for push-pull architectures.
- Forced bootstrap capacitor pre-charge mode.
- Latch-up free.
- Ruggedized SMT and thru-hole packages.
- Also available as tested dies.

TYPICAL APPLICATION DIAGRAM

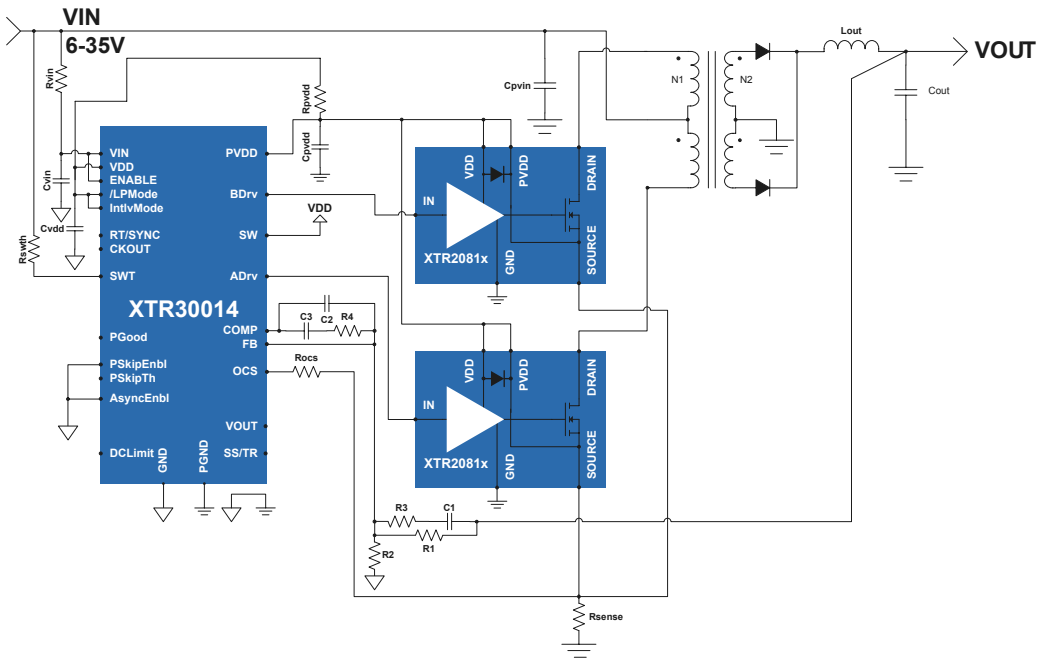

XTR3001X

PWM CONTROLLER

TYPICAL APPLICATION DIAGRAM

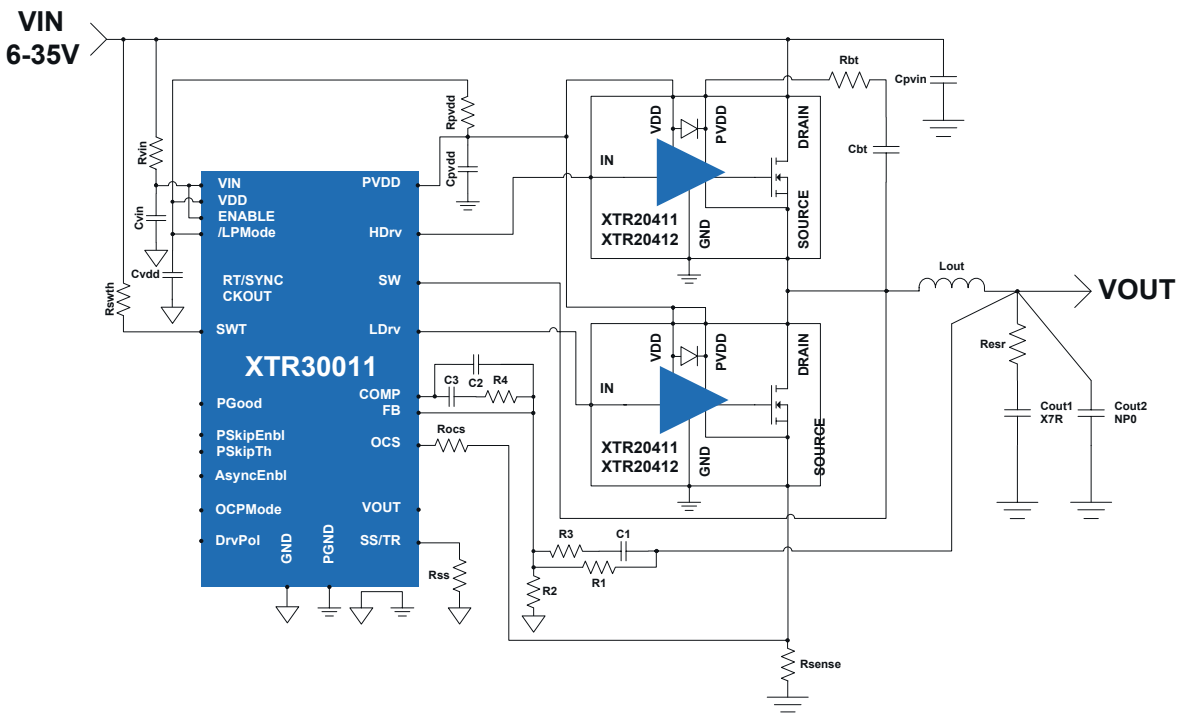

ORDERING INFORMATION:

Product		Package Material	Pin Count	Package	Operating Temperature	Functional mode				
Reference	Extension					Buck	Boost	Buck-boost	Flyback	Push-pull
XTR30010 -	TD	—	—	Tested Die	-60°C to +230°C	✓	✓	✓	✓	✓
XTR30011-	S	Ceramic	24	SOIC	-60°C to +230°C	✓	✓	✓	✓	
XTR30011-	D	Ceramic	24	Side-brazed DIP	-60°C to +230°C	✓	✓	✓	✓	
XTR30014-	S	Ceramic	24	SOIC	-60°C to +230°C		✓	✓	✓	✓
XTR30014-	D	Ceramic	24	Side-brazed DIP	-60°C to +230°C		✓	✓	✓	✓
XTR30015-	D	Ceramic	8	Side-brazed DIP	-60°C to +230°C	✓				
XTR30016-	D	Ceramic	8	Side-brazed DIP	-60°C to +230°C		✓	✓	✓	
XTR30017-	FE	Ceramic	10	Gull-wing flat pack with ePad	-60°C to +230°C	✓	✓	✓	✓	
XTR30018-	S	Ceramic	16	SOIC	-60°C to +230°C	✓	✓	✓	✓	✓

XER30019 NEW

PWM CONTROLLER

DESCRIPTION

XER30019 is a family of small footprint PWM controllers designed for extreme reliability and high temperature appli-cations such as DC/DC converters and PWM control. Being able to operate from input voltages as high as 35V, XER30019 PWM controllers can run at frequencies as high as 800kHz, allowing the use of small footprint and low-cost external passive components.
Functionality features include internal oscillator and voltage reference, programmable soft-start, voltage tracking, synchronization capability, over-current protection and power-good flag.
Special design techniques were used to allow the XER30019 parts to offer a precise, robust and reliable operation in critical applications. Full functionality is guaranteed from -50°C to +175°C.
Parts from the XER30019 have all functional features to operate in buck, boost, flyback and push-pull modes.

XER30019 parts have been designed to reduce system cost and ease adoption by reducing the learning curve and providing smart and easy to use features. Part is available in plastic package.

APPLICATIONS

- Reliability-critical, Automotive, Aeronautics & Aerospace, Down-hole.
- DC/DC converters, point-of-load power converters, switching power supplies, PWM control.

FEATURES

- Supply voltage up to 35V.
- Operational beyond the -50°C to +175°C temperature range.
- Monolithic PWM controller.
- Internal linear regulator with Under Voltage LOckout (ULVO).
- Input voltage feed-forward.
- Selectable asynchronous and pulse-skip modes.
- Selectable output signal polarity: active HIGH or LOW.
- Resistor programmable maximum duty cycle.
- Programmable integrated oscillator with synchronizing capability.
- Resistor-programmable soft-start period.
- Power-Good (PGood) flag.
- Programmable over-current protection level.
- Programmable polarity of over-current protection.
- Programmable minimum duty-ratio in pulse-skip mode.
- Voltage tracking capabilities.
- Shut-down mode.
- Interleaved mode for push-pull architectures.
- Forced bootstrap capacitor pre-charge mode.
- Latch-up free.
- Ruggedized SMT

TYPICAL APPLICATION DIAGRAM

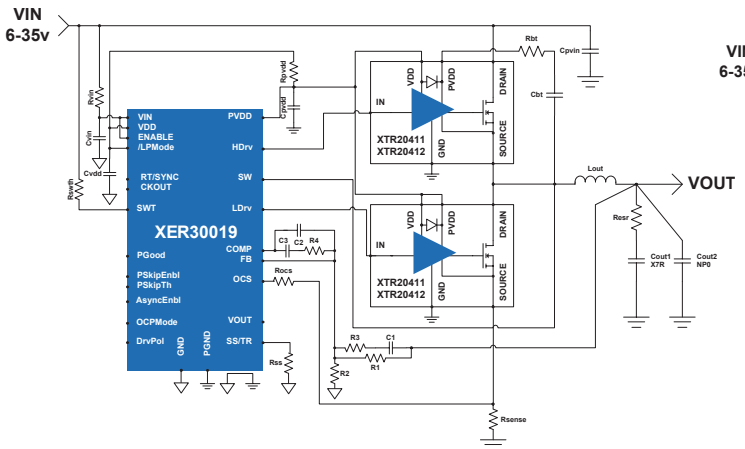

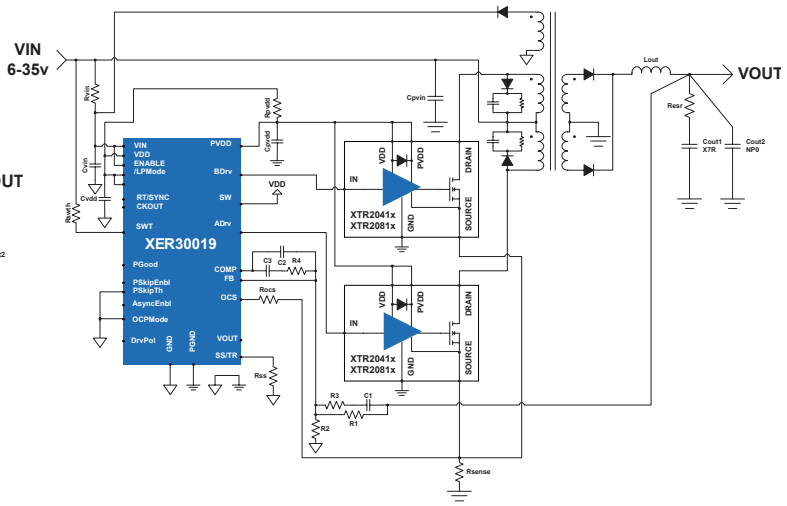

ORDERING INFORMATION:

Product		Package Material	Pin Count	Package	Operating Temperature	Functional mode			
Reference	Extension					Buck	Boost	Flyback	Push-pull
XER30019 -	Q	Plastic	44	Plastic QFP	-50°C to +175°C	✓	✓	✓	✓

XTR3002X NEW

BUCK DC/DC

DESCRIPTION

XTR3002x is a family of small footprint BUCK designed for extreme reliability and temperature applications such as DC/DC converters and PWM control. Being able to operate from input voltages as high as 35V, XTR3002x PWM controllers can run at frequencies as high as 800kHz, allowing the use of small footprint and low-cost external passive components.
Functionality features include internal oscillator and voltage reference, programmable soft-start, voltage tracking, synchronization capability, over-current protection and power-good flag.
Especial design techniques were used allowing the XTR3002x parts to offer a precise, robust and reliable operation in critical applications. Full functionality is guaranteed from -60°C to +230°C, though operation well below and above this temperature range is achieved.
Standard packaging options offer the possibility to operate in buck (XTR30021).
XTR3002x family parts have been designed to reduce system cost and ease adoption by reducing the learning curve and providing smart and easy to use features.
Parts from the XTR3002x family are available in ruggedized SMT package.

FEATURES

- Supply voltage up to 35V.
- Operational beyond the -60°C to +230°C temperature range.
- Monolithic BUCK.
- Under Voltage LOckout (UVLO).
- Input voltage feed-forward.
- Programmable integrated oscillator with synchronizing capability.
- Resistor-programmable soft-start period.
- Programmable over-current protection level.
- Voltage tracking capabilities.
- Shut-down mode.
- Latch-up free.
- Ruggedized SMT package.

APPLICATIONS

- Reliability-critical, Automotive, Aeronautics & Aerospace, Down-hole.
- DC/DC converters, point-of-load power converters, switching power supplies.

TYPICAL APPLICATION DIAGRAM

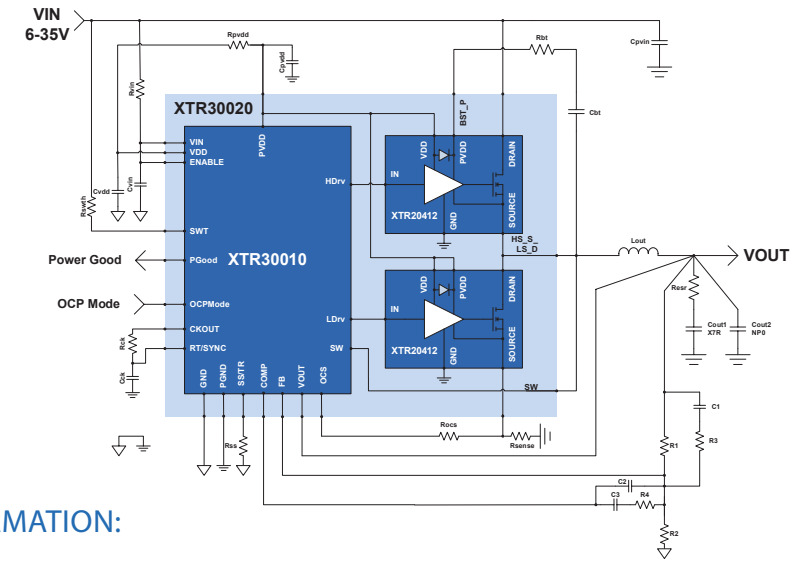

ORDERING INFORMATION:

Product		Package Material	Pin Count	Package	Operating Temperature
Reference	Extension				
XTR30021-	LJ	Ceramic	52	Leaded J Chip Carrier	-60°C to +230°C

XTR2041X

35V N-CHANNEL POWER MOSFET WITH FLOATING DRIVER

DESCRIPTION

XTR2041x is a family of extremely flexible power N-channel MOSFETs with integrated driver designed for extreme reliability and high temperature applications such as DC/DC converters, motor control and power switching. XTR2041x parts can be used either as high-side (35V max), low-side, or low-side switch with negative offset (-30V max) on the output stage (SOURCE connected to a negative voltage), while receiving a control input signal referenced to GND. XTR2041x parts can be directly driven by any 5V digital output, making them fully plug-and-play devices, avoiding any time consuming optimization of the matching network between driver and power transistor.
The XTR2041x family is composed of two different dies each with different maximum output current.
XTR2041x parts are robust to usual spikes associated with parasitic inductors and fast transients in switching applications.
Features of XTR2041x family parts include UVLO at the driver output, desaturation protection of the output transistor with soft shut-down functionality and possibility to select inversion of control signal.
Full functionality is guaranteed from -60°C to +230°C, though operation well beyond this temperature range is achieved. XTR2041x family parts have been designed to reduce system cost and ease adoption by reducing the learning curve and providing smart and easy to use features. The
Parts from the XTR2041x family are available in ruggedized SMD and through hole hermetic packages.

APPLICATIONS

- Reliability-critical, Automotive, Aeronautics & Aerospace, Down-hole.
- DC/DC converters, motor drive, switching power supplies, switching control.

FEATURES

- Operational beyond the -60°C to +230°C temperature range.
- Robust operation as low-side or high-side switch.
- Input-to-output level shifting from -30V to +35V.
- Standard Schmitt-trigger CMOS input.
- Exists in inverting and non-inverting versions
- Plug-and-play with any digital 5V output.
- Over current (desaturation) protection.
- Soft shut down.
- Under Voltage LOckout UVLO protection on the output stage .
- Low on-resistance :
  - XTR20411 : 1.13 Ω @ 230°C
  - XTR20412 : 0.33 Ω @ 230°C
- Large peak current capabilities:
  - XTR20411 : 3.9A @ 230°C
  - XTR20412 : 8.3A @ 230°C
- XTR20412A for positive application
- XTR20412B for negative application
- Low On- and Off-time (230nsec and 280nsec @ 230°C)
- Monolithic design.
- Latch-up free.

TYPICAL APPLICATION DIAGRAM

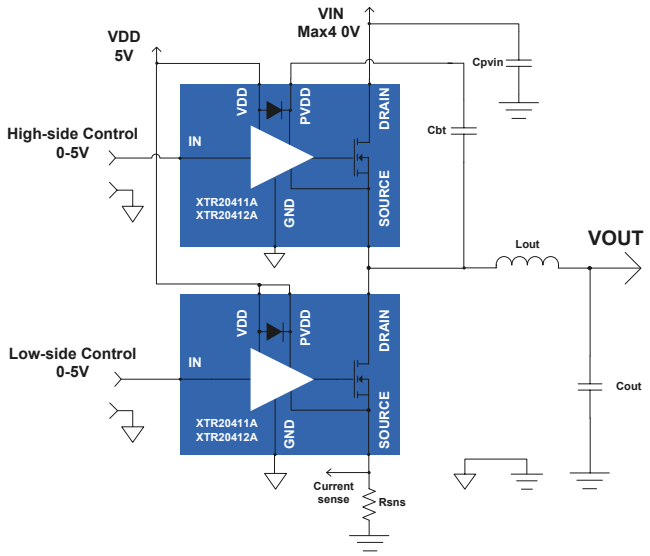

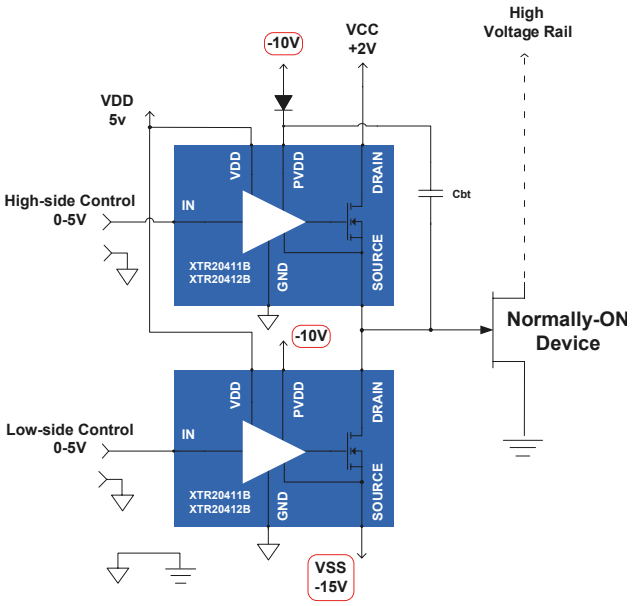

XTR2041X

35V N-CHANNEL POWER MOSFET WITH FLOATING DRIVER

ORDERING INFORMATION:

Product		Package Material	Pin Count	Package	Operating Temperature	R_{ON}	Peak Current Capability
Reference	Extension						
XTR20411A-	D	Ceramic	8	Side-brazed DIP	-60°C to +230°C	1.13 Ω	3.9 A
XTR20411A-	FE	Ceramic	8	Gull-wing flatpack with ePad	-60°C to +230°C	1.13 Ω	3.9 A
XTR20412A-	T	Metal	6	TO-257	-60°C to +230°C	0.33 Ω	8.3 A
XTR20412B-	T	Metal	6	TO-257	-60°C to +230°C	0.33 Ω	8.3 A

XTR2081X

HIGH-TEMPERATURE 80V LOW-SIDE N-CHANNEL POWER MOSFET WITH DRIVER

DESCRIPTION

XTR2081x is a family of extremely flexible power N-channel MOSFETs with integrated driver designed for extreme reliability and high temperature applications such as DC/DC converters, motor control and power switching. XTR2081x parts are intended to be used as low side switches. They can sustain drain spikes up to 100V. XTR2081x parts can be directly driven by any 5V digital output, making them fully plug-and-play devices, avoiding any time consuming optimization of the matching network between driver and power transistor.
The XTR2081x family is composed of two different dies each with different output maximum current.
XTR2081x parts are robust to usual spikes associated with parasitic inductors and fast transients in switching applications.
Features of XTR2081x family parts include UVLO (driver state is OFF whenever the supply is too low), desaturation protection of the output transistor with soft shut-down functionality and possibility to select inversion of control signal.
Full functionality is guaranteed from -60°C to +230°C, though operation well beyond this temperature range is achieved. XTR2081x family parts have been designed to reduce system cost and ease adoption by reducing the learning curve and providing smart and easy to use features.
The Parts from the XTR2081x family are available in ruggedized through hole hermetic package.

FEATURES

- Operational beyond the -60°C to +230°C temperature range
- Robust operation as low-side switch with drain spikes up to 90V.
- Standard Schmitt-trigger CMOS input
- Exists in inverting and non-inverting versions.
- Plug-and-play with any digital 5V output.
- Over current (desaturation) protection with soft turn-off.
- Under Voltage LOckout UVLO protection (MOSFET OFF).
- Low on-resistance :
  XTR20811 : 1,7Ω @ 230°C
  XTR20812 : 0,780Ω @ 230°C
- Large peak current capabilities:
  XTR20811 : 1.6A @ 230°C
  XTR20812 : 3.8A @ 230°C
- Low On- and Off-time (<100 nsec @ 230°C).
- Monolithic design.
- Latch-up free.

APPLICATIONS

- Reliability-critical, Automotive, Aeronautics & Aerospace, Down-hole.
- DC/DC converters, motor drive, switching power supplies, switching control.

TYPICAL APPLICATION DIAGRAM

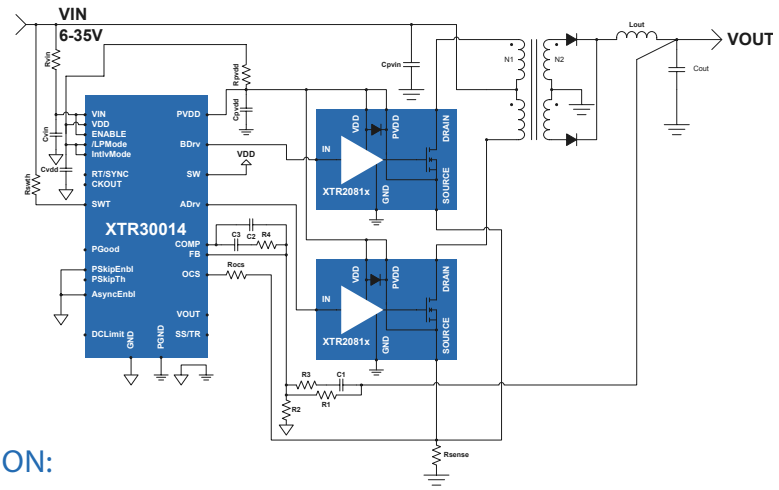

ORDERING INFORMATION:

Product		Package Material	Pin Count	Package	Operating Temperature	R_{ON}	Peak Current Capability
Reference	Extension						
XTR20811-	D	Ceramic	8	Side-brazed DIP	-60°C to +230°C	1.70 Ω	1.6 A

XTR7001X

1.5A LOW-DROPOUT VOLTAGE REGULATOR

DESCRIPTION

XTR7001x is a family of low-power voltage regulators/references designed for extreme reliability and high temperature applications. Being able to operate with input voltages from 2.8V to 5.5V, XTR7001x parts can source a current of 1.5A at +230°C while providing excellent regulation characteristics with a dropout as low as 1.9V. Moreover, it can supply a large range of output voltages from 0.5V to 3.6V thanks to an accurate current mode bandgap reference.
Six protection systems are implemented to ensure a good operation and reliability of the circuit: UVLO, Short-circuit hiccup mode, thermal shutdown, fast output overshoot killer, soft turn-off and power supply supervision in case of bad input decoupling.
XTR7001x parts can be used on a wide range of applications such as high fan-out and low dropout regulators/references, adjustable power supply, current sources, as well as precision bridge excitation.
Special design techniques were used allowing XTR7001x parts to offer a precise, robust and reliable operation in critical applications. Full functionality is guaranteed from -60°C to +230°C, though operation well below and above this temperature range is achieved.
XTR7001x parts have been designed to reduce system cost and ease adoption by reducing the learning curve and providing smart and easy to use features.
Parts from the XTR7001x family are available in ruggedized SMT and thru-hole packages. Parts are also available as tested dies.

APPLICATIONS

- Reliability-critical, Automotive, Aeronautics & Aerospace, Down-hole.
- High-efficiency regulated power supplies, bridge excitation, cable- or battery-powered applications.

FEATURES

- Operational beyond the -60°C to +230°C temperature range.
- Input voltages from 2.8V to 5.5V.
- High output current with low dropout:1.5A @ 230°C with 1.9V dropout (1A with 1.2V dropout)
- Up to 32 possible discrete output voltages from same part:
  From 0.5V to 3.6V by step of 100mV.
- Possible Vout selection based on an external resistive divider.
- No minimum dropout imposed (current limited).
- Low current consumption in full-power (1.3mA), low-power modes (550µA) and stand-by (<20µA) modes.
- Output Overshoot Remover system.
- Over current protection (hiccup mode).
- Customer selectable Thermal Shutdown protection.
- Customer selectable Thermal Shutdown threshold.
- UVLO protection.
- Power supply protection for insufficiently decoupled networks.
- Accurate bandgap reference (+/-4%).
- Low noise under 45µVrms typ.
- Soft startup and soft shutdown.
- Stable over a wide range of load capacitance (10nF to 33µF).
- Low temperature dependence (20 ppm/°C).
- Excellent line regulation (<0.25%/V @ 230°C).
- Excellent load regulation (<2.6%/A @ 230°C).
- Monolithic design for high-reliability.
- Latch-up free.
- Ruggedized SMT and thru-hole packages.
- Also available as tested die.

VOUT selected using internal reference and resistor divider

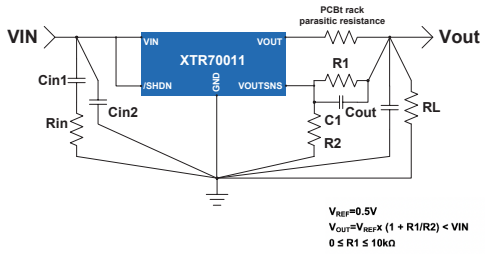

VOUT selected using internal reference only

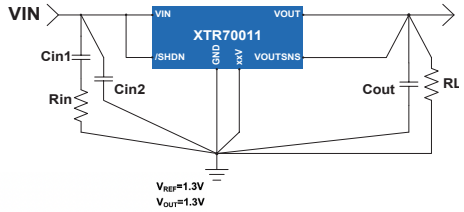

Typical applications with Kelvin connections on load and GND.

ORDERING INFORMATION:

Product		Package Material	Pin Count	Package	Operating Temperature
Reference	Extension				
XTR70010-	TD	-	-	Tested Die	-60°C to +230°C
XTR70011-	FE	Ceramic	10	Gull-wing flat pack with ePad	-60°C to +230°C
XTR70015-	D	Ceramic	8	Side-brazed DIP	-60°C to +230°C

XTR7002X

HIGH INPUT VOLTAGE, 2A POSITIVE LDO REGULATOR

DESCRIPTION

XTR7002x is a family of high-temperature, high-input voltage, 2Amp ultra low dropout voltage regulators designed for extreme reliability high voltage and high temperature applications. Being able to operate with input voltages from 3.0V to 30V, XTR7002x parts can source a current of 2A at +230°C while providing excellent regulation characteristics with a dropout as low as 1.2V. Several preset reference voltages are available from 0.6V to 15V allowing output voltages from 0.6V to virtually 30V. Four protection features are implemented to ensure a good operation and reliability of the circuit: UVLO, hiccup modes shortcircuit protection, customer selectable thermal shutdown, soft turn-on/off.

XTR7002x parts can be used in a wide range of applications such as high fan-out and low-dropout regulators, adjustable power supply, current sources, as well as precision bridge excitation. Special design techniques were used allowing XTR7002x parts to offer a precise, robust and reliable operation in critical applications. Full functionality is guaranteed from -60°C to +230°C, though operation well below and above this temperature range is achieved.

XTR7002x parts have been designed to reduce system cost and ease adoption by reducing the learning curve and providing smart and easy to use features.

Parts from the XTR7002x family are available in ruggedized SMT and thru-hole packages, as well as tested dies.

FEATURES

- Operational beyond the -60°C to +230°C temperature range.
- Input voltages from 3.0V to 30V.
- Possible output voltages from 0.6V to 30V.
- Accurate bandgap reference (+/-3%).
- No minimum dropout imposed (current limited).
- High output current with low dropout: 1A @ 230°C with 0.63V, 2A @ 230°C with 1.4V
- Low current consumption in full-power (2.3mA) and low-power modes (950µA).
- Over current protection (hiccup mode).
- Customer selectable Thermal Shutdown protection.
- Customer selectable UVLO protection.
- Low noise : 550uV for Vout=15V / 75uV for Vout=0.9V
- Soft startup and soft shutdown.
- Stable over a wide range of load capacitance (0.5uF to 50µF)
- Low temperature dependence (40 ppm/°C).
- Excellent line (0.015%/V) and load (0.15%/A) regulations.
- Monolithic design for high-reliability.
- Latch-up free.

APPLICATIONS

- Reliability-critical, Automotive, Aeronautics & Aerospace, Down-hole.
- High-efficiency regulated power supplies, bridge excitation, cable- or battery-powered applications.

TYPICAL APPLICATION DIAGRAM

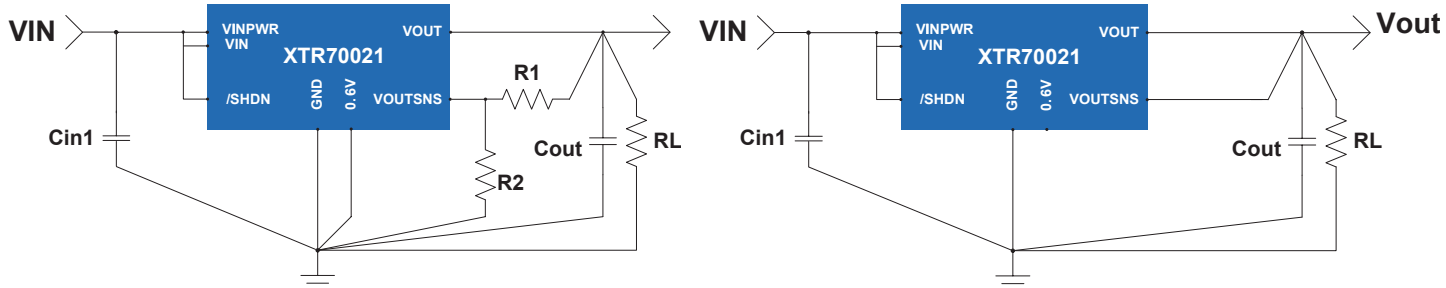

V_{REF}=0.6V
$V_{OUT}=(1+R_1/R_2) \times V_{REF} < V_{IN}$
$0 \le R_1 \le 10k\Omega$

V_{REF}=3.33V
V_{OUT}=3.33V

Typical applications with Kelvin connections on load and GND.

XTR7002X

HIGH INPUT VOLTAGE, 2A POSITIVE LDO REGULATOR

ORDERING INFORMATION:

Product		Package Material	Pin Count	Package	Operating Temperature	Output Voltage
Reference	Extension					
XTR70020-	TD	-	-	Tested Die	-60°C to +230°C	-
XTR70021-	FE	Ceramic	10	Gull-wing flat pack with ePad	-60°C to +230°C	-
XTR70022A-	T	Metal	3	TO-254	-60°C to +230°C	0.6V
XTR70022B-	T	Metal	3	TO-254	-60°C to +230°C	0.8V
XTR70022C-	T	Metal	3	TO-254	-60°C to +230°C	0.9V
XTR70022D-	T	Metal	3	TO-254	-60°C to +230°C	1.2V
XTR70022E-	T	Metal	3	TO-254	-60°C to +230°C	1.8V
XTR70022F-	T	Metal	3	TO-254	-60°C to +230°C	2.2V
XTR70022G-	T	Metal	3	TO-254	-60°C to +230°C	2.5V
XTR70022H-	T	Metal	3	TO-254	-60°C to +230°C	2.8V
XTR70022I-	T	Metal	3	TO-254	-60°C to +230°C	3.3V
XTR70022J-	T	Metal	3	TO-254	-60°C to +230°C	5.0V
XTR70022K-	T	Metal	3	TO-254	-60°C to +230°C	5.5V
XTR70022L-	T	Metal	3	TO-254	-60°C to +230°C	7.5V
XTR70022M-	T	Metal	3	TO-254	-60°C to +230°C	8.0V
XTR70022N-	T	Metal	3	TO-254	-60°C to +230°C	9.0V
XTR70022O-	T	Metal	3	TO-254	-60°C to +230°C	10V
XTR70022P-	T	Metal	3	TO-254	-60°C to +230°C	12V
XTR70022Q-	T	Metal	3	TO-254	-60°C to +230°C	13V
XTR70022R-	T	Metal	3	TO-254	-60°C to +230°C	15V
XTR70025-	D	Ceramic	8	Side-brazed DIP	-60°C to +230°C	-

XTR2602X

ISOLATED INTELLIGENT GATE DRIVER

DESCRIPTION

XTR2602x is a high-temperature, high reliability isolated power transistor driver designed to provide a robust, reliable, compact and efficient solution for driving a large variety of high-temperature, high-voltage, and high-efficiency power transistors. XTR2602x is able to drive normally-On and normally-Off power transistors in Silicon Carbide (SiC), Gallium Nitride (GaN) and standard silicon, including JFETs, MOSFETs, BJTs, SJTs and MESFETs.

The XTR2602x driver implements unprecedented functionality for high-temperature drivers allowing safe operation at system level by preventing any cross-conduction between high-side and low-side switches, through isolated communication between high-side and low-side drivers. Other features include internal voltage regulator, 4-channel transceivers (2 TX and 2 RX) for isolated data transmission with the microcontroller and between high side and low side drivers. The XTR2602x includes one pull-up gate-drive-channel (PU_DR) capable of sourcing a typical 4A peak current and two pull-down gate-drive-channels capable of sinking a typical 2.4A peak current (PD_DR and PD_MC). The PD_DR channel is used for the effective turn-off of the power transistor, while PD_MC channel is used for Active Miller Clamping (AMC) function thanks to its internal gate level detection.

The circuit includes soft shut-down capability that slowly shuts down the power transistor in case of fault. The XTR2602x is able to detect failures due to over-current in the power switch (rail-to-rail, positive and negative current sense) or to UVLO detected on the power supply. In addition, safe start-up and cross-conduction protections are implemented to guarantee safe operation at system level.

The XTR2602x can be used standalone but also as a controller with multiplied drive capabilities using the XTR25020, which is the driver part of the XTR2602x without the isolation transceiver.

APPLICATIONS

- Reliability-critical, Automotive, Aeronautics & Aerospace, Down-hole, Energy Conversion, Solar.
- Intelligent Power Modules (IPM).
- Motor drives.
- Uninterruptible power supplies (UPS).
- Power inverters.
- Power conversion and power factor correction (PFC).
- DC/DC converters and switched mode power supplies (SMPS).

FEATURES

- Operational beyond the -60°C to +230°C temperature range.
- Supply voltage from 4.5V to 35V.
- Integrated charge-pump inside pull-up driver allowing 100% duty-cycle PWM control signal.
- Internal 5V LDO regulator.
- Safe start-up of normally-on devices.
- Isolated data transmission through multi-channel transceiver.
- Half bridge cross-conduction protection.
- Pull-up driver with 4A peak current and 1A continuous current capability at T_C = 230°C.
- Pull-down driver with 2.4A peak current capability at T_C = 230°C.
- On-chip active Miller clamp switch.
- Resistor-programmable Under Voltage LOckout (ULVO).
- Resistor-programmable over-current protection level (rail-to-rail, positive and negative current sense).
- Latch-up free.
- Ruggedized SMT packages.
- Also available as tested dies.

XTR2602X

ISOLATED INTELLIGENT GATE DRIVER

TYPICAL APPLICATION DIAGRAM

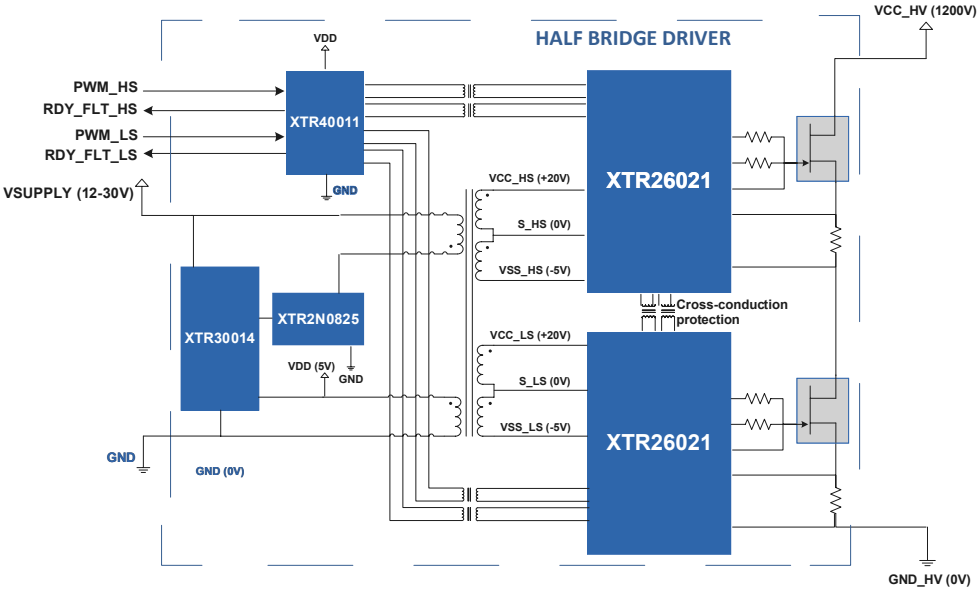

ORDERING INFORMATION:

Product		Package Material	Pin Count	Package	Operating Temperature
Reference	Extension				
XTR26020-	TD	-	-	Tested Die	-60°C to +230°C
XTR26021-	LJ	Ceramic	28	Leaded J Chip Carrier	-60°C to +230°C

XTR2501X

POWER GATE DRIVER

DESCRIPTION

XTR2501x is a high-temperature, high reliability power transistor driver integrated circuit designed to drive normally ON and nor-mally-OFF power transistors in Silicon Carbide (SiC), Gallium Nitride (GaN) and standard silicon, including JFETs,MOSFETs, BJTs, SJTs and MESFETs. For turning on the power transistors, the XTR2501x includes two independent pull-up gate-drive-channels (PU_DR1 and PU_DR2) capable of sourcing 4A at 230°C peak current each. For turning off the power transistors, the XTR2501x includes two pull-down gate-drive-channels capable of sinking 3A at 230°C peak current each (PD_DR and PD_MC). For driving wide bandgap transistors, it is recommended to use XTR2501x as a power stage extension for the XTR2601x, which generates the needed control signals and additional protection functions (see XTR2601x datasheet and application note for more details). XTR2501x can also be used standalone as a half-bridge driver for DC-DC converters and motor drive.

FEATURES

- Operational beyond the -60°C to +230°C temperature range.
- High voltage supply from 7V to 35V.
- Low voltage supply from 4.5V to 5.5V
- Integrated charge-pump inside pull-up drivers allowing 100% duty-cycle PWM control signal.
- Double pull-up drivers with combined 8A peak and 2A continuous current capability at T_C=230°C.
- Two pull-down drivers with 3A peak current capability at T_C=230°C for each driver.
- Nonoverlapped pull-up and pull-down outputs.
- Enable input signal for driver outputs reset.
- Latch-up free.
- Ruggedized SMT packages.
- Also available as tested dies.

APPLICATIONS

- Reliability-critical, Automotive, Aeronautics & Aerospace, Down-hole.
- Intelligent Power Modules (IPM).
- Power inverters.
- Power conversion and motor drive.
- DC-DC converters and switched mode power supplies.

TYPICAL APPLICATION DIAGRAM

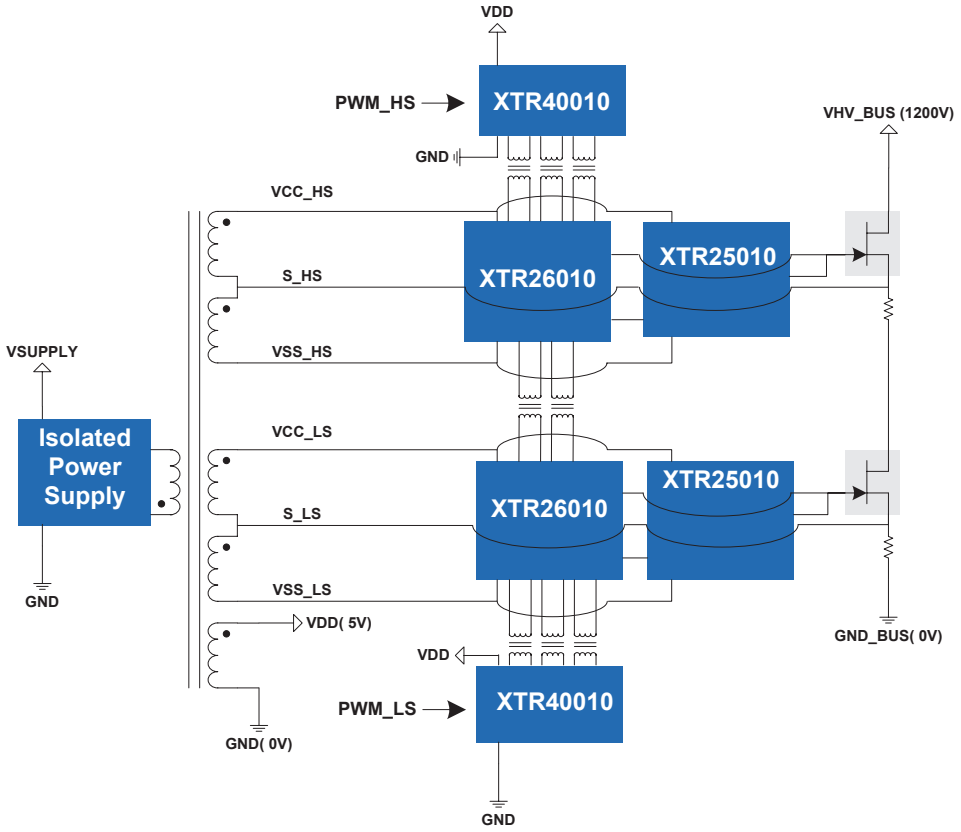

XTR2501X

POWER GATE DRIVER

ORDERING INFORMATION:

Product		Package Material	Pin Count	Package	Operating Temperature
Reference	Extension				
XTR25010-	TD	-	-	Tested Die	-60°C to +230°C
XTR25011-	LJ	Ceramic	52	Leaded J Chip Carrier	-60°C to +230°C

XTR2502X

INTELLIGENT GATE DRIVER

DESCRIPTION

XTR2502x is a high-temperature, high reliability intelligent power transistor driver designed to provide a robust, reliable, compact and efficient solution for driving a large variety of high-temperature, high-voltage, and high-efficiency power transistors. XTR2502x is able to drive normally-On and normally-Off power transistors in Silicon Carbide (SiC), Gallium Nitride (GaN) and standard silicon, including JFETs, MOSFETs, BJTs, SJTs and MESFETs.
The XTR2502x includes one pull-up gate-drive-channel (PU_DR) capable of sourcing a typical 3A peak current and two pull-down gate-drive-channels capable of sinking a typical 3A peak current (PD_DR and PD_MC). The PD_DR channel is used for the effective turn-off of the power transistor, while PD_MC channel is used for Active Miller Clamping (AMC) function thanks to its internal gate level detection.
The circuit includes soft shut-down capability that slowly shuts down the power transistor in case of fault. The XTR2502x is able to detect failures due to over-current in the power switch or to UVLO detected on the power supply. In addition, safe start-up and cross-conduction protection are implemented to guarantee safe operation at system level.
The XTR2502x can be used to extend the drive capability of the XTR2602x. It can also be used with the XTR4001x to drive multiple power transistors connected in parallel for very high power applications.

FEATURES

- Operational beyond the -60°C to +230°C temperature range.
- Supply voltage from 4.5V to 35V.
- Integrated charge-pump inside pull-up driver allowing 100% duty-cycle PWM control signal.
- Internal 5V LDO regulator.
- Safe start-up of normally-on devices.
- Half bridge cross-conduction protection.
- Pull-up driver with 3A peak current and 1A continuous current capability.
- Pull-down driver with 3A peak current capability.
- On-chip active Miller clamp switch with 3A capability.
- Resistor-programmable Under Voltage LOckout (ULVO).
- Resistor-programmable over-current protection level (rail-to-rail, positive and negative current sense).
- Independent control of output drivers functionality (without internal cross-conduction prevention between pull-up and pull-down drivers).
- Latch-up free.
- Ruggedized SMT packages.

APPLICATIONS

- Reliability-critical, Automotive, Aeronautics & Aerospace, Down-hole.
- Intelligent Power Modules (IPM).
- Power inverters.
- Power conversion and motor drive.
- DC/DC conversion and switched mode power supplies.

TYPICAL APPLICATION DIAGRAM

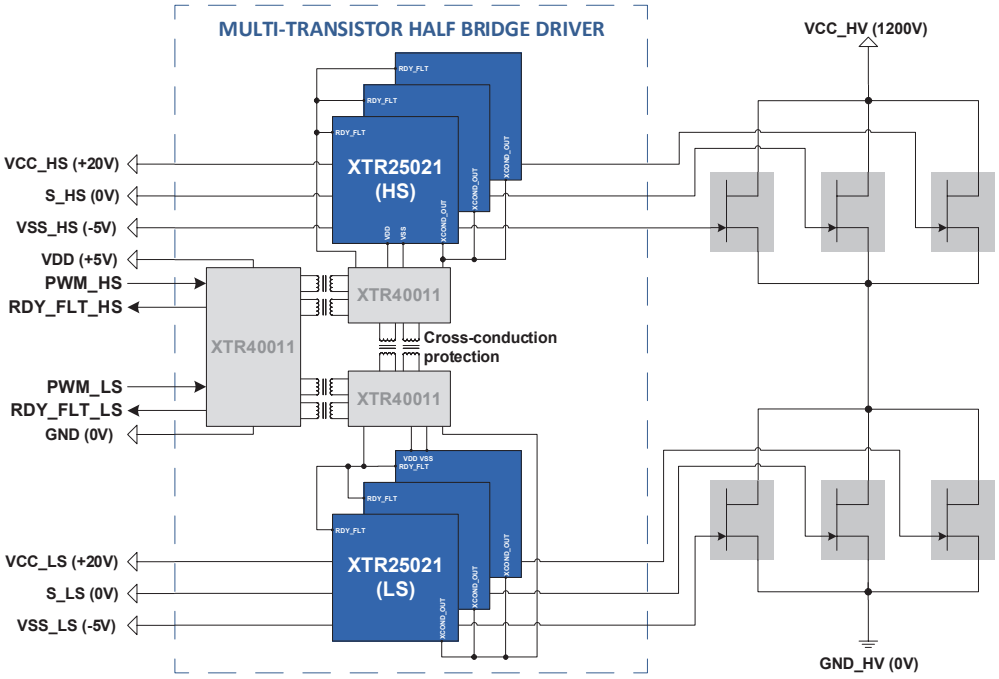

XTR2502X

INTELLIGENT GATE DRIVER

ORDERING INFORMATION:

Product		Package Material	Pin Count	Package	Operating Temperature
Reference	Extension				
XTR25021-	LJ	Ceramic	28	Leaded J Chip Carrier	-60°C to +230°C

XTR2541X

35V FLOATING DRIVER

DESCRIPTION

The XTR2541x gate driver family is an extremely flexible floating driver allowing the control of either PMOS or NMOS transistors (VGS=5V) and designed for extreme reliability and high temperature applications. XTR2541x is intended to drive both high-side and low-side switches by converting the digital input signal into a floating control signal referenced to PVDD-PGND. The driver operates in both negative and positive configurations with possible offsets between input and output of -30V to +35V. XTR2541x parts can be directly driven by any digital output, making them fully plug-and-play devices. This driver features full short circuit protection by means of desaturation detection of the external transistor after a blanking time, with soft turn-off feature and reporting the fault through the ERR pin. Undervoltage protections are provided for floating voltage power supplies. The device also includes an Error status output that can be used as an Enable. Full functionality is guaranteed from -60°C to +230°C, though operation well below and above this temperature range is achieved. XTR2541x family parts have been designed to reduce system cost and ease adoption by reducing the learning curve and providing smart and easy to use features. Parts from the XTR2541x family are available in ruggedized through hole hermetic package.

FEATURES

- Operational beyond the -60°C to +230°C temperature range.
- Drives P- as well as N-channel MOSFETs (VGS=5V).
- Input-to-output stages offset voltage from -30V to +35V.
- Operation as low-side or high-side driver.
- Under Voltage Lockout (UVLO) on PVDD domain.
- Standard Schmitt-trigger CMOS input.
- Plug-and-play with any digital 3.5V to 5V output.
- Up to 1A sink/source current (@ Tj=+230°C).
- Desaturation protection for both P- and N-channel MOSFETs.
- Soft-shutdown function in case of desaturation detected.
- Error reporting to digital controller.
- Monolithic design.
- Latch-up free

APPLICATIONS

- Reliability-critical, Automotive, Aeronautics & Aerospace, Down-hole.
- MOSFET or GaN driving, power converters, switching power supplies, motor drive, floating or ground-connected switches, intelligent power switches (IPS).

TYPICAL APPLICATION DIAGRAM

Totem pole configuration
(NMOS/NMOS)

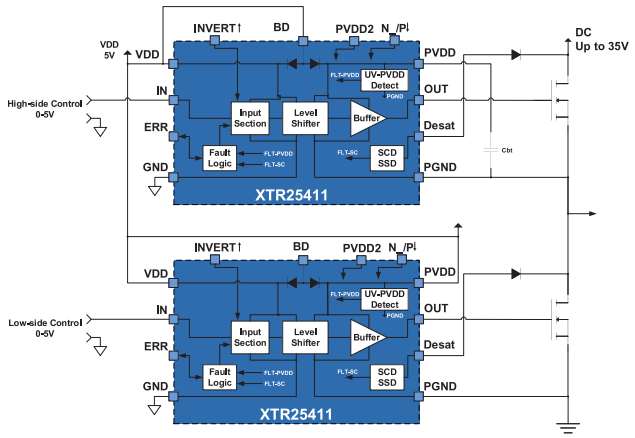

Push-pull configuration
(PMOS/NMOS)

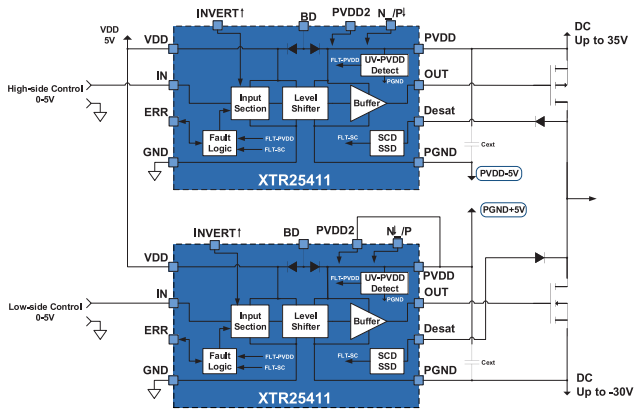

XTR2541X

35V FLOATING DRIVER

BLOCK DIAGRAM

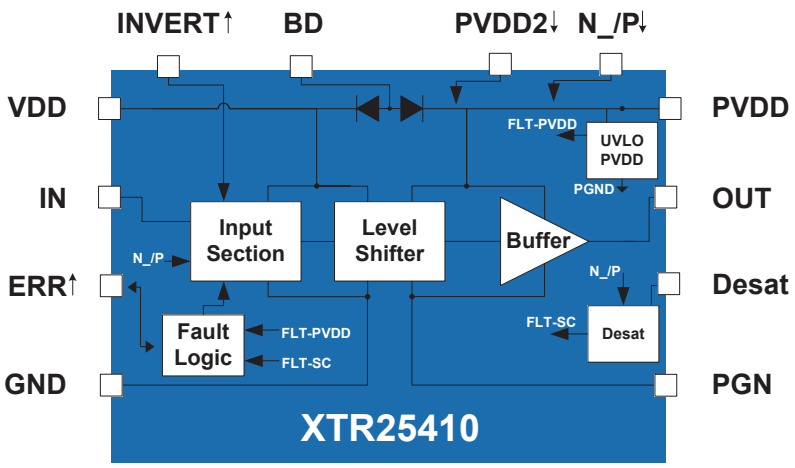

ORDERING INFORMATION:

Product		Package Material	Pin Count	Package	Operating Temperature
Reference	Extension				
XTR25411-	D	Ceramic	16	Side-brazed DIP	-60°C to +230°C

XTR7501X

POSITIVE SERIES VOLTAGE REGULATOR

DESCRIPTION

XTR7501x is a family of low-power voltage regulators/references designed for extreme reliability and high temperature applications. Being able to operate with input voltages from 2.8V to 35V, XTR7501x parts can supply up to 50mA at +230°C while providing excellent regulation characteristics. Parts from this product family operate as a 3-terminal series regulator/reference with a temperature coefficient (TC) as low as 40ppm/°C. Up to ten possible output voltages (1.2V to 15V) can be obtained from the same part.
Functionality features include shut-down mode and soft-start.
XTR7501x parts can be used in a wide range of applications such as positive and negative regulators/references, adjustable power supply, current sources, as well as precision bridge excitation.
Special design techniques were used allowing XTR7501x parts to offer a precise, robust and reliable operation in critical applications. Full functionality is guaranteed from -60°C to +230°C, though operation well below and above this temperature range is achieved.
XTR7501x parts have been designed to reduce system cost and ease adoption by reducing the learning curve and providing smart and easy to use features.
Parts from the XTR7501x family are available in ruggedized SMT and thru-hole packages. Parts are also available as tested dies. See also the Application Notes in the XTR7501x webpage.

FEATURES

- Operational beyond the -60°C to +230°C temperature range.
- Up to 10 possible output voltages with the same part: 1.2V / 1.8V / 2.5V / 3.3V / 5V / 5.5V / 9V / 10V / 12V / 15V.
- Input voltage from 2.8V to 35V.
- Drop-in replacement of commercial voltage references.
- Trimming capabilities.
- Output current up to 50mA @ 230°C.
- Soft-start.
- Compatible with low and high dropout voltages.
- Stable over a wide range of load capacitance (0.1µF to 10µF).
- Low intrinsic current consumption (380µA @ 230°C).
- Low temperature dependence (40ppm/°C).
- Excellent line regulation (0.75% @ 230°C).
- Active-low shutdown control.
- Monolithic design for high-reliability.
- Latch-up free SOI process.

APPLICATIONS

- Reliability-critical, Automotive, Aeronautics & Aerospace, Down-hole.
- Positive and negative precision regulators/references, A/D and D/A converters, current sources, bridge excitation.

TYPICAL APPLICATION DIAGRAM

1.8 Voltage Regulator/ Reference

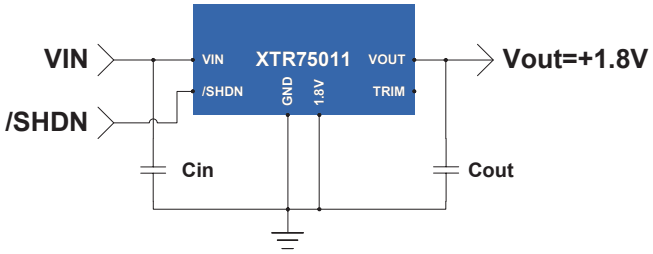

XTR7501X

POSITIVE SERIES VOLTAGE REGULATOR

ORDERING INFORMATION:

Product		Package Material	Pin Count	Package	Operating Temperature	Output Voltage versus Package									
Reference	Ext.					1.2V	1.8V	2.5V	3.3V	5V	5.5V	9V	10V	12V	15V
XTR75010-	TD	-	-	Tested Die	-60°C to +230°C	✓	✓	✓	✓	✓	✓	✓	✓	✓	✓
XTR75011-	D	Ceramic	16	Side-brazed DIP	-60°C to +230°C	✓	✓	✓	✓	✓	✓	✓	✓	✓	✓
XTR75011-	S	Ceramic	16	SOIC	-60°C to +230°C	✓	✓	✓	✓	✓	✓	✓	✓	✓	✓
XTR75014-	D	Ceramic	8	Side-brazed DIP	-60°C to +230°C	✓	✓	✓	✓						
XTR75014-	FE	Ceramic	8	Gull-wing flat pack with ePad	-60°C to +230°C	✓	✓	✓	✓						
XTR75015-	D	Ceramic	8	Side-brazed DIP	-60°C to +230°C	✓		✓		✓				✓	
XTR75015-	FE	Ceramic	8	Gull-wing flat pack with ePad	-60°C to +230°C	✓		✓		✓				✓	

XTR7503X NEW

NEGATIVE SERIES VOLTAGE REGULATOR

DESCRIPTION

XTR7503x is a family of low-power voltage regulators/references designed for extreme reliability and high temperature applications. Being able to operate with input voltages from -35V to -2.8V, XTR7503x parts can supply up to 50mA at +230°C while providing excellent regulation characteristics. Parts from this product family operate as a 3-terminal series regulator/reference with a temperature coefficient (TC) as low as 40ppm/°C. Up to ten possible output voltages (-15V to -1.2V) can be obtained from the same part.
Functionality features include shut-down mode and soft-start.
XTR7503x parts can be used in a wide range of applications such as positive and negative regulators/references, adjustable power supply, current sources, as well as precision bridge excitation.
Special design techniques were used allowing XTR7503x parts to offer a precise, robust and reliable operation in critical applications. Full functionality is guaranteed from -60°C to +230°C, though operation well below and above this temperature range is achieved.
XTR7503x parts have been designed to reduce system cost and ease adoption by reducing the learning curve and providing smart and easy to use features.
Parts from the XTR7503x family are available in ruggedized SMT and thru-hole packages. See also the Application Notes in the XTR7503x webpage.

FEATURES

- Up to 10 possible output voltages from same part: -1.2V / -1.8V / -2.5V / -3.3V / -5V / -5.5V / -9V / -10V -12V / -15V.
- Input voltage from -35V to -2.8V.
- Drop-in replacement of commercial voltage references.
- Trimming capabilities.
- Operational beyond the -60°C to +230°C temperature range.
- Output current up to 50mA @ 230°C.
- Soft-start.
- Compatible with low and high dropout voltages.
- Stable over a wide range of load capacitance (0.1µF to 10µF).
- Low intrinsic current consumption (380µA @ 230°C).
- Low temperature dependence (40ppm/°C).
- Excellent line regulation (0.75% @ 230°C).
- Active-low shutdown control.
- Monolithic design for high-reliability.
- Latch-up free SOI process.
- Ruggedized SMT and thru-hole packages.

APPLICATIONS

- Reliability-critical, Automotive, Aeronautics & Aerospace, Down-hole.
- Positive and negative precision regulators/references, A/D and D/A converters, current sources, bridge excitation.

TYPICAL APPLICATION DIAGRAM

- 1.8V Voltage Regulator/Reference

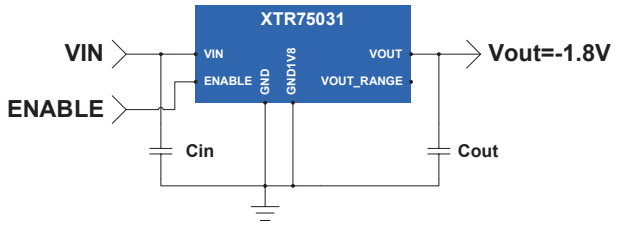

-12V Voltage Regulator with External Gain/or TRIM

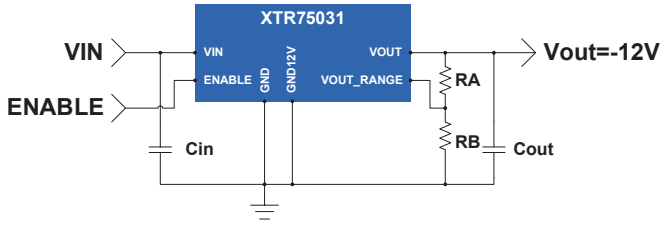

$$V_{OUT} = \frac{(R_{A//B} + 10k\Omega) \cdot V_{OUT_NOM} + 100k\Omega \cdot V_{REF_ACTUAL}}{(R_{A//B} + 10k\Omega) \cdot \left(1 + \frac{100k\Omega}{R_A}\right)}$$

XTR7503X

NEGATIVE SERIES VOLTAGE REGULATOR

ORDERING INFORMATION:

Product		Package Material	Pin Count	Package	Operating Temperature	Output Voltage versus Package									
Reference	Ext.					- 1.2V	- 1.8V	- 2.5V	- 3.3V	- 5V	- 5.5V	- 9V	- 10V	- 12V	- 15V
XTR75030-	TD	-	-	Tested Die	-60°C to +230°C	✓	✓	✓	✓	✓	✓	✓	✓	✓	✓
XTR75031-	D	Ceramic	16	Side-brazed DIP	-60°C to +230°C	✓	✓	✓	✓	✓	✓	✓	✓	✓	✓
XTR75031-	S	Ceramic	16	SOIC	-60°C to +230°C	✓	✓	✓	✓	✓	✓	✓	✓	✓	✓
XTR75034-	D	Ceramic	8	Side-brazed DIP	-60°C to +230°C	✓	✓	✓	✓						
XTR75034-	FE	Ceramic	8	Gull-wing flat pack with ePad	-60°C to +230°C	✓	✓	✓	✓						
XTR75035-	D	Ceramic	8	Side-brazed DIP	-60°C to +230°C	✓		✓		✓				✓	
XTR75035-	FE	Ceramic	8	Gull-wing flat pack with ePad	-60°C to +230°C	✓		✓		✓				✓	

XTR431

PROGRAMMABLE SHUNT REGULATOR

DESCRIPTION

XTR431 is a high-reliability, high-temperature version of the well known "431" shunt voltage regulator. It operates as a 3-terminal shunt regulator with an total drift of the reference voltage as low as 35mV (typical). The output voltage may be set from 2.55V to 35V by selecting the value of two external resistors implementing a divider network.
The XTR431 is able to reliably operate over a wide range of currents from 500µA to 50mA and load capacitors from 27nF and up. Functionality features include shut-down mode and low dy-namic output impedance.
This part can be used as a high-reliability, high-temperature re-placement of zener diodes in many applications such as on-board regulation, adjustable power supply and switching power supplies. The fact of operating as a zener diode makes the XTR431 convenient to be used as a positive or negative regulator.
Special design techniques were used allowing the XTR431 parts to offer a precise, robust and reliable operation in critical applications. Full functionality is guaranteed from -60°C to +230°C, though operation well below and above this temperature range is achieved.
The XTR431 has been designed to reduce system cost and ease adoption by reducing the learning curve and providing smart and easy to use features.
XTR431 is available in ruggedized SMT and thru-hole packages. Parts are also available as tested dies.

FEATURES

- Operational beyond the -60°C to +230°C temperature range.
- Adjustable output voltage from 2.5V to 35V.
- Low dynamic output impedance.
- Sink current capability 500µA to 50mA
- Low temperature coefficient (ΔVREF=35mV typ).
- 2.55V reference with 6% accuracy.
- Fast turn-on response.
- Shut-down mode.
- Stable over a continuous range of load capacitors (27nF min).
- Monolithic design.

APPLICATIONS

- Reliability-critical, Automotive, Aeronautics & Aerospace, Down-hole.
- Shunt regulators, voltage clamping, voltage references, voltage regulators, switching regulators, feedback networks, volt-age monitors, current sources.

TYPICAL APPLICATIONS DIAGRAM

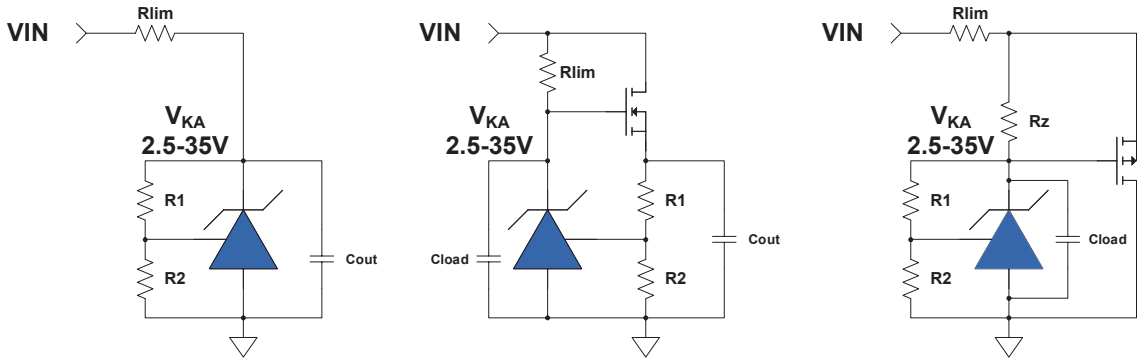

XTR431

PROGRAMMABLE SHUNT REGULATOR

ORDERING INFORMATION:

Product		Package Material	Pin Count	Package	Operating Temperature
Reference	Extension				
XTR431-	TD	-	-	Tested Die	-60°C to +230°C
XTR431-	FE	Ceramic	8	Gull-wing flat pack with ePad	-60°C to +230°C
XTR431-	D	Ceramic	8	Side-brazed DIP	-60°C to +230°C

XTR65X

VERSATILE TIMER

DESCRIPTION

XTR65x is a family of highly stable, small footprint and versatile timers designed for extreme reliability and temperature applications such as accurate time delays or frequency generators. Being able to operate from supply voltages from 2.8V to 5.5V, the XTR65x timers can generate timing periods from some hundreds of nanoseconds and oscillations with duty-cycles from virtually zero to 100%, overcoming the limitations of existing 555.

Other features include the availability of high current complementary and non-overlapping outputs, complementary high-voltage open-drain outputs, integrated timing capacitor of 200pF for reduced bill-of-material (BoM), and integrated coarse temperature sensor.

Especial design techniques were used allowing the XTR65x parts to offer a precise, robust and reliable operation in critical applications. Full functionality is guaranteed from -60°C to +230°C, though operation well below and above this temperature range is achieved.

XTR65x has been designed to reduce system cost and ease adoption by reducing the learning curve and providing smart and easy to use features.

Parts from the XTR65x family are available in ruggedized thru-hole package, as well as tested dies.

FEATURES

- Operational beyond the -60°C to +230°C temperature range.
- Supply voltage from 2.8V to 5.5V.
- Monostable, Astable, PWM and PPM modes of operation.
- Complementary, non-overlapping outputs.
- Outputs can source or sink 50mA @ 230°C.
- Complementary high-voltage open-drain outputs.
- XTR655: drop-in replacement of 555.
- DISABLE mode.
- Integrated timing capacitor of 200pF for reduced BoM.
- Integrated coarse temperature sensor.
- Several packaging options including drop-in replacement of 555.
- Monolithic design for high-reliability.
- Latch-up free SOI process.

APPLICATIONS

- Reliability-critical, Automotive, Aeronautics & Aerospace, Down-hole.
- Timing and pulse generation, frequency generation, pulse width modulation (PWM), pulse position modulation (PPM), linear ramp generator.

TYPICAL APPLICATION DIAGRAM

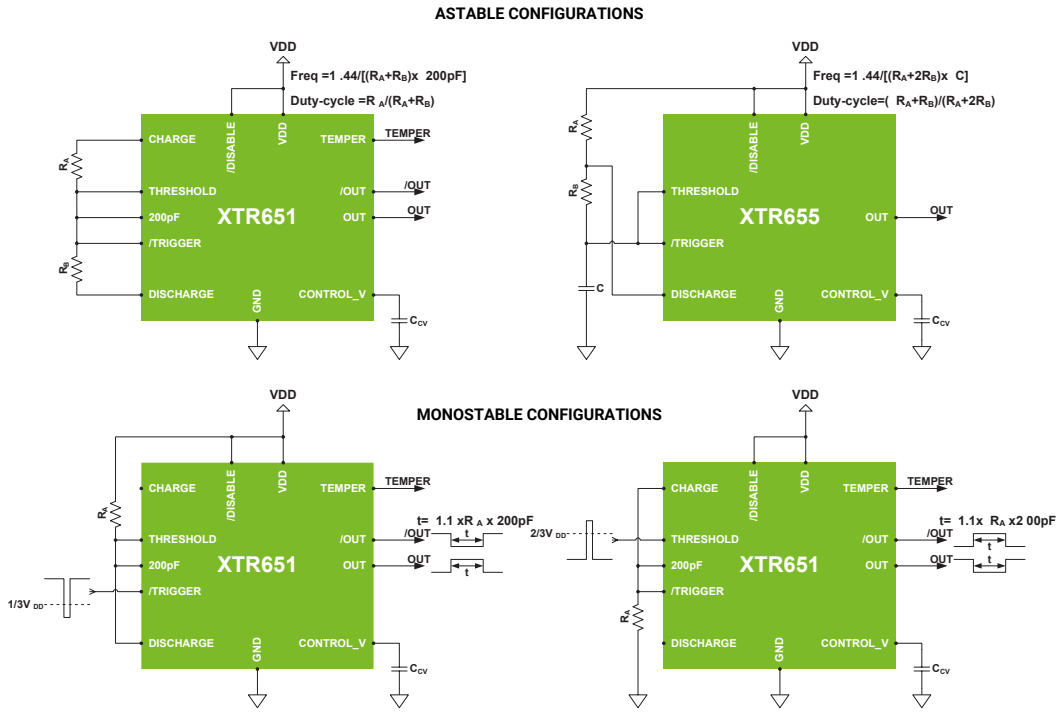

XTR65X

VERSATILE TIMER

ORDERING INFORMATION:

Product		Package Material	Pin Count	Package	OperatingTemperature
Reference	Extension				
XTR650-	TD	-		Tested Die	-60°C to +230°C
XTR651-	D	Ceramic	14	Side brazed DIP	-60°C to +230°C
XTR655-	D	Ceramic	8	Side brazed DIP	-60°C to +230°C

XTR6001X

CRYSTAL OSCILLATOR DRIVER

DESCRIPTION

XTR6001x is a family of small footprint high-temperature, extended lifetime crystal oscillator drivers offering extended functional features and designed for extreme reliability applications such as crystal oscillators, clock and time-base generators. Being able to operate from supply voltages from 2.5V to 5.5V, the XTR6001x crystal oscillator driver can operate with crystals from 32kHz to 25MHz..

Functionality features include selectable prescaler (1/128), programmable frequency divider (1/2/4/8), operation in low-power mode for low frequency crystals, integrated capacitors for crystal loading and stand-by mode which stops oscillations and sets the output buffer to the high-Z state. Using the internal prescaler and frequency divider, division factors from 1 to 1024 can be obtained. The internal crystal driver has automatic gain control to be able to accommodate to the used crystal, with no intervention needed from the customer, as required by some competing products.

Special design techniques were used allowing the XTR6001x parts to offer a precise, robust and reliable operation in critical applications. Full functionality is guaranteed from -60°C to +230°C, though operation well below and above this temperature range is achieved.

XTR6001x family parts have been designed to reduce system cost and ease adoption by reducing the learning curve and providing smart and easy to use features.

Parts from the XTR6001x family are available in ruggedized thru-hole package.

FEATURES

- Operational beyond the -60°C to +230°C temperature range.
- Supply voltage from 2.5V to 5.5V.
- Monolithic crystal oscillator driver controller.
- Operational from 32kHz to 25MHz.
- Automatically adapts to used crystal.
- Integrated capacitors for reduced Bill-of-Material
- Selectable low-power mode.
- Selectable 1/128 prescaler.
- Programmable Freq/1, Freq/2, Freq/4, Freq/8 divider.
- Stand-by functionality with output buffer in High-Z state.
- Separate oscillator and buffer supply pins for low-noise operation.
- Latch-up free.

APPLICATION

- Reliability-critical, Automotive, Aeronautics & Aerospace, Down-hole.
- Crystal oscillators, clock generation, time-base generator, precision timing.

TYPICAL APPLICATION DIAGRAM

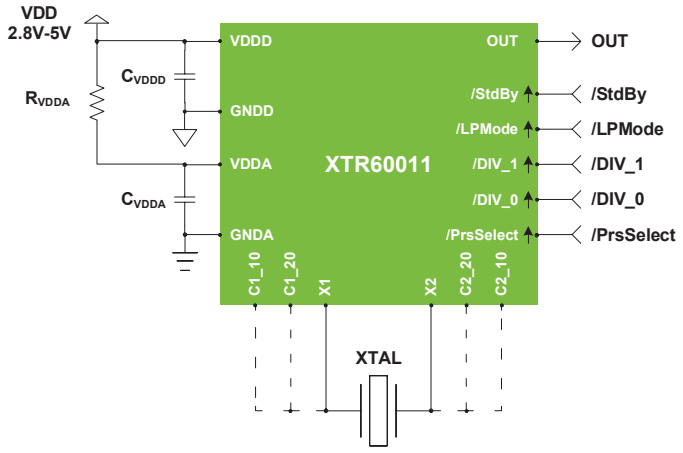

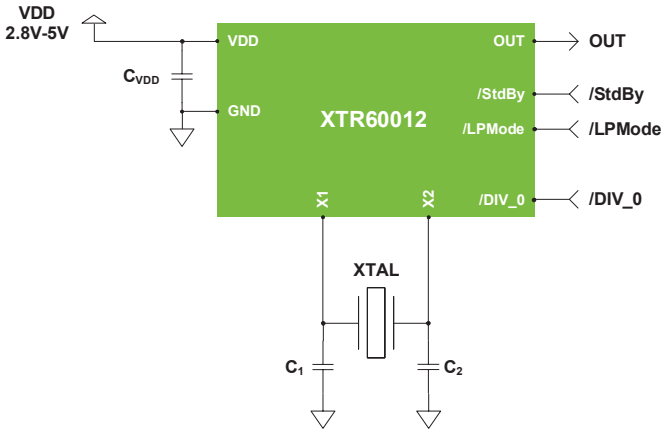

XTR6001X

CRYSTAL OSCILLATOR DRIVER

ORDERING INFORMATION:

Product		Package Material	Pin Count	Package	OperatingTemperature
Reference	Extension				
XTR60011-	D	Ceramic	16	Side brazed DIP	-60°C to +230°C
XTR60012-	D	Ceramic	8	Side brazed DIP	-60°C to +230°C

XTR1N04XX/XTR1N08XX

GENERAL PURPOSE DIODES

DESCRIPTION

This diode family is a general purpose diodes with a reverse voltage. Each part is composed of four independent diodes which can be used individually, in half- or full-bridge rectifier architecture or connected in series or parallel.
Typical applications include rectification, demodulation, voltage blocking, voltage clamping, power supplies, charge pumps and voltage multipliers. Full functionality is guaranteed from -60°C to +230°C, though operation well below and above this temperature range is achieved.

APPLICATIONS

- Reliability-critical, Automotive, Aeronautics & Aerospace, Down-hole.
- General rectification, voltage blocking and clamping, power supplies.

FEATURES

- Operational beyond the -60°C to +230°C temperature range.
- Reverse voltage 55V (for XTR1N04xx) and 90V (for XTR1N08xx).
- Forward current @ 230°C, VF=1.2V:
  - XTR1N0415: IF=280mA per diode.
  - XTR1N0450: IF=800mA per diode.
  - XTR1N0815: IF=216mA per diode.
  - XTR1N0850: IF=660mA per diode.
- Forward voltage @ 85°C, IF=1mA:
  - XTR1N0415: VF=622mV per diode.
  - XTR1N0450: VF=585mV per diode.
  - XTR1N0815: VF=640mV per diode.
  - XTR1N0850: VF=600mV per diode.
- Monolithic design for high-reliability.
- Latch-up free SOI process.

TYPICAL APPLICATION DIAGRAM

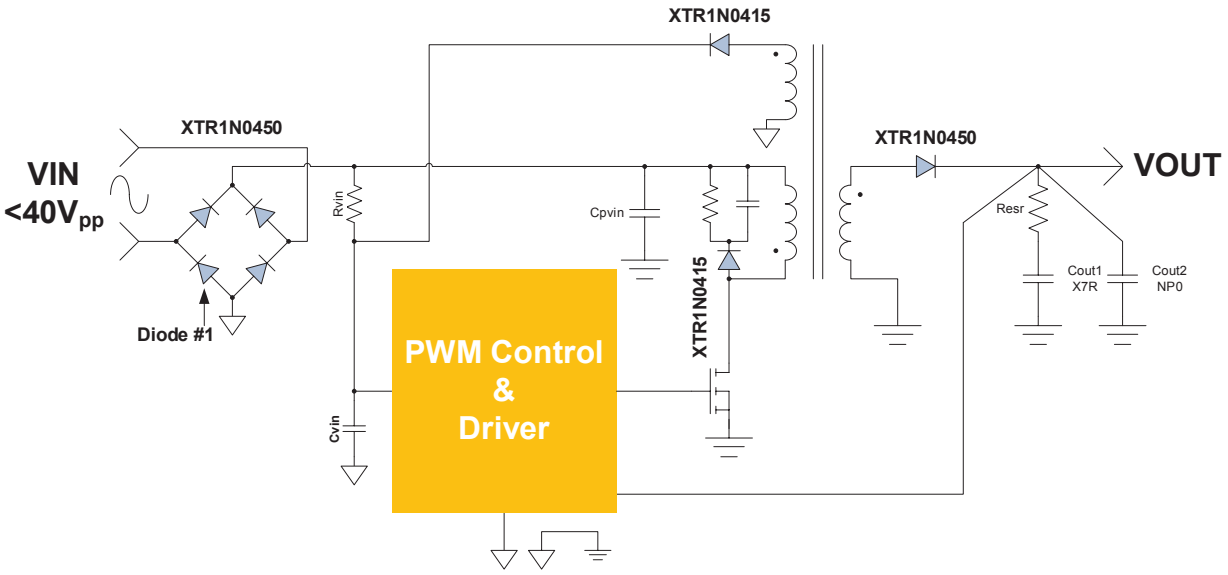

XTR1N04XX/XTR1N08XX

GENERAL PURPOSE DIODES

ORDERING INFORMATION:

Product Reference		Package Material	Pin Count	Package	Operating Temperature	Diode 40V		Diode 80V	
Reference	Extension					V_R>55, I_F 320mA, V_F	V_R>55V, I_F 1150mA, V_F	V_R>90V, I_F 165mA, V_F	V_R>90V, I_F 570mA, V_F
XTR1N0415-	TD	-	-	Tested Die	-60°C to +230°C	✓			
XTR1N0415-	D	Ceramic	8	Side brazed DIP	-60°C to +230°C	✓			
XTR1N0415-	FE	Ceramic	8	Gull-wing flat pack with ePad	-60°C to +230°C	✓			
XTR1N0415-	T	Metal	3	TO18	-60°C to +230°C	✓			
XTR1N0450-	TD	-	-	Tested Die	-60°C to +230°C		✓		
XTR1N0450-	D	Ceramic	8	Side brazed DIP	-60°C to +230°C		✓		
XTR1N0815-	TD	-	-	Tested Die	-60°C to +230°C			✓	
XTR1N0815-	D	Ceramic	8	Side brazed DIP	-60°C to +230°C			✓	
XTR1N0850-	TD	-	-	Tested Die	-60°C to +230°C				✓
XTR1N0850-	D	Ceramic	8	Side brazed DIP	-60°C to +230°C				✓

XTR1K1210

10A, 1200V SiC SCHOTTKY DIODE

DESCRIPTION

XTR1K1210 is 10A, 1200V 4H-SiC junction barrier Schottky diode able to reliably operate from -60°C to +230°C, with junction temperature able to reach +250°C.
This diode has zero reverse recovery charge, which makes it ideally suited for high-frequency and high-efficiency power sys-tems with minimum or no cooling requirements.
XTR1K1210 has been designed to reduce system cost and ease adoption.

APPLICATIONS

- Reliability-critical, Automotive, Aeronautics & Aerospace, Down-hole.
- Power converters, motor drives, switched-mode power supplies, power factor conversion.

FEATURES

- Operational beyond the -60°C to +230°C temperature range.
- Reverse voltage up to 1200V.
- Forward voltage for I_F=10A:
  - V_F=1.7V @+25°C.
  - V_F=3.7V @+230°C.
- Positive temperature coefficient for safe operation and ease paralleling.
- Extremely fast switching not dependent on temperature.
- Essentially no reverse or forward recovery.

TYPICAL APPLICATION DIAGRAM

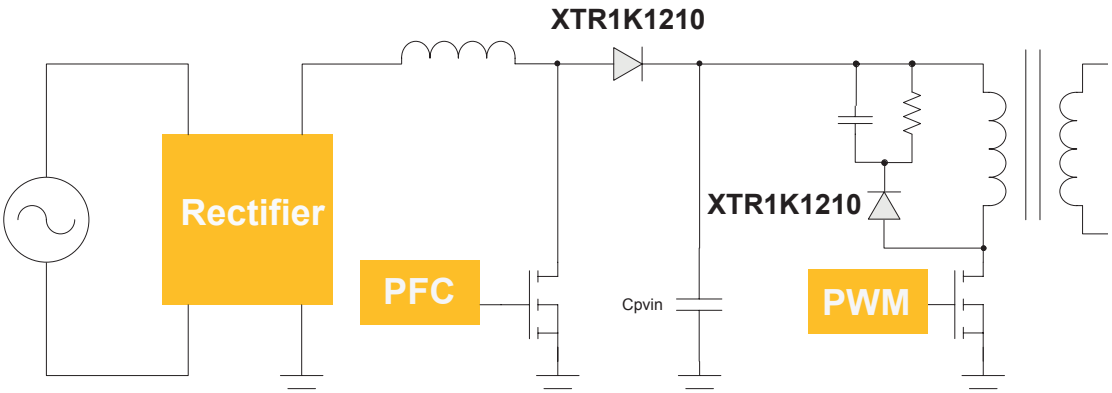

ORDERING INFORMATION:

Product Reference		Package Material	Pin Count	Package	Operating Temperature
Reference	Extension				
XTR1K1210-	T	Metal	3	TO257	-60°C to +230°C

XTR2N0X07

Small-Signal P- and N- Channel MOSFETs

DESCRIPTION

XTR2N0307 (PMOS) and XTR2N0807 (NMOS) are small signal MOSFETs designed to reliably operate over a wide range of temperatures. Full functionality is guaranteed from -60°C to +230°C, though operation well below and above this temperature range is achieved.
Fabricated on a Silicon-on-Insulator (SOI) process, XTR2N0307 and XTR2N0807 parts offer reduced leakage currents while providing moderate drain currents a low RDS(on). These features allow XTR2N0307 and XTR2N0807 parts to be ideally suited for switching and signal amplification applications.

APPLICATIONS

- Reliability-critical, Automotive, Aeronautics & Aerospace, Down-hole.
- Signal amplification, sensor interfacing, level shifting, signal switching, power supply.

FEATURES

- Operational beyond the -60°C to +230°C temperature range.
- Minimum BV_{DSS} = -30V (PMOS) and 90V (NMOS)
- Allowed V_{GS} range -5.5V to +5.5V.
- Low $_{RDS\ (on)}$
  - XTR2N0307: 6.7 Ω @ 230°C
  - XTR2N0807: 9.5 Ω @ 230°C
- Maximum I_D:
  - XTR2N0307: 1 A @ 230°C
  - XTR2N0807: 600 mA @ 230°C
- Monolithic design for high-reliability.
- Latch-up free SOI process.

TYPICAL APPLICATION DIAGRAM

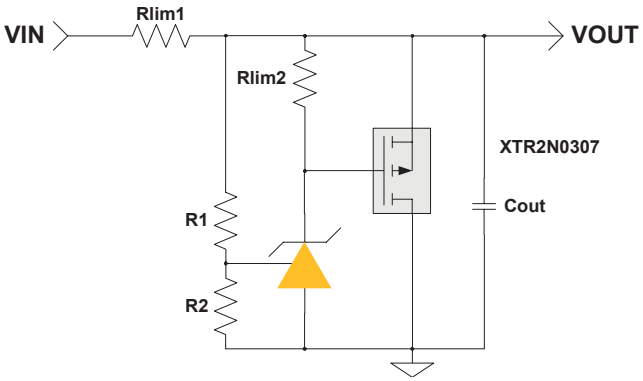

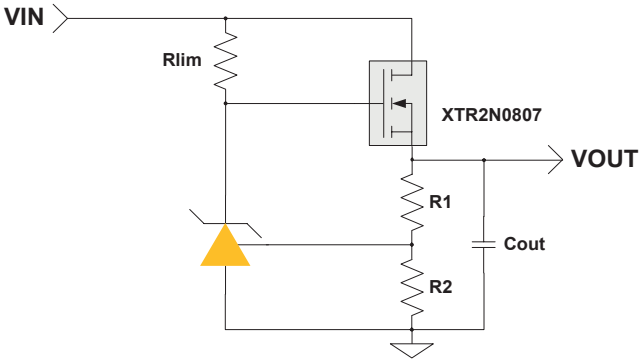

ORDERING INFORMATION:

Product Reference		Package Material	Pin Count	Package	Operating Temperature	RDS_{ON}	MaximumI_D
Reference	Extension						
XTR2N0307-	TD	-	-	Tested Die	-60°C to +230°C	6.70 Ω	1.0 A
XTR2N0307-	T	Metal	3	TO18	-60°C to +230°C	6.70 Ω	1.0 A
XTR2N0307-	FE	Ceramic	8	Gull-wing flat pack with ePad	-60°C to +230°C	6.70 Ω	1.0 A
XTR2N0807-	TD	-	-	Tested Die	-60°C to +230°C	9.50 Ω	0.6 A
XTR2N0807-	T	Metal	3	TO18	-60°C to +230°C	9.50 Ω	0.6 A
XTR2N0807-	FE	Ceramic	8	Gull-wing flat pack with ePad	-60°C to +230°C	9.50 Ω	0.6 A

XTR2N03XX/XTR2N05XX

P-CHANNEL POWER MOSFETs

DESCRIPTION

XTR2N03xx/XTR2N05xx transistor family is a P-channel power MOSFETs designed to reliably operate over a wide range of temperatures. Full functionality is guaranteed from -60°C to +230°C, though operation well below and above this temperature range is achieved.
Fabricated on a Silicon-on-Insulator (SOI) process, XTR2N03xx and XTR2N05xx parts offer reduced leakage currents while providing high drain currents a low $R_{DS\ (on)}$. These features allow XTR2N03xx and XTR2N05xx parts to be ideally suited for switching applications.
XTR2N03xx and XTR2N05xx parts have been designed to reduce system cost and ease adoption by reducing the learning curve and providing smart and easy to use features.

APPLICATIONS

- Reliability-critical, Automotive, Aeronautics & Aerospace, Down-hole.
- DC/DC converters, power switching, motor control, power inverters, power linear regulators, power supply.

FEATURES

- Operational beyond the -60°C to +230°C temperature range.
- Minimum BV_{DSS} = -30V (for XTR2N03xx) and -40V (for XTR2N05xx)
- Allowed V_{GS} range –5.5V to +5.5V.
- Low $_{RDS\ (on)}$
  - XTR2N0325: 1.05 Ω @ 230°C
  - XTR2N0350: 0.48 Ω @ 230°C
  - XTR2N0525: 2.3 Ω @ 230°C
  - XER2N0525: 2.3 Ω @ 230°C
  - XTR2N0550: 1.1 Ω @ 230°C
- Maximum Peak I_D:
  - XTR2N0325: 7.5A @ 230°C
  - XTR2N0350: 16.5A @ 230°C
  - XTR2N0525: 5.3A @ 230°C
  - XER2N0525 : 5.3A @ 230°C
  - XTR2N0550: 11.7A @ 230°C
- Ruggedized 3-lead TO257, 8-lead side brazed DIP and 8-lead SOIC with ePAD.
- Also available as tested dies.

TYPICAL APPLICATION DIAGRAM

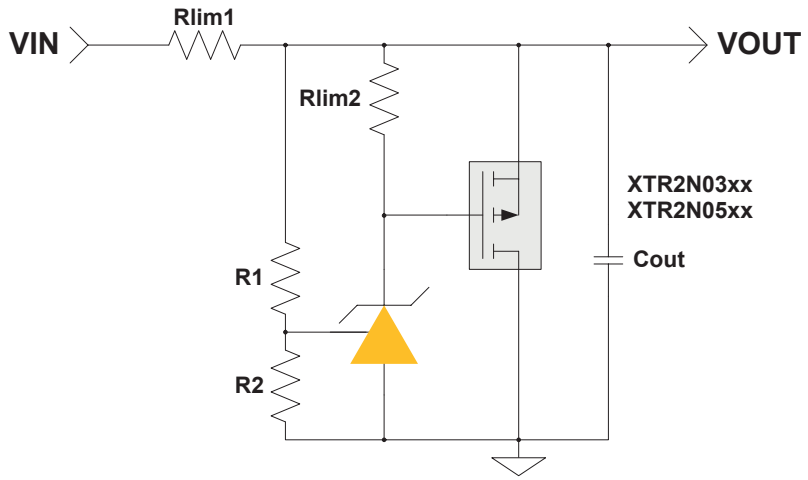

XTR2N03XX/XTR2N05XX

P-CHANNEL POWER MOSFETs

ORDERING INFORMATION:

Product Reference		Package Material	Pin Count	Package	Operating Temperature	Minimum BV_{DSS}	$RDS_{(ON)}$ @ 230°C	Maximum Peak I_D @230°C
Reference	Extension							
XTR2N0325-	TD	-	-	Tested Die	-60°C to +230°C	-30V	1.05 Ω	7.5 A
XTR2N0325-	D	Ceramic	8	Side brazed DIP	-60°C to +230°C	-30V	1.05 Ω	7.5 A
XTR2N0325-	FE	Ceramic	8	Gull-wing flat pack with ePad	-60°C to +230°C	-30V	1.05 Ω	7.5 A
XTR2N0350-	TD	-	-	Tested Die	-60°C to +230°C	-30V	0.48 Ω	16.5 A
XTR2N0350-	T	Metal	3	TO-257	-60°C to +230°C	-30V	0.48 Ω	16.5 A
XTR2N0525-	TD	-	-	Tested Die	-60°C to +230°C	-40V	2.3 Ω	5.3 A
XTR2N0525-	D	Ceramic	8	Side brazed DIP	-60°C to +230°C	-40V	2.3 Ω	5.3 A
XTR2N0525-	FE	Ceramic	8	Gull-wing flat pack with ePad	-60°C to +230°C	-40V	2.3 Ω	5.3 A
XTR2N0550-	TD	-	-	Tested Die	-60°C to +230°C	-40V	1.1 Ω	11.7 A

Product Reference		Package Material	Pin Count	Package	Operating Temperature	Minimum BV_{DSS}	$RDS_{(ON)}$ @ 230°C	Maximum Peak I_D @230°C
Reference	Extension							
XER2N0525-	S	Plastic	8	Plastic SOIC	-50°C to +175°C	-40V	2.3 Ω	5.3 A

XTR2N04XX/XTR2N08XX

N-CHANNEL POWER MOSFETs

DESCRIPTION

XTR2N04xx/XTR2N08xx transistor family is a N-channel power MOSFETs designed to reliably operate over a wide range of temperatures. Full functionality is guaranteed from -60°C to +230°C, though operation well below and above this temperature range is achieved.
Fabricated on a Silicon-on-Insulator (SOI) process, XTR2N04xx and XTR2N08xx parts offer reduced leakage currents while providing high drain currents a low $R_{DS\ (on)}$. These features allow XTR2N04xx and XTR2N08xx parts to be ideally suited for switching applications.
XTR2N04xx and XTR2N08xx parts have been designed to reduce system cost and ease adoption by reducing the learning curve and providing smart and easy to use features.

APPLICATIONS

- Reliability-critical, Automotive, Aeronautics & Aerospace, Down-hole.
- DC/DC converters, power switching, motor control, power inverters, power linear regulators, power supply.

FEATURES

- Operational beyond the -60°C to +230°C temperature range.
- Minimum BV_{DSS} = 55V (for XTR2N04xx) and 90V (for XTR2N08xx).
- Allowed V_{GS} range −5.5V to +5.5V.
- Low $_{RDS(on)}$:
  - XTR2N0425: 0.560 Ω @ 230°C
  - XTR2N0450: 0.255 Ω @ 230°C
  - XTR2N0825: 1.54 Ω @ 230°C
  - XTR2N0850: 0.70 Ω @ 230°C
- Maximum I_D:
  - XTR2N0425: 4.7A @ 230°C
  - XTR2N0450: 10.3A @ 230°C
  - XTR2N0825: 3.4A @ 230°C
  - XTR2N0850: 7.4A @ 230°C
- Ruggedized 3-lead TO257, 8-lead side brazed DIP and 8-lead FE with ePAD.
- Also available as tested dies.

TYPICAL APPLICATION DIAGRAM

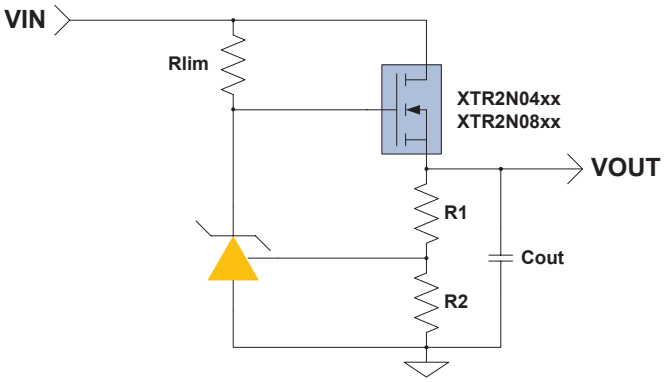

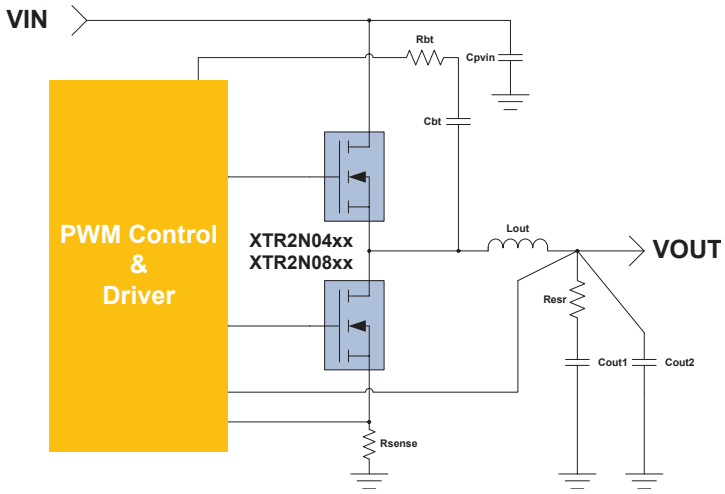

XTR2N04XX/XTR2N08XX

N-CHANNEL POWER MOSFETs

ORDERING INFORMATION:

Product Reference		Package Material	Pin Count	Package	Operating Temperature	Minimum BV_{DSS}	$RDS_{(ON)}$ @ 230°C	Maximum Peak I_D @230°C
Reference	Extension							
XTR2N0425-	TD	-	-	Tested Die	-60°C to +230°C	55V	0.560 Ω	4.7 A
XTR2N0425-	D	Ceramic	8	Side brazed DIP	-60°C to +230°C	55V	0.560 Ω	4.7 A
XTR2N0425-	T	Metal	3	TO257	-60°C to +230°C	55V	0.560 Ω	4.7 A
XTR2N0450-	TD	-	-	Tested Die	-60°C to +230°C	55V	0.255 Ω	10.3 A
XTR2N0825-	TD	-	-	Tested Die	-60°C to +230°C	90V	1.54 Ω	3.4 A
XTR2N0825-	D	Ceramic	8	Side brazed DIP	-60°C to +230°C	90V	1.54 Ω	3.4 A
XTR2N0825-	FE	Ceramic	8	Gull-wing flat pack with ePad	-60°C to +230°C	90V	1.54 Ω	3.4 A
XTR2N0850-	TD	-	-	Tested Die	-60°C to +230°C	90V	0.70 Ω	7.4 A
XTR2N0850-	T	Metal	3	TO257	-60°C to +230°C	90V	0.70 Ω	7.4 A

XTR54000

MULTI-FUNCTION LOGIC GATES

DESCRIPTION

XTR54000 is a configurable logic device able to provide four different functions from the same silicon part. The full featured part is available in a 16-pin package where two pins are used to select the corresponding logic function of the other left-aligned 14 pins. Available functions are 2-input NAND, NOR, XOR, IN-VERTER.
The logic function can also be selected during assembly into 14-pin packages offering pin-to-pin compatibility with standard parts from the 54HC family.
In all configurations, all inputs are Schmitt trigger for increased noise margin.
XTR54000 parts have been designed to reduce system cost and ease adoption by reducing the learning curve and providing smart and easy to use features.
Parts from the XTR54000 family are available in ruggedized SMT and thru-hole packages. Parts are also available as tested dies.

FEATURES

- Operational beyond the -60°C to +230°C temperature range.
- Supply voltage from 2.8V to 5.5V.
- Schmitt trigger inputs.
- Compatible with NAND, NOR, XOR, INVERTER functions of the standard 54HC family.
- Latch-up free.

APPLICATIONS

- Reliability-critical, Automotive, Aeronautics & Aerospace, Down-hole.
- Logic function generation, combinatorial logic.

SET_1	SET_0	Logic function	Equivalentpart
0	0	Quad 2-input NAND	54HC132
0	1	Quad 2-input NOR	54HC7002
1	0	Quad 2-input XOR	54HC86
1	1	Hex INVERTER.	54HC14

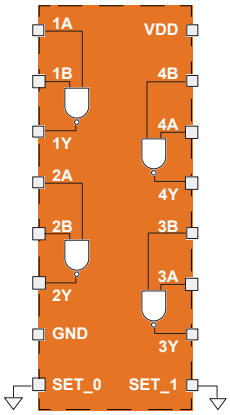

SET 0=0 / SET 1=0
Equivalent to 54HC132
Quad Schmitt Trigger
2-input NAND

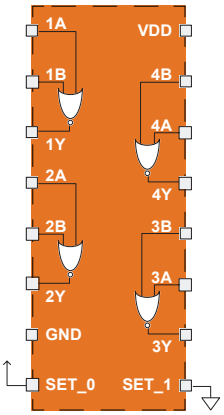

SET 0=1 / SET 1=0
Equivalent to 54HC7002
Quad Schmitt Trigger
2-input NOR

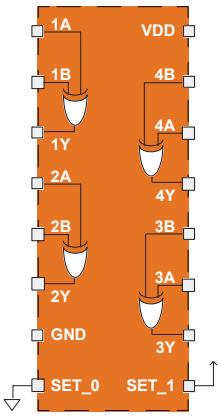

SET 0=0 / SET 1=1
Equivalent to 54HC86
Quad Schmitt Trigger
2-input XOR

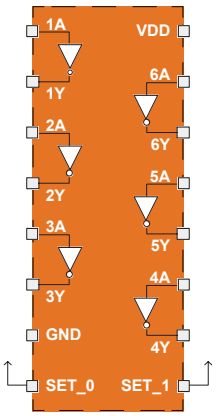

SET 0=1 / SET 1=1
Equivalent to 54HC14
Hex Schmitt Trigger
INVERTER

XTR54000

MULTI-FUNCTION LOGIC GATES

ORDERING INFORMATION:

Product		Package Material	Pin Count	Package	Operating Temperature
Reference	Extension				
XTR54000-	TD	-	-	Tested Die	-60°C to +230°C
XTR54000-	D	Ceramic	16	Side brazed DIP	-60°C to +230°C
XTR54000-	S	Ceramic	16	SOIC	-60°C to +230°C

XTR5001X

BIDIRECTIONAL LEVEL TRANSLATORS

DESCRIPTION

The XTR5001x is a family of bidirectional level translators that can be used for data communication between devices or systems operating at different supply voltages. XTR5001x is able to operate from -60°C to +230°C, with supply voltages from 2.5V to 5.5V.
In XTR50011 or XTR50012, the communication direction between An and Bn ports is automatically and independently sensed by the circuit. This allows simultaneous data flow in any direction.
In XTR50014 or XTR50015, the DIR logic-level input is used to control the data flow direction. The DIR input can be powered by either VCCA or VCCB. This brings more flexibility at system level. Parts from the XTR5001x family are available in ruggedized SMT and through-hole packages. Parts are also available as tested dies.

APPLICATIONS

- Reliability-critical, Automotive, Aeronautics & Aerospace, Down-hole.
- Level shifted data transmission.

FEATURES

- Operational beyond the -60°C to +230°C temperature range.
- Supply voltage from 2.5V to 5.5V.
- OE/DIR input can be referenced to VCCA or VCCB.
- Up to ±8mA output drive (Directional).
- Max Data Rates (Bidirectional) :
  - 16Mbps (Translate to 5V)
  - 12Mbps (Translate to 3.3V)
  - 8Mbps (Translate to 2.5V)
- Max Data Rates (Directional) :
  - 60Mbps (3.3 to 5V)
  - 40Mbps (2.5 to 5V)
  - 30Mbps (Translate to 3.3V)
  - 20Mbps (Translate to 2.5V)

TYPICAL APPLICATION DIAGRAM

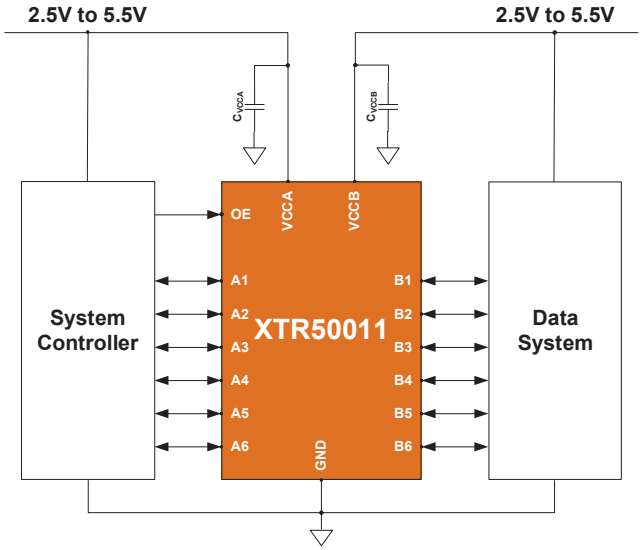

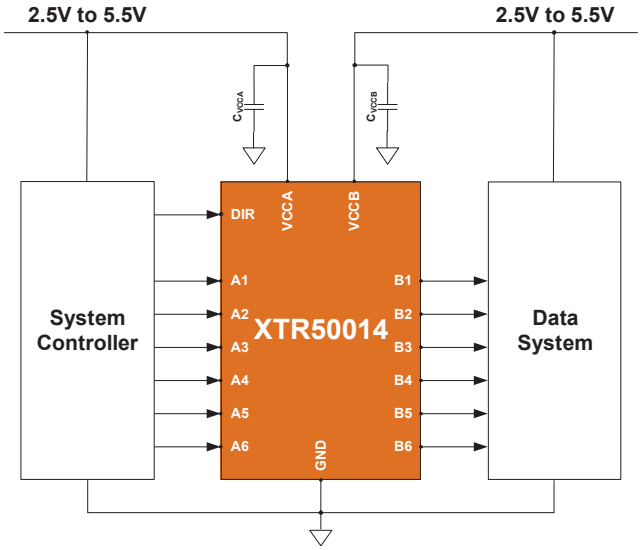

XTR5001X

BIDIRECTIONAL LEVEL TRANSLATORS

ORDERING INFORMATION:

Product		Package Material	Pin Count	Package	Operating Temperature	Function
Reference	Extension					
XTR50010-	TD	-	-	Tested Die	-60°C to +230°C	-
XTR50011-	D	Ceramic	16	Side brazed DIP	-60°C to +230°C	Bidirectional Translator
XTR50014-	S	Ceramic	16	SOIC	-60°C to +230°C	Unidirectional Translator
XTR50014-	D	Ceramic	16	Side brazed DIP	-60°C to +230°C	Unidirectional Translator

XTR5417X/XTR541G7X

EDGE-TRIGGERED D FLIP-FLOP FAMILY

DESCRIPTION

The XTR5417x is a family of positive-edge-triggered D-type flip-flops. XTR54175 have four D-type flip-flops with individual data input D and both Q and $\overline{Q}$ outputs. The common clock CK and master reset $\overline{MR}$ inputs trigs and resets all flip-flops simultaneously.
XTR541G74 have a single D-type flip-flop with data D and clock CK inputs, Q and $\overline{Q}$ outputs, and set $\overline{S}$ and reset $\overline{R}$ inputs.
Parts from the XTR5417x family are available in ruggedized through-hole package. Parts are also available as tested dies.

FEATURES

- Wide operating supply voltage from 2.8V to 5.5V.
- Operational beyond the -60°C to +230°C temperature range.
- Up to ±8mA output drive.
- Schmitt-Trigger Inputs allow better switching noise immunity.
- Ruggedized DIP packages.
- Also available as tested dies.

APPLICATIONS

- Reliability-critical, Automotive, Aeronautics & Aerospace, Down-hole.

PRODUCT HIGHLIGHTS

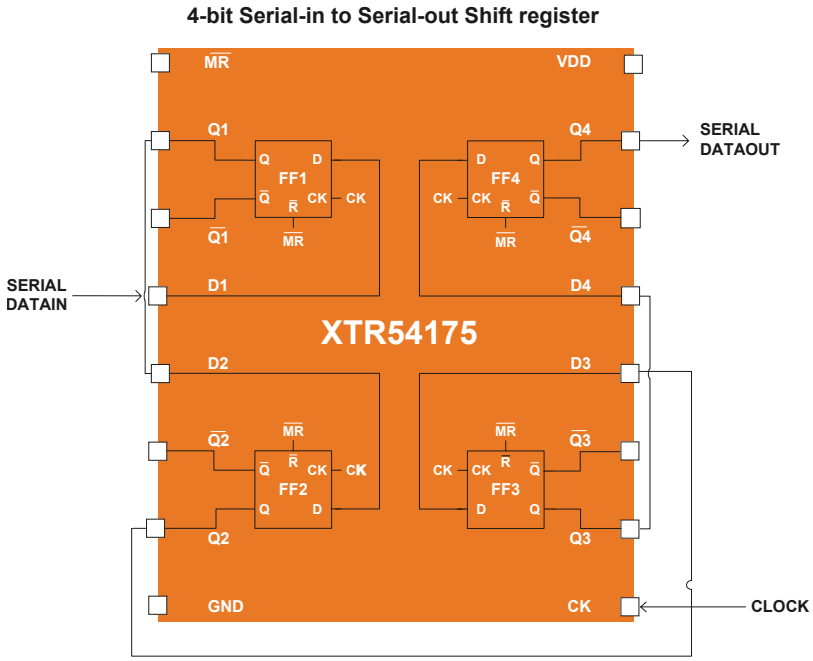

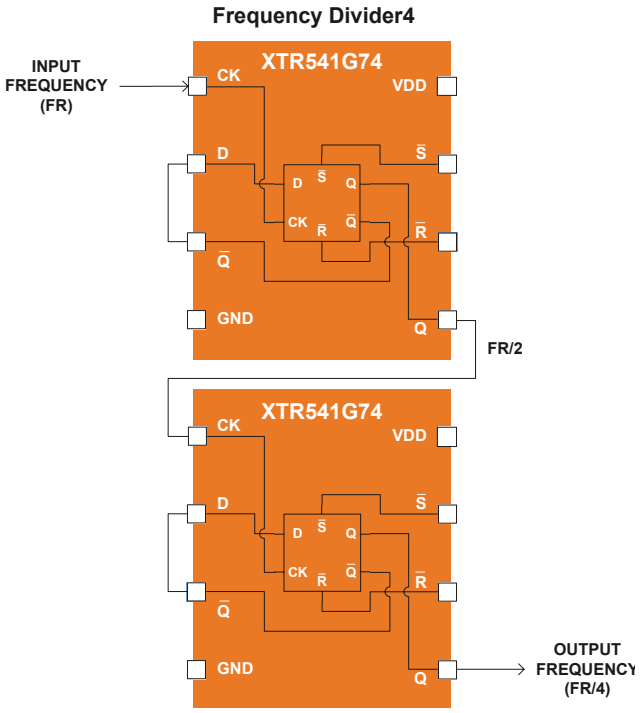

XTR5417X/XTR541G7X

EDGE-TRIGGERED D FLIP-FLOP FAMILY

ORDERING INFORMATION:

Product		Package Material	Pin Count	Package	Operating Temperature
Reference	Extension				
XTR54170-	TD	-	-	Tested Die	-60°C to +230°C
XTR54175-	D	Ceramic	16	Side brazed DIP	-60°C to +230°C
XTR541G74-	D	Ceramic	8	Side brazed DIP	-60°C to +230°C

XTR4001X

ISOLATED TWO CHANNELS TRANSCEIVERS

DESCRIPTION

The XTR4001x implements a high-temperature dual-channel (2TX/RX) isolated data transceiver. It can be used as a general purpose isolated transceiver. It is also well suited for isolated data communication between a microcontroller or a PWM controller, with the intelligent power gate driver XTR2602x. The galvanic isolation is achieved by external high temperature 1:1 pulse transformers.
The XTR4001x integrates in a single package 2 transceivers (two full duplex channels). The implementation of 2 full duplex TX/RX isolated channels requires 2 XTR4001x, one being connected to one side of the transformers and one to the other side. When used with XTR2602x, the XTR4001x allows implementing a 2 full duplex TX/RX channels with only one instance of XTR2602x. Indeed, the XTR2602x transceiver is fully compatible with the XTR40010. The complete solution is optimized to minimize the size of the transformer, the number of external components, the transmission delay (<120ns) and to maximize the noise margin, even in harsh dV/dt conditions (50kV/µs across 2pF of inter-winding capacitance).

FEATURES

- Supply voltage 3.3V to 5.5V.
- Dual Transmitter/Receiver (TX/RX) channels.
- Operating junction temperature from -60°C to +230°C.
- Data rate up to 4.2 Mbits/second per channel.
- Transient common mode current immunity of 100mA (50kV/µs across 2pF of inter-winding capacitance).
- Hysteresis on digital input for noise immunity.
- Enable control signal on both TX and RX functions.
- OOK (On-Off Keying) modulation.
- 3 bits programmable carrier frequency for EMC compliance.
- Configurable TX and RX modulation polarity.
- Latch-up free.
- Ruggedized SMT and DIP packages (CSOIC28).
- Also available as tested dies.

APPLICATIONS

- Reliability-critical, Automotive,Aeronautics & Aerospace, Down-hole.
- Intelligent Power Modules (IPM).
- Power conversion, power generation and motor drive in aeronautics.
- Isolated gate drive for IGBT, MOSFET, JFET and SiC Transistors
- Isolated sensor interfaces.
- Isolated power inverters.

TYPICAL APPLICATION DIAGRAM

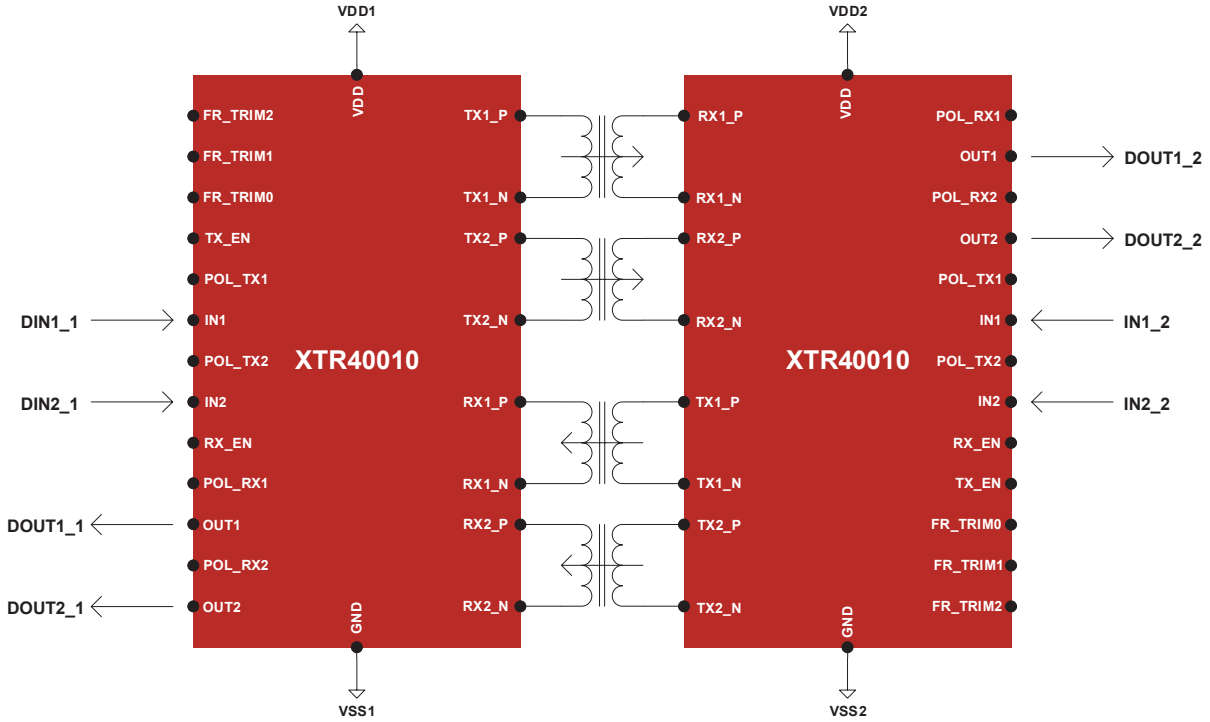

XTR4001X

ISOLATED TWO CHANNELS TRANSCEIVERS

ORDERING INFORMATION:

Product		Package Material	Pin Count	Package	Operating Temperature
Reference	Extension				
XTR40010-	TD	-	-	Tested Die	-60°C to +230°C
XTR40011-	S	Ceramic	28	SOIC	-60°C to +230°C
XTR40011-	D	Ceramic	28	Side brazed DIP	-60°C to +230°C
XTR40012-	S	Ceramic	16	SOIC	-60°C to +230°C

PACKAGE OUTLINES

CDFP8

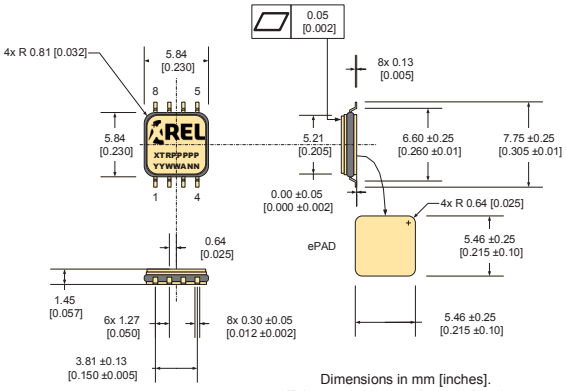

CDFP10

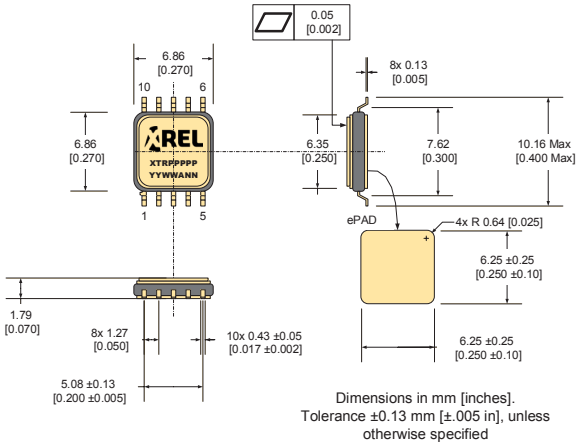

SOIC16

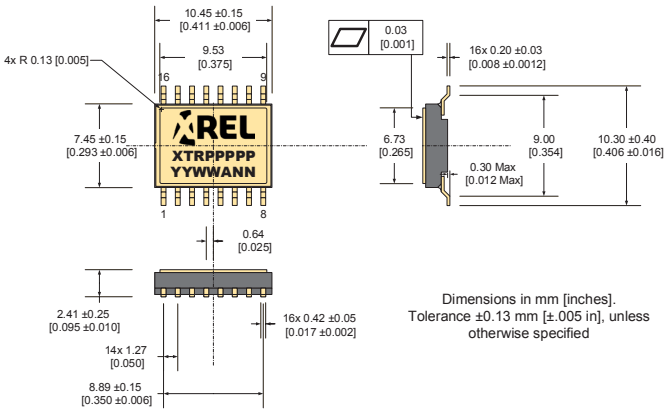

Dimensions in mm [inches]

SOIC24

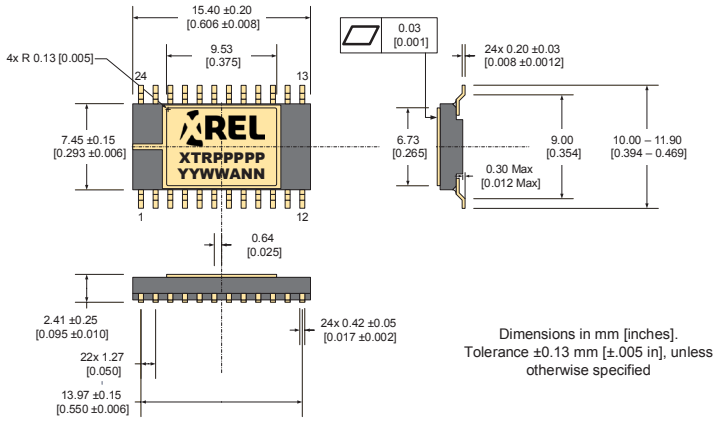

SOIC28

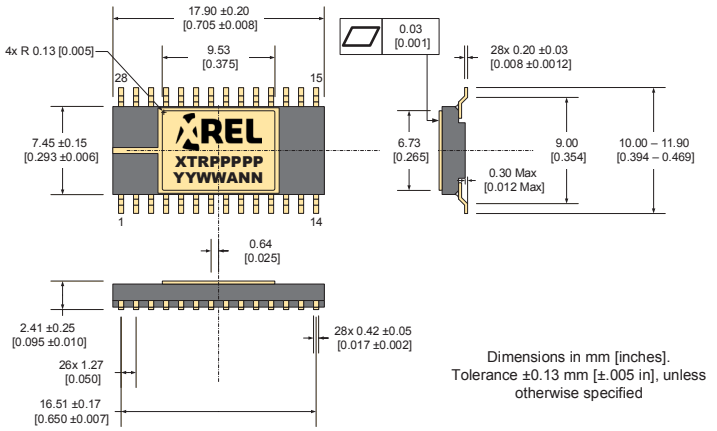

CDIP8

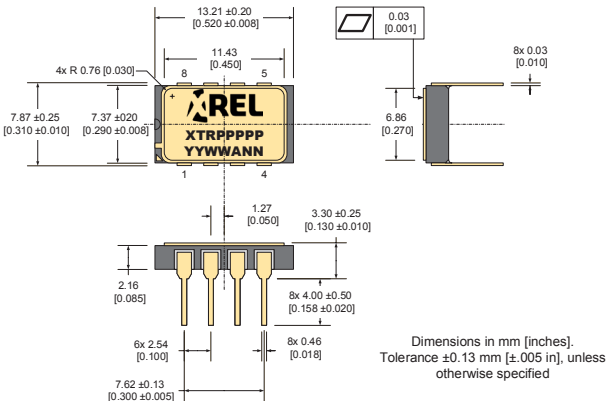

Dimensions in mm [inches]

PACKAGE OUTLINES

CDIP14

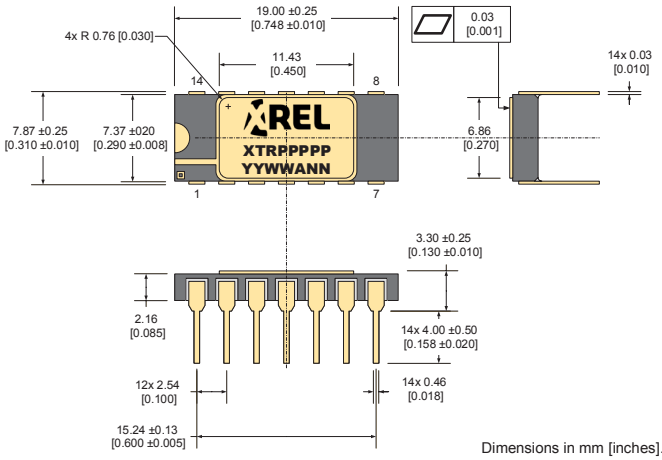

Dimensions in mm [inches].
Tolerance ±0.13 mm [±.005 in], unless otherwise specified

CDIP16

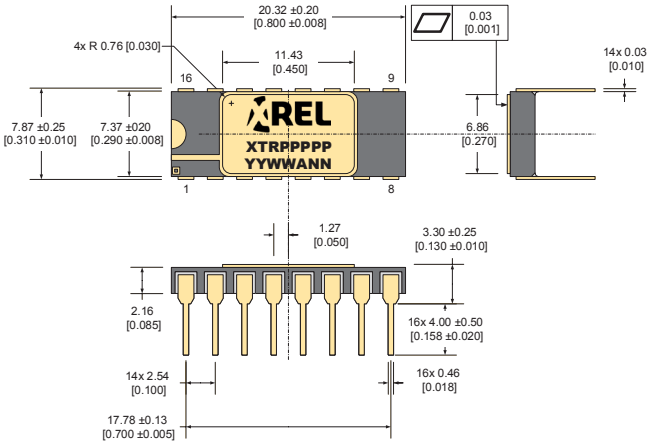

Dimensions in mm [inches].
Tolerance ±0.13 mm [±.005 in], unless otherwise specified

CDIP24

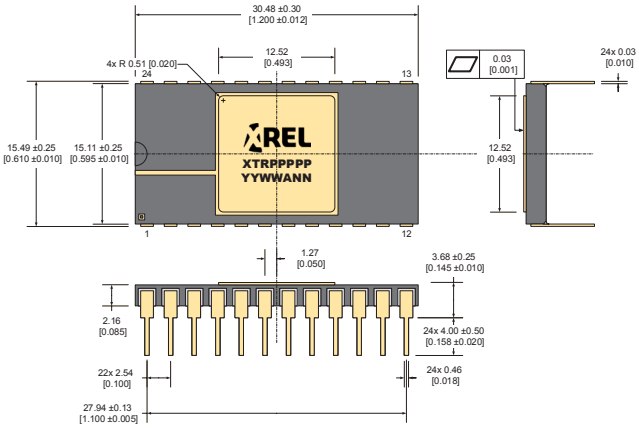

Dimensions in mm [inches].
Tolerance ±0.13 mm [±.005 in], unless otherwise specified

CDIP28

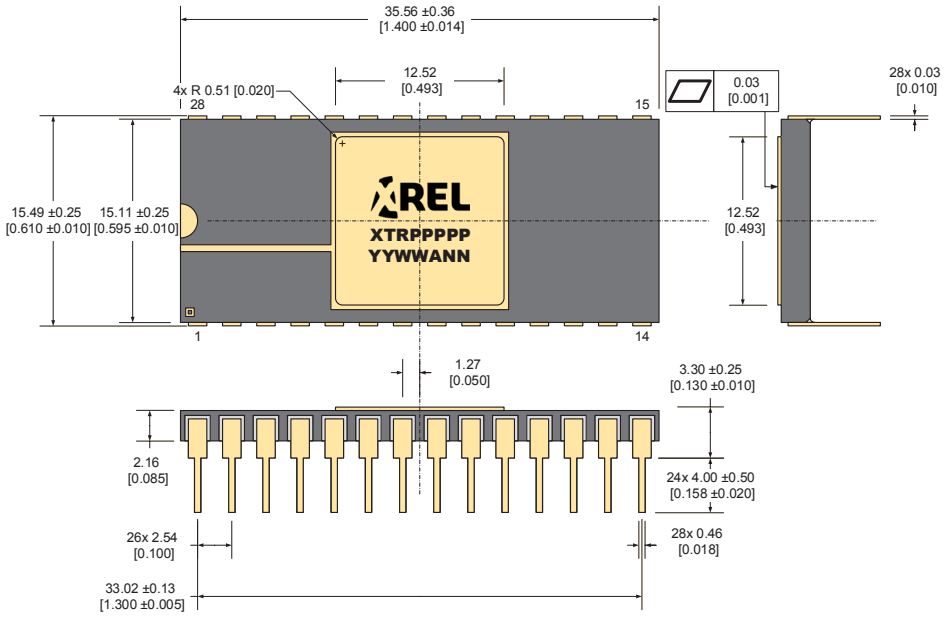

Dimensions in mm [inches]

TO18-3

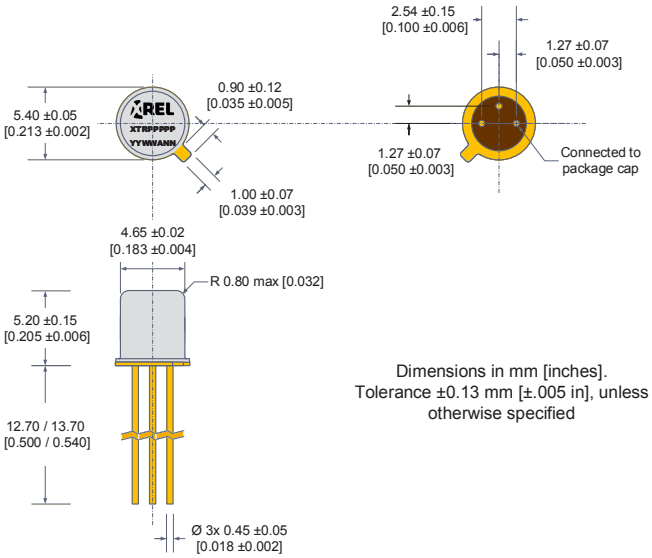

Dimensions in mm [inches].
Tolerance ±0.13 mm [±.005 in], unless otherwise specified

PACKAGE OUTLINES

TO257-3 1200V

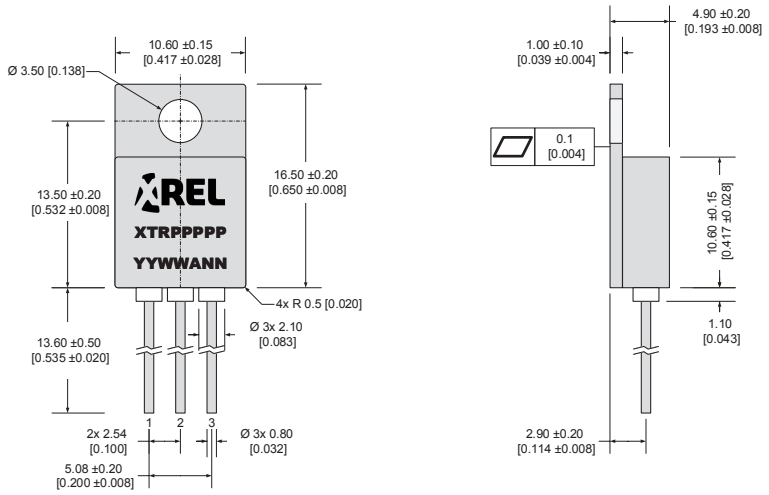

TO257-3

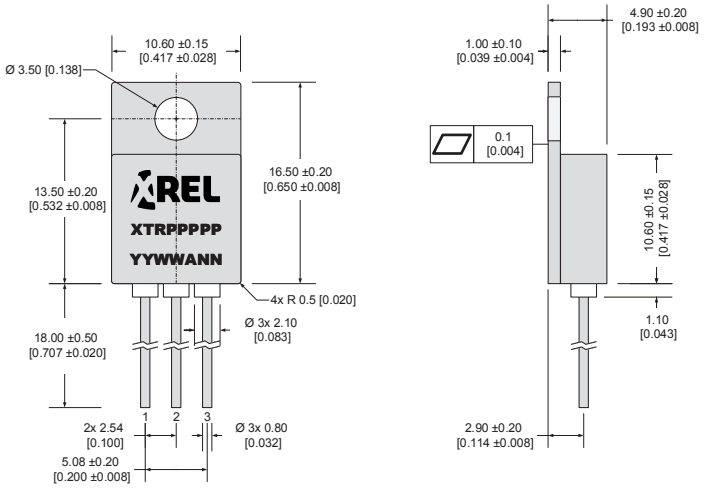

Dimensions in mm [inches].

TO257-6

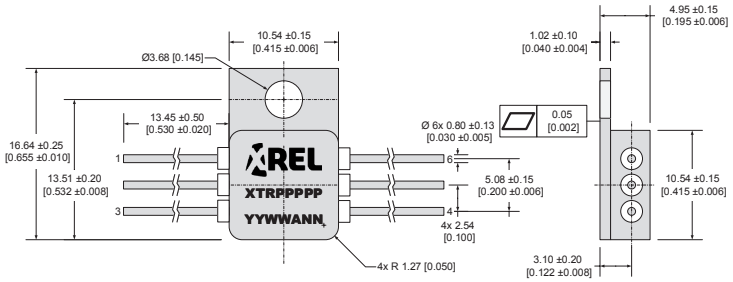

Dimensions in mm [inches].
Tolerance ±0.13 mm [±.005 in], unless otherwise specified

Dimensions in mm [inches]

TO254-3

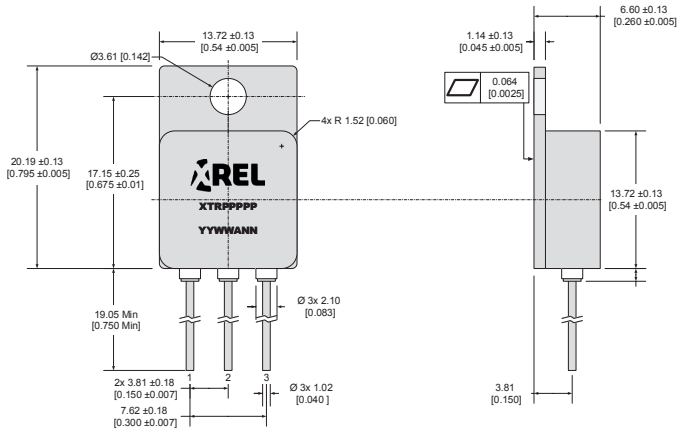

Dimensions in mm [inches].
Tolerance ±0.13 mm [±.005 in], unless otherwise specified

LJCC28

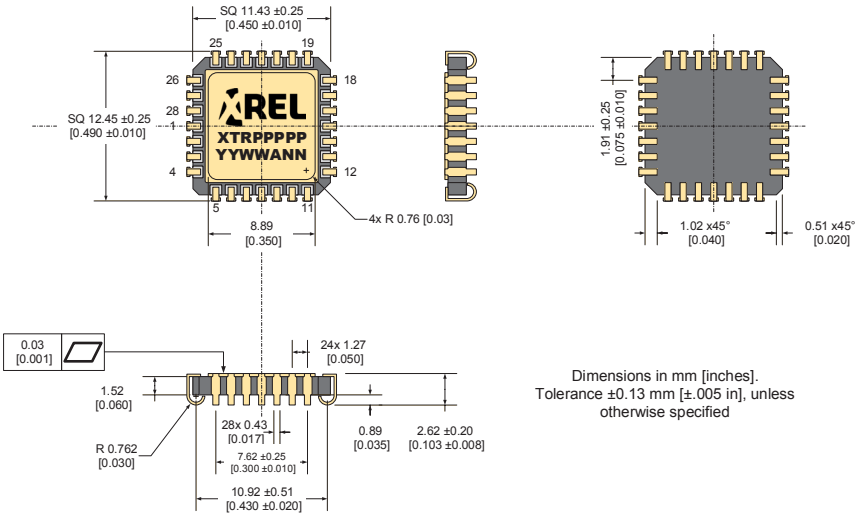

Dimensions in mm [inches].
Tolerance ±0.13 mm [±.005 in], unless otherwise specified

LJCC52

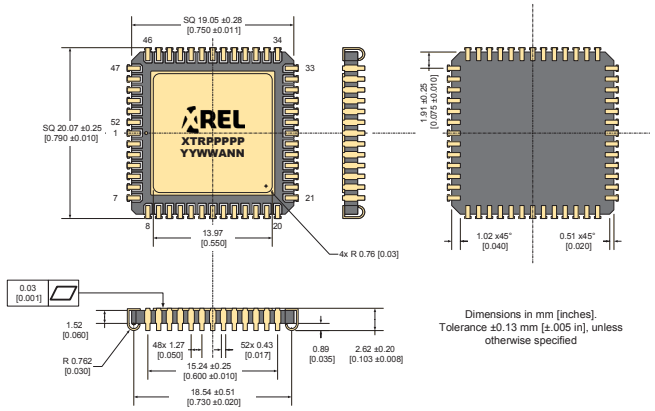

Dimensions in mm [inches].
Tolerance ±0.13 mm [±.005 in], unless otherwise specified

Dimensions in mm [inches]

PACKAGE OUTLINES

PSOIC8

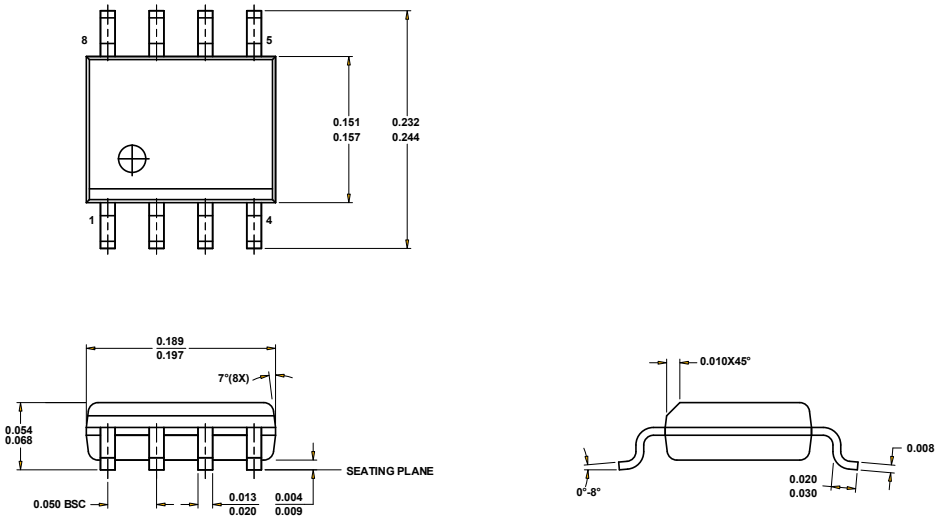

Dimensions in mm [inches]

Plastic QFP44

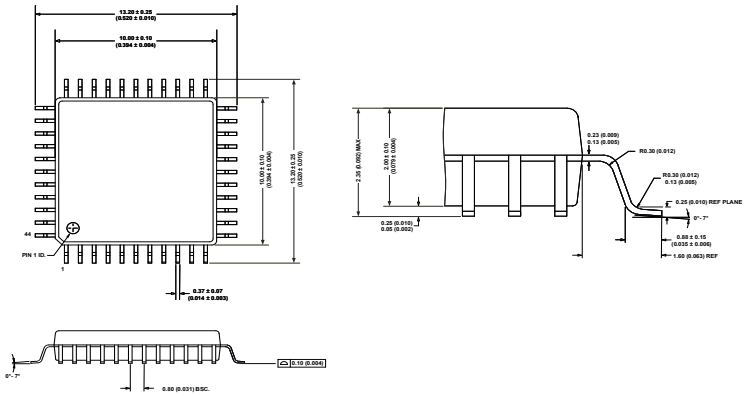

REL
SEMICONDUCTOR

REPRESENTATIVE

USA
Joule Sales
+ 1 512 354 8655
sales@joulesales.com
www.joulesales.com

DISTRIBUTORS

GERMANY, AUSTRIA, ITALY NORWAY, SWEDEN, FINLAND
Protec GmbH
+ 49 -89 6602923
sales@protec-semi.de
www.protec-semi.com

SWITZERLAND, AUSTRIA
MPI Distribution
+ 41 56 483 34 44
j.jutzi@mpi.ch
www.mpi.ch

SOUTH AFRICA
RFIBER Solutions
+ 27 12 667 5212
+27 82 654 3665
richard@rfibersolutions.com
www.rfibersolutions.com

TURKEY
TMS Elektronik
+ 90 216 373 2515
info@tms-elektronic.com
www.tms-elektronik.com

UK, IRELAND
Charcroft Electronics Ltd
+ 44 15 91 610 408
sales@charcroft.com
www.charcroft.com

ISRAEL
SEGTRO LTD
+ 972-50-5772333
ami@segtro.com
www.segtro.com

USA
Trendsetter Electronics
+ 1 512 354 8655
sales@trendsetter.com
www.trendsetter.com

RUSSIA
I. C. Quest
+ 7 81378 32755
info@icquest.ru
www.icquest.ru

LATIN AMERICA
K-1 Technologies
+ 1 (727) 342-1111
nicola@k1tech.net
www.k1tech.net

CHINA
Walasey
+ 852 23571676
info@walasey.com.hk
www.walasey.com

RUSSIA
Macrogoup
+ 7 812 370 60 70
power@macrogroup.ru
www.macrogroup.ru

JAPAN
Chronix Inc
+ 81 3 5322 7191
sales@chronix.co.jp
www.chronix.co.jp

CHINA
Phoenix Hong Kong Technology
+ 852 3463 3420
frank.yang@hkwutong.com
www.hkwutong.com

CHINA
MAGICALSEMI Elec tech Co,Ltd
+ 029-88815490
alicedoenj@163.com
www.magicalsemi.com

CONTACTS

EASii IC X-REL semi

Headquarter
90, avenue Leon Blum BP 2612
38036 Grenoble Cedex 2
FRANCE
www.easii-ic.com
Support : support.xrel@easii-ic.com
Sales : sales.xrel@easii-ic.com
Phone : +33 4 56 580 580

www.x-relsemi.com