Standard Resistors Series

Databook

Standard Resistors
Resistance Boxes
Custom Products

alpha-elec.co.jp

Alpha Electronics | Part of VPG Foil Resistors

Standard Resistors

Disclaimer

ALL PRODUCTS, PRODUCT SPECIFICATIONS AND DATA ARE SUBJECT TO CHANGE WITHOUT NOTICE.

Vishay Precision Group, Inc., its affiliates, agents, and employees, and all persons acting on its or their behalf (collectively, “VPG”), disclaim any and all liability for any errors, inaccuracies or incompleteness contained herein or in any other disclosure relating to any product.

The product specifications do not expand or otherwise modify VPG’s terms and conditions of purchase, including but not limited to, the warranty expressed therein.

VPG makes no warranty, representation or guarantee other than as set forth in the terms and conditions of purchase. **To the maximum extent permitted by applicable law, VPG disclaims (i) any and all liability arising out of the application or use of any product, (ii) any and all liability, including without limitation special, consequential or incidental damages, and (iii) any and all implied warranties, including warranties of fitness for particular purpose, non-infringement and merchantability.**

Information provided in datasheets and/or specifications may vary from actual results in different applications and performance may vary over time. Statements regarding the suitability of products for certain types of applications are based on VPG’s knowledge of typical requirements that are often placed on VPG products. It is the customer’s responsibility to validate that a particular product with the properties described in the product specification is suitable for use in a particular application. You should ensure you have the current version of the relevant information by contacting VPG prior to performing installation or use of the product, such as on our website at vpgsensors.com.

No license, express, implied, or otherwise, to any intellectual property rights is granted by this document, or by any conduct of VPG.

The products shown herein are not designed for use in life-saving or life-sustaining applications unless otherwise expressly indicated. Customers using or selling VPG products not expressly indicated for use in such applications do so entirely at their own risk and agree to fully indemnify VPG for any damages arising or resulting from such use or sale. Please contact authorized VPG personnel to obtain written terms and conditions regarding products designed for such applications.

Product names and markings noted herein may be trademarks of their respective owners.

Table of Contents

USR-SF Series — New Stress-Free Ultra Stable Primary Standard Resistor 2
ASR Series — Primary Standard Resistor 3
CSR Series — Working Standard Resistor 4
LSR Series — High Power Standard Resistor 5
MSR Series — Milliohm Meter Calibration Resistor 6
ATV Series — I/V Converter 7
ADR Series — Precision Programmable Resistance Box/RTD Simulator 8
ADR Series — 6-Dial Decade Resistance Box/RTD Simulator 9
ADR-1000 Series — 1-Dial Resistance Box/RTD Simulator 10
ATS Series — Resistance Transfer Standard 11
Custom Products 12
Traceability Chart 14
Calibration 15
Global Contact Map 16
About VPG Foil Resistors

Alpha Electronics
A VPG Brand

New Stress-Free Ultra Stable Primary Standard Resistor

FEATURES

- Utilizing New Generation Stress Free Bulk Metal® Foil technology
- Long-term stability: 0.5 ppm/yr (0.2 ppm/yr typical)
- Temperature coefficient: less than ±0.05 ppm/°C at 23°C ±5°C
- Excellent humidity coefficient of resistance less than 0.1 ppm/% RH
- Excellent pressure coefficient of resistance less than 0.001 ppm/hPa
- Available wide range of resistance values at 1Ω, 10Ω, 25Ω, 100Ω, 1KΩ, 10KΩ

Incorporated the technology of
The National Institute of
Advanced Industrial Science and Technology
(The Japanese patent number 2010-114994)

MASS

Approx. 2.5 kg (5.5 lbs)

DESCRIPTION

The USR-SF series is an ultra stable primary standard resistor which is an enhanced version of the USR/ASR series through the use of Bulk Metal® Foil technology.

The ultra stable resistive element utilizes new generation stress-free Bulk Metal Foil technology developed by Alpha Electronics with 37 years experience and is based on using proprietary Nickel Chrome alloy. This results in extremely low temperature coefficients as ±0.05 ppm/°C at 23°C ±5°C. This performance is unique to Alpha Electronics throughout the world.

The stress-free resistance element eliminates stress factors using a special treatment process and is encapsulated in a specially-designed ceramic case to protect against humidity and oxidation. Thus, less than 0.5 ppm/year (0.2 ppm/year typical) is realized.

Alpha's Bulk Metal Foil construction provides excellent AC characteristics—superior to performance of conventional wirewound standard resistors.

The USR-SF, with its extreme long-term stability and low TCR, can be used in air which reduces cost and operation for maintenance of oil bath.

CONFIGURATION in millimeters

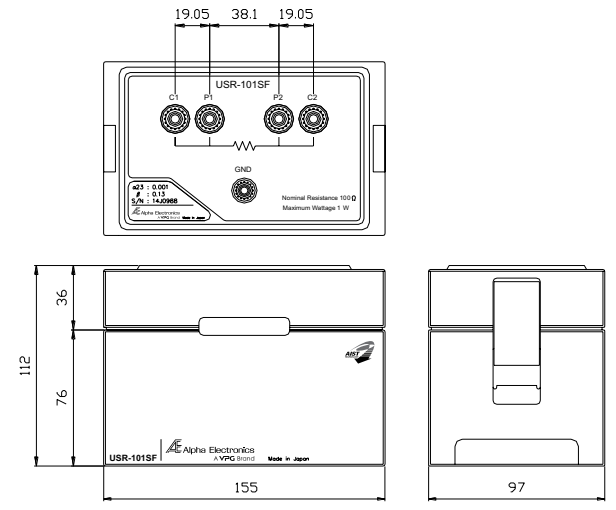

The resistive elements are held by special designed case so, it's suitable for environment with vibration during transportation.

SPECIFICATIONS

Series	Nominal Value	Accuracy	Uncertainty of Calibration	Temp. Coefficient	Temp. Retrace	Stability	Power Rating	Power Coefficient	Operating Temp. Range	Storage Temp. Range	Number of Terminals
		ppm	ppm	ppm/°C	ppm	ppm/yr	W	ppm/power*	°C	°C	
USR-1R0SF	1Ω	±2	±2.5 @ 23°C	±0.05 @23±5°C	±0.5 @23±5°C	±0.5 (±0.2 actual)	1.0	±1	18–28	0–50	5
USR-100SF	10Ω										
USR-250SF	25Ω										
USR-101SF	100Ω										
USR-102SF	1 kΩ										
USR-103SF	10 kΩ										

* Rated power will be different per future additional low values.

For any questions, contact
sales-alpha@alpha-elec.co.jp
Document No.: 67048
Revision: 17-Apr-2015

Primary Standard Resistor

FEATURES

- Excellent long-term stability of resistance, less than 3 ppm/year
- Low temperature coefficient, less than 0.2 ppm/°C
- The resistance value may be specified from 1Ω to 10 MΩ
- Excellent AC characteristics due to non-wirewound technology
- Compact and sturdy construction designed for easy operation and storage
- Certificate of Calibration and Inspection sheets traceable to NMIJ* are provided at shipment.
  *NMIJ: National Metrology Institute of Japan

MASS

Approx. 2.5 kg (5.5 lbs)

DESCRIPTION

The ASR series is an extremely stable standard resistor. Alpha's Ni/Cr alloy Bulk Metal® Foil technology is used as the resistive element, providing high stability and low temperature coefficient. The process of building a standard resistor requires significant experience and a great degree of skill. Due to our long-term experience in developing and enhancing ultra stable Bulk Metal® Foil technology, we are able to provide products with consistency of performance under strict quality control.

With the extreme stability of this resistor relative to temperature change, the ASR can be used in air without oil bath or critical environmental temperature control eliminating added expense and maintenance problems.

The ASR is designed to be used in a broad range of environments—from a production floor for making precise measurements, to a corporate traceability system as a calibration and reference standard.

The resistors are mounted in a compact sturdy box with cover whose construction is designed to protect the resistor and terminals from any damages.

CONFIGURATION in millimeters

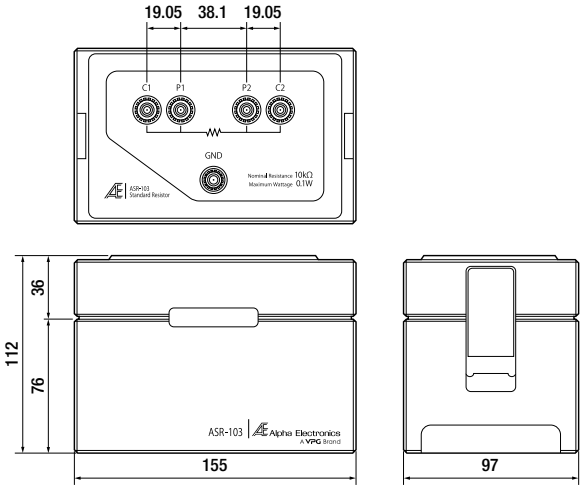

SPECIFICATIONS

Series	Nominal Value	Accuracy	Uncertainty of Calibration	Temp. Coefficient	Temp. Retrace	Stability	Power Rating	Power Coefficient	Max. Working Temp.	Max. Working Current	Max. Working Voltage	Operating Temp. Range	Storage Temp. Range	Number of Terminals
		ppm	ppm	ppm/°C	ppm	ppm/yr	W	ppm/power*	°C	mA	V	°C	°C	
ASR-1R0	1Ω	±5	±2.5 @ 23°C	±0.2 @ 0~23°C 23~50°C	±2 @ 23~0°C ~23°C 23~50°C ~23°C	±3	0.5	±5	50	707	0.70	0~50	–10~60	5
ASR-100	10Ω						0.1	±1		100	1.00			
ASR-101	100Ω									31.6	3.16			
ASR-102	1kΩ									10.0	10.0			
ASR-103	10kΩ									3.16	31.6			
ASR-104	100kΩ									1.00	100			3
ASR-105	1MΩ									0.31	316			
ASR-106	10MΩ	±10	±5	±0.5		±6		±3		0.10	1000			

* Power=Power rating

Alpha Electronics
A VPG Brand

Working Standard Resistor

FEATURES

- Usable in air without oil bath
- Wide resistance range available from 1 mΩ to 100 MΩ
- Excellent performance versus cost
- Terminals aligned in a single row for easier wiring and placement
- Certificate of Calibration and Inspection sheets traceable to NMIJ* are provided at shipment.
  *NMIJ: National Metrology Institute of Japan

MASS

Approx. 300g (0.66 lbs)

DESCRIPTION

The CSR series has Bulk Metal® Foil resistance elements, which have the same excellent stability and low temperature coefficient of resistance as the ASR series—a precision level that cannot be provided by any other resistance material. In addition, the CSR is designed for equal ease of use in the laboratory or on the production floor. It's construction is designed to give priority for portability and workability, being used in air without an oil bath.

CUSTOMIZED SPECIFICATIONS

Available for any customized resistance value.
Contact to our sales department for more details.

CONFIGURATION in millimeters

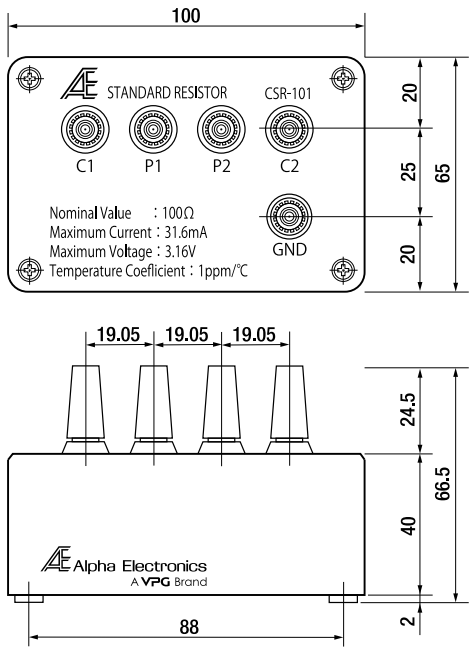

SPECIFICATIONS

Series	Nominal value	Accuracy	Temp. Coefficient	Stability	Power Rating	Power Coefficient	Storage Temp. Range	Max. Working Current	Max. Working Voltage	Working Temp. Range	Number of Terminals
		ppm	ppm/°C	ppm/year	W	ppm/mW	°C	A	V	°C	
CSR-1N0	1 mΩ	±100	±10	±20	0.5	±0.05	0~50	22.3	0.02	18~28	5
CSR-10N	10 mΩ	±50	±5	±15				7.07	0.07		
CSR-R10	100 mΩ	±25	±2.5	±10				2.23	0.22		
CSR-1R0	1Ω	±5	±1	±5	0.1	±0.01		0.31	0.31		
CSR-100	10Ω							0.10	1.00		
CSR-101	100Ω							0.03	3.16		
CSR-102	1 kΩ							0.01	10.0		
CSR-103	10 kΩ							0.003	31.6		
CSR-104	100 kΩ							0.001	100		3
CSR-105	1 MΩ							0.0003	316		
CSR-106	10 MΩ	±10		±10	0.1			0.0001	1000		
CSR-107	100 MΩ	±25	±5	±25	0.01			0.00001	1000		

For any questions, contact
sales-alpha@alpha-elec.co.jp
Document No.: 67023
Revision: 30-Mar-2015

High Power Standard Resistor

FEATURES

- For high power measurement
- Excellent long-term stability
- Compact size. Usable in air. Low temperature coefficient for small resistance values
- Temperature efficient design to control self-heating
- Certificate of Calibration and Inspection sheets traceable to NMIJ* are provided at shipment.
  *NMIJ: National Metrology Institute of Japan

MASS

Approx. 600g (1.3 lbs)

DESCRIPTION

The LSR series is developed to meet the requirements of high current / low resistance applications. Bulk Metal® Foil resistive elements are used to ensure the best long-term stability and lowest temperature coefficient is achieved.

The enclosure is made of perforated aluminum to allow effective temperature dissipation, especially under conditions of high electrical power.

The LSR can be used in air without oil bath or cooling unit, it is suitable for a wide range of applications, such as high precision measurements, calibration in corporate metrology labs, and a reference for precision power supplies, etc.

HIGH CURRENT OPTION

Ability to change terminal knobs for measuring the power up to 4W (63A) for 1 mΩ type (see the picture). Add P to the end of model number, when ordering.

Type: LSR-1N0P
The spacing between voltage terminals is 19.05 mm.

High Current Option

CONFIGURATION in millimeters

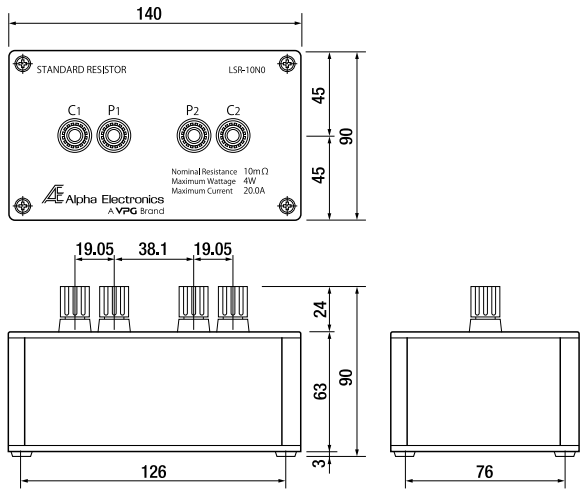

SPECIFICATIONS

Series	Nominal Value	Accuracy	Temp. Coefficient	Stability	Power Rating	Power Coefficient	Storage Temp. Range	Max. Working Current	Max. Working Voltage	Working Temp. Range	Number of Terminals
		ppm	ppm/°C	ppm	W	ppm/mW	°C	A	mV	°C	
LSR-1N0	1 mΩ	±100	±2.5	±20	1	±0.025	0~50	31.6	31.6	18~28	4
LSR-10N	10 mΩ	±50		±10	4			20.0	200		
LSR-R10	100 mΩ	±25						6.32	632		

Alpha Electronics
A VPG Brand

Milliohm Meter Calibration Resistor

FEATURES

- Compact, lightweight, portable and easy to operate
- Excellent performance versus cost
- Resistive pattern designed to minimize difference performance between AC and DC
- Certificate of Calibration and Inspection sheets traceable to NMIJ* are provided only for DC operation at shipment
  *NMIJ: National Metrology Institute of Japan

MASS AND SIZE

- Mass: 150g (0.33 lbs)
- Size: 50 D × 44 H × 65 W mm

CUSTOMIZED SPECIFICATIONS

Available for any customized resistance value.
Contact to our sales for more details.

DESCRIPTION

The MSR series is a standard resistor whose internal construction and terminals are designed to optimize AC characteristics and minimize the effect of thermo-electromotive force, respectively. The MSR is a compact suitable standard resistor for daily calibration of milliohm meters, etc. Although the MSR series is a low cost, easy to use product, it offers both high stability and low temperature coefficient. The MSR is most suitable as a standard resistor to be used on the job site.

SPECIFICATIONS

Series	Nominal Value	Accuracy	Temp. Coefficient	AC Characteristics 1kHz (Ref. Value)	Stability	Power Rating	Max. Working Temp.	Max. Working Current	Max. Working Voltage	Working Temp. Range
		ppm	ppm/°C	%	ppm	W	°C	A	mV	°C
MSR-1N0	1 mΩ	500	±15	±0.3	±25	0.1	50	10.0	10.0	0~50
MSR-10N	10 mΩ	200	±10	±0.1				3.16	31.6	
MSR-R10	100 mΩ		±5					1.00	100	

I/V Converter

FEATURES

- Lightweight, compact size
- Full resistance range available from 1Ω to 100 kΩ

DESCRIPTION

The ATV series is a current / voltage conversion adaptor to measure a current by using a voltage meter.

It is small, lightweight, and attached directly to a voltage meter for ease of operation.

SPECIFICATIONS

Series	Nominal Value	Accuracy	Temperature Coefficient	Max.Working Current	Power Rating
		%	ppm/°C	mA	W
ATV-1R0	1Ω	±0.1	±2.5	500	0.25
ATV-100	10Ω			100	0.1
ATV-101	100Ω			31.6	
ATV-102	1 kΩ			10.0	
ATV-103	10 kΩ			3.16	
ATV-104	100 kΩ			1.00	

Alpha Electronics
A VPG Brand

Precision Programmable Resistance Box

RTD Simulator

FEATURES

- Controllable by PC with GB-IB and RS232C interfaces
- Compact design
- Utilizing ultra precision Bulk Metal® Foil resistor
- Quick response capable of setting desired resistance in as fast as 100 ms
- Accuracy ≤0.01% +2 mΩ in 6½ digit readings
- Temperature coefficient of resistance ≤5 ppm/°C (>100Ω)
- Double electrical shielding protection against noise
- Interface specification open to users

MASS

Approx. 5 kg (11 lbs)

DESCRIPTION

The ADR Digital box is easy to set to any desired resistance value using a PC. The ADR Digital box realizes automated inspection to minimize inspection time while avoiding human error. The ADR Digital is the most efficient product for simulating input resistance values, and panel keys allow local-mode resistance value input. The JIS C1604/IEC60751 Pt thermometer table is stored in memory to facilitate entry of specific temperatures for specific resistance values in the Pt standard table.

Utilizing ultra precision Bulk Metal® Foil technology with very low Resistance Temperature Characteristics and excellent long-term stability assures high accuracy and high stability.

AVAILABLE PT STD OF TEMP INPUT					
IEC60751	Pt100	Pt200	Pt300	Pt500	Pt1000

CONFIGURATION in millimeters

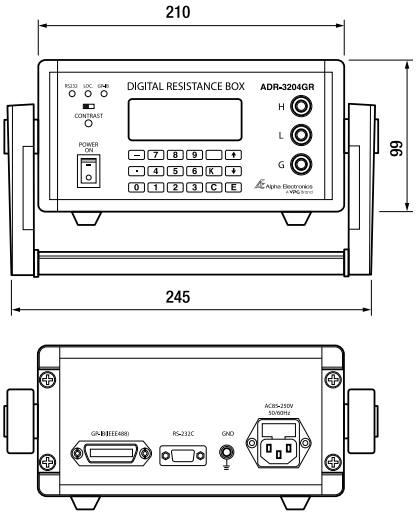

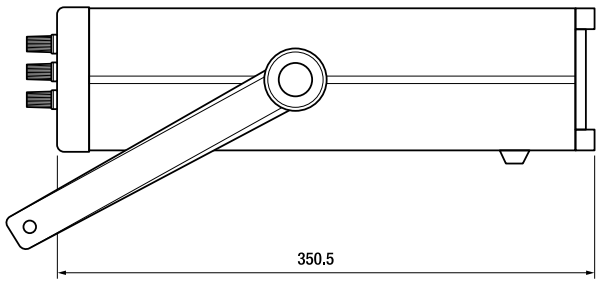

SPECIFICATIONS

Model	Min. Resistance Value	Max. Resistance Value	Resolution (Ω)	Accuracy	Max. Wattage
ADR-3204GR	5.000Ω	1.999999 kΩ	0.001	±(0.01% +2 mΩ)	0.5W
	2.00 kΩ	19.99999 kΩ	0.01		
	20.0 kΩ	199.9999 kΩ	0.1		

For any questions, contact
sales-alpha@alpha-elec.co.jp
Document No.: 67027
Revision: 27-Jun-2017

6-Dial Decade Resistance Box

RTD Simulator

FEATURES

- Accuracy ≤0.005% +2 mΩ
- Temperature coefficient of resistance ≤ 5 ppm/°C
- Long-term stability in resistance ≤50 ppm/year (storage life)
- Low contact resistance switch and three clip-typed contacts in parallel
- Low thermal EMF terminal
- Double electrical shielding protective against noise
- Utilizing Bulk Metal® Foil ultra precision resistance inside

MASS

Approx. 4.5 kg (10 lbs)

DESCRIPTION

The ultra precision resistors, the rotary switches, the output terminals and the double shielded construction are all features of the 6-Dial Decade Resistance Box with 6½ digit readings.

Resistors used in the 6-Dial Decade Resistance Box are ultra precision Bulk Metal® Foil resistors manufactured by Alpha Electronics Corp., assuring high stability over time and environment change. Rotary switches have very low contact resistance as three clip-typed contacts are connected in parallel. The three contacts assure higher mechanical reliability mechanically. Output terminals have very low thermal EMF, using rectangular wires of low thermal resistance material in a well-designed circuit configuration. Double shielded construction inhibits interference of environmental noise.

CONFIGURATION in millimeters

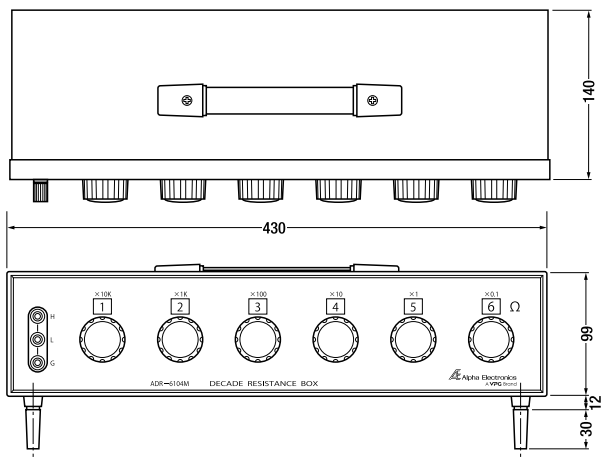

SPECIFICATIONS

Series	Min. Resistance Value	Max. Resistance Value	Resolu-tion	Dial Resistance Value/Step (Ω)						Accuracy	Max. Wattage
				Dial 1	Dial 2	Dial 3	Dial 4	Dial 5	Dial 6		
ADR-6102M	0.100Ω	1.111210 kΩ	0.001	100	10	1	0.1	0.01	0.001	±(0.005% ±2 mΩ)	0.5W
ADR-6103M	0.10Ω	11.11110 kΩ	0.01	1k	100	10	1	0.1	0.01		
ADR-6104M	0.1Ω	111.1110 kΩ	0.1	10k	1k	100	10	1	0.1		
ADR-6105M	1Ω	1.111110 MΩ	1	100k	10k	1k	100	10	1		
ADR-6106M	10Ω	11.11110 MΩ	10	1M	100k	10k	1k	100	10	<1 MΩ ±(0.01% +50 mΩ) ≥1 MΩ ±0.1%	0.5W

Alpha Electronics
A VPG Brand

1-Dial Resistance Box

RTD Simulator

FEATURES

- Up to 5-digit resistance values on switching contacts may be specified
- Improved work efficiency and elimination of careless mistakes
- Lightweight, compact size
- High precision, high stability

MASS

Approx. 1 kg (2.2 lbs)

TERMINALS AND CONTACTS

- Contacts: Max. 24
- Terminals: 2 to 5

DESCRIPTION

The ADR-1000 series is a standard resistor which is ideally suited for repetitive daily work, the resistance is easily switched from one value to another. This greatly improves work efficiency and helps to avoid careless mistakes, as compared with using a decade standard resistor (6-dial type).

Also suitable as RTD simulator for Pt related products and conductive meters.

The resistance elements utilize Bulk Metal® Foil technology and the connections to a rotary switch are made by using 4-terminal junctions. This ensures that high precision, high stability and low temperature coefficient are achieved.

PRODUCT MODEL NUMBER

ADR - *1xxx

*1xxx is our internal code which is determined at order receipt

CONFIGURATION in millimeters

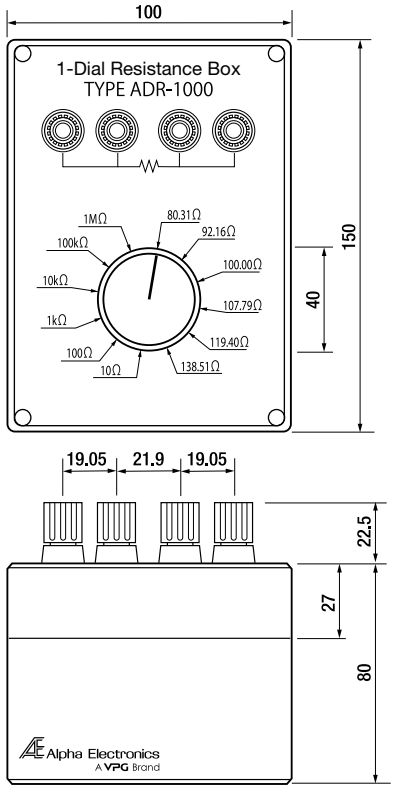

NOMINAL VALUE, TOLERANCE, TEMPERATURE COEFFICIENT

Resistance Value Range (Ω)	Tolerance (%)	Temperature Coefficient (ppm/°C)
1~1M	±0.02 ±0.05 ±0.1	0±2.5 0±5

Tolerance and temperature coefficient varies with resistance values.
For detailed specifications, contact our sales office.

For any questions, contact
sales-alpha@alpha-elec.co.jp
Document No.: 67029
Revision: 15-Apr-2015

Resistance Transfer Standard

FEATURES

- Using Bulk Metal® Foil as a resistive element
- Usable in air without oil bath due to superior temperature coefficient
- Very tight matching accuracy
- Excellent long-term stability and usable as a standard resistor

MASS AND SIZE

- Weight: Approx. 3 kg (6.67 lbs)
- Size: 180 D × 70 H × 332 W mm

OPTIONS

- ATS-LC Lead Compensator
- ATS-SB Shorting Bar

DESCRIPTION

The ATS series is a resistance transfer standard to calibrate working standard resistors by using a primary standard.

The ATS consists of the same 10 nominal value resistors connected in series known as Haymon bridge construction.

A maximum resistance ratio if 1:100 is obtainable in high precision, using either a lead compensator or a shorting bar. Configurations consist of from “10 resistors connected in parallel (1/10R)” to “10 resistors connected in series (10R)”.

The ATS uses Bulk Metal® Foil technology as a resistive element, ensuring very tight matching accuracy.

The ATS can be used as a standard resistor due to the special features of Bulk Metal® Foil technology (low temperature coefficient and high stability).

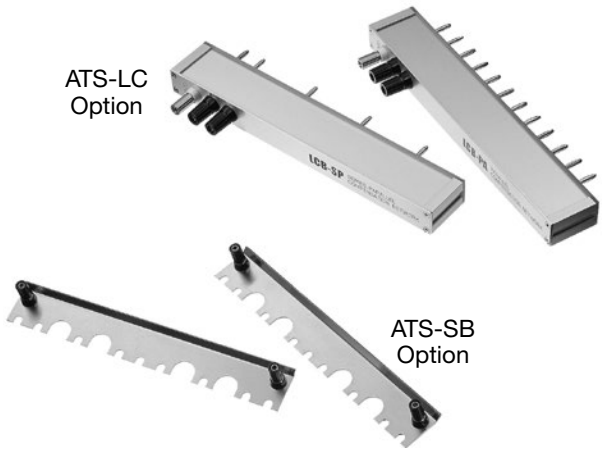

SPECIFICATIONS

Series	Rsistance Range	Step	Accuracy		Temperature Coefficient		Stability	Power Rating	Power Coefficiency	Working Temperature Range	Terminal Junctions
			Absolute	Matching	Absolute	Tracking					
	Ω	Ω/step	ppm	ppm	ppm/ °C	ppm/ °C	ppm/yr	mW	ppm/mW	°C	
ATS-1E1	1~100	10	±20	±5	±5	±2.5	±10	10/ element 100/unit	±0.1/ element	23 ±10	4 terminals
ATS-1E2	10~1k	100	±10		±1	±1					
ATS-1E3	100~10k	1k									
ATS-1E4	1k~100k	10k									
ATS-1E5	10k~1M	100k									
ATS-1E6	100k~10M	1M					±50				2 terminals
ATS-1E7	1M~100M	10M	±50	±10	±10	±5					

Products for Standard Resistors

ADR-7102KS
Dial Resistor with following functions

- 5-Dial, ultra low resistance (0Ω~111 mΩ, 0.01Ω~1 mΩ/step)
- 5-Dial variable shunt resistor (30A)
- 7-Dial variable shunt resistor (100 mΩ~11.111 mΩ, 1 mΩ/step)

ADS SERIES
National Standard Laboratory Level AC Shunt Standard Resistor

- Maxum ±5 ppm difference between AC operations @ 10 kHz and DC operations
  (Joint development with JEMIC: Japan Electric Meter Inspection Corp.)

AVR SERIES
DC Voltage Divider

- DC voltage divider which calibrates low range of a digital voltage meter
- Divide 50V by 1/1000 or 1/100 in ±0.001% accuracy

ATB SERIES

- Various custom resistance boxes
- Resistance box to calibrate ohm meters
- Linearity checker for resistance temperature meters
- Available any resistance value, specification

Products for Standard Resistors

APS SERIES
High Power Shunt Resistor

- Available for any current and resistance value
- Usable in air without any cooling system
- Max. working current available up to 1000A)

TYPE PZ
AC Coaxial Shunt Resistor

- Coaxial construction for frequency characteristics
- Case has built-in heat sink for heat radiation

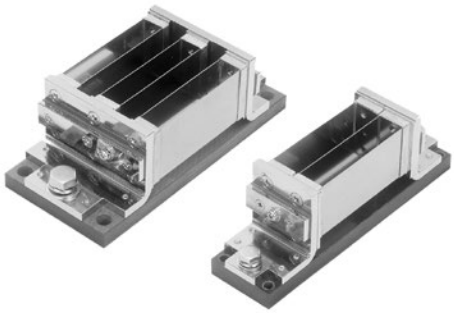

TYPE PKA, PKB
High Accuracy, High Power Shunt Resistor

- Shunt resistor with superior temperature coefficient
- Very low drift under high power usage

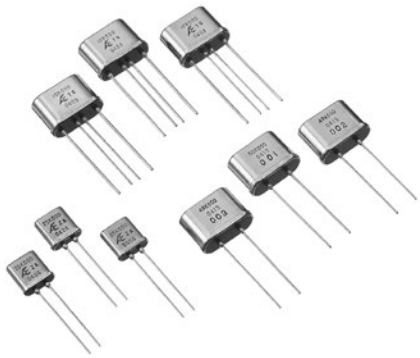

TYPE HC, HD, HG
Resistive Element

- Ultra precision/stable Bulk Metal® Foil hermetically sealed resistor
  * Calibration for resistance element is not available

Traceability Chart

Alpha Electronics
A VPG Brand

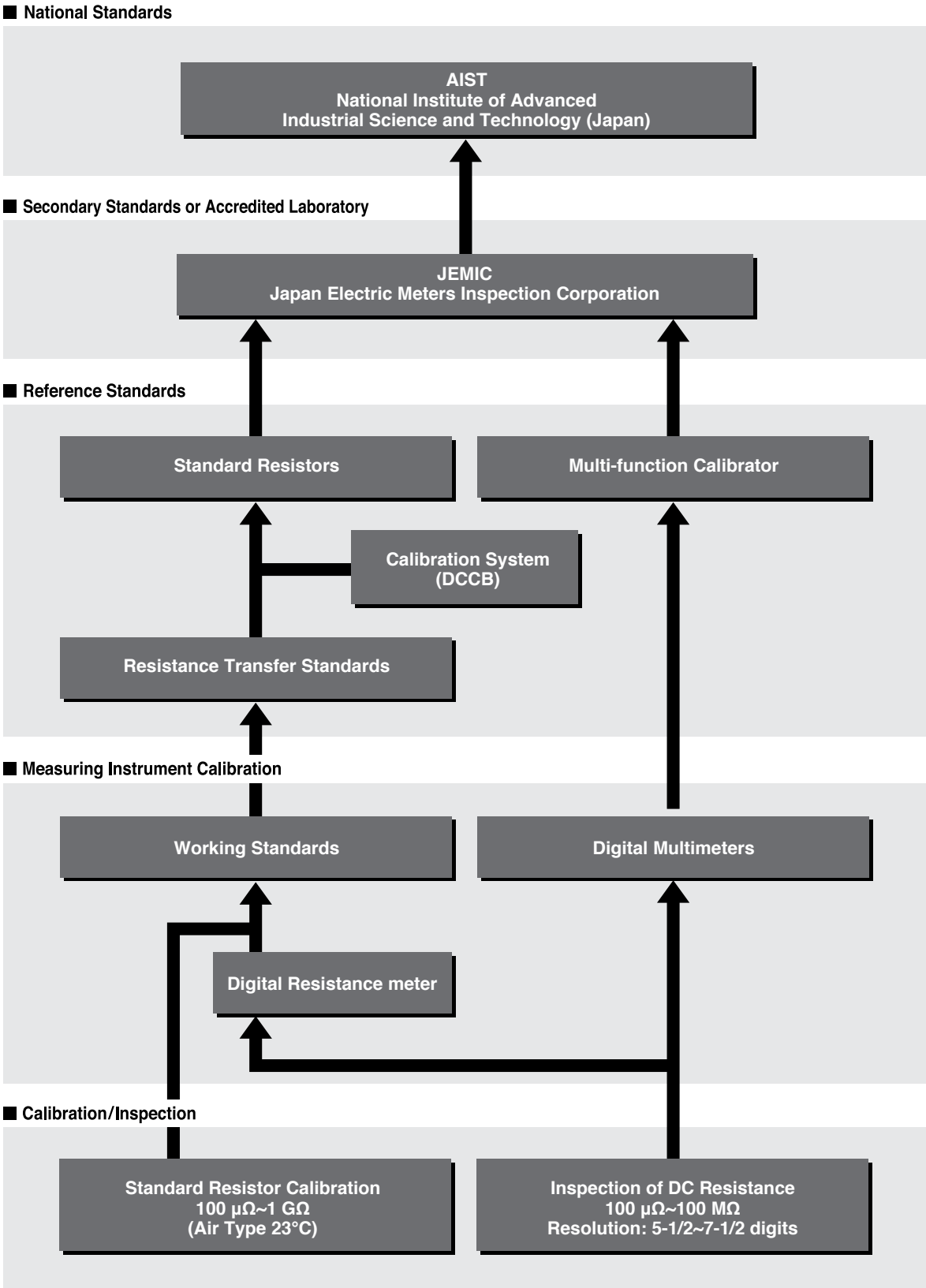

Calibration/Calibration Room/Options

CALIBRATION

- Traceability chart
- Certificate of calibration
- Inspection sheet

CALIBRATION LABORATORY

OPTIONS

TYPE AND APPLICATIONS

Item	Type	Applications
Carrying Case	CC-2000	Two ASR's
	CC-3200GR	ADR Digital type
	CC-6100	ADR 6-Dial type
	CC-8000	Eight CSR's
Rack Mount Adapter	AM-3200	ADR Digital type
	AM-6100	ADR 6-Dial type

CC-8000

CC-6100

Alpha Electronics
A VPG Brand

Product and Contact Information

PRODUCT LISTING

Bulk Metal® Foil Ultra Precision Resistors
Precision Thin Film Resistors
Thermosensitive Resistors
Standard Resistors

CONTACT US

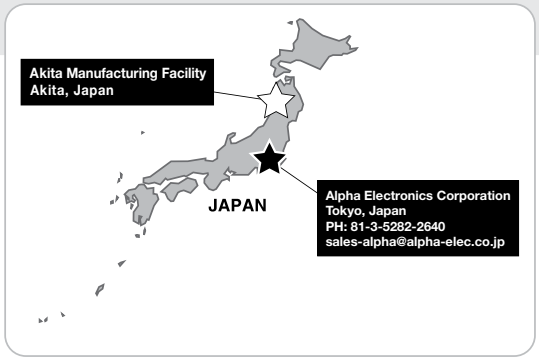

Sales Office
Manufacturing Facility

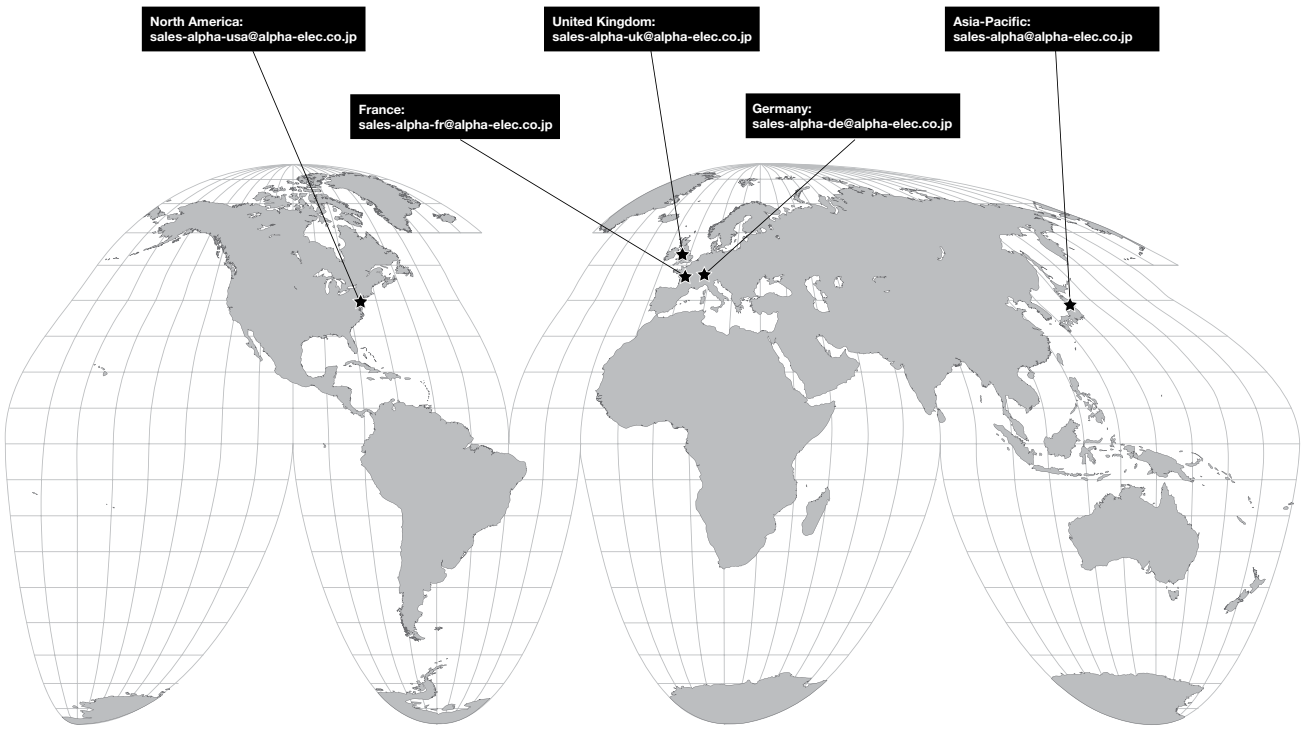

VPG Foil Resistors

Vishay Foil Resistors • Alpha Electronics • Powertron

VPG Foil Resistors stands for unparalleled precision, stability and reliability. Our resistor portfolio encompasses a wide variety of configurations and packages designed to surpass the requirements of even the most demanding applications.

Represented by the premier brands Vishay Foil Resistors, Alpha Electronics, and Powertron, our unique Bulk Metal® Foil technology outperforms all other resistor technologies. Continously refined since its introduction in 1962, this ultra-precision technology is the solution of choice due to a distinct technical advantage over other options — the ability to deliver a completely customizable solution for any application.

To complement our extensive portfolio of high-performance foil resistors, we also offer decade boxes, standard resistors, exceptional precision thin film and power resistors including special construction configurations to meet the requirements of high temperature applications.

Portfolio Performance Highlights

- Extremely low TCR: 0.2 ppm/°C typical
- TCR tracking available to 0.1 ppm/°C
- Excellent load-life stability/ratio stability: ±0.002% max ΔR per MIL standard; ultra long term stability: <1 ppm/year
- Very low resistance values from 0.0005 Ω
- Any 6-digit value in the resistance range available at no additional cost with any tolerance (to 0.001%)
- High power up to 2500 W
- Shelf life: 2 ppm over more than six years
- Rapid thermal stabilization: <1 s
- Thermal EMF: 0.05 μV/°C
- Electrostatic discharge (ESD): to at least 25 kV
- Non-inductive: < 0.08 μH
- Certification to NIST standards
- Special design to meet high temperature application requirements up to +240°C ambient temperature

About Our Brands

Vishay Foil Resistors Bulk Metal® Foil resistors provide extremely low temperature coefficient of resistance (TCR) and exceptional long-term stability through temperature extremes. The Vishay Foil Resistors portfolio includes discrete resistors and resistor networks in surface-mount and through-hole (leaded) configurations, precision trimming potentiometers, and discrete chips for use in hybrid circuits, with customized chip resistor networks and arrays available. We continue to develop, manufacture and market new types of Bulk Metal Foil resistors, including military-established-reliability components (EEE-INST-002, DLA, CECC, ESA, ER, QPL, etc).

Alpha Electronics has been supplying ultra-precision Bulk Metal® Foil resistors to engineers from Japan with "Stability, Accuracy, and Reliability" since 1978. The resistance stability of Alpha foil resistor technology against changes in temperature and over time makes the devices excellent metrological standard resistors as well. Without needing the oil baths required by conventional standard resistors, they are a popular choice by national standard institutes and local calibration laboratories for primary and secondary standards. Alpha's standard resistors are available in a variety of models to fit a wide range of applications. Our ultra-precision thermosensitive resistor features a resistivity that varies linearly with temperature change, and is ideally designed for temperature detection and compensation applications with small size and rapid response.

Powertron is dedicated to the development, manufacturing and marketing of high-precision Bulk Metal® Foil, current sense and thick film resistors for use in diverse applications. Made in Germany, with local customer service and technical support, we offer a full complement of resistors for accurate, precise and high-power circuits (up to 2500 W), with full customization capabilities to support virtually any package type. We focus on delivering solutions with the best combination of power ratings, TCR and resistance ranges. As a result, our products are used throughout the world in high-precision medical, aerospace, military and industrial applications.

Contact us at foil@vpgsensors.com

vpgfoilresistors.com

VPG Foil Resistors

Vishay Foil Resistors • Alpha Electronics • Powertron

MS0257-1602

Alpha Electronics | Part of VPG Foil Resistors

Contact

sales-alpha@alpha-elec.co.jp

alpha-elec.co.jp

© Copyright 2017 Vishay Precision Group. ® Registered trademarks of Vishay Precision Group.
All rights reserved. Printed in Japan. Specifications subject to change without notice.

DB0111-1706-EN