Back to HOME

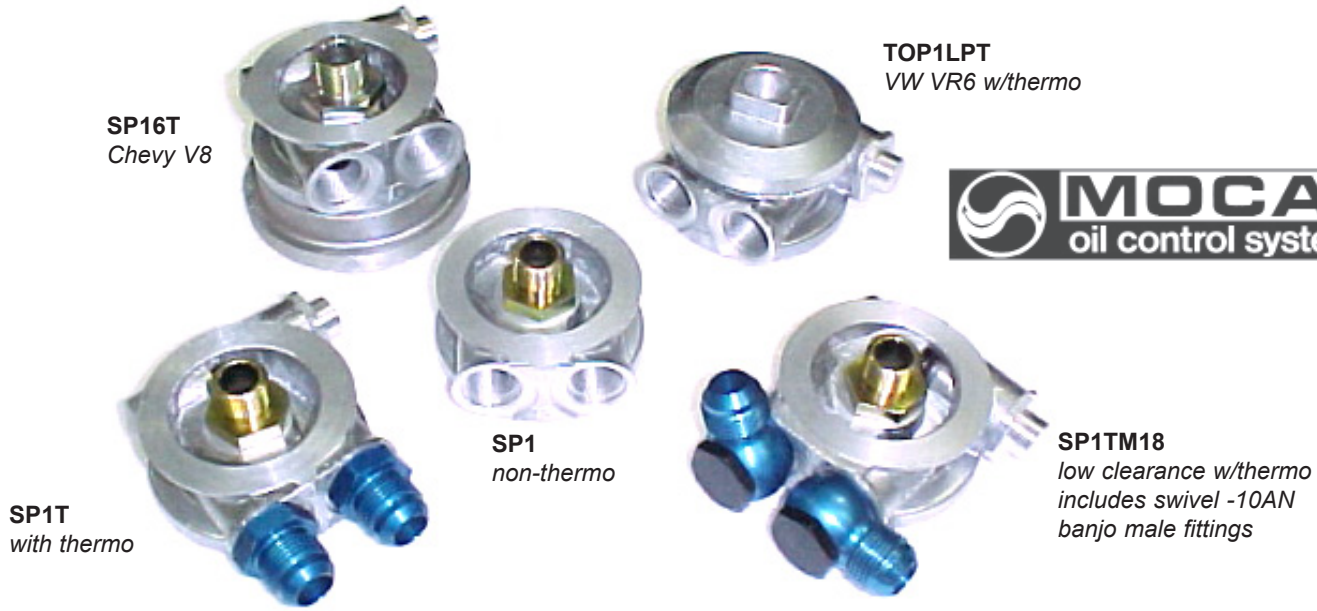


MOCAL USA

**MOCAL** manufactures the industries widest range of **Sandwich Plate Adaptors**. These devices are designed to be installed between the engine block and oil filter and easily allow engine oil to be circulated for remote oil cooler installations. We can supply sandwich adaptors in all popular oil filter thread configurations (3/4", 5/8", 13/16") SAE and (18mm, 20mm, 22mm) metric sizes for fitment to virtually all engine applications. Mocal Sandwich adaptors are optionally available with built in thermostat (180 degree) which accurately controls oil flow to the cooling device allowing for quick engine warm up plus oil system protection in cold climates. We have even designed special sandwich plate adaptors for unique engine applications like Chevrolet V8, Volkswagen VR6, and tight clearance installations (w/ rotating -10AN banjo oil in/out). Units are made from cast aluminum and are supplied with sealing o-rings and extension screw to match desired filter thread. Most inlet/outlet ports are M22 x 1.5 female thread to designed to receive male/male unions which are available separately.

**Standard Models**

| Part | Filter Thread Size | Price |
|---|---|---|
| SP1 | 3/4"-16 | $65.00 |
| SP1A | 5/8"-18 | $65.00 |
| SP1E | 5/8" UNF | $65.00 |
| SP1C* | 13/16"-16 | $65.00 |
| SP1D | 18mm | $65.00 |
| SP1F | 20mm | $65.00 |
| SP1G | 22mm | $100.00 |

**NOTE: Chevy SB & BB use SP16*

**Thermostatic Models**

| Part | Filter Thread Size | Price |
|---|---|---|
| SP1T | 3/4"-16 | $115.50 |
| SP1AT | 5/8"-18 | $115.50 |
| SP1CT* | 13/16" | $115.50 |
| SP1DT | 18mm | $115.50 |
| SP1FT | 20mm | $115.50 |
| SP1GT | 22mm | $150.00 |
| TOP1LPT | VW VR6 | $165.00 |
| SP1TM18 | Optional | $190.50 |

**NOTE: Chevy SB & BB use SP16T*

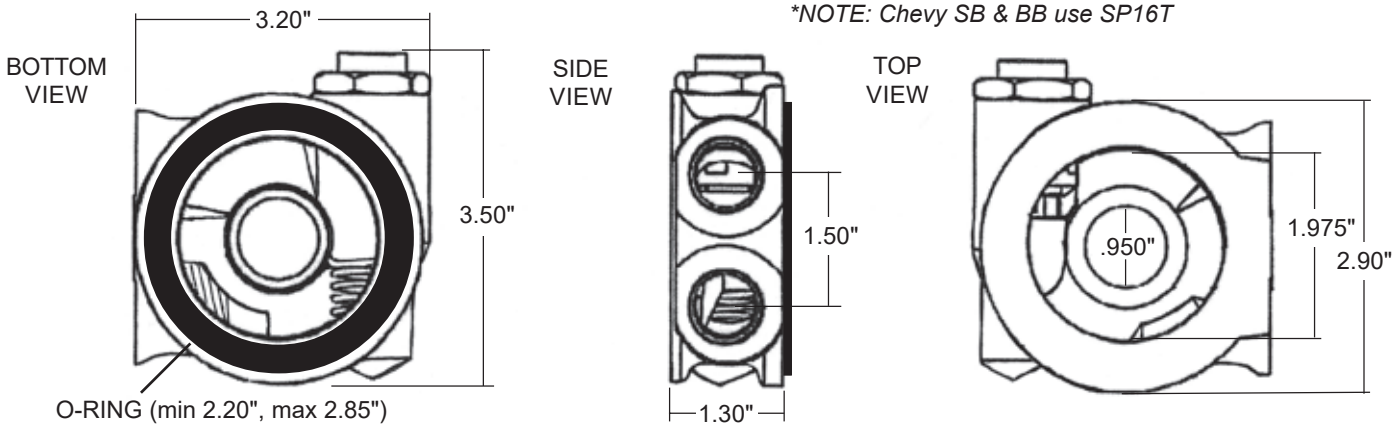


MOCAL USA

*Prices subject to change without notice.*

Back to HOME

## Mocal Sandwich Plate Kit with fluid connections

For 2022 our most popular oil cooler sandwich plates are now available with union/adapters for -AN fluid connections. We have added part numbers that include the union/adapter fittings for hose connection in either -8AN or -10AN as a kit, making it easier to purchase as everything is now included. Choose from either a 3/4"-16 or M20 x 1.5 version which covers 90% of vehicle applications. All are best quality component on the market from **MOCAL**, the originators of the thermostatic sandwich plate (35+ years and over a million units in service).

**MOCAL** sandwich plates install between the engine block and oil filter easily allowing engine oil to be circulated for oil cooler installations. **MOCAL** sandwich plates include a built-in thermostat (180º degree) which accurately controls oil flow to the cooling device allowing for quick engine warm up plus oil system protection in cold climates. Like original equipment quality automotive aluminum parts, **MOCAL** sandwich plates are pressure die cast using A360 aluminum (not cheap pot/ white metal). Units are supplied with M22 x -AN male fittings (-8AN or -10AN) sealing o-rings and extension screw (3/4"-16 or M20 -1.5) to match engine oil filter thread. Weight 0.82Lb. with fittings. Made in England.

---

**Thermostatic Sandwich Plate for 3/4"-16 filter**
**-8AN union/adapters supplied. SP1T-8 $125.50**

**Thermostatic Sandwich Plate for 3/4"-16 filter**
**-10AN union/adapters supplied. SP1T-10 $125.50**

**Thermostatic Sandwich Plate for M20 x 1.5 filter**
**-8AN union/adapters supplied. SP1FT-8 $125.50**

**Thermostatic Sandwich Plate for M20 x 1.5 filter**
**-10AN union/adapters supplied. SP1FT-10 $125.50**

---

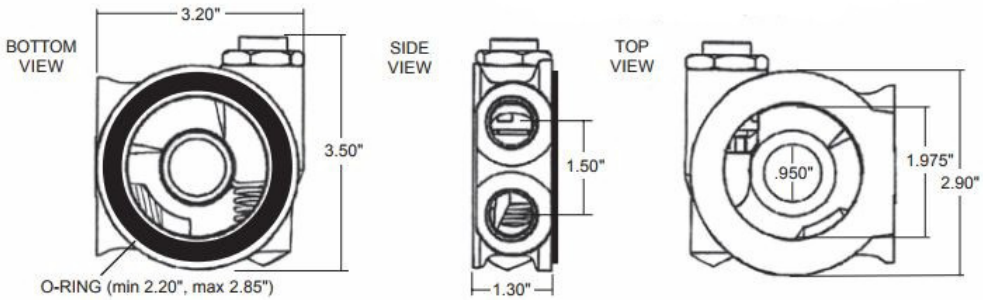


***BAT** inc.* 7630 Matoaka Road. Sarasota, FL 34243 ♦ phone (941) 355-0005 ♦ fax (941) 355-4683

*Prices subject to change without notice.*

## GM Engine Related Plates

All GM engines except Chevrolet small and big block utilize typical spin on type oil filters which depending on filter thread (see chart) can be fitted with our SP1 type sandwich plates. SBC and BBC type engines require our SP16 type sandwich plates that include a spacer to get the sandwich portion of the plate flush to the block surface. Modern LS series GM engines can be fitted with SP1 type sandwich plates (previous page), except in cases where the filter is made lower than the oil pan, possibly exposing the filter to road hazard damage. We also make a special thermostatic oil control take off for LS engines (A0TGM). This devise mounts to the side of the engine replacing the oil pressure sender assembly and leaves the stock filter undisturbed.

### *Chevy V8 Oil Sandwich Plate*

| description | part# | price |
|---|---|---|
| Sandwich Plate (non-thermo)<br>*13/16" filter thread* | SP16 | $85.00 |

*Works with typical Chevrolet small and big block engines. Unit retains stock type 13/16" thread oil filters, lowers filter by 1 1/2". Sandwich plate design rotates 360 degrees. Fluid connections are ORB type -10AN (7/8"-14) inlet/outlet ports, with 2x 1/8" NPT gauge or oil feed taps with plugs included.*

### *Chevy V8 Oil Sandwich Plate w/Thermo*

| description | part# | price |
|---|---|---|
| Sandwich Plate (thermostatic)<br>*13/16" filter thread* | SP16T | $189.50 |

*Revised for 2020; now one piece design. Works with typical Chevrolet small and big block engines. Sandwich plate design rotates 360 degrees; ORB type (22mm x 1.5) inlet/outlet ports available for -8AN, -10AN or -12AN.*

NEW

Note: Threaded adaptors are available in -AN, BSP & metric sizes for all components we offer.

### *GM LS Engine Oil Take-off Plate w/Thermo*

| application | port thread | part# | price |
|---|---|---|---|
| Chevy LS Engines | M22 x 1.5 | AOTGM | $190.00 |

*The Mocal thermostat incorporates a thermostatic control that automatically regulates oil flow to connected cooling devices and is the answer when installing oil cooling on high performance engines that see street/track use in varying climates and conditions. The thermo simply bolts in place of factory gauge sender and operates by bypassing oil until minimum temperature (200f) are met before sending full oil flow to the cooler(s). Units are threaded for M22 x 1.5 female oring boss fluid connections (included to -10AN) with provision for factory M12 x 1.5 sender; includes required hardware and oring/gaskets.*

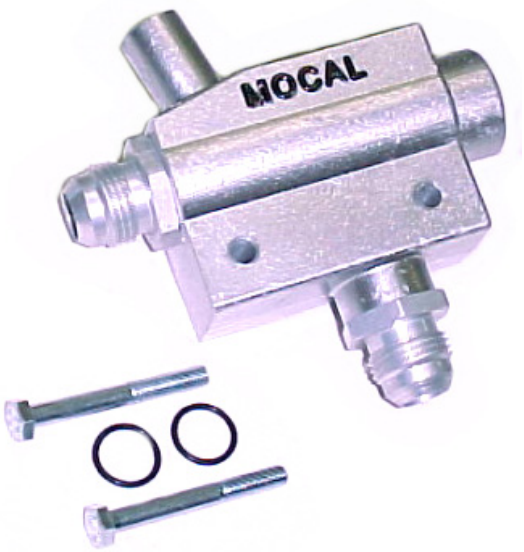


MOCAL USA

**BAT** *inc.* **7630 Matoaka Road. Sarasota, FL 34243 ♦ phone (941) 355-0005 ♦ fax (941) 355-4683**

*Prices subject to change without notice.*

## GM LS Engine Related (continued)

### *A0TGM Options*

Our GM LS type oil cooler take off with thermostat is tapped 22mm x 1.5 and can be fitted with one or two banjos in place of the straight union adaptors. This is particularly helpful in space limited installations. We have had a few customers, either using large tube headers or doing and engine swaps, that needed this configuration.

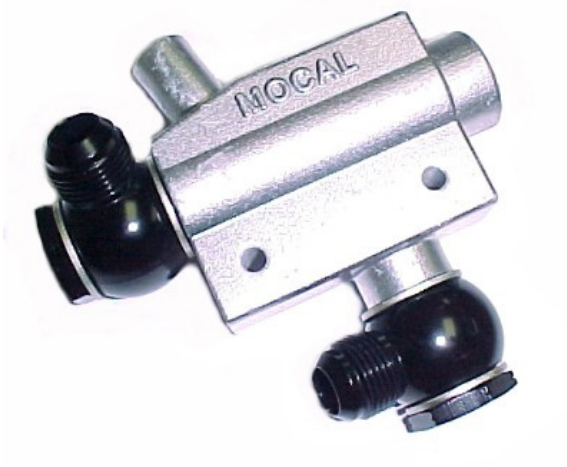


| description | part # | price |
|---|---|---|
| Banjo -10AN | BJ2210M | $25.50 |
| Banjo -8AN | BJ228M | $25.50 |
| Banjo Bolt M22 | BJBM22 | $12.95 |
| Seal/Washer* | DS-M22 | .90c |
| **2 required* | | |

### *GM LS Engine Oil Take-off Plate*

| application | port thread | part# | price |
|---|---|---|---|
| Chevy LS Engines | (-10 AN) | T0PLS | $99.00 |

*Bolt-on billet oil take off's plate replaces blank plate or gauge sender plate on LS type engines providing fluid connections for oil cooling. Threaded for 7/8"-14 (-10AN) o-ring boss type connections with provision for (2) 1/8" NPT sender or oil feed. Includes hardware & gasket. Fittings for fluid connection are sold separately. Suitable for 97 and later rear sump LS and Vortec Gen 3 & 4 engines. Not for front sump or LSX. Some aftermarket headers can make for a tight fit with hose connections.*

Threaded adaptors are available in -AN, BSP & metric sizes for all components we offer.

### *GM LS Engine Oil Take-off Plate w/Thermo*

| application | port thread | part# | price |
|---|---|---|---|
| Chevy LS Engines | M22 x 1.5 | T0PLS-T | $180.00 |

*Bolt-on billet oil take off's plate with incorporated 180° thermostat replaces blank plate or gauge sender plate on LS type engines providing fluid connections for oil cooling. Threaded for M22 x 1.5 o-ring boss type connections with provision for (2) 1/8" NPT sender or oil feed. Includes hardware & gasket. Fittings for fluid connection are sold separately. Suitable for 97 and later rear sump LS and Vortec Gen 3 & 4 engines. Not for front sump or LSX. Some aftermarket headers can make for a tight fit with hose connections.*

**BAT** *inc.* 7630 Matoaka Road. Sarasota, FL 34243 ♦ phone (941) 355-0005 ♦ fax (941) 355-4683

*Prices subject to change without notice.*

MOCAL USA

Back to HOME

## BRZ/FR-S/GT86 Thermostatic Sandwich Plate

Mocal is first to the market with our thermostatic oil cooler sandwich plate kit for new 2.0L Subaru (FA20) powered BRZ/FR-S/GT86 type cars. We have been working with tuners and race teams regarding the need for proper oil cooling on these engines and due to their high revving nature oil temps can reach levels that cause the engine management to reduce performance. Get the most from your standard or modified engine by adding a highly efficient Mocal or Setrab oil cooler and control oil flow with a genuine Mocal thermostatic sandwich plate. Built in thermostat (185 degree) accurately controls oil flow to the cooler allowing for quick engine warm up plus oil system protection in cold climates. Kit for 2.0L (FA20) engine includes: sandwich plate w/built in thermostat, interlocking 25mm spacer required for proper height/ clearance, lengthened 20mm x 1.5 filter extension, large section o-rings. Fluid connections are M22 ORB and available to either -8AN or -10AN.

| description | part# | price |
|---|---|---|
| Sandwich Plate | SP1T-FA20 | $189.50 |
| *FA20 engine 20mm oil filter thread* | | |
| Union M22 X -8AN (each) | M22AN08SE | $7.90 |
| Union M22 x -10AN (each) | M22AN10-SE | $7.90 |
| Sandwich Plate Kit | SP1T-FA20-A8 | $199.50 |
| *Includes (2) M22 x -8 Unions* | | |
| Sandwich Plate Kit | SP1T-FA20-A10 | $199.50 |
| *Includes (2) M22 x -10 Unions* | | |

*NOTE: For use with water to oil coolers, a non thermostatic version of this part is also available as part # SP1-FA20 ($120.00)*

## BRZ/FR-S/GT86 Plate w/Banjo Fittings

| description | part# | price |
|---|---|---|
| Sandwich Plate Kit *with -10AN Banjos* | SP1T-FA20-B10 | $245.00 |

*Some installations, especially ones with turbo kits on Subaru BRZ/FRS (FA20 engine) might require alternative sandwich options for additional clearance. We have developed this option with banjos fittings that can rotate independently for added versatility.*

Threaded adaptors are available in -AN, BSP & metric sizes for all components we offer.

**BAT** *inc.* **7630 Matoaka Road. Sarasota, FL 34243 ♦ phone (941) 355-0005 ♦ fax (941) 355-4683**

*Prices subject to change without notice.*

Back to HOME

# SP1THF Hi-Flow Thermostatic Sandwich Plate

## *Hi-Flow Thermostatic Sandwich Plate*

The new addition to the **MOCAL** Sandwich plate line is this "Hi-Flow" model. This unit is a recent development for a well known marine engine supplier, and designed to their specification. If any of the features or dimensions make it more desirable than the standard SP1T type plate, it can be used it as an alternative. The most notable feature of this new sandwich plate is its ability to use -16AN plumbing- thus the "High-Flow" designation. Overall it is physically 10% larger than our standard SP1T (internally and externally), uses a redesigned thermo-shuttle assembly, tapped for 22mm (inlet/outlet) ports, and is compatible with larger oil filters. For the price we supply SP1T-HF with your choice of extension screw (3/4", 13/16, 18mm or 20mm) and M22 x (-8AN, -10AN, -12AN or -16AN) unions.

**SP1T-HF shown with -16AN Fittings**

**Hi-Flow Sandwich Plate SP1T-HF $165.00**
*price includes (1) sandwich plate, (1) extension screw, (2) male/male unions*

**Extension Screw**

3/4-16"
13/16"
18mm
20mm

**Male x Male Unions**

M22 x -8AN
M22 x -10AN
M22 x -12AN
M22 x -16AN

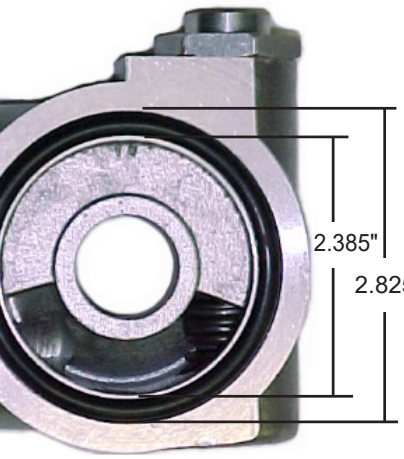


Port center to center & O-ring dimensions

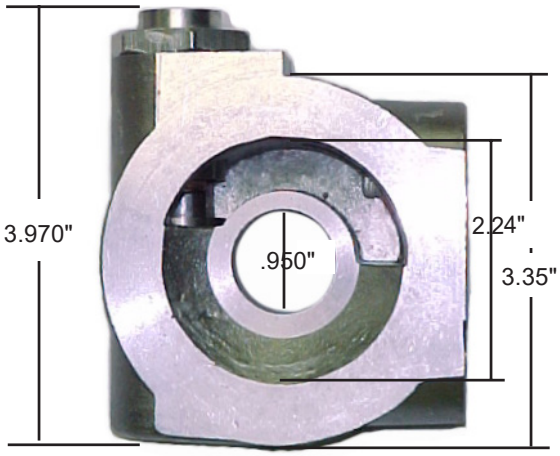


max. width, O-ring pad & center bore dimensions

Threaded adaptors are available in -AN, BSP & metric sizes for all components we offer.

***BAT** inc.* **7630 Matoaka Road. Sarasota, FL 34243 ♦ phone (941) 355-0005 ♦ fax (941) 355-4683**

*Prices subject to change without notice.*

Back to HOME

## SP2TC Billet Thermostatic Sandwich Plate

### *Diesel Thermostatic Sandwich Plate*

Our standard range of sandwich plates serve most engines with spin-on oil filters generally less than 3". This does not account for many diesel or industrial engine applications where the filter o-rings are in the 3.25" - 3.75" range. With this in mind we have developed a new large format version of our popular engine oil cooler sandwich plate. Our new SP2CT sandwich plate attaches simply to the engine between the oil filter mount and standard filter. It offers a integral 190º bypass type oil thermostat which allows for quick warm up even with large oil coolers in cold climates. The plate is tapped for M22 thread inlet/outlet ports which can support even the most generously sized -16AN hose fittings. Construction is billet aluminum which is strong whicl still being lightweight. All ports, fittings and flanges are o-ring sealed. There is also a 1/8" NPT port provided (w/plug) for adding a gauge, sensor or additional oil tap. The filter thread is 13/16"-16 which suits GMC Duramax diesel engines. We will be adding other filter options for future applications.

| | | |
|---|---|---|
| **Billet Thermo Sandwich Plate** | **SP2CT** | **$149.00** |
| *for 13/16"-16 oil filters* | | |
| **Fittings for Above (2) required:** | | |
| **Union M22 x -10AN** | **M22AN10-SE** | **$7.90** |
| **Union M22 x -12AN** | **M22AN12-SE** | **$7.90** |
| **Union M22 x -16AN** | **M22AN16-SE** | **$9.60** |

Threaded adaptors are available in -AN, BSP & metric sizes for all components we offer.

NEW

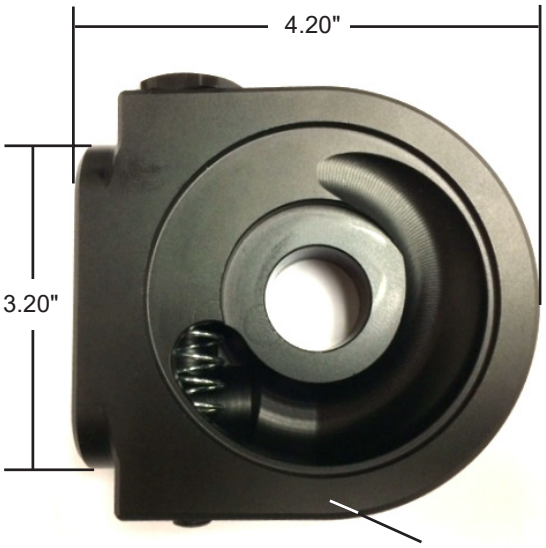

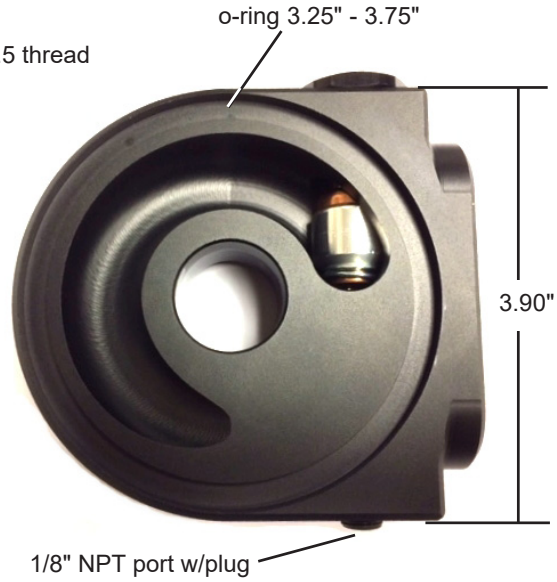


***BAT** inc.* **7630 Matoaka Road. Sarasota, FL 34243 ♦ phone (941) 355-0005 ♦ fax (941) 355-4683**

*Prices subject to change without notice.*

Back to HOME

## *Thermo Sandwich Plate Small & Big Block Chevy*

Introducing the ultimate thermostatic sandwich plate for small and big block Chevrolet V8's. Mocal's billet aluminum SP16T is a single piece unit with a built-in spacer for a reliable and robust seal against the unique recessed oil filter surface of the SBC and BBC engines. The sandwich plate is installed between the engine block and the oil filter allowing the user to plumb an oil cooler to any SBC or BBC engine and features a built-in 190°F (88°C) thermostat which bypasses the oil cooler until the oil has reached its minimum operating temperature. When used in conjunction with an oil cooler, this results in quicker engine warm-ups and prevents oil viscosity loss in colder conditions. Sandwich plate rotates 360 degrees around the inner extension screw for optimal positioning of adapter fittings

MOCAL oil control systems

**Specifications:**

Built-in 190°F (88°C) thermostat; Uses factory equivalent oil filter Machined from billet aluminum and hard anodized (Black). O-Ring (ORB) fluid connections; (2) female M22x1.5mm ports that adapt easily to -AN -8, -10, or -12; Additional 1/8" NPT gauge/ auxiliary port with plug; Designed and made in England; Weight: 1.75 lbs / dimensions below.

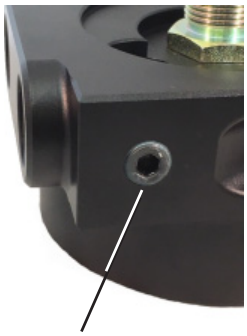


| | | |
|---|---|---|
| **Billet Thermo Sandwich Plate** | **SP16T** | **$189.50** |
| *for 13/16"-16 oil filters* | | |
| **Fittings for Above (2) required:** | | |
| **Union M22 x -8AN** | **M22AN8-SE** | **$7.90** |
| **Union M22 x -10AN** | **M22AN10-SE** | **$7.90** |
| **Union M22 x -12AN** | **M22AN12-SE** | **$7.90** |

NEW

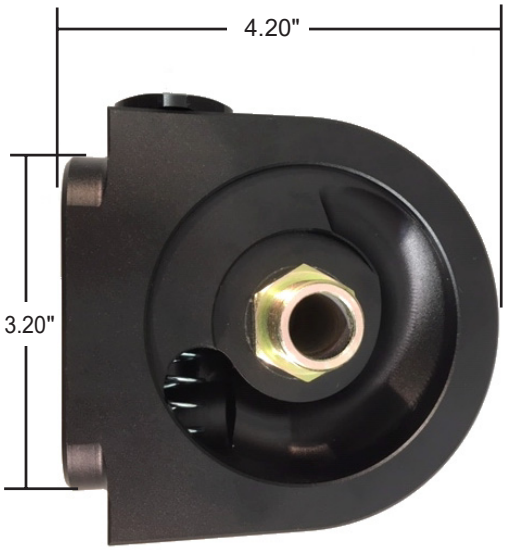


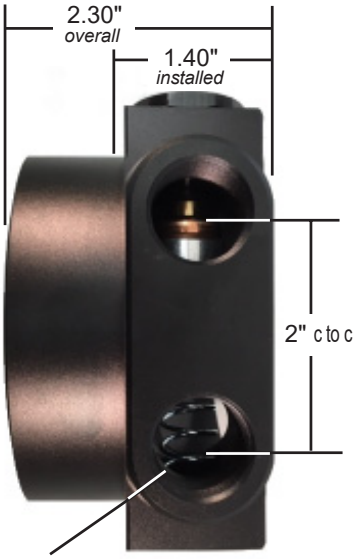


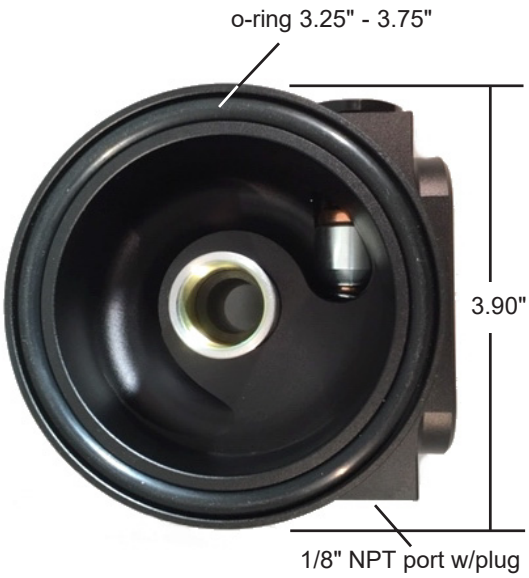


***BAT** inc.* **7630 Matoaka Road. Sarasota, FL 34243 ♦ phone (941) 355-0005 ♦ fax (941) 355-4683**

*Prices subject to change without notice.*

## VW/AUDI RELATED

*The TOP1LPT is supplied with both long & short threaded extensions allowing instalation with, or without, factory VW heat exchanger.*

### VW/Audi VR6 12v, 24v, R32 & Others

The TOP1LPT thermostatic oil take-off plate allows external oil cooling to be added to VR6 type engines. VW/Audi equips most of its engines with a small water to oil heat exchanger located between the engine block and oil filter. As the VR6 engine uses with a canister type oil filter, the factory water/oil heat exchanger is instead located on the front of the engine block retained by a cap that mounts the device to the engine. The Mocal TOP1LPT is designed to fit in this location and thermostatically control oil flow to a remote mounted oil cooler. The TOP1LPT can be installed with the factory heat exchanger in place or deleted; we provide both a long and short length threaded extension for installation.

| description | part# | price |
|---|---|---|
| VR6 Oil Cooler Take-off w/ thermo | T0P1LPT | $165.00 |
| VR6-32* Oil Cooler Take-off w/thermo | T0P1LPT-32 | $175.00 |

**Version with longer extension is available for engines using larger (thicker) 3" factory heat exchanger.*

*A version with longer extension is available for engines using larger (thicker) 3" factory heat exchanger.*

### VW/Audi TSi/FSi

VW/Audi TSi / FSi type engines date from 2006-2014 and come installed in a wide range of VW and Audi vehicles. Unfortunately it gets confusing as there are numerous engine and vehicle codes for this series applications. The correct engine will have the oil filter at the top front corner of the engine, facing up near the alternator and water/oil cooler. The mount for the filter will be aluminum not plastic. The engine will have chain driven camshafts not belt. The stock oil filter on these engines is unique as it uses a male M27 threaded lance to engage a drain back feature. Our sandwich plate is compatible and once installed will permit the use of a more common oil filter in 3/4"-16 like is used on 1.8T type engines.

| description | part# | price |
|---|---|---|
| VW/Audi Thermo Sandwich Plate TSi | SP1T-FSI | $150.00 |

**BAT** *inc.* 7630 Matoaka Road. Sarasota, FL 34243 ♦ phone (941) 355-0005 ♦ fax (941) 355-4683

*Prices subject to change without notice.*

## Lotus Elise/Exige Sandwich Plate

Mocal is the original equipment supplier to Lotus for the Toyota 2ZZ-GE engine mounted thermostatic oil cooler sandwich plate used on the Elise and Exige models. If you are in the market for a replacement we can provide these at a reasonable price. Units are complete including 5/8" BSP union adapters for connection to standard oil cooler hoses or optionally 5/8" BSP x -10 adapters are available if you have re-plumbed using -AN size hose and fittings. Filter center bolt and bleed cock are also included.

| description | part# | price |
|---|---|---|
| Lotus Elise/Exige Thermo Sandwich Plate | SP3L | $160.00 |

Threaded adaptors are available in -AN, BSP & metric sizes for all components we offer.

NEW

## Billet Sandwich Plate

Our new billet non-thermo sandwich plate is a lightweight, high-flow sandwich plate machined from 6061 aluminum. It's used to add an external cooler to your vehicles oil system. This oil sandwich plate is available for either M20 or 3/4"-16 oil filters and has two 1/8" NPT plugged ports for sensors, gauges or oil feed lines. Inlet/outlet ports to cooler are ORB M22 x 1.5 thread; we can provide union/adapters to -8AN or -10AN. Specs: weight 9.5oz, square profile o-ring, made in England.

| description | part# | price |
|---|---|---|
| Billet Sandwich Plate for M20 filter | SP1BF | $85.00 |
| Billet Sandwich Plate for 3/4"-16 filter | SP1B | $85.00 |

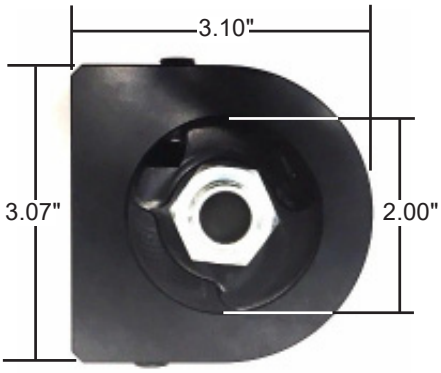


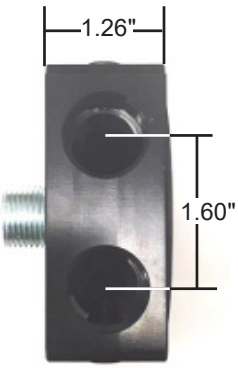


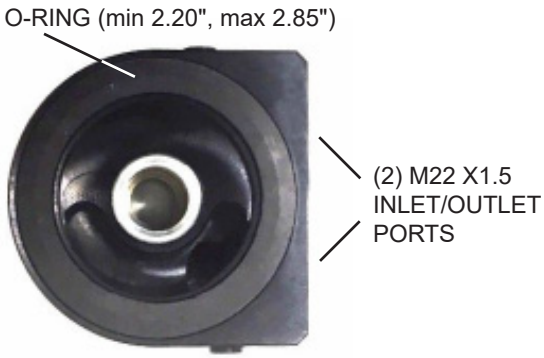


**BAT** *inc*. 7630 Matoaka Road. Sarasota, FL 34243 ♦ phone (941) 355-0005 ♦ fax (941) 355-4683

*Prices subject to change without notice.*

Back to HOME

MOCAL USA

## Mocal HD Oil Take-off Plate

| center thread | port thread | part# | price |
|---|---|---|---|
| 3/4"-16 | 1/2 BSP | TOP1 | $42.50 |
| 18mm | 1/2 BSP | TOP1D | $42.50 |
| 20mm | 1/2 BSP | TOP1F | $42.50 |

*These precision die cast aluminum Mocal manufactured plates are both strong, and lightweight, offering the quality of billet components at a sensible price. Price includes o-ring, fittings are sold separately.*

## Standard Oil Take-off Plate

| center thread | port thread | part# | price |
|---|---|---|---|
| 3/4"-16 | 1/2 NPT | TOP111 | $26.95 |
| 13/16"-16 | 1/2 NPT | TOP114 | $26.95 |
| 18mm | 1/2 NPT | TOP112 | $26.95 |
| 20mm | 1/2 NPT | TOP116 | $26.95 |
| 22mm | 1/2 NPT | TOP118 | $26.95 |

*A bit lighter duty than the Mocal TOP versions, this series of aluminum take-offs are suitable for most applications and hard to beat for the money. Price includes o-ring, fittings for fluid connection are sold separately.*

Note: Threaded adaptors are available in -AN, BSP & metric sizes for all components we offer.

## Low Profile Oil Take-off Plate

| center thread | port thread | part# | price |
|---|---|---|---|
| 3/4"-16 | 1/2 BSP | TOP1LP | $99.50 |
| 13/16"-16 | 1/2 BSP | TOP1LPC | $99.50 |
| 18mm | 1/2 BSP | TOP1LPD | $99.50 |
| 20mm | 1/2 BSP | TOP1LPF | $99.50 |

*These high quality die cast constructed plates are the choice for use in tight quarters- especially good for engine swaps and kit car applications. Unique 2 piece design allows plate to index 360 degrees before being tightened into place by top cover. Price includes o-ring, fittings for fluid connection are sold separately.*

## Bolt-On Oil Take-off Plates

| application | port thread | part# | price |
|---|---|---|---|
| Chevy V8 | 1/2 NPT | TOP113 | $28.50 |
| Triumph TR7 | 1/2 BSP | TOP7 | $80.00 |
| FE Ford | 1/2 NPT | TOPF8 | $50.00 |
| VW (air cooled) | 3/8 NPT | TOP117 | $30.00 |
| Mini R52/53 | M22 x 1.5 | TOP3 | $195.00 |
| Mini R56 | M22 x 1.5 | TOP17 | $197.50 |
| Rover/Buick 215 V8 | 1/2 BSP | PC1 | $179.00 |

*Bolt-on oil take off's are designed to bolt in place of existing oil filter canisters or oil pump covers. Most include required hardware and gaskets. Fittings for fluid connection are sold separately.*

Mini R56

Mini R52/53

Ford FE

Rover/Buick 215 V8

MOCAL USA

**BAT** *inc.* **7630 Matoaka Road. Sarasota, FL 34243 ♦ phone (941) 355-0005 ♦ fax (941) 355-4683**

*Prices subject to change without notice.*

## BOLT-ON TYPE OIL TAKE-OFF PLATES (continued)

### BMW Z3/318 M42 Engine Take-Off Plate

| description | part# | price |
|---|---|---|
| Oil Take-Off Plate BMW M42 Type Engine | T0P9 | $185.00 |

*This oil take-off plate takes the place of the stock canister oil filter assembly and is generally used for remote oil filter/oil cooler installations. Inlet/outlet ports are M22 x 1.5 thread so we have a number of options from -AN male unions, -AN hose ends and for low clearance -AN banjos. Machined billet aluminum - color red, gasket included.*

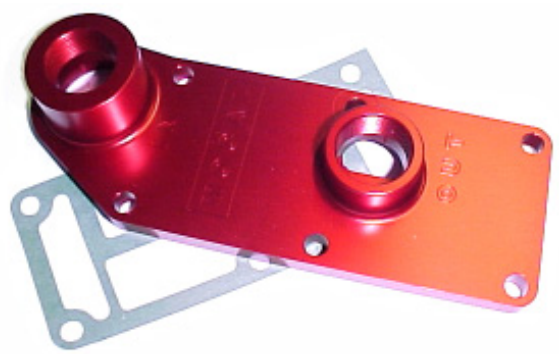

BMW Z3/318 M42

### Mini R52/53 Take-Off Plate

| description | part# | price |
|---|---|---|
| Mini R52/53 | T0P3 | $195.00 |
| Supercharged W11B16 "Tritec" T16B4 Engine | | |
| 2002-2006 R53 Hatch | | |
| 2005-2008 R52 Convertable | | |

*This oil take-off plate replaces the stock water/oil cooler located on the oil filter housing allowing connections to a larger, more efficient, oil cooler of your choice. Inlet/outlet ports are M22 x 1.5 thread so we have a number of options from -AN male unions, -AN hose ends and for low clearance -AN banjos. Machined billet aluminum construction.*

Mini R52/53

Note: Threaded adaptors are available in -AN, BSP & metric sizes for all components we offer.

### Mini R56 Take-Off Plate

| description | part# | price |
|---|---|---|
| Mini R56 | T0P17 | $197.50 |
| Turbocharged N14B16A "Prince" Engine | | |
| Gen 2 Mini R56 body type 2007-2013 | | |

*This oil take-off plate replaces the stock water/oil cooler located on the oil filter housing allowing connections to a larger, more efficient, oil cooler of your choice. Our design incorporates the water passage internally, rather than having to have a tube on the exterior that loops in/out like other (less desirable) versions of this component. We also provide a M12 x 1.5 sender/gauge port. Inlet/outlet ports are M22 x 1.5 thread so we have a number of options from -AN male unions, -AN hose ends and for low clearance -AN banjos. Machined billet aluminum construction.*

Mini R56

**BAT** *inc.* **7630 Matoaka Road. Sarasota, FL 34243 ♦ phone (941) 355-0005 ♦ fax (941) 355-4683**

*Prices subject to change without notice.*

## BMW Oil Cooler Take-off's

We can supply a number of options for a variety of BMW engines from the mid 90's to present. There are two basic types. One is a bolt-on adapter that fits engines that have provisions for factory plumbing, often called "Euro housings". The other type is a replacement top cap for the oil filter housing with provisions for fluid connections to a oil cooler that suits M50, S50, S52, S54 engines with aluminum filter cap with through bolt. We are working on a similar version for N52, N54 engines twith plastic filter housing.

### *BMW E36/E46/E90 Bolt-On Oil Take-off Plate*

| application | port thread | part# | price |
|---|---|---|---|
| BMW E36/46/90 | (M22x1.5) | T0P91 | $40.00 |

*Some BMW E36, E46, E90 chassis cars are factory equipped with oil coolers utilizing manifold "hard lines" that can cause fitment issues for cars with superchargers, Accusumps or other aftermarket plumbing components. Our take off plate allows for more versatile thread-on -AN type fluid connections in place of the factory oil cooler tube/hoses. Once converted -AN hose and fittings can be used to connect to an aftermarket oil cooler. Plate is engineered with M22 x 1.5 female ports that accept -10AN or -12AN male unions for use with standard -AN hose ends or direct to -AN swivel hose ends in 00º, 45º or 90º angles. Although designed for the E36/46/90 engine this filter housing can be used on some E82/92/93 applications with 41.5mm spacing. This is also true for factory oil coolers that uses a similar bolt-on flange fluid connection, again check for 41.5mm spacing. Fittings are optional, specify requirement when ordering.*

shown with optional fittings

### *BMW Filter Housing Cap w/ Ports*

| application | port thread | part# | price |
|---|---|---|---|
| BMW (various) | (M22x1.5) | OCTBMW2 | $209.00 |

*For engines with aluminum oil filter housings and top caps with through bolt, we make this billet aluminum top cap with ports that makes adding an oil cooler easy. Our design incorporates a self adjusting internal sealing mechanism for proper seating against the filter assuring maximum oil flow through the oil cooler and filtration without "blow-by". Cap uses standard type filters and stock cap through bolt. Inlet/outlet Ports are M22 x 1.5 o-ring ports for use with standard -AN hose ends or direct to -AN swivel hose ends in 00º, 45º or 90º angles. A 1/8" NPT side port is provided for external oil pressure gauge (plug included). Fittings are optional, specify requirement when ordering.*

*NOTE: We are working on a version similar to this for (N52, N54) engines that have plastic oil filter housings and caps. Availability to be announced.*

**BAT *inc*. 7630 Matoaka Road. Sarasota, FL 34243 ♦ phone (941) 355-0005 ♦ fax (941) 355-4683**

*Prices subject to change without notice.*

Back to HOME

To assist in selecting the proper sandwich plate or take-off adaptor- use the following list to help determine your vehicles oil filter thread size. We have compiled the following information and believe it be accurate. If you do not see your application listed, or need to advise a correction, please contact us. Other than knowing the actual filter thread on your engine, it is somewhat important to know your oil filters o-ring diameter. Mocal sandwich plates and adaptors are designed to fit with oil filters o-rings in the 2 1/4" to 3" o.d. range. Our components are compatible with better than 90% of applications from 1980 to present. For old style, "large can", filters (o-rings greater than 3" o.d.) we can usually recommend an alternative filter that will be compatible with our product. *More information on alternate filters can be found on the next page.*

**Acura**

| | | |
|---|---|---|
| Integra | 86-87 | 22mm |
| Integra | 88-01 | 20mm |
| Legend, 3.2TL, 3.5RL | 88 > | 22mm |
| Vigor, 2.5TL | All | 20mm |
| NSX* | 91 > | 22mm |
| * may require alternate filter | | |
| 2.2 CL, 3.0 CL, SLX | All | 20mm |
| RSX, TSX | 02-06 | 20mm |

**Alfa Romeo**

| | | |
|---|---|---|
| 4 Cylinder | 72 > | 3/4"-16 |
| V6 GTV6, Milano, 164 | 81-95 | 3/4"-16 |

**American Motors**

| | | |
|---|---|---|
| All V8 | 60-83 | 13/16"-16 |
| All Models | 60-86 | 13/16"-16 |
| All Models | 87 > | 20mm |

**Audi**

| | | |
|---|---|---|
| All models w/spin-on | | 3/4"-16 |

**BMW**

| | | |
|---|---|---|
| All models w/spin-on | | 3/4"-16 |

**Buick**

| | | |
|---|---|---|
| L6, V8 | 50-74 | 13/16"-16 |
| V8 305, 350 | All | 13/16"-16 |
| V6 231, 252 | All | 18mm |
| V6 2.8L, 3.1L, 3.3L, 3.8L | All | 18mm |

**Cadillac**

| | | |
|---|---|---|
| V8 4.1L, 4.5L, 4.6L, 4.9L | All | 13/16"-16 |
| V6 All | 85 > | 18mm |
| CTS, 5.7L | 04 | 13/16"-16 |
| XLR, 4.6L | 04-09 | 13/16"-16 |
| XLR-V | ALL | 22mm |
| STS-V | ALL | 22mm |

**Chevrolet** *(see alternate filters)*

| | | |
|---|---|---|
| V8 350 LS1, Corvette, Camaro | 97-04 | 13/16"-16 |
| V8 LS7, LS9, LS3 Corvette | 06 > | 22mm |
| V8 350 ZR1 | All | 20mm |
| V8 6.2L LS3, LSA Camaro | 2010 > | 22mm |
| V8 350, All | 92-96 | 18mm |
| V8 SB & BB | 68-01 | 13/16"-16 |
| V6 All | 78 > | 18mm |

**Chevrolet/GMC Truck** *(see alternate filters)*

| | | |
|---|---|---|
| V6 4.3L | 85 > | 18mm |
| V8 2wd Pickup, Blazer, Suburban | 88-98 | 13/16"-16 |
| V8 4wd Pickup, Blazer, Suburban | 88-98 | 18mm |
| V6 & V8 Sierra, Silverado (gas) | 99 > | 13/16"-16 |
| V8 Vans All | 70 > | 13/16"-16 |
| V8 Diesel All | 82 > | 13/16"-16 |
| LS Engines* | to 2006 | 13/16"-16 |
| LS Engines* | 2007 > | 22mm |

*sandwich plate if clearance permits (make sure filter is not too low) or use our A0TGM bolt-on thermostatic take off.

**Chrysler**

| | | |
|---|---|---|
| V8 All | 59 > | 3/4"-16 |
| V6, I6 | All | 3/4"-16 |
| L4 | All | 3/4"-16 |
| V8 All | 08 > | 22mm |

**Dodge**

| | | |
|---|---|---|
| V10 Viper | All | 3/4"-16 |
| V8 All | 60-07 | 3/4"-16 |
| V6 All (except Stealth) | 93-07 | 3/4"-16 |
| Stealth | All | 20mm |
| Avenger, Caravan, Neon, Stratus | 96-05 | 3/4"-16 |
| SRT 10, Hemi, Charger | to 06 | 3/4"-16 |
| V8 / Hemi | 08 > | 22mm |

**Dodge Truck**

| | | |
|---|---|---|
| V8, V6 All | 74-07 | 3/4"-16 |
| V10 | 94 > | 3/4"-16 |
| V8, V6 All | 08 > | 22mm |

**Eagle**

| | | |
|---|---|---|
| Summit, Talon | 95 > | 20mm |
| Talon (non-turbo) | 89 > | 3/4"-16 |
| Vision | 93 > | 3/4"-16 |

**Ferrari**

| | | |
|---|---|---|
| All models w/spin-on | 66 > | 3/4"-16 |

**Fiat**

| | | |
|---|---|---|
| All models over 900cc | | 3/4"-16 |

**Ford Germany**

| | | |
|---|---|---|
| All models with spin-on | | 3/4"-16 |

MOCAL USA

MOCAL USA

MOCAL oil control systems

***BAT** inc.* **7630 Matoaka Road. Sarasota, FL 34243 ♦ phone (941) 355-0005 ♦ fax (941) 355-4683**

*Prices subject to change without notice.*

Back to HOME

MOCAL USA

**Ford USA**

| | | |
|---|---|---|
| V8 All | 58 > | 3/4"-16 |
| V8 Mustang GT | 2011 > | 22mm |
| V8 4.6L, 5.4L | 92 > | 22mm |
| V8 3.4L Taurus | 96-99 | 22mm |
| L6 All | 58-87 | 3/4"-16 |
| V6 2.5L, 3.0L (24v) | 95 > | 22mm |
| V6 3.0L, 3.8L, SHO All | 87 > | 3/4"-16 |
| I4 & V6 Probe | 93 > | 20mm |
| I4 1.8L Escort/Tracer | 90-96 | 20mm |
| I4 2.0L Contour, Focus | 95 > | 3/4"-16 |
| I4 1.6, 1.9, 2.0, 2.3 | 71> | 3/4"-16 |

**Ford Truck**

| | | |
|---|---|---|
| V6 3.8L Windstar | 96 > | 3/4"-16 |
| V6 4.0L All | 90 > | 3/4"-16 |
| V8 4.6L, 5.4L Modular | 97 > | 22mm |
| V8 (with metric thread) | 94 > | 22mm |
| V8 (with standard thread) | 71 > | 3/4"-16 |
| V10 All | 97 > | 22mm |

**Honda**

| | | |
|---|---|---|
| I4 & V6 All* | 88-03 | 20mm |
| *Civic / CRX | 84-87 | 22mm |
| *S2000 | 00-06 | 20mm |

**Hummer**

| | | |
|---|---|---|
| Gas & Diesel | All | 13/16"-16 |

**Hyundi**

| | | |
|---|---|---|
| V6 | > 05 | 20mm |
| 4 Cyl | > 06 | 20mm |

**Infinity**

| | | |
|---|---|---|
| G20 | 91-96 | 3/4"-16 |
| G20, I35, G35 | 99 > | 20mm |
| J30, M30, Q45 | 90-96 | 3/4"-16 |
| I30 | 96-99 | 20mm |
| Q45, QX4 | 97 > | 20mm |

**Isuzu**

| | | |
|---|---|---|
| Amigo, Rodeo, Hombre (4 cyl) | All | 18mm |
| V6 Amigo, Rodeo, Oasis, Trooper | 94 > | 20mm |
| Vehicross | 99 > | 20mm |

**Jaguar**

| | | |
|---|---|---|
| 2.5L, 3.0L 24v | 98 > | 22mm |
| X Type 2.5-3.0L | 02-06 | 3/4"-16 |
| All V8 | 97 > | 1"-12 |
| Other 6 cyl & 12 cyl | 78 > | 1"-12 |

**Jeep**

| | | |
|---|---|---|
| V8 All | 70-86 | 3/4"-16 |
| V8 Grand Cherokee | 93 > | 3/4"-16 |
| I6 All | 70-90 | 3/4"-16 |
| 4.0L | 91 > | 20mm |

**KIA**

| | | |
|---|---|---|
| Sportage, Optima Spectra | All | 20mm |

**Land Rover**

| | | |
|---|---|---|
| V8 | All | 3/4"-16 |

**Lexus**

| | | |
|---|---|---|
| LX450 | 96-97 | 3/4"-16 |
| V6, I6 | 90 > | 3/4"-16 |
| LX470, RX300 | 98 > | 3/4"-16 |

**Lincoln**

| | | |
|---|---|---|
| V8 5.0L, 5.8L All | 77 > | 3/4"-16 |
| V8 4.6L, 5.4L All | 91 > | 22mm |
| V6 All | 88 > | 3/4"-16 |
| V6 (24v) | All | 22mm |
| LS 3.0 | 00-04 | 3/4"-16 |

**Lotus**

| | | |
|---|---|---|
| All models | 71 > | 3/4"-16 |

**Maserati**

| | | |
|---|---|---|
| V8 3.2L (Bi-turbo) | | 3/4"-16 |
| V6 2.8L (Bi-turbo) | | 3/4"-16 |

**Mazda**

| | | |
|---|---|---|
| RX8 | >06 | 20mm |
| Rotory All | 71 > | 20mm |
| Miata 1.6L, 1.8L | 90 > | 20mm |
| B3000/4000 Navajo | 94 > | 3/4"-16 |
| MPV | 89-98 | 20mm |
| MPV | 99-06 | 22mm |
| Mazda 3, 2.0L | 04 > | 20mm |
| Mazda 6, 3.0L | 03 > | 22mm |

**Mercedes**

| | | |
|---|---|---|
| 190 Series (except 16v) | All | 3/4"-16 |
| 300 Series (except CE) | All | 3/4"-16 |

**Mercury**

| | | |
|---|---|---|
| V8 All | 58 > | 3/4"-16 |
| V8 4.6L, 5.4L | 91 > | 22mm |
| I6 All | 58-87 | 3/4"-16 |
| V6 2.5, 3.0 (24v) | All | 22mm |
| V6 (12v) | All | 3/4"-16 |
| V6 Villager | All | 20mm |
| I4 Capri | 91-94 | 20mm |

**Mitsubishi**

| | | |
|---|---|---|
| All Models* | 83 > | 20mm |
| *Eclipse 4 cyl (non-turbo) | 95-99 | 3/4"-16 |
| Eclipse 4 cyl (non-turbo) | 00 > | 20mm |
| Lancer, EVO | 02-06 | 20mm |
| V6 Eclipse, Galant | 99 > | 20mm |
| Montero, Pickup, Van | 86 > | 20mm |
| Starion | 83-89 | 20mm |

MOCAL oil control systems

MOCAL USA

***BAT** inc.* 7630 Matoaka Road. Sarasota, FL 34243 ♦ phone (941) 355-0005 ♦ fax (941) 355-4683

*Prices subject to change without notice.*

Back to HOME

**Nissan/Datsun**

| | | |
|---|---|---|
| All Models (except below) | 74 > | 3/4"-16 |
| 300Z, 350Z, 370Z, GTR | ALL | 20mm' |
| RB Engines | ALL | 3/4"-16 |
| X-terra | 03-06 | 20mm |
| Altima 4 cylinder | 98 > | 20mm |
| Maxima, Sentra, 200SX, 300Z | 95 > | 20mm |
| 3.3L, 3.5L, Pathfinder | 96 > | 20mm |

**Oldsmobile** *(see alternate filters)*

| | | |
|---|---|---|
| V8 All | 60 > | 13/16"-16 |
| V8 Aurora | 95 > | 13/16"-16 |
| V6 All | 95 > | 18mm |
| Quad 4 | 88-95 | 18mm |

**Plymouth**

| | | |
|---|---|---|
| V8 All | 60 > | 3/4"-16 |
| Acclaim, Breeze, Neon All | 90 > | 3/4"-16 |
| Colt, Lazer All | 89 > | 20mm |
| Prowler | All | 3/4"-16 |
| Voyager | All | 3/4"-16 |

**Pontiac** *(see alternate filters)*

| | | |
|---|---|---|
| V8 305/350 (Chevy) | 77 > | 13/16"-16 |
| V8 | 71 > | 13/16"-16 |
| V8 LS1 | 98 > | 13/16"-16 |
| V6 All | 76 > | 18mm |

**Porsche**

| | | |
|---|---|---|
| 911 | 65-71 | 3/4"-16 |
| 911 | 72-95 | 1"-12 |
| 911 Turbo | 91-94 | 20mm |
| 911 3.6L | 94-98 | 20mm |
| 914 | 70-77 | 3/4"-16 |
| 924 | 77-83 | 3/4"-16 |
| 928 | 78 > | 20mm |
| 944, 944T, 944S, 968 | 82 > | 20mm |

**Saab**

| | | |
|---|---|---|
| 4 cyl 99, 900, 9000 | 71 > | 3/4"-16 |
| V6 900, 9000 | 94 > | 18mm |
| 9.3, 9.5 | 99-02 | 3/4"-16 |
| 9.7x | ALL | 13/16"-16 |
| 9.2, 9.5 | 05 > | 20mm |

**Saturn**

| | | |
|---|---|---|
| All 1.9L | 91 > 01 | 3/4"-16 |
| Relay 3.5L, VUE w/Honda V6 | | 20mm |

**Scion**

| | | |
|---|---|---|
| XA, XB, TC | ALL | 3/4"-16 |
| FRZ | 2012 > | 20mm |

**Subaru**

| | | |
|---|---|---|
| All Models* | 72-89 | 3/4"-16 |
| *Justy | 89 | 20mm |
| *Loyale, XT | 90 | 3/4"-16 |
| All Models | 90 > | 20mm |

**Suzuki**

| | | |
|---|---|---|
| All 3 & 4 Cylinder | 86 > | 3/4"-16 |

**Toyota**

| | | |
|---|---|---|
| All Models | 70 > | 3/4"-16 |
| Trucks - except van | 75 > | 3/4"-16 |
| FRS/GT86 | 2012> | 20mm |

**Volkswagen**

| | | |
|---|---|---|
| 4, 5, 6 cyl. w/spin-on | 75 > | 3/4"-16 |
| Diesel w/spin-on | 80-98 | 3/4"-16" |

**Volvo**

| | | |
|---|---|---|
| All Models | 90-99 | 3/4"-16 |

MOCAL oil control systems

Oil fIlter thread by common Japanese engine codes

| | | |
|---|---|---|
| Honda B16, B18 | 89-01 | 20mm |
| Honda K20, K24 | 02 > | 20mm |
| Honda F20, F22 | 99-09 | 20mm |
| Mazda 13B | 84-03 | 20mm |
| Mitsubishi 4G63, 64 | 90-06 | 20mm |
| Nissan CA18, SR20 (S13) | 91-94 | 3/4"-16 |
| Nissan RB20,25,26 | ALL | 3/4"-16 |
| Nissan VG30 | ALL | 3/4"-16 |
| Nissan VQ25, 35, 37 | ALL | 20mm |
| Nissan VR38 | ALL | 20mm |
| Nissan SR20 (S14,15) | 95-02 | 20mm |
| Totota 2JZGTE | 91-02 | 34"-16 |
| Subaru EJ257 | 04-16 | 20mm |
| Subaru FA20 | 16 > | 20mm |

MOCAL USA

MOCAL USA

**BAT** *inc.* 7630 Matoaka Road. Sarasota, FL 34243 ♦ phone (941) 355-0005 ♦ fax (941) 355-4683

*Prices subject to change without notice.*

Back to HOME

# Additional Information

### *Plumbing Connections*

Most Mocal sandwich plates and take-off adaptors are tapped parallel thread female and designed to receive a male/male union, sealing on a bonded washer. By tightening the union down "all-the-way to the hex" it takes up lessspace. We can supply 1/2" BSP amd M22 x 1.5 unions in a variety of sizes, (-6, -8, -10, -12AN). Taper type (NPT) unions share the same thread pitch as BSP and could be used, however NPT fittings will increase the space required to make fluid connections. Also, care should be taken not to overtighten taper unions as it is possible to crack the casting. BAT is one of the nations largest distributors of -AN/JIC plumbing and should be able to supply your plumbing needs at the best price.

### *Installation Notes*

For the most part, installing a sandwich plate between the engine block and filter is a very simple operation: remove the filter, thread on the plate, rotate the inlet/outlet fittings to a position where oil hose connections are accessible, tighten the plate into position, refit the oil filter. Clearance issues- either due to the additional height gained by adding a plate between the block and filter, or a o-ring seal diameter issue- can usually be resolved by using an alternate oil filter. We have compiled additional information (below) on alternative filters for some popular applications. In cases where the sandwich plate will not adapt to the engine filter boss location- either due to o-ring diameter, or the filter being recessed (many GM engines) - we can supply a spacer ring. Spacers are available in optional thicknesses, and are designed to raise the sandwich plate enough to allow inlet/outlet port conncetion.

*Spacer Rings*

### *Filters- 3/4"-16 Thread*

These are by far the most popular filters, and almost always compatable with our products for o-ring diameter. In some "tight-fit" installations like; engine swaps, race cars w/headers, rods & customs, etc., there might be a better filter (size) choice. Check the stock spec on your application in an oil filter catalog. Select a filter with similar specifications in the alternate dimension you need. We have listed a some suitable Ford V8 filters below. As you can see, the simplest thing to do if your FL1A (Fram PH8A) is clearance limited- exchange it for a PH16 which saves almost 1.5" off the height. *We refer to Fram part numbers, as they are easy to cross reference to your favorite brand.*

**Optional Ford V8 Filters 3/4"-16 Thread**

| Fram Part# | Filter Height | Filter O.D. | O-ring O.D. | O-ring I.D. | Relief Setting | Compatible Size |
|---|---|---|---|---|---|---|
| PH8A | 5.140" | 3.812" | 2.796" | 2.421" | 8-10 | YES |
| PH16 | 3.687" | 3.656" | 2.75" | 2.375" | 8-10 | YES |
| PH43 | 4.00" | 3.812" | 2.796" | 2.421" | 8-10 | YES |
| PH2951 | 3.359" | 3.00" | 2.421" | 2.125" | 9-12 | YES |
| PH3512 | 2.890" | 3.781" | 2.812" | 2.421" | 9-12 | YES |
| PH3614 | 3.359" | 3.00" | 2.781" | 2.484" | 9-12 | YES |

### *Filters- 13/16"-16 Thread, GM V8's*

Many GM V8 engines use bulky, large can filters, and are not always compatible with our sandwich plate adaptors 2.25" - 2.95" o-ring boss. Generally we replace (Fram* PH13 & PH30) with either (Fram* PH25 or PH3506) which utilize an o-ring diameter that is compatible with our products. Filter performance is similar on these compact modern filters (see specifications below). Additionally, they are better suited to "tight-fit" installations like; engine swaps, race cars w/headers, rods & customs, etc. Our popular SP16T is a two piece thermostatic sandwich plate, which includes a diameter/spacer, for use on engines where the filter is recessed at the rear of the block. Later GM engines and some LS type do not have the filters recessed and can use a standard sandwich plate (SP1 Type) without diameter/spacer, and still others are metric 18mm thread. It is a shame that some of the most numerically produced, and popular, engines are the most confusing to outfit with oil cooling components.* *We refer to Fram part numbers, as they are easy to cross reference to your favorite brand.*

**Optional 13/16"-16 Filters**

| Fram Part# | Filter Height | Filter O.D. | O-ring O.D. | O-ring I.D. | Relief Setting | Compatible Size |
|---|---|---|---|---|---|---|
| PH13 | 5.396" | 3.812" | 3.562" | 3.125" | 8-10 | NO |
| PH30 | 4.00" | 3.812" | 3.562" | 3.125" | 8-10 | NO |
| PH25 | 4.00" | 3.796" | 2.796" | 2.421" | 8-10 | YES |
| PH3506 | 3.359" | 3.00" | 2.781" | 2.453" | 8-10 | YES |

### *Metric Filters- 18mm, 20mm, 22mm*

Metric thread oil filters are very common on late model, 90's and newer, Asian & American 4 & 6 cylinder engines. These filters are usually compact in size and incorporate sealing o-rings that are compatible with our products. In cases where the o-ring size is not suitable, an alternate filter should be substituted.

MOCAL USA

MOCAL USA

*Prices subject to change without notice.*