DRAYTON

EIGHT BIKE HITCH MOUNTED HINGED BIKE RACK

Proudly Made in the USA

DESIGN PATENT # US D784,245S

ASSEMBLY INSTRUCTIONS AND USER MANUAL

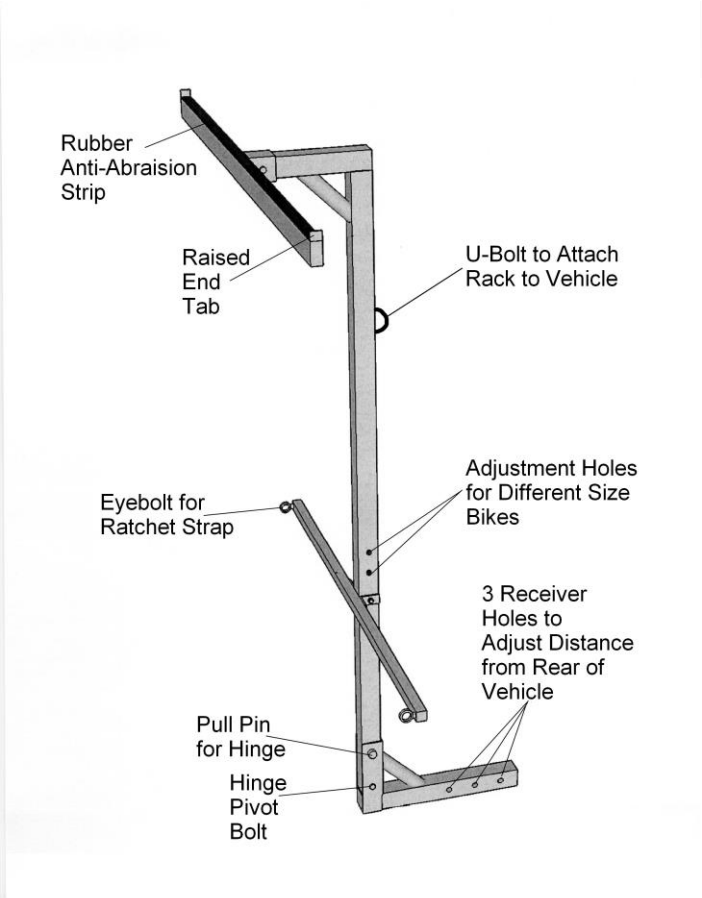

DRAYTON SOLUTIONS, LLC
1129 GALILEE RD
DAMASCUS, PA 18415
www.draytonsolutions.com
Phone: 570-493-9013 email: draytonsolutions@gmail.com
A Veteran Owned and Operated Small Business

Cautions and Warnings

Please read these cautions and warnings for your protection and safety.

Failure to follow instructions provided will void the warranty.

1. **Our bike rack may not be suitable for carbon fiber bicycles as it may damage rims.**
2. Do not attempt to fold bike rack down after bikes are installed on rack. Eight bicycles can weigh in excess of 200 lbs.
3. Bike rack weighs approximately 50 lbs. Use caution when attaching to vehicle and removing from vehicle. It is advised that two people install and remove bike rack.
4. Be sure axle nuts are tight on bicycles prior to hanging them on the rack.
5. Be sure to secure bicycles to bottom bar with ratchet strap to eliminate the chance of bicycles swinging and possibly coming off of the rack.
6. If no attachment point is available on your vehicle such as a roof rack to attach the upper portion of the bike rack to minimize sway, a hitch tightener should be used to minimize sway. If sway is not minimized damage can occur to bicycles such as chaffing where bicycles may come in contact with each other.
7. Use extreme caution when exiting driveways or parking lots with depressions or dips in the road surface. If the receiver bar contacts the road surface it may damage the mount and cause excessive sway. <u>This type of damage will void the warranty.</u>
8. Make certain your hitch is rated for the amount of weight being carried.
9. To avoid having your bikes twisting on the rack while transporting you can loop the ratchet strap around the top tube of the two outer bikes.

Parts List

The new bike rack may show signs of being previously assembled. For quality assurance each rack is assembled, tested and disassembled prior to shipping.

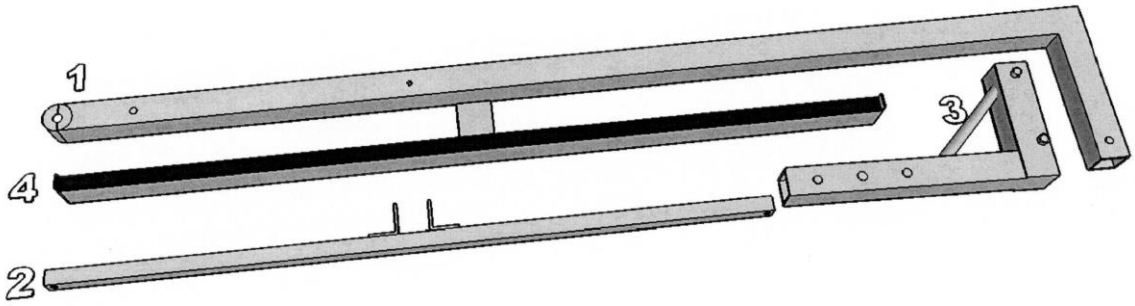

Required tools: two (2) 9/16” wrenches. One (1) ½” wrench. One 3/16” allen wrench.

1. Vertical Bar
2. Bottom Bar
3. Receiver Bar/Hitch Mount
4. Top Bar
5. Hardware

Note: If rack arrives without all parts indicated please contact us right away.

ASSEMBLY INSTRUCTIONS

Please note before you start: Use caution. This is a heavy duty bike rack and some parts are heavy. Ask for assistance if necessary.

Hardware comes with nuts, washers and lock washers on corresponding hardware. Call us if there is any confusion about assembly. (570) 493-9013

NOTE: These parts are manufactured to very close tollerances. When assembling you may need to use block of wood and hammer to position the upper bar into the hitch mount.

1. The easiest way to assemble the bike rack is to place hitch mount (3) into vehicle hitch and secure with hitch pin**. NOTE: Some receivers will not allow the receiver bar to slide all the way into the receiver. If you desire your rack to ride closer to the vehicle it may be necessary to cut off a portion of the receiver bar. If you decide to do so only cut off enough to access the hitch pin hole desired.**
2. Place vertical bar (1) into hinge aligning bottom hole in vertical bar with bottom hole in hinge bracket (3). Make sure top angle will face away from vehicle when raised to vertical position. Insert case hardened (yellow) bolt through hole and secure with flat washers, lock washer and nut.
3. Raise vertical bar and lock in place with small wire clip pin.
4. Align bottom bar (2) on vertical bar (1) at pre-drilled holes (3 positions available depending on average wheel base of bicycles being carried) and secure with hex bolt, flat washers, lock washer and nut.
5. Pull pin from hinge and lower vertical bar placing a support under vertical bar to keep top of vertical bar (1) at an accessible height.
6. Insert top bar (4) into top angle of vertical bar (1) with rubber strip up and secure with hex bolt, flat washers, lock washer and nut.
7. Install eye-bolts with flat washers, lock washer and nuts into bottom bar with loops facing away from vehicle. These are to secure bikes to the rack with the included ratchet strap.
8. Install u-bolt in vertical bar above bottom bar with flat washers, lock washers and nuts. U-bolt will accept a 1” ratchet strap to secure the vertical bar to vehicle.
9. Raise bike rack to full upright position and re-insert pin.
10. Bike rack is ready for use.

USE INSTRUCTIONS

<u>Please READ all of the instructions and follow instructions closely as not to damage bikes or your vehicle and insure tight and secure rack.</u>

1. When the rack is empty it can be folded down for access to the rear doors or lift gate of the vehicle. **<u>Remember do not attempt to fold the bike rack down after bikes are installed.</u>**

2 With bike rack installed and locked in upright position on vehicle place the first bikes' front wheel on the top bar making sure top bar goes between the spokes at the widest space (see photo) and the rear tire rests on the bottom bar. **<u>Prior to hanging bikes on rack be sure axle nuts are tight on each bike</u>.**

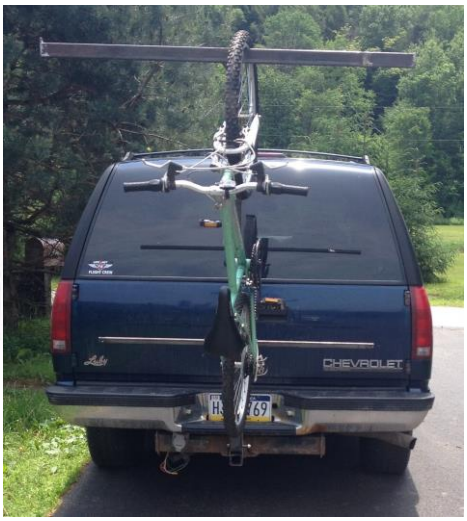

3. Move first bike as close to the center of rack as possible.
4. Place the next bike on the opposite side of the rack hanging it from the rear wheel

5. Continue hanging bikes alternating sides and alternating front and rear wheels on top bar. Rotate pedal crank on each additional bike to fit between bike frame of previous bike to assure enough space for all bikes. (see next photos)

After loading bikes, secure them to the bottom bar with ratchet strap (included) to keep them secure and from swinging and possibly coming off of the rack. **To avoid having your bikes twisting on the rack while transporting you can loop the ratchet strap around the top tube of the two outer bikes.** Also, be sure to tighten strap enough to prevent bikes from moving and chafing adjacent bikes. If you would like to keep bikes from touching each other, place blocks of foam between each bike (not included).

Important information to minimize sway of bike rack. The bike rack will have some play in most receivers. Use a 2nd ratchet strap (not included) to secure the rack to vehicle to minimize sway. If you decide to attach the rack to a roof rack be sure to attach the ends of the strap to the roof rack corner mounts not the cross bar. External rear door hinges are an alternative attachment point.

It is essential to attach the vertical bar to the vehicle for support or install a hitch tightener to minimize sway.

Caution: If using an additional ratchet strap to minimize sway do not attach support ratchet strap to your hitch receiver or any point below the lower bar as it may damage or bend the bike rack hitch mount!

If proper attachment is not possible purchase Hitch Tightener available on Amazon and other stores.

If you have a rear mounted spare tire, the rack can be mounted farther away from the rear of the vehicle by choosing the appropriate hole in the receiver bar.
If you desire your rack to sit closer to your vehicle and your hitch receiver has a stop on the inside, the receiver bar can be trimmed to allow the rack to be mounted closer to the vehicle.

WARRANTY

Failure to follow instructions provided will void the warranty.

Drayton offers a limited lifetime warranty to the original purchaser. This warranty covers manufacturer's defects only and does not include normal wear and tear or misuse of the bike rack.

Note: We are not responsible for any damage to bicycles if mounted improperly or mounted on incomplete rack (ie: missing rubber strip, anti sway measures not installed, or ratchet strap not installed etc.). We also are not responsible for damage to vehicle hitches which are not rated for the appropriate load of the bike rack with bicycles installed. Road surface strikes which damage the receiver bar will void the warranty. If you wish to return the bike rack please contact us for a return shipping label. Upon receipt of the rack it will be evaluated and an appropriate refund will be offered minus shipping costs, fees, missing parts or hardware or unreasonable damage.

Disclaimer

Drayton Solutions, LLC is not liable for any personal injury or property damage caused by improper use of our products. Improper use includes but is not limited to using damaged or incomplete equipment, improper installation of equipment, over loading of equipment, or careless use of equipment such as using product for purposes not specifically designed for.

Our bike rack may not be suitable for carbon fiber bicycles as it may damage rims. Because bikes are strapped together it may cause minor chafing of bike components.

DRAYTON SOLUTIONS, LLC
1129 GALILEE RD
DAMASCUS, PA 18415
www.draytonsolutions.com
Phone: 570-493-9013 email: draytonsolutions@gmail.com
A Veteran Owned and Operated Small Business

Rev 11: 7/10/2023