UPLIVIN GAVO USER GUIDE

2-IN-1 WALKER WHEELCHAIR

This guide covers set-up, everyday use, conversion between walker and wheelchair, adjustments and care of the UPLIVIN GAVO 2-in-1 walker wheelchair (REGULAR and SMALL). Read it before first use and keep it with the product.

IMPORTANT

- This is a QMS quick-reference guide based on the Uplivin user manual (April 2025, V1.0), where this product is called the GLIDE 2 in 1 Rollator and Transport Chair. The manufacturer's manual supplied with the product takes precedence.
- The letters (A, B, C...) next to each diagram match the figures in the Uplivin manual.



WALKER MODE



WHEELCHAIR MODE



FOLDED

1. INTENDED USE

- A rollator and an attendant-pushed wheelchair (transport chair) for people with reduced strength or limited mobility.
- Suitable for indoor and outdoor use.
- For one person only. Maximum user weight 110 kg (see section 16).
- The seat is not for carrying heavy goods.

2. SAFETY WARNINGS

WARNING

- Before use, check the GAVO is fully unfolded and locked, and that the brakes work properly.
- Always use both brake levers together, for both the driving brakes and the parking brakes.
- Make sure all parts are locked in position. Do not use the product if any part is damaged, broken, cracked or missing.
- Apply both parking brakes before sitting on the seat in walker mode.
- Do not push the GAVO forward with the brakes applied.
- Do not adjust the push tubes forward or back while someone is sitting on it.
- Do not sit in it as a wheelchair while travelling in a car, taxi or bus.
- Do not use it on stairs or rough ground such as gravel, grass, sand or soil.
- Do not lean forward when seated in wheelchair mode. It may tip over.
- Once converted to a wheelchair, do not use it as a walker until it has been converted back.
- Keep fingers clear of the frame when folding, unfolding or converting. Do not put fingers under the seat when pressing it down.
- Parts may get very hot or cold in extreme temperatures.
- Avoid long, loose clothing that could catch in the wheels.
- This is not a toy. Keep children from playing on it.

WARNING

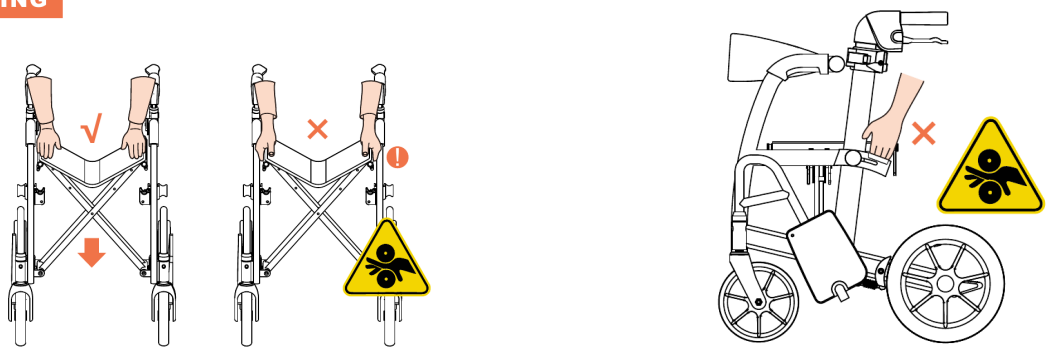

Press the seat down with flat palms on top (left). Keep fingers out of the gap between the push tubes and the frame (right).

3. PARTS (A)

A

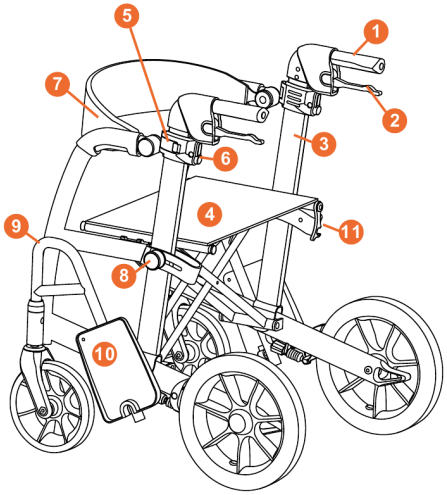

1 Push handles
2 Brake levers
3 Push tubes
4 Seat
5 Handle-tightening levers
6 Height-adjustment buttons
7 Backrest
8 Lock pins
9 Footrest frames
10 Footrests
11 Hook (folding lock)

4. UNFOLDING (B)

B

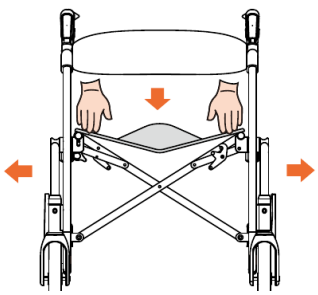

1 Undo the hook at the back of the seat.
2 Press both sides of the seat down with flat palms until it clicks into place.

CAUTION
• Do not put your fingers under the seat when pressing down.

5. FOLDING (C)

1 Pull up the strap in the middle of the seat to fold the GAVO.
2 Once folded, lock the hook at the back of the seat.

C

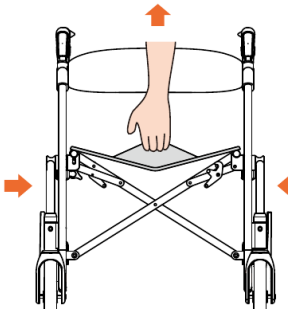

6. CONVERTING TO A WHEELCHAIR (D)

1 Apply the parking brakes on both sides.
2 Pull up the lock pins and pull both push tubes backwards until they click. Keep fingers clear of the gap between the tube and the frame.
3 Flip the backrest over to the rear.
4 Pull up the footrest frames.
5 Swivel the footrests round to the front.
6 Lower the footrests.
7 Release the parking brakes when finished.

D

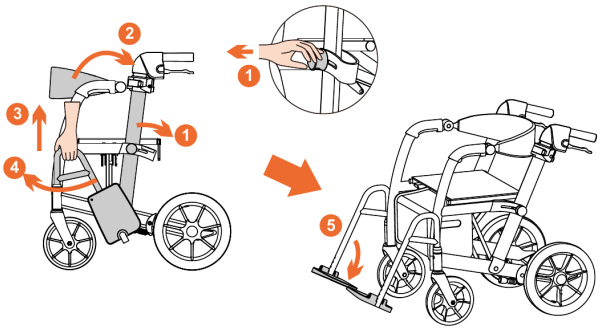

7. CONVERTING BACK TO A WALKER (E)

1 Apply the parking brakes on both sides.
2 Pull up the lock pins and push both push tubes forward until they click. Keep fingers clear of the gap between the tube and the frame.
3 Flip the backrest over to the front.
4 Fold up the footrests.
5 Pull up the footrest frames.
6 Swivel the footrests out to the sides.
7 Release the parking brakes when finished.

E

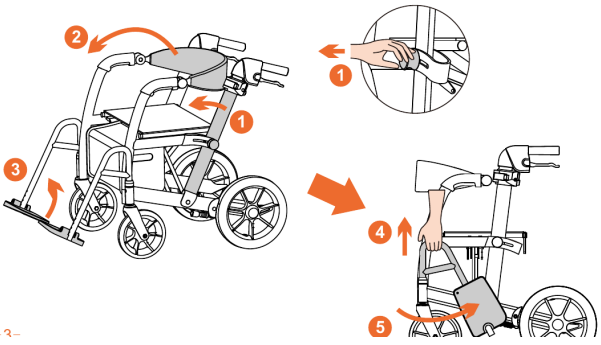

8. BRAKES (F)

1. Driving brakes: pull both brake levers up to slow down or stop.
2. Parking brakes: push both brake levers down until they stop. Release them before moving.
3. Always use both levers at the same time.

F

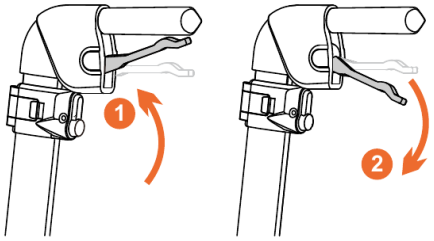

9. ADJUSTING THE HANDLE HEIGHT (G)

Stand between the handles with arms relaxed at your sides, elbows slightly bent and palms facing in. The handles should be level with your wrists.

1. Loosen both handle-tightening levers.
2. Press the height-adjustment button and slide the push handle up or down.
3. Repeat on the other side so both handles are at the same height.
4. Tighten both handle-tightening levers.

CAUTION

• Both handles must be at the same height for good posture and even weight on the frame.

G

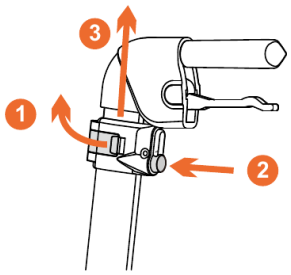

10. ADJUSTING THE FOOTREST HEIGHT (H)

1. Undo the footrest screw with a 5 mm Allen key and remove the footrest.
2. Choose the hole on the footrest frame for the height needed.
3. Line up the footrest, put the screw back in and tighten.
4. Repeat on the other side.

H

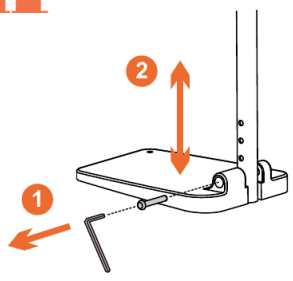

11. ADJUSTING THE BRAKES (I)

1. The brake adjustment screw is near the rear wheel.
2. Push the head of the screw towards the rear wheel and turn it to tighten or loosen the brake.
3. Check both brakes work evenly afterwards. If they still do not hold, stop using the GAVO and contact QMS.

I

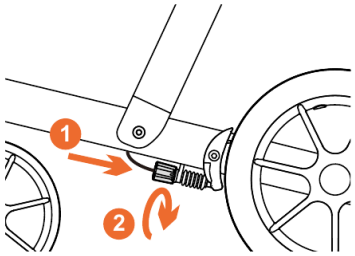

12. STORAGE BAG (J)

- The bag hangs on the two forks under the seat.
- Maximum load 5 kg.
- Empty the bag before folding.

J

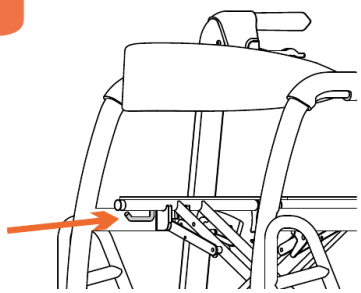

13. WALKING STICK HOLDER (K)

- The optional cane holder fits on the side of one of the push tubes.

K

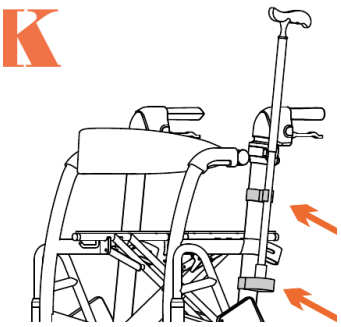

14. CARE AND MAINTENANCE

- Clean with a general-purpose detergent and lukewarm water, then dry.
- Do not store in a damp or very hot place.
- Check the brakes, wheels and lock pins regularly, and before each use.
- Wipe the PU-leather bag and backrest with a damp cloth.

15. WARRANTY

- Uplivin provides a two-year warranty.
- The warranty does not cover normal wear and tear of parts such as wheels and brake cables.
- Your rights under Australian Consumer Law are not affected.

16. SPECIFICATIONS

	REGULAR	SMALL
Maximum user weight	110 kg	110 kg
Product weight	10.8 kg	10.5 kg
Seat size (W x D)	45 x 30 cm	40 x 30 cm
Seat height	50 cm	50 cm
Handle height	83–100 cm	83–99.5 cm
Overall width	64 cm	58.7 cm
Overall length	71.5 cm	71.5 cm
Folded width	26.5 cm	26.5 cm
Wheels	8" front, 12" rear	8" front, 12" rear
Storage bag capacity	5 kg	5 kg

Certified by SGS to ISO 11199-2:2005 (rollators) and ISO 7176-8:2014 (manually propelled wheelchairs). Specifications from Locomo, the Australian supplier.

NEED HELP?

- Contact Queensland Mobility Solutions for servicing, parts, accessories and warranty claims.