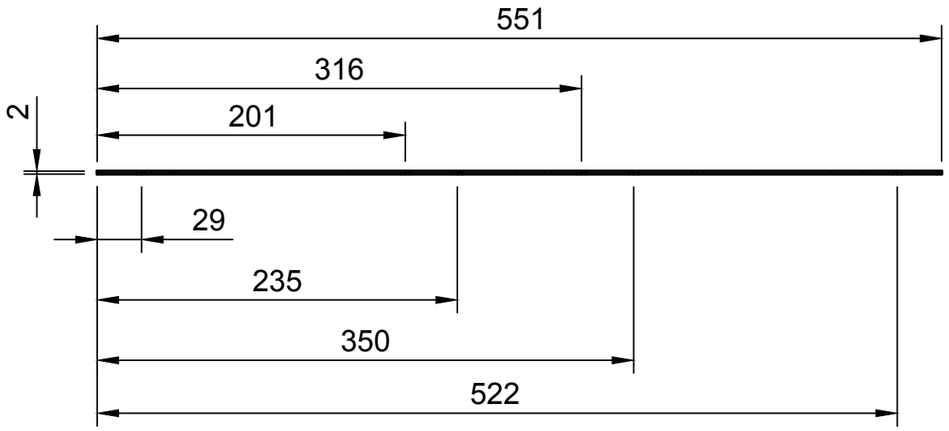

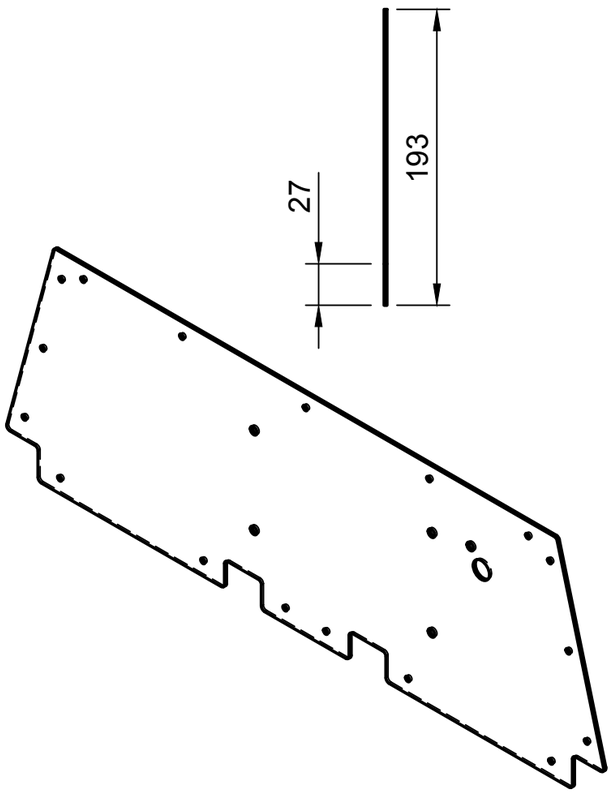

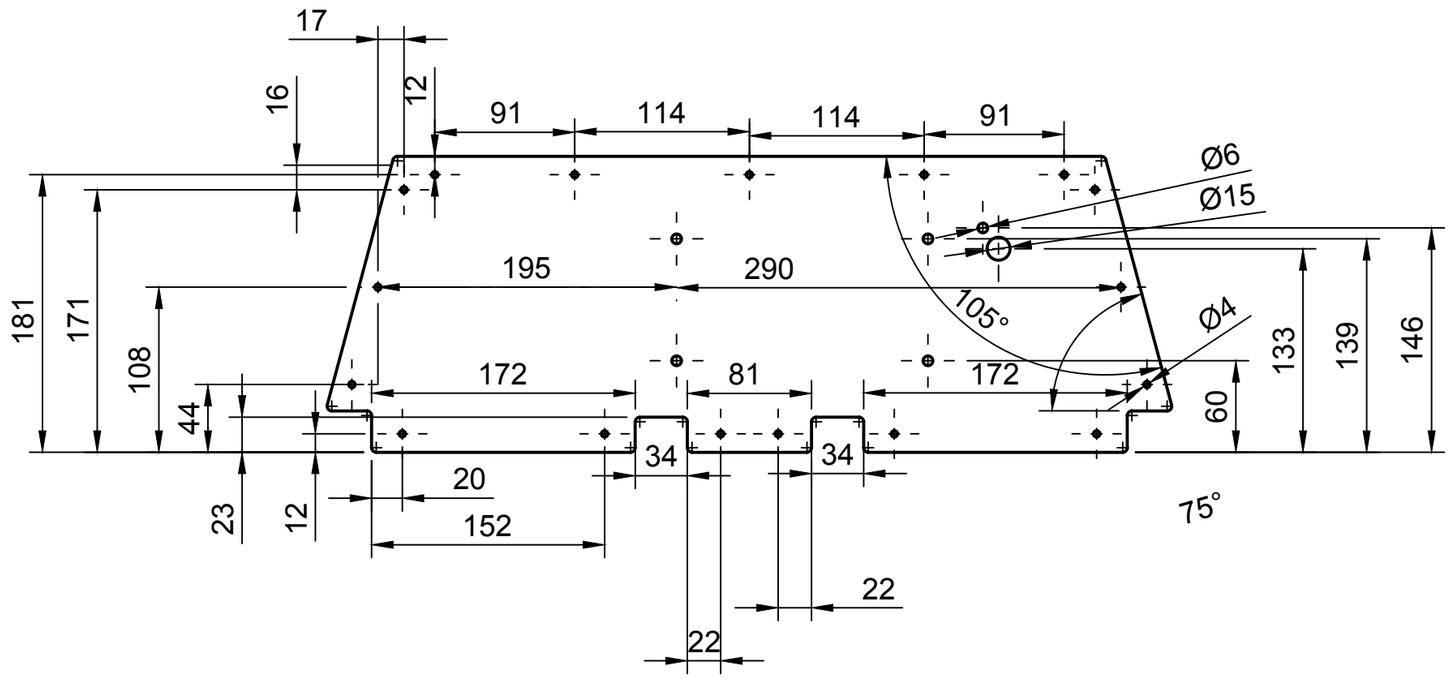

Dept.	Technical reference	Created by Cees Bak 07/10/2025	Approved by
		Document type	Document status
		Title REAR_BULKHEAD-Greenkart	DWG No.
		Rev. / Date of issue	Sheet 1/1