Scott®

TRUCK BODIES AND HOISTS

LL 2000

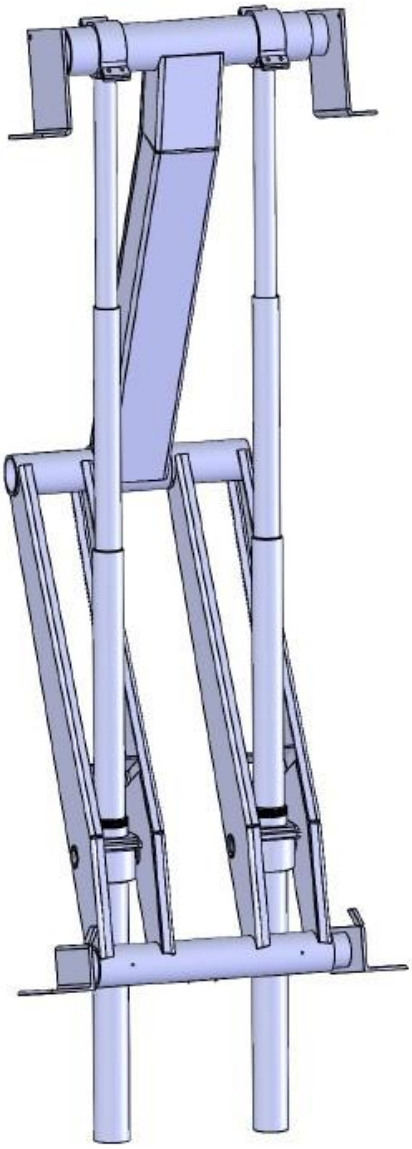

IMPORTANT INFORMATION

Congratulations on your recent purchase of a Scott Hoist! This manual is only a small part of Tafco's continuing effort to serve our customers and bring the best products possible to you. If you have any questions or experience any problems, contact your local Scott Hoist distributor. Your nearest distributor can be found at www.tafcoequip.com/dealer-locator

This manual has been prepared to provide the owner, installer and operator with the information required to properly install and operate this Scott Hoist. It is important that you, the owner, and the operator, read this manual prior to installing, operating, or performing any maintenance work on the unit.

For your convenience, we have provided the space for you to record this hoist, pump model, serial numbers, date of purchase, your dealership name and address.

OWNER NAME: _____

OWNER ADDRESS: _____

OWNER E-MAIL: _____

HOIST MODEL NUMBER: _____

HOIST SERIAL NUMBER: _____

PUMP MODEL NUMBER: _____

PUMP SERIAL NUMBER: _____

PURCHASE DATE: _____

INSTALLATION DATE: _____

DEALER NAME: _____

DEALER ADDRESS: _____

DEALER TELEPHONE NUMBER: _____

INDEX

Specifications And Serial Number Locations …… 4

Installation tips …….. 5

Capacity charts ……. 6

Installing the hinge ……... 6

Installing the hoist ……. 7

Installing the body …… 11

Attaching the upper mounts …… 12

Installing cross channel supports …… 13

Installing the safety prop …….. 13

Plumbing …….. 14
125-362 Bi-rotational pump ……. 14
140-562 reservoir with single valve and 136-362 bi-directional pump ……. 15
140-564 reservoir with double valve and 136-362 bi-directional pump …… 16

Hydraulic Controls …….. 17
130-016 push pull cable control …….. 17
120-284 and 120-285 toggle air kit ……. 17
125-381 toggle air shuttle ……. 18

Oil recommendations …… 19

Bleeding Hydraulic system ……. 19

Grease zerk locations …….. 20

Replacement parts …… 21

Cylinder Disassembly and seal replacement …… 22

Cylinder breakdown …….. 23

Warranty information …… 26

SPECIFICATIONS

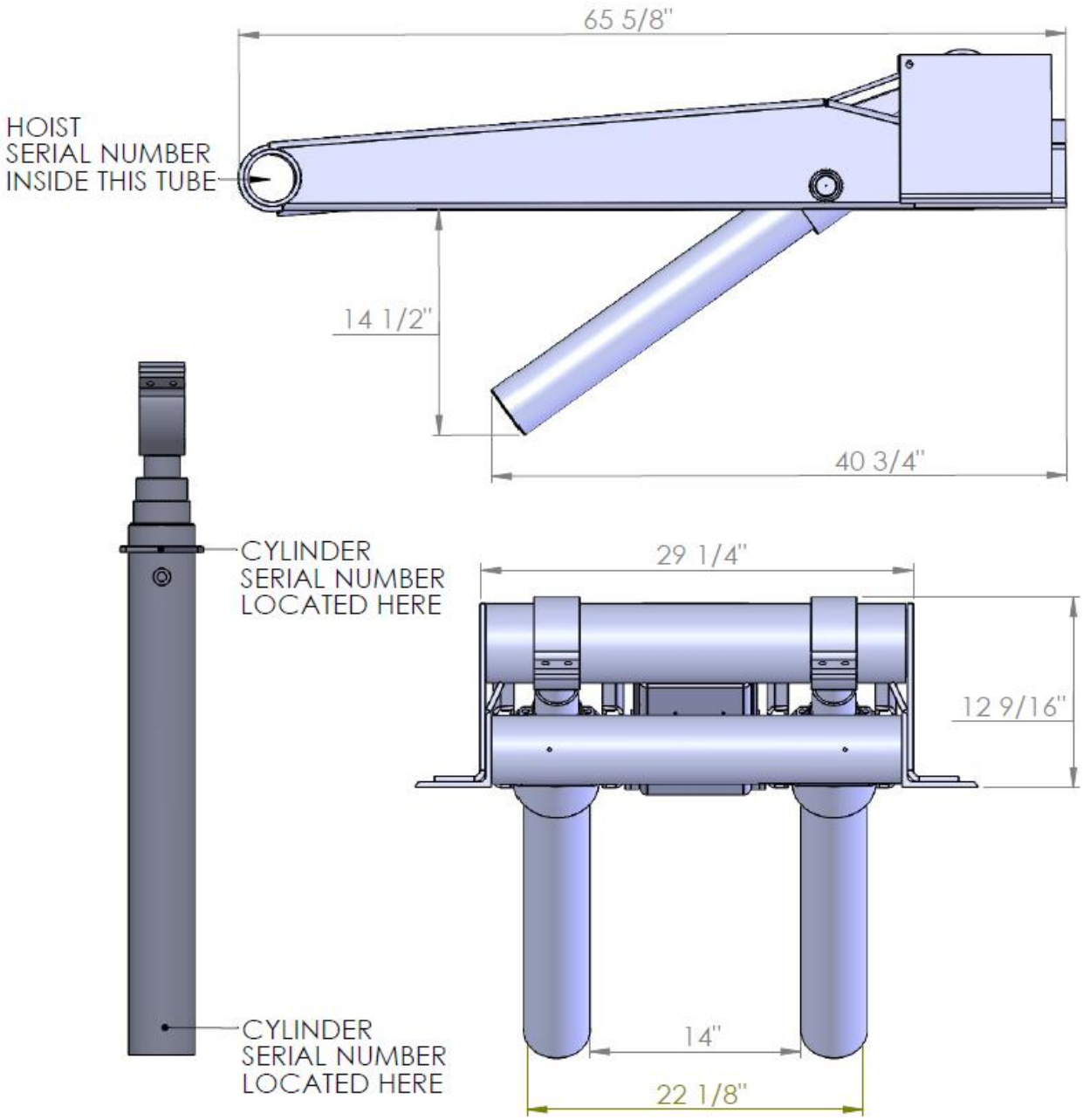

Class J Hoist

Recommended for bodies between 18’ and 24’

Twin telescopic cylinders with three moving stages 80 1/4” stroke.

LL2000 mounting height 12 9/16”

LL2000 Approximate Weight 800 lbs.

Gear pumps are set at 3600 PSI.

8 to 12 Gallons Per Minute recommended.

INSTALLATION TIPS

1: All work should be performed by qualified personnel.

2: When working under, on or around the hoist or body, always make sure that all raised components are mechanically supported and not held by the hydraulics alone.

3: Take time to become familiar with all the hoist parts, how they operate, and how they are to be mounted, before proceeding.

4: Never modify the hoist or any part in any way. Install all parts according to this manual.

5: All non-subframe hoists can be installed scissor hinge forward or back for versatility. This has no effect on lift or mounting length.

NOTE: All diagrams in this manual are pictured scissor hinge back.

6: Using the hoist calculator at www.tafcoequip.com/calculator or the mounting chart on page 4 choose the proper hoist for the body size and lift desired.

7: When determining where hoist components will be positioned, pay attention to truck exhaust, drive line components, fuel tanks, break lines, fuel lines, wires and crossmembers.

8: Tafco Equipment Company does NOT recommend notching out or removal of body crossmembers for hoist installation.

9: These instructions are for a typical installation. If your requirements are different due to truck or body configuration, it is the installer's responsibility to ensure proper installation and operation of the hoist.

10: Make sure all manuals are forwarded to the end user.

CAPACITY CHART

LL 2000 MOUNTING LENGTHS							
30	35	40	45	50	55	60	DEGREES
188"	163"	143"	128"	116"	106"	97"	
CAPACITY CHART							
BOX LENGTH	CAB TO AXLE	OVER HANG	DEGREES 40	DEGREES 45	DEGREES 50	DEGREES 55	
18	156	18	26.4	23.7	21.5	19.8	LIFT IN TONS
20	168	30	26.4	23.7	21.5	19.8	LIFT IN TONS
22	177	45	27.4	24.5	22.3	20.5	LIFT IN TONS
22	192	30	23.3	20.9	19	17.5	LIFT IN TONS
24	204	42	23.3	20.9	19	17.5	LIFT IN TONS
24	210	36	22	19.8	18	16.5	LIFT IN TONS

NOTES

Overhang is based on 44” from centerline of tail hinge to the center of the truck axle with between two and four inches between the cab and body.

The chart does not cover all mounting conditions. For more information go to www.tafcoequip.com/calculator and use the hoist calculator or contact Tafco at 800-328-3189.

The capacities are calculated at 3600 psi.

The capacities given include body weight and assume weight is spread evenly across entire body.

INSTALLING THE HINGE

Mount the hinge assembly as close to the rear spring hanger as possible. This distance should be 1 to 6 inches. See below.

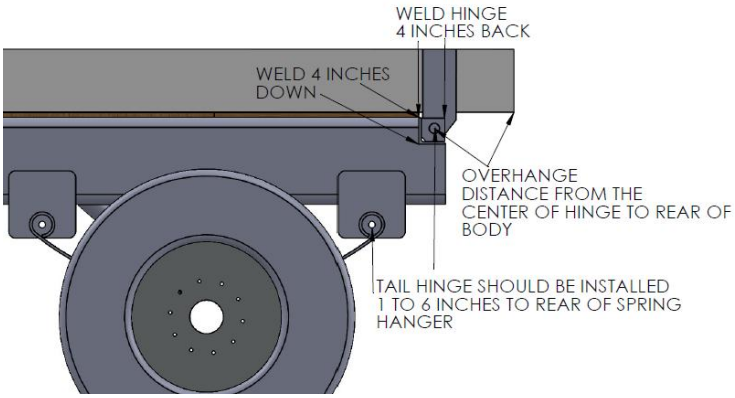

Cut out the area for the hinge to sit down inside the frame. The top of the hinge should be flush with the top of the truck frame. Cut the frame 4 inches down and 4 inches back. After the frame has been cut make sure the hinge is square with the truck frame, then weld it in place. As shown above.

INSTALLING THE HOIST

1: Determine the degree of lift desired. NOTE: Tafco does not recommend lifting over 60 degrees.

2: Use the capacity chart on page 6 or the hoist calculator at www.tafcoequip.com/calculator to determine the proper mounting length for your desired angle of lift.

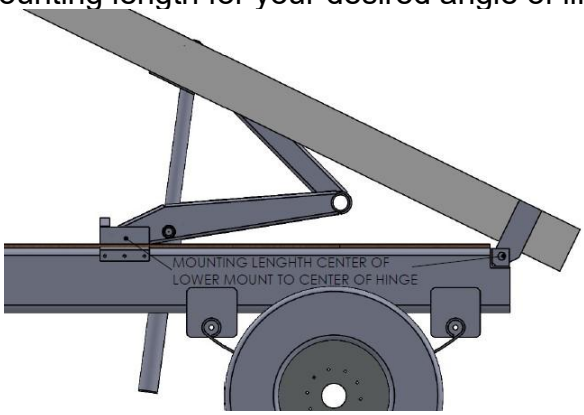

3: Set the hoist in the area chosen and leave it loose.

4: When the hoist is in the down position, the bottom of the lower arms should be parallel with the frame of the truck and must be supported on the scissor hinge end. If your final location does not have support in the proper location install support at this time. Shown below.

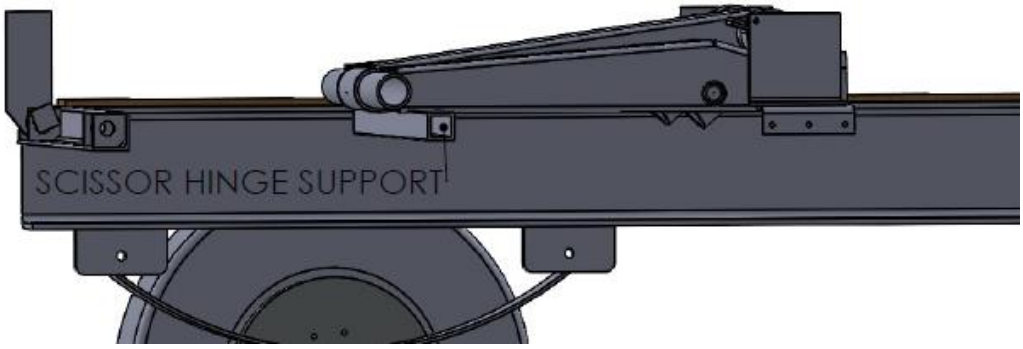

5: Raise the tongue and upper tube to the point that the cylinders can be installed. Secure cylinders to the castings with supplied bolts. Orientate the cylinder bottom caps as shown below.

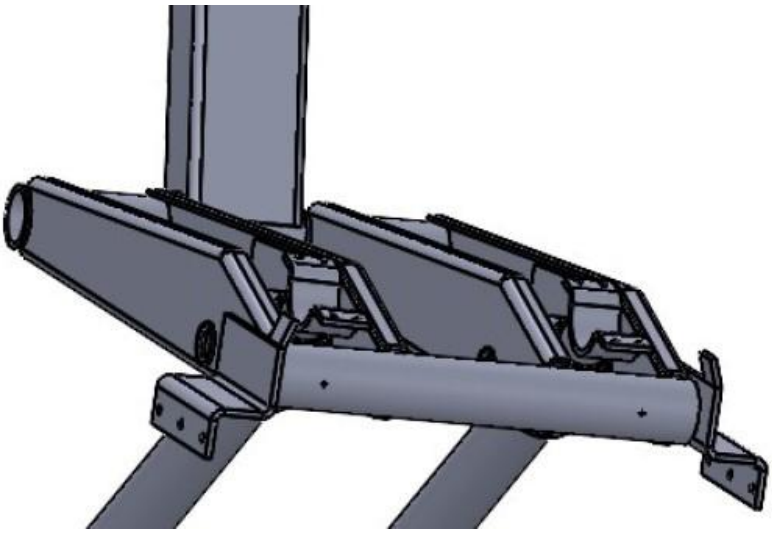

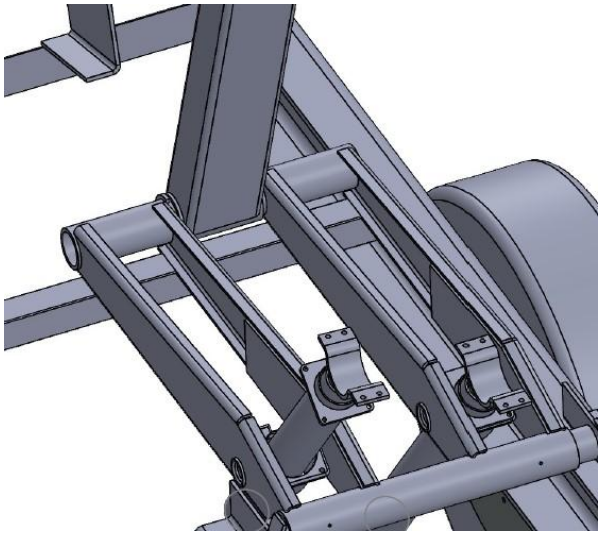

6: Lower the tongue and upper tube into the cylinder caps and secure the top cap in place with supplied bolts. As shown below.

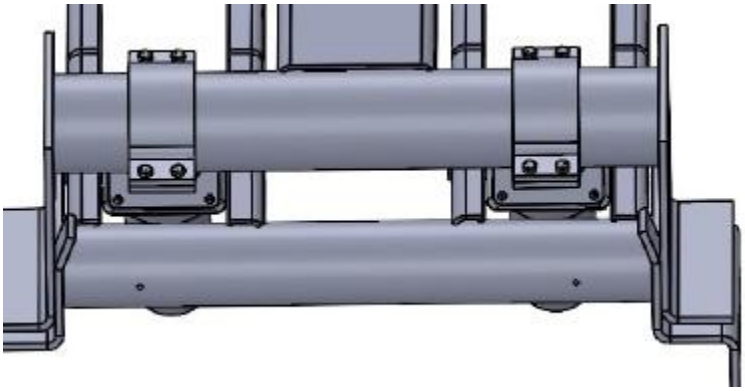

7: You can now move the hoist around so that the hoist clears all obstructions that may interfere with operation.

NOTE: moving hoist towards the cab will increase lift and decrease dump angle. Moving it away from the cab will have the opposite effect.

Note: Make sure to consider the cyl swing shown below. Cylinders coming into contact with frames or crossmembers can bend cylinders and will void warranty.

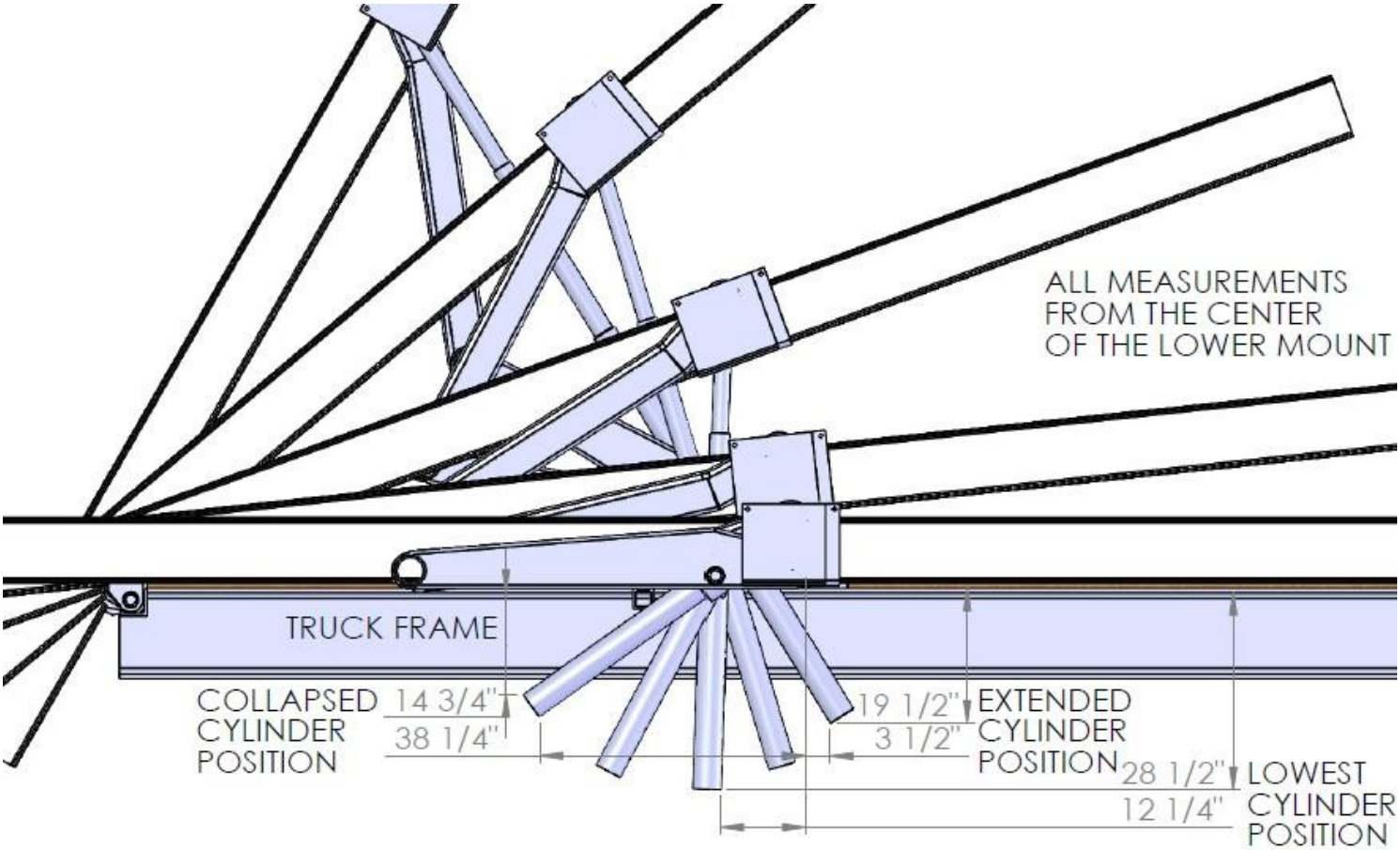

BI

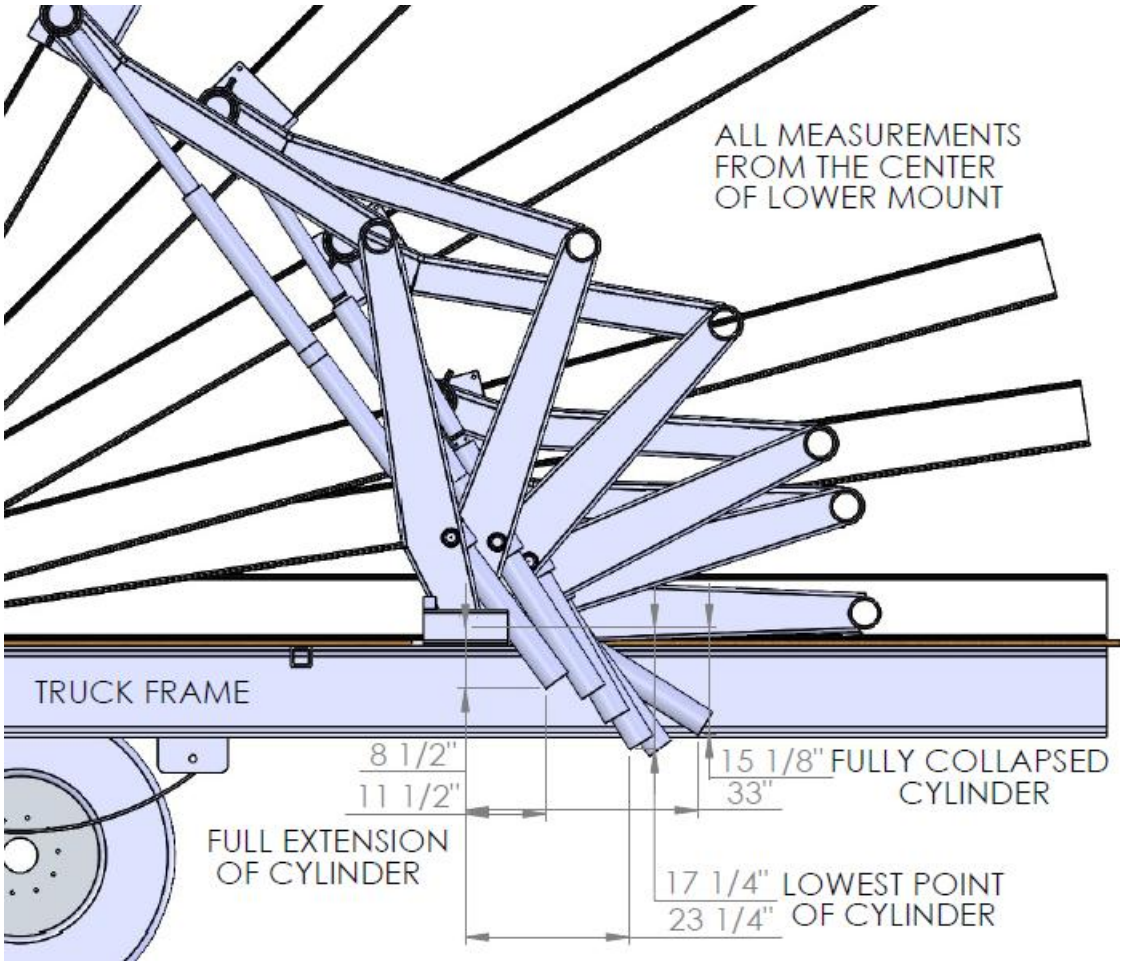

8: Center and square the hoist in the truck frame.

9: Center and set the lower mounts to a width that will accept the body long sills when the body is installed.

10: Set the bolting angles, push them into the truck frame making sure they sit flat on both the bottom of the lower mount and the side of the truck frame. It may be necessary to install shims, or otherwise modify the mount, to accomplish this.

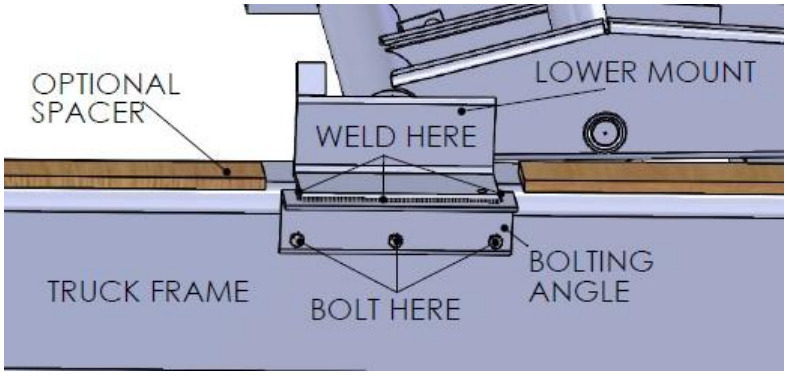

11: Making sure not to damage any lines or hoses on the truck, drill three (3), 1/2” inch holes in the truck frame. Secure the bolting angles to the truck frame using ½” x 1 ½” bolts. Do this on both sides of the hoist.

12: Plumb the hydraulics. See PLUMBING page 14.

13: If installing 140-562 or 141-564 valve and reservoir with bi-rotational gear pumps refer to HYDRAULIC CONTROLS page 17.

14: Install the body. See the INSTALLING BODY page 11.

15: Attach the upper mounts. See the ATTACHING UPPER MOUNTS page 12.

16: Bleed the hydraulic system. See BLEEDING THE HYDRAULICS page 19.

17: Raise the hoist and body to the full operating angle. Make sure the hoist operates freely and smoothly. All hoses and wires should not interfere with truck operation.

18: Install cross-channel support. See INSTALLING CROSS CHANNEL SUPPORT page 13.

19: Install the safety prop. See INSTALLING SAFETY PROP page 13.

20: Grease the hoist See GREASE ZERK LOCATIONS page 19.

21: Check the hydraulic reservoir oil level.

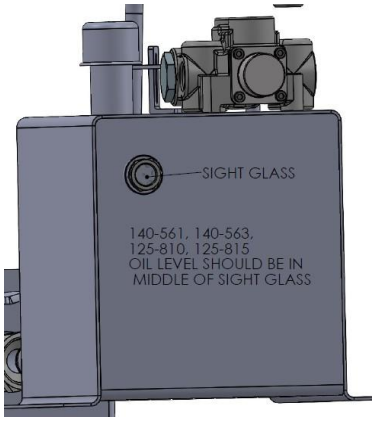

22: Your hoist installation is complete.

INSTALLING BODY

1: When in the down position the body needs to contact as much of the truck frame as possible. It will be necessary to install a 2 x 4 spacer between the long sills of the body and the truck frame. This will take up the space created by the upper and lower mounts.

2: Carefully set the body on the truck paying attention to the cab to body clearance. There should be a minimum of 2” between the body and cab, 3 ½ inches is recommended.

3: Make sure the body is square and straight with the frame of the truck.

4: A spacer must be fabricated out of channel 1” smaller than the long sills of the body and 12“ long. Weld as shown below.

5: Attach the supplied vertical plates to the body long sills, see figures below.

BOLTED OPTION

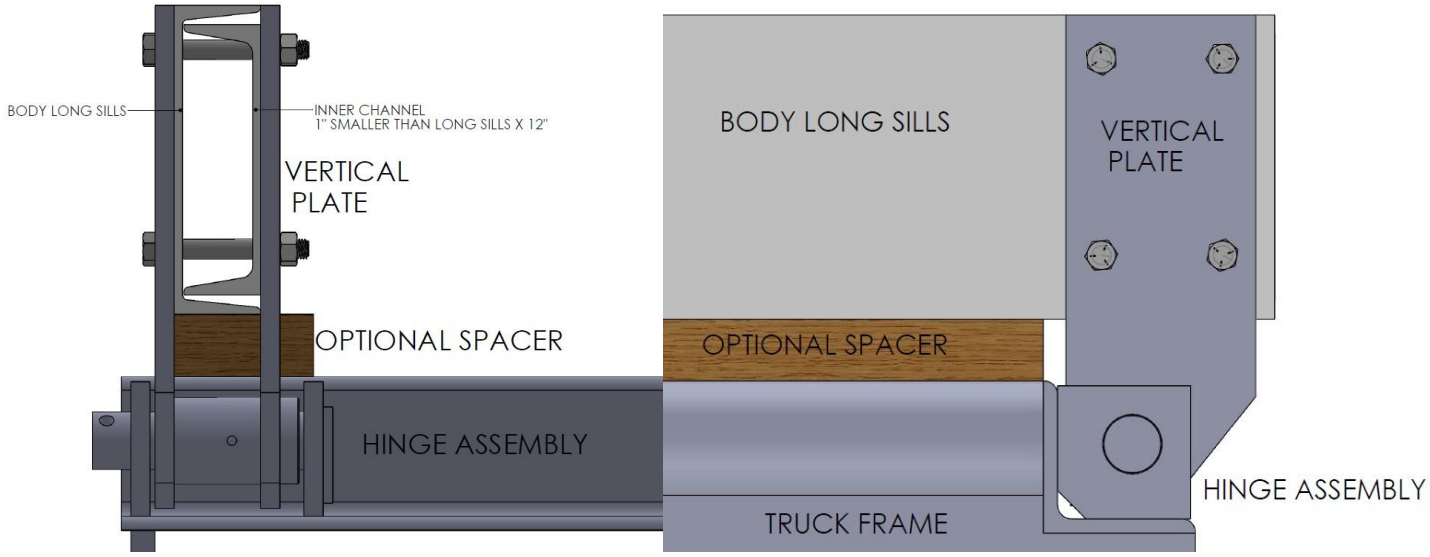

WELDED OPTON

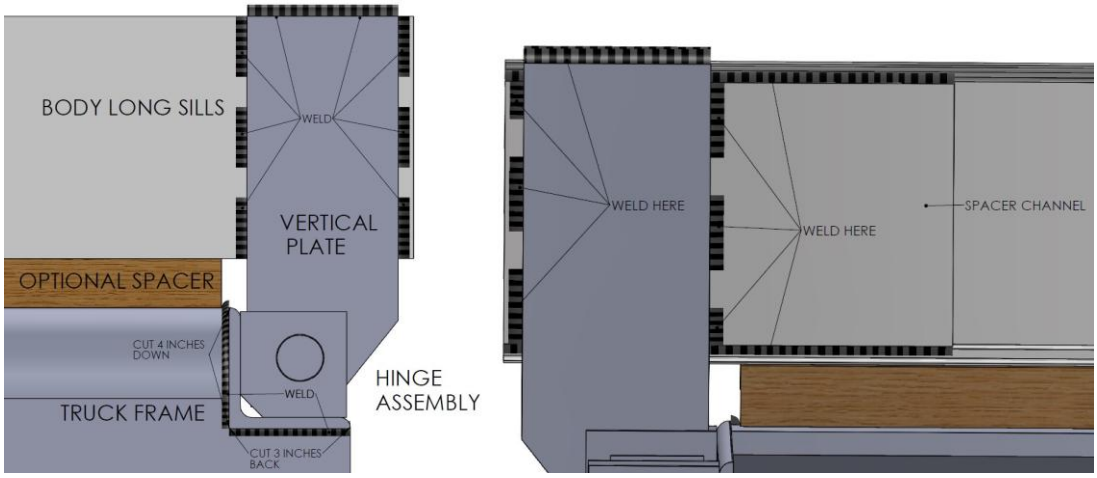

ATTACHING UPPER MOUNTS

1: Lower the hoist and body to the full down position.

2: Slide the upper mounts outward to meet the long sills of the body. If the upper mount does not fit tight against the inside of the long sills, it will be necessary to weld in a 3/8” spacer between the body long sills and the lower part of the upper mount as shown below.

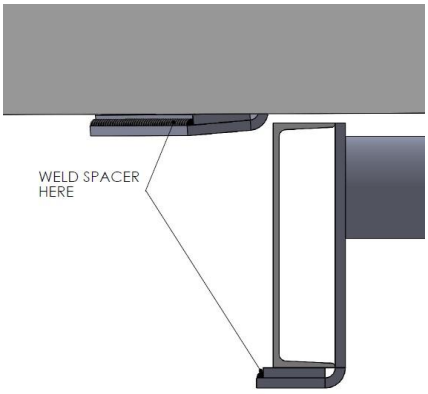

3: Attach the upper mounts as shown in one of the options below.

BOLTED OPTION

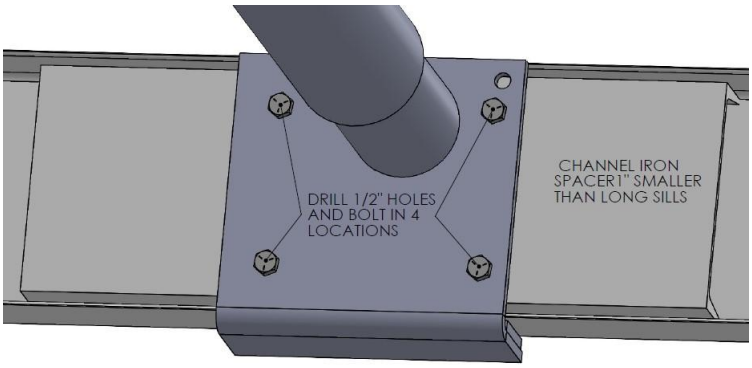

WELDED OPTION

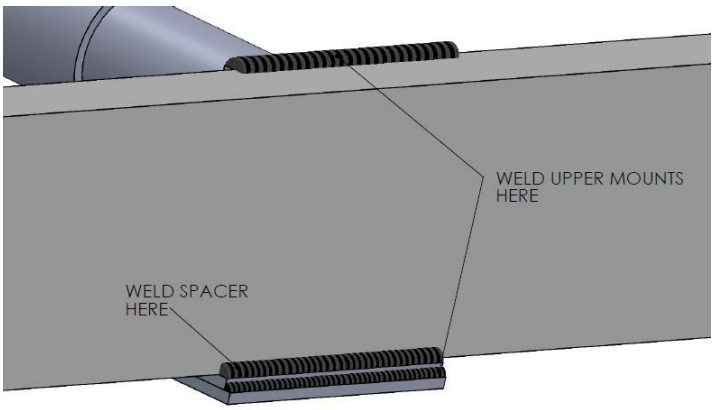

INSTALLING CROSS CHANNEL SUPPORT

Tafco recommends installing at least 4 cross channel supports per body. Install cross channels as close as possible to: front of the hoist, rear of the hoist, front of the body, the rear of the body. Installing cross channel support adds strength and prevents twisting when lifting uneven loads.

If not supplied, make the cross-channel braces by cutting a channel iron that is 1” smaller than the long sills of the body. Failure to install cross channel bracing may void warranty on body and hoist.

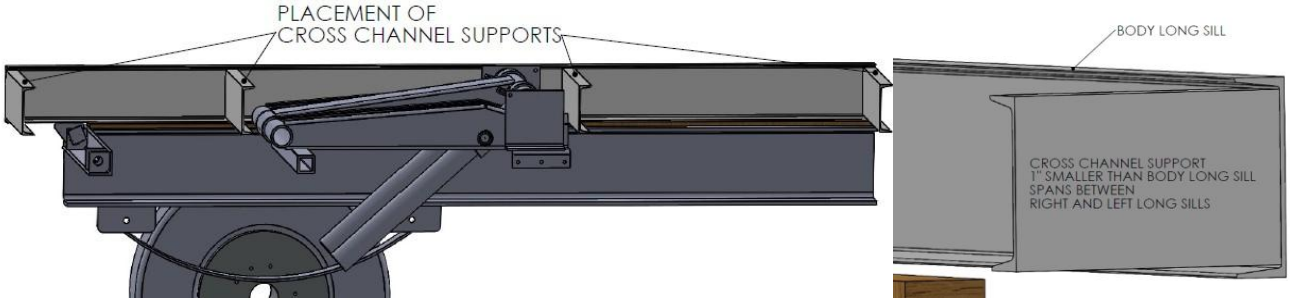

INSTALLING SAFETY PROP

1: Raise the empty body approximately halfway up. Block body up to that it is safe to work under body.

2: Locate and weld the safety prop mounting plate so that the bottom of the plate is flush with the bottom of the body long sill, with the pin is down, and the plate is as close to the front side of the gusset as possible, and the safety prop is as close as possible to 90 degrees with the truck frame. See below.

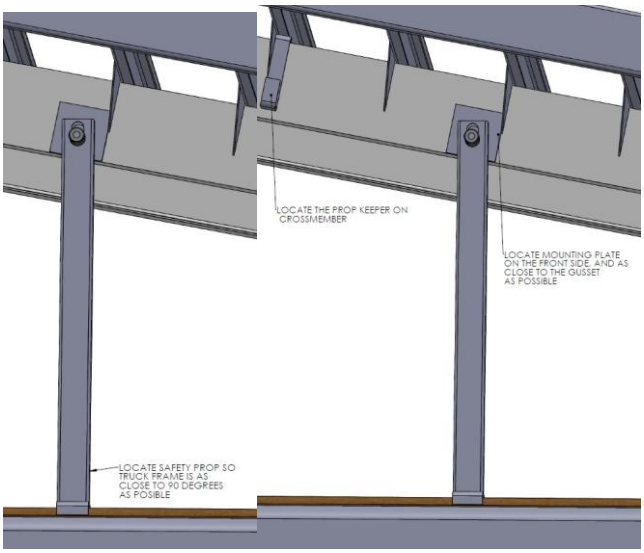

3: On a crossmember bolt of weld the safety prop keeper approximately 24 inches away from the safety prop mounting plate. Make sure that the keeper is positioned so that the safety prop can be stored in it when not in use. Shown above.

4: Apply “DANGER” Safety decals on both bodies long beams.

PLUMBING

There are several options for the hydraulic system. When mounting and plumbing the system it is the installer's responsibility to ensure that all components, hoses, and electrical wires are secure, and there is adequate clearance for all truck components to ensure safe operation of both truck and hoist. Make sure to use quality pipe sealant on all NPT fittings and plumb as shown below.

125-362 BI-ROTATIONAL PUMP PLUMBING

INSTALLATION FOR CLOCKWISE ROTATING PTO

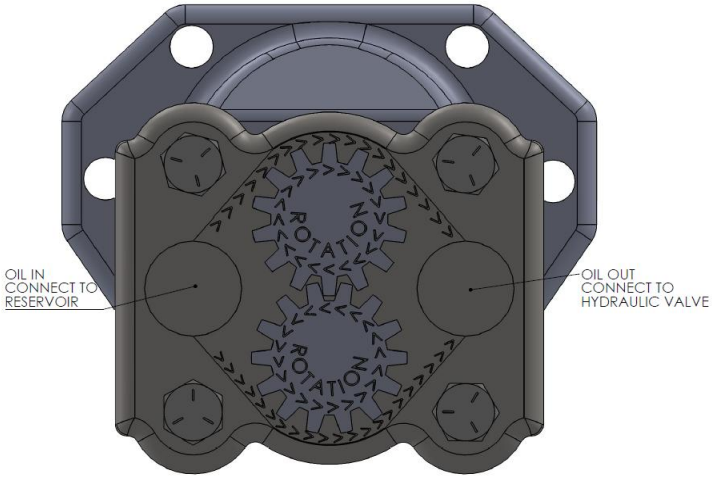

INSTALLATION FOR COUNTER CLOCKWISE PTO

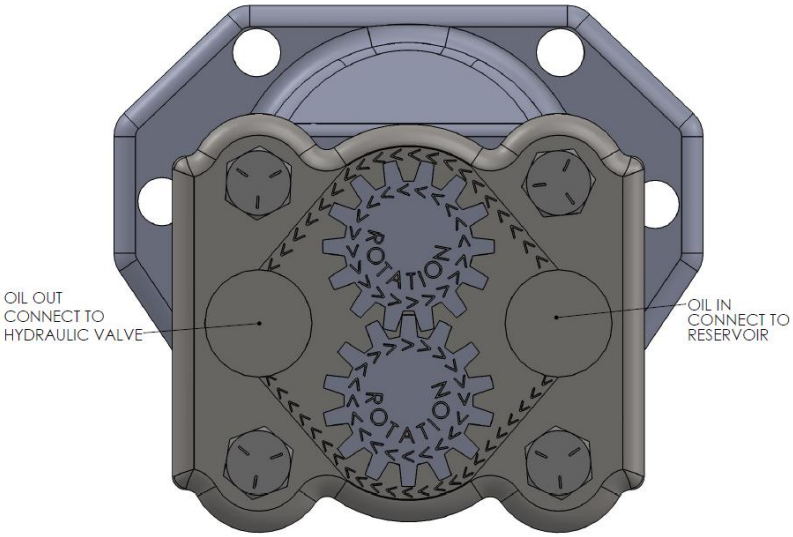

7/8 9 TOOTH SHAFT.

SAE B FLANGE MOUNTING.

2.46 WIDE GEERS.

ROTATION SPEED FROM 400 TO 2700 RPM.

140-562 Single valve reservoir with 125-362 bi-rotational pump.

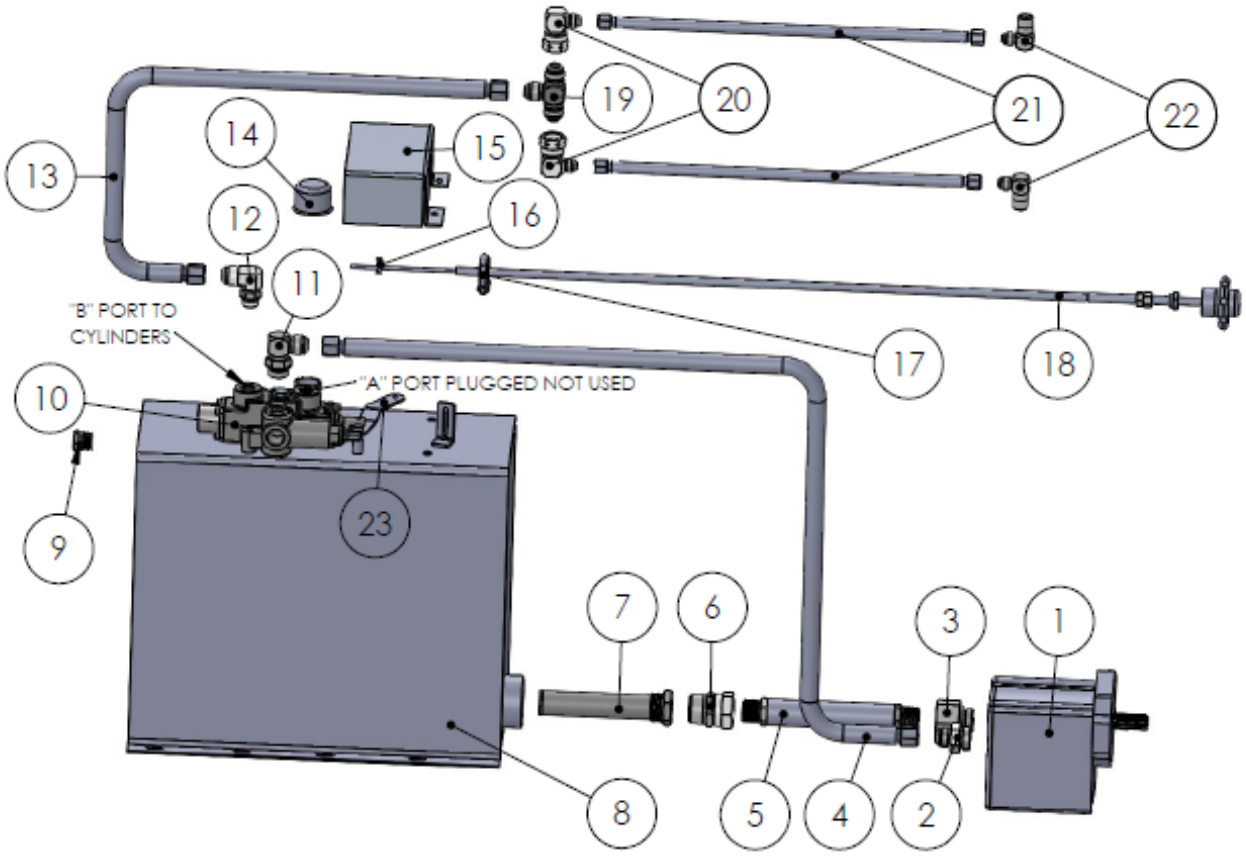

ALL PARTS FOR REFERENCE ONLY SIZE AND POSITION NOT TO SCALE

ITEM NUMBER	PART NUMBER	DISCRIPTION
1	125-362	BI-ROTATIONAL PUMP
2	130-352	6400-12-16 FITTING
3	125-241	6405-16-20 FITTING
4		CUSTOMER SUPPLIED PRESSURE 3/4" HOSE
5		CUSTOMER SUPPLIED 1-1/4" SUCTION HOSE
6	125-648	1404-20-20 FITTING
7	125-240	1-1/4" NPT 150 MICRON STRAINER
8	125-617	50 QUART RESERVOIR
9	125-819	3/4" NPT SIGHT GLASS
10	130-342	VALVE 3600 PSI UP GRAVITY DOWN
11	130-349	6801-12-10 FITTING
12	130-348	6801-12-12 FITTING
13	130-345	3/4" X 84" HOSE
14	125-048	CAP / BREATHER
15	106-657	VALVE GAURD
16	125-778	WIRE CLAMP
17	125-779	CABLE CLAMP
18	130-016	15' PUSH PULL CABLE W/ CENTER DETENT
19	130-351	2603-12-12-12 FITTING
20	130-350	6500-08-12 FITTING
21	130-344	1/2" X 40" HOSE
22	130-347	6801-08-08 FITTING
23	106-655	VALVE LEVER

140-564 double valve reservoir with 125-362 bi-rotational pump.

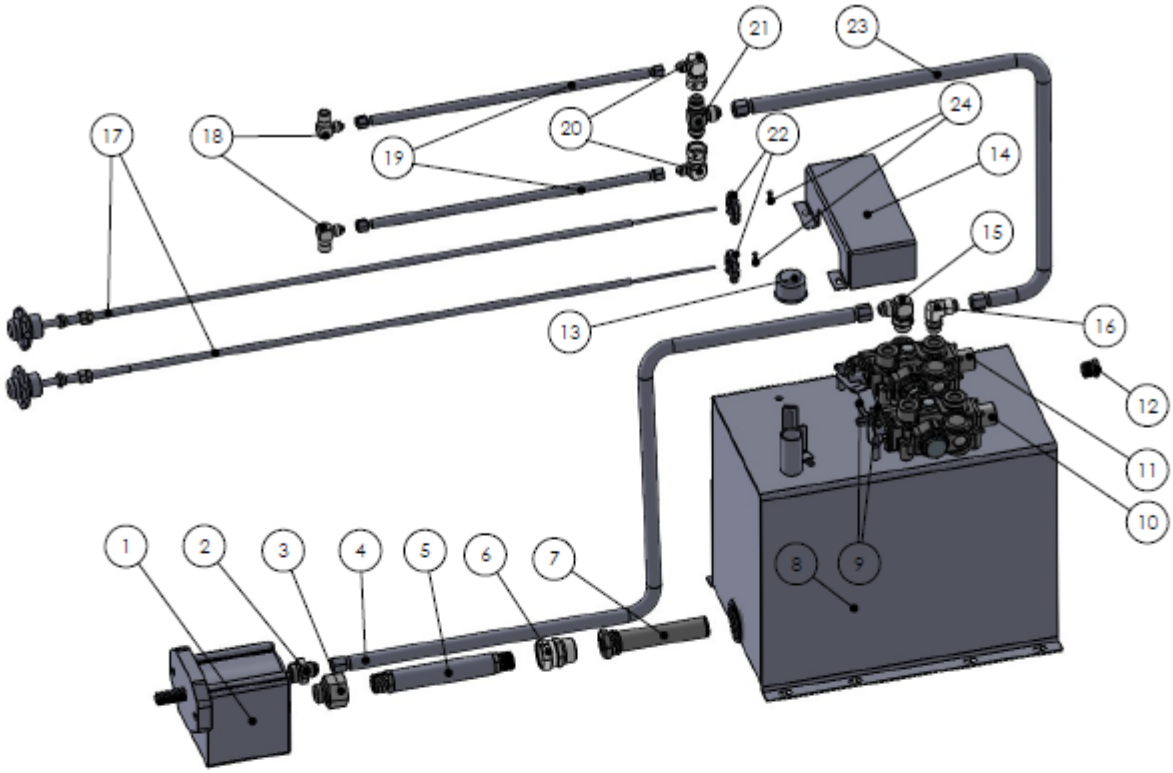

ALL PARTS FOR REFERENCE ONLY SIZE AND POSITION NOT TO SCALE
ALL HOSES AND FITTINGS NOT PICTURED ARE TO BE SUPPLIED BY CUSTOMER

ITEM NUMBER	PART NUMBER	DISCRIPTION
1	125-362	BI-ROTATIONAL PUMP
2	130-352	6400-12-16 FITTING
3	125-241	6405-16-20 FITTING
4	NA.	CUSTOMER SUPPLIED 1/2" PRESSURE HOSE
5	NA.	CUSTOMER SUPPLIED 1-1/4" SUCTION HOSE
6	125-648	1404-20-20 FITTING
7	125-240	150 MICRON STRAINER
8	126-618	60 QUART DOUBLE VALVE RESERVOIR
9	106-655	VALVE LEVER
10	130-341	1500 PSI UP ADN 1500 PSI DOWN VALVE
11	130-342	3600 PSI UP ADN GRAVITY DOWN VALVE
12	125-819	SIGHT GLASS
13	125-048	BREATHER / CAP
14	106-658	VALVE COVER
15	130-348	6801-12-12 FITTING
16	130-349	6801-12-10 FITTING
17	130-016	15' PUSH PULL CABLE WITH CENTER DETENT
18	130-346	2501-08-08 FITTING
19	130-344	1/2" X 40" HOSE
20	130-350	6500-08-12 FITTING
21	130-351	2603-12-12-12 FITTING
22	125-779	CABLE CLAMP
23	130-345	3/4" X 84" HOSE
24	125-778	CLAMP WIRE

HYDRAULIC CONTROLS

Installation 130-016 push pull cable controls

Mount cable handle in cab in a convenient location. Route cable to the reservoir avoiding kinks and sharp bends. When routed properly, the cable should move freely. The 125-779 cable clamp should be tightened enough to hold the cable in place but not so tight that it restricts the inner cable from moving freely.

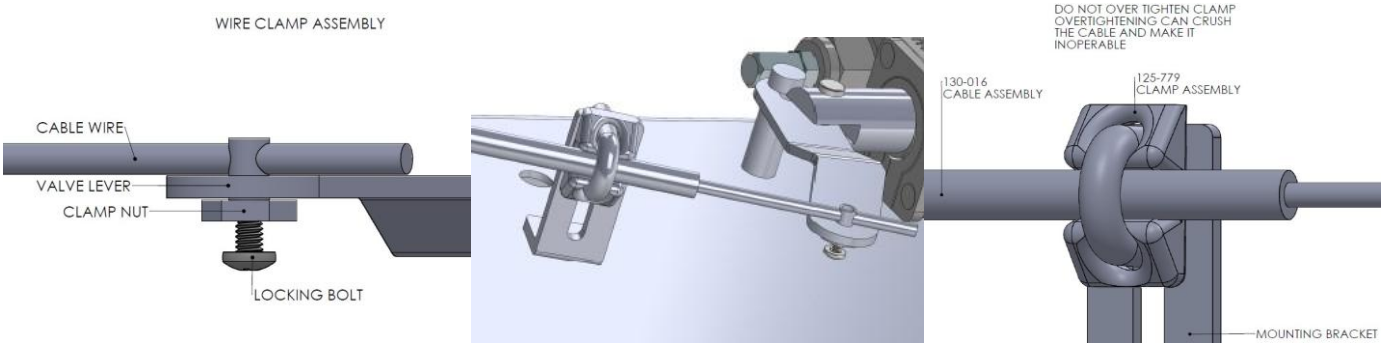

INSTALLATION TOGGLE AIR KIT

120-284 and 120-285

Air toggle valve kit for 140-562 single valve reservoir plumb as shown below.
Air toggle valve kit for 140-564 double valve reservoir plumb as shown below twice.

1: Lower the hoist and shut the engine off. Make sure that the hydraulic system is not charged with any residual pressure by cycling the spool in and out several times.
2: Clean all debris and foreign particles from the valve and the valve face.
3: Remove and discard the roll pin, handle, clamp, and cable. Remove the 4 bolts holding the rear cover and discard the bolts and cover As shown below.

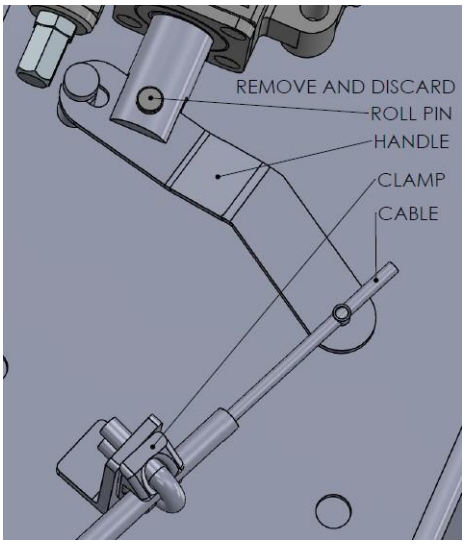

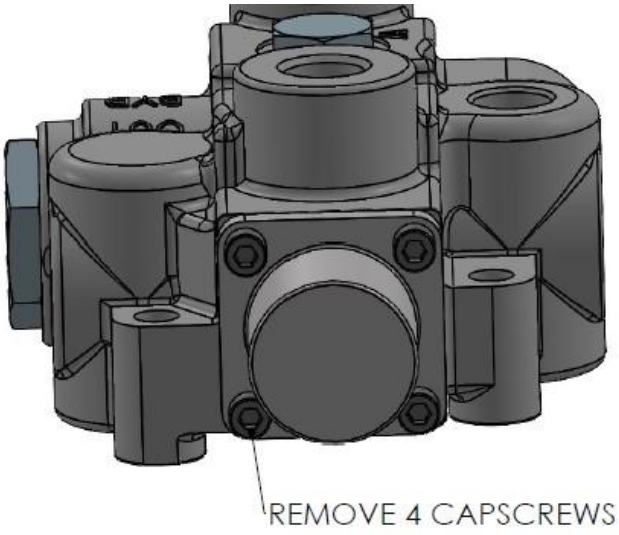

4: Remove the center bolt holding the spring cup and spring from the spool. Discard the spring cup, spring, spacer washer, and the square spacer.
5: The air cylinder does not need to be disassembled to be installed.
6: Apply blue Lock Tite thread locker to the threads inside the valve spool.
7: Insert a 3/16 hex wrench in the down hole on the air cylinder and tighten the spool to the air cylinder. Note you must complete step 7 before step 8.
8: Install and tighten the 4 hex bolts that hold the air cylinder to the valve.
9: Check for proper alignment by rotating the spool from the opposite end. It should rotate freely.
10: Install toggle in desired location and plumb air lines as shown below.

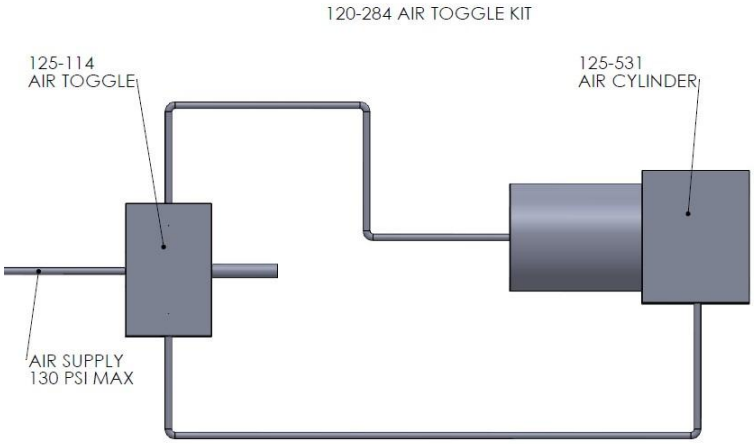

AIR SHUTTLE INSTALLATION 125-381

Sometimes it is desirable to have air controls in the cab and at the rear of the body. This can be accomplished with a 125-381 air shuttle valve. Plumb the valve as below.

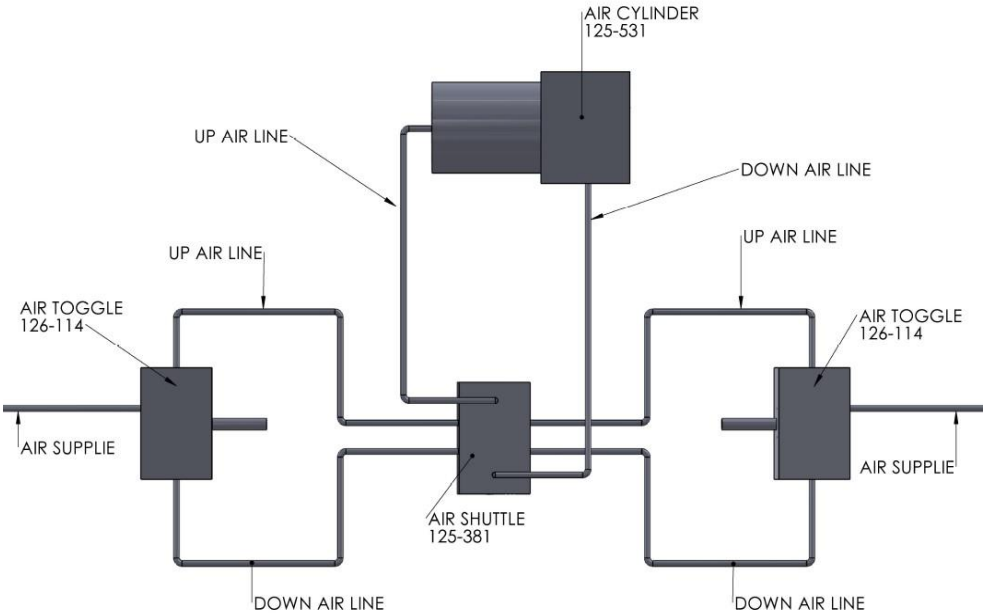

OIL RECOMENDATIONS

Tafco Equipment Company recommends using premium hydraulic oil to ensure optimum performance and system life. Select oil that has anti-wear properties, rust inhibitors, foam inhibitors, and good stability. Examples include Chevron Rando HDZ, Mobile DTE 10, DTE 20. Automotive automatic transmission fluid (Dextron III) is acceptable under normal conditions. In extreme prolonged cold weather conditions Valvoline Royco, or Mobile Aero HF may be used.

BLEEDING THE HYDRAULICS

The bleed screws are located on the top end of each cylinder just below the cap see below.

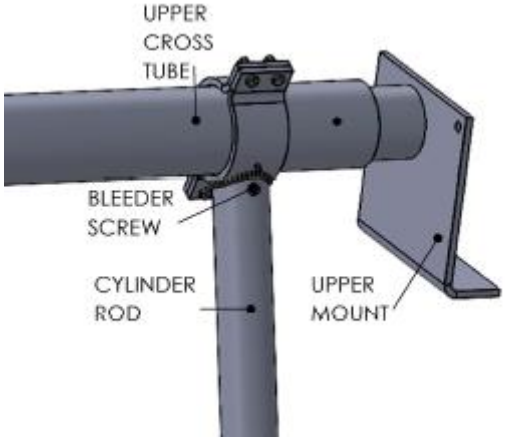

Raise hoist about ½ way. Lower safety prop. Lower the body leaving about ½ to 1” clearance between prop and truck long sills.

Slowly open bleed screw on the first cylinders releasing any air from the cylinder. When oil starts to flow close bleed screw.

Slowly open bleed screw on the second cylinder releasing any air from the cylinder. When oil starts to flow close bleed screw.

The body will lower when the bleed screws are opened. If the body lowers far enough to rest on the safety prop repeat the process.

Raise the hoist place safety prop in stowed position. Test for proper operation. It may be necessary to repeat the bleeding prosses to get all of the air out of the system.

GREASE ZERK LOCATIONS

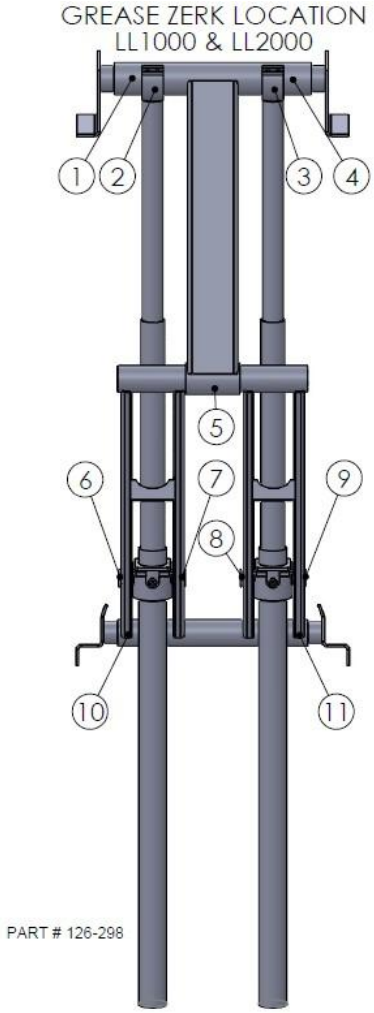

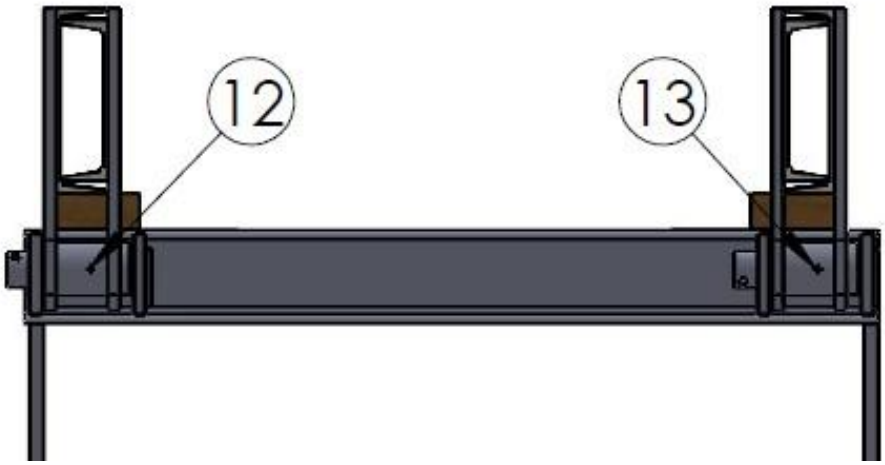

REPLACEMENT PARTS

LL2000

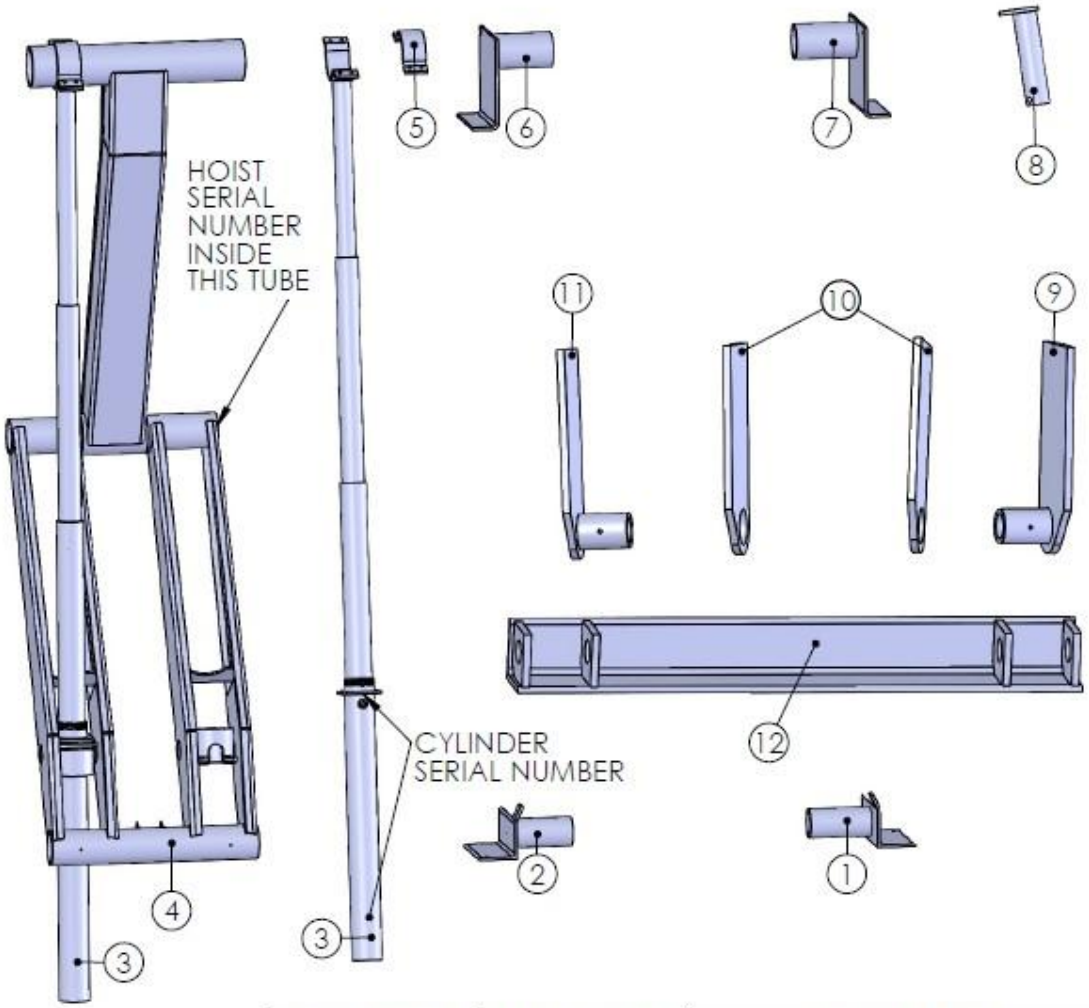

ITEM NUMBER	PART NUMBER	DISCRIPTION
1	140-502	LOWER LEFT MOUNT
2	140-503	LOWER RIGHT MOUNT
3	130-057	CYLINDER LESS TOP CAP
	130-053	CYLINDER WITH TOP CAP
4	140-500	LL 2000 MAIN FRAME
5	110-348	TOP CAP
6	140-112	RIGHT UPPER MOUNT
7	140-501	LEFT UPPER MOUNT
8	140-507	HINGE PIN
9	140-505	RIGHT VERTICAL PLATE W/ BUSHING
10	110-234	VERTICAL PLATES
11	140-504	LEFT VERTICAL PLATE W/ BUSHING
12	140-506	HINGE
	140-525	CONTAINS 8,9,10,11,12

CYLINDER DISASSEMBLY TWO CYLINDER HOISTS

1: Clamp the cylinder or stage to be disassembled in a device that will prevent rotation. NOTE: Take care that scarring, or distortion of the tube does not occur due to clamping.

2: With a spanner wrench turn the gland nut counterclockwise to remove it from the lower section. NOTE: Heat may be required to loosen gland nuts. Only apply enough heat to melt lock tight and or rusted gland nut. Excess heat may distort the tube.

3: Remove inner tube from the outer tube.

4: Remove everything from the inner tube noting where all seals, wear rings, and lock rings are located and their orientation. NOTE: Be careful not to damage the wear rings or lock rings when removing them. They are NO LONGER AVAILABLE. If not reusable the cylinder must be replaced.

5: Remove the gland nut from the outer tube.

6: Remove all seals from the inside of the glands nut noting their orientation and location.

7: Inspect all surfaces for scratches, scaring, and distortion. NOTE: If you can catch a fingernail in a scratch, it will tear the new seals on installation causing a leak.

8: Install seals into the gland nut the same way they came out in step 6. Lubricate seals with a small amount of grease. Clean all threads with isopropyl alcohol. Reinstall the gland nut onto inner tube.

9: Install all seals, wear rings, and lock rings onto the inner tube. In the same location and orientation as removed in step 4. Lubricate seals with a small amount of grease and install the inner tube into the outer tube.

10: Clean the threads on the outer tube with isopropyl alcohol and allow it to dry. Apply red lock tight to the threads. Tighten the gland nut. Allow thread locker to dry.

NOTE: Due to the fact that a seal covers several cylinders you may not use all seals in your application.

Repeat all steps for every stage of the cylinder.

Prince AE-149 Cylinder

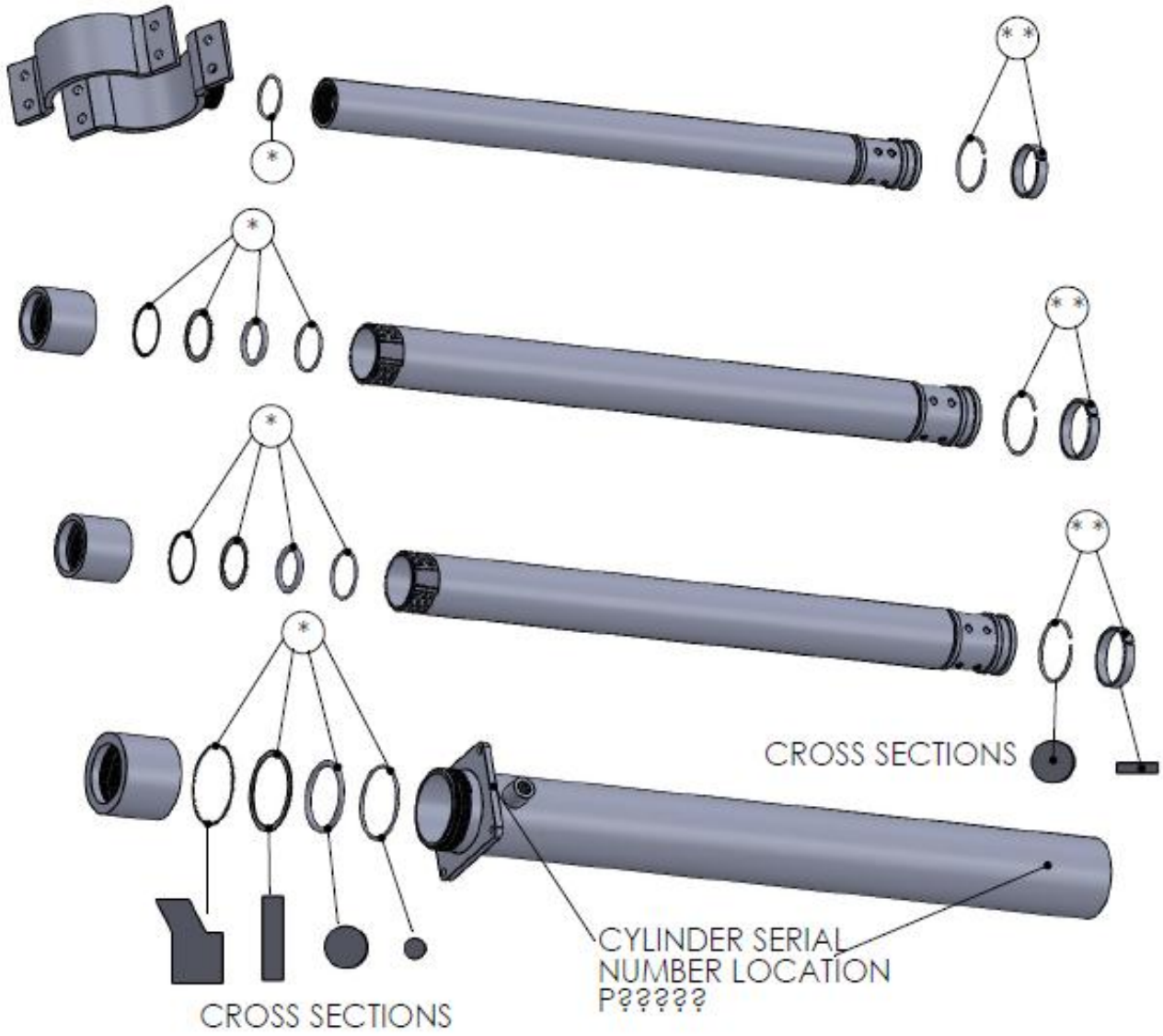

* CONTAINED IN PRINCE UPPER SEAL KIT 130-250 NO LONGER AVAILABLE

** CONTAINED IN PRINCE LOWER SEAL KIT 130-251

ALL PARTS OTHER PARTS NO LONGER AVAILABLE

PRINCE AE-149
2/1991 THRU 7/04 HOIST SER# 14210 AND DOWN
CYLINDER NUMBER P15860 AND DOWN

Prince BE-447 Cylinder

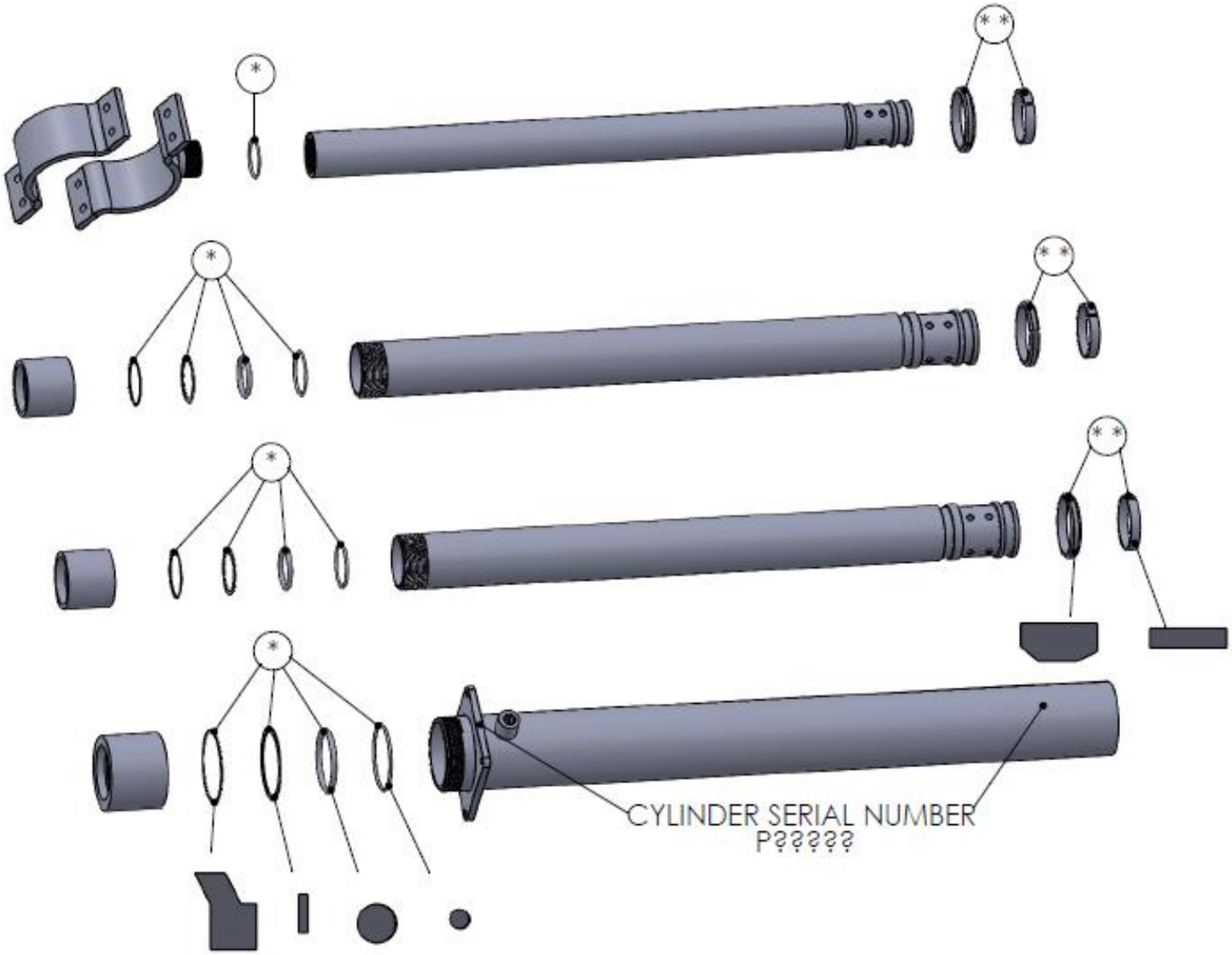

* CONTAINED IN PRINCE UPPER SEAL KIT 130-250 NO LONGER AVAILABLE

** CONTAINED IN PRINCE LOWER KIT 130-251

ALL PARTS NOT LABELED NO LONGER AVAILABLE

PRINCE BE-447
7/04 - 7/1/09 HOIST SER# 14729 THROUGH 22481
CYL# P16207 THROUGH P26756

Rosenboom Cylinder

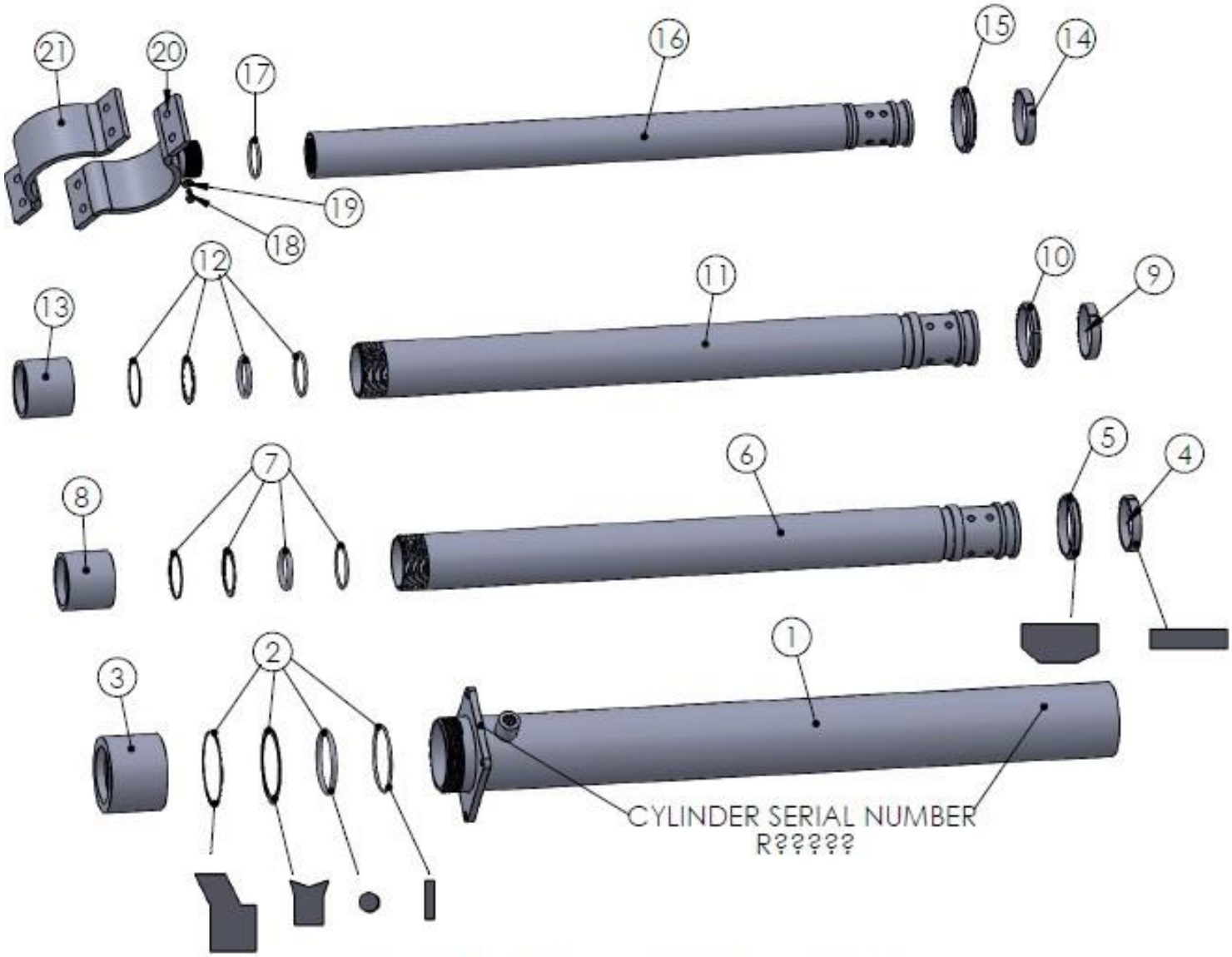

SEAL KIT 130-146 CONTAINS 2, 7, 12, 17.

ALL OTHER PARTS CALL FOR AVAILABILITY

ROSENBOOM
7/1/09 THRU PRESENT
HOIST # 22482 AND UP **CYL# R26757 AND UP**

HOIST WARRANTY

TAFCO EQUIPMENT COMPANY (TAFCO) WARRANTIES EACH HOIST TO BE FREE FROM DEFECTS IN MATERIAL AND WORKMANSHIP FOR A PERIOD OF 10 YEAR FROM DATE OF INSTALLATION.

TAFCO ACCEPTS NO RESPONSIBILITY FOR WARRANTY ON PUMPS, CYLINDERS, VALVES OR ANY OTHER PART NOT MANUFACTURED BY TAFCO. THEY ARE SUBJECT TO MANUFACTURER WARRANTY. TAFCO EQUIPMENT COMPANY WILL ASSIST OUR DEALERS IN OBTAINING WARRANTY ON SAID ITEMS BUT MANUFACTURER DETERMINES ELIGIBILITY AND MAKES THE FINAL DECISIONS.

TAFCO DOES NOT ASSIGN ANY OF IT DEALERS, DISTRIBUTORS OR AGENTS THE RIGHT OF WARRANTY ON ITS BEHALF. IF A DEALER OR DISTRIBUTOR IS PERFORMING A SERVICE, REPAIRS, OR RETURNS ON BEHALF OF THE PURCHASER SUCH PARTS, VALIDITY OR APPLICABILITY OF THE WARRANTY REGARDING SUCH PART(S) REMAINS SOLELY THE PREROGATIVE OF TAFCO AND NOT ITS AFOREMENTIONED AGENTS.

TAFCO'S OBLIGATION UNDER THIS WARRANTY IS LIMITED TO THE REPLACEMENT OR REPAIR OF ANY PART OR PARTS THEREOF, WHICH WITHIN THE WARRANTY PERIOD IS DEEMED WARRANTABLE, AND DOES NOT COVER LOSS OF USE, OR INCOME BECAUSE OF FAILURE.

THIS WARRANTY DOES NOT EXTEND TO ANY UNIT, OR PART THERE OF THAT HAS BEEN SUBJECTED TO MISUSE, NEGLECT, ACCIDENT, IMPROPER INSTALLATION, AND/OR LOADING OVER OR ABOVE WEIGHT RECOMMENDATIONS.

THIS WARRANTY DOES NOT EXTEND TO ANY UNIT, OR PART THAT HAS BEEN REPAIRED OR ALTERED WITHOUT TAFCO'S APPROVAL, OR TO WHICH ANY ACCESSORIES OTHER THAN TAFCO PRODUCTS HAVE BEEN AFFIXED, OR TO ANY UNIT NOT INSTALLED BY AN AUTHORIZED TAFCO DEALER OR DISTRIBUTOR.

ALL WARRANTY REPAIR OR REPLACEMENT, INCLUDING ANY OCCASION WHERE A UNIT OR PART MUST BE REPAIRED OR REPLACED IN THE FIELD, MUST BE PER TAFCO'S DIRECTION OR DETERMINED BY MUTUAL AGREEMENT AND PREAPPROVED IN ADVANCE OF ANY WORK BEING PERFORMED.

SHOULD TAFCO DETERMINE PARTS MUST BE RETURNED TO THE FACTORY FOR INSPECTION, ALL RETURNS MUST INCLUDE A TAFCO ASSIGNED RETURNED MERCHANDISE AUTHORIZATION NUMBER (RMA #), AND TRANSPORTATION CHARGES PREPAID BY SENDER.

TAFCO'S POLICY IS THAT A PROFIT SHOULD NOT BE MADE ON WARRANTY WORK, SINCE THIS IS A PART OF A DISTRIBUTOR OR DEALER FUNCTION. ALL PARTS WILL BE REPAIRED OR REPLACED AT TAFCO'S DISCRETION. ALL CLAIMS ARE HANDLED ON A CASE-BY-CASE BASIS.

FOR WARRANTY QUESTIONS CALL TOLL FREE 800-328-3189.

PLEASE HAVE YOUR PRODUCT SERIAL NUMBER AND ORIGINAL INVOICE READY TO REFERENCE WHEN CALLING.