Scott®

TRUCK BODIES AND HOISTS

LL700

125-598

IMPORTANT INFORMATION

Congratulations on your recent purchase of a Scott Hoist! This manual is only a small part of Tafco's continuing effort to serve our customers and bring the best products possible to you. If you have any questions or experience any problems, contact your local Scott Hoist distributor. Your nearest distributor can be found at www.tafcoequip.com/dealer-locator

This manual has been prepared to provide the owner, installer and operator with the information required to properly install and operate this Scott Hoist. It is important that you, the owner, and the operator, read this manual prior to installing, operating, or performing any maintenance work on the unit.

For your convenience, we have provided the space for you to record this hoist, pump model, serial numbers, date of purchase, your dealership name and address.

OWNER NAME: _____

OWNER ADDRESS: _____

OWNER E-MAIL: _____

HOIST MODEL NUMBER: _____

HOIST SERIAL NUMBER: _____

PUMP MODEL NUMBER: _____

PUMP SERIAL NUMBER: _____

PURCHASE DATE: _____

INSTALLATION DATE: _____

DEALER NAME: _____

DEALER ADDRESS: _____

DEALER TELEPHONE NUMBER: _____

INDEX

Specifications 4

Installation tips 5

Capacity charts 6

Installing the hinge (non-subframe models) 7

Installing the hoist 7

Installing the subframe hoist 10

Installing the body 13

Attaching the upper mounts 14

Installing cross channel supports 16

The Patented Interlock System 16

Plumbing 17
130-205 single valve single motor pump 17
130-206 dual valve single motor pump 18
140-759 twin motor pump 19
125-362 Bi-Rotational pump plumbing 20
140-561 reservoir with single valve and 125-361 bi-directional pump 21
140-563 reservoir with double valve and 125-361 bi-directional pump 22
125-810 reservoir with 12-volt electric valve and 125-361 bi-directional pump 23
125-815 reservoir with premium 12-volt electric valve and 125-361 bi-directional pump 24

Electrical 25
130-205 single valve single motor pump electrical diagram 25
130-206 dual valve single motor pump electrical diagram 25
140-759 twin motor pump electrical diagram 26
125-810 reservoir with 12-volt electric valve 26
125-815 reservoir with premium 12-volt electric valve 27

Hydraulic controls 27
130-016 push pull cable control 27
120-284 and 120-285 toggle air kit 28
125-381 Air shuttle 29

Oil Recommendations 29

Charging Hydraulic system 30

Grease zerk locations 30

Replacement parts 31

Cylinder Disassembly and seal replacement 32

Cylinder breakdown 32

Warranty information 33

SPECIFICATIONS

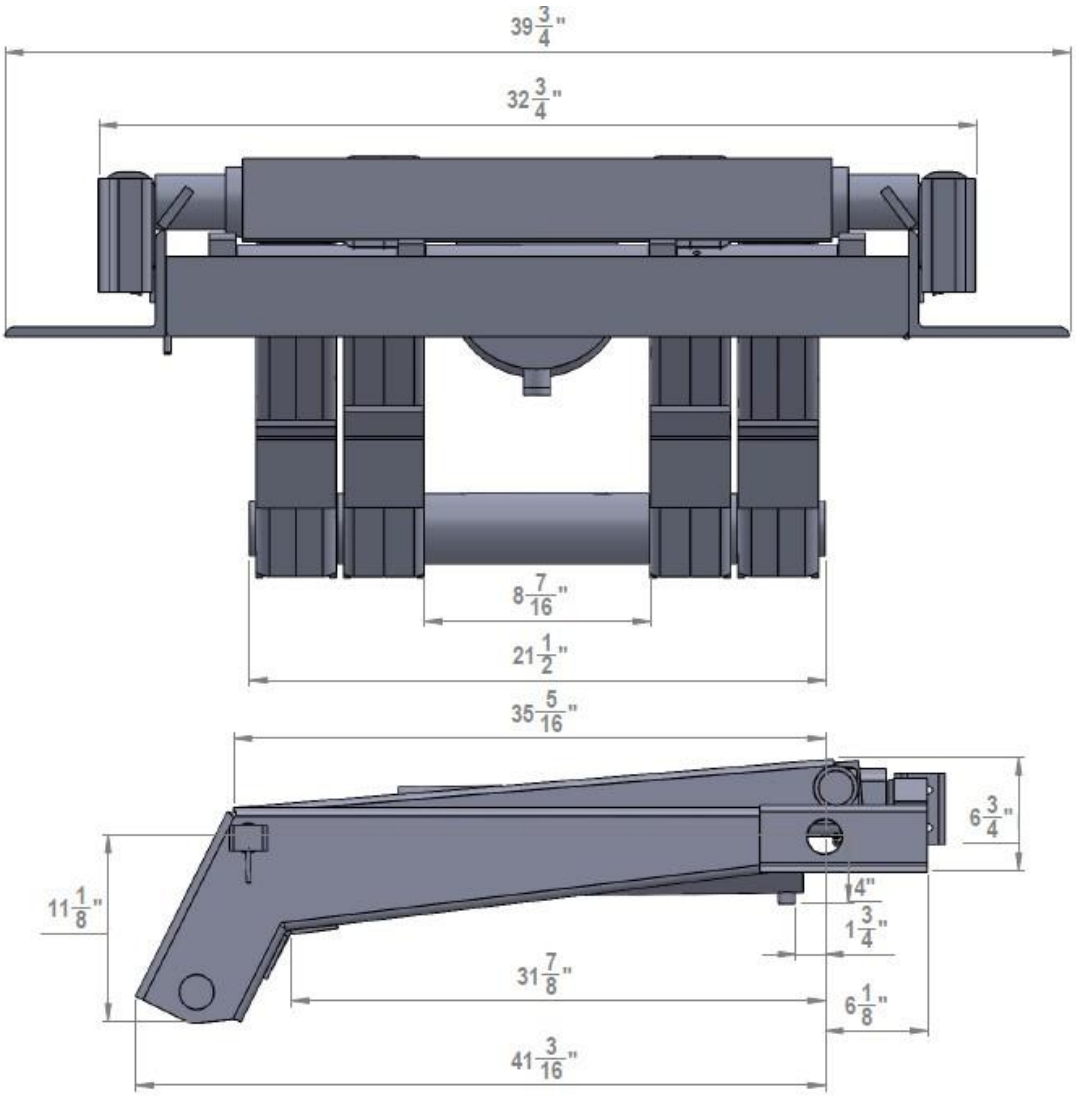

Class E hoist

Recommended for bodies between 12’ and 16.

Cylinder 6” bore, 19”” stroke 2” Rod

LL700 mounting height 7 25/32”

LL700 Approximate Weight 623 lbs.

Gear pumps are set at 3250 PSI and 6 to 10 GPM.

Electric pumps are set at 3200 PSI and .75 to 3 GPM.

Twin motor pumps are set at 3200 PSI and 1.5 to 6 GPM.

INSTALLATION TIPS

1: All work should be performed by qualified personnel.

2: When working under, on or around the hoist or body, always make sure that all raised components are mechanically supported and not held by the hydraulics alone.

3: Take time to become familiar with all the hoist parts, how they operate, and how they are to be mounted, before proceeding.

4: Never modify the hoist or any part in any way. Install all parts according to this manual.

5: All non-subframe hoists can be installed scissor hinge forward or back for versatility. This has no effect on lift or mounting length.

NOTE: All diagrams in this manual are pictured scissor hinge back.

6: Using the hoist calculator at www.tafcoequip.com/calculator or the mounting chart on page 4 choose the proper hoist for the body size and lift desired.

7: When determining where hoist components will be positioned, pay attention to truck exhaust, drive line components, fuel tanks, break lines, fuel lines, wires and crossmembers.

8: Tafco Equipment Company does NOT recommend notching out or removal of body crossmembers for hoist installation.

9: These instructions are for a typical installation. If your requirements are different due to truck or body configuration, it is the installer's responsibility to ensure proper installation and operation of the hoist.

10: When installing an electric over hydraulic unit, it is recommended that a minimum 250-amp circuit breaker (not supplied) be installed in the power cable as close to the battery as possible. (not included)

11: Make sure all manuals are forwarded to the end user.

CAPACITY CHART

LL 700 MOUNTING LENGTHS							
30	35	40	45	50	55	60	DEGREES
131.5"	112.5"	99.5	88.5"	80.5"	73.5	67.5"	

CAPACITY CHART

BOX LENGTH	CAB TO AXLE	OVER HANG	DEGREES 40	DEGREES 45	DEGREES 50	DEGREES 55	
10'	84"	3"	16.7	14.7	13.4	12.2	LIFT IN TONS
11'6"	84"	9"	15.7	14	12.7	11.7	LIFT IN TONS
12'	84"	6"	13.6	12.1	11.1	10.1	LIFT IN TONS
14'	108"	6"	12.1	10.7	9.8	8.9	LIFT IN TONS
15'	108"	6"	11.2	10	9.1	8.3	LIFT IN TONS

Overhang is based on 32” from centerline of tail hinge to the center of the truck axle with between two and four inches between the cab and body.

LL 700 SUBFRAME MOUNTING LENGTH				
CAPACITY CHART				
BOX LENGTH	CAB TO AXLE	OVER HANGE	DEGREES 50	
10'	84"	3"	13.4	LIFT IN TONS
11'6"	84"	9"	12.7	LIFT IN TONS
12'	84"	6"	11.1	LIFT IN TONS
14'	108"	6"	9.8	LIFT IN TONS
15'	108"	6"	9.1	LIFT IN TONS

Overhang is based on 47” from centerline of tail hinge to the center of the truck axle with two inches between the cab and body.

NOTES

The chart does not cover all mounting conditions. For more information go to www.tafcoequip.com/calculator and use the hoist calculator or contact Tafco at 800-328-3189.

The capacities are calculated at 3200 psi.

Electric pumps reduce capacity by approximately 10%

The capacities given include body weight and assume weight is spread evenly across the entire body.

INSTALLING THE HINGE
(non-subframe models)

Mount the hinge assembly as close to the rear spring hanger as possible. This distance should be 1 to 6 inches. See below.

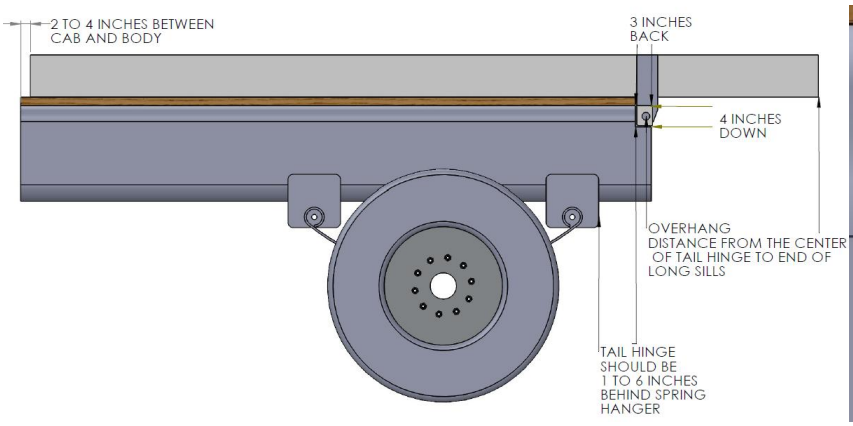

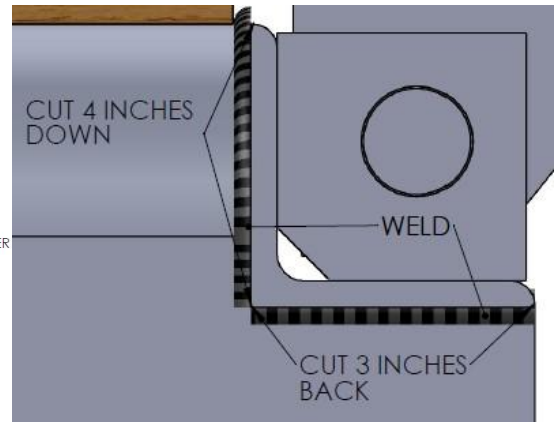

Cut out the area for the hinge to sit down inside the frame. The top of the hinge should be flush with the top of the truck frame. Cut the frame 4 inches down and 3 inches back. After the frame has been cut make sure the hinge is square with the truck frame, then weld it in place (as shown above)

INSTALLING THE HOIST

1: Determine the degree of lift desired. NOTE: Tafco does not recommend lifting over 60 degrees.

2: Use the capacity chart on page 6 or the hoist calculator at www.tafcoequip.com/calculator to determine the proper mounting length for your desired angle of lift.

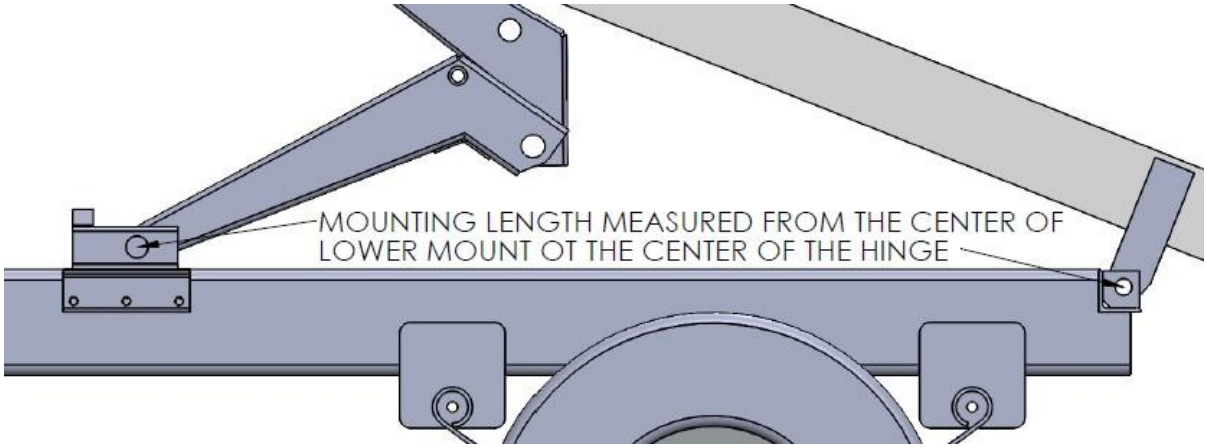

3: Set the hoist in the area chosen and leave it loose.

4: You can now move the hoist around so that the hoist clears all obstructions that may interfere with operation.

NOTE: moving hoist towards the cab will increase lift and decrease dump angle. Moving it away from the cab will have the opposite effect.

5: When the hoist is in the down position, the upper arms should be parallel with the frame of the truck and must be supported on the scissor hinge end. If your final location does not have support in the proper location install support at this time. Shown below.

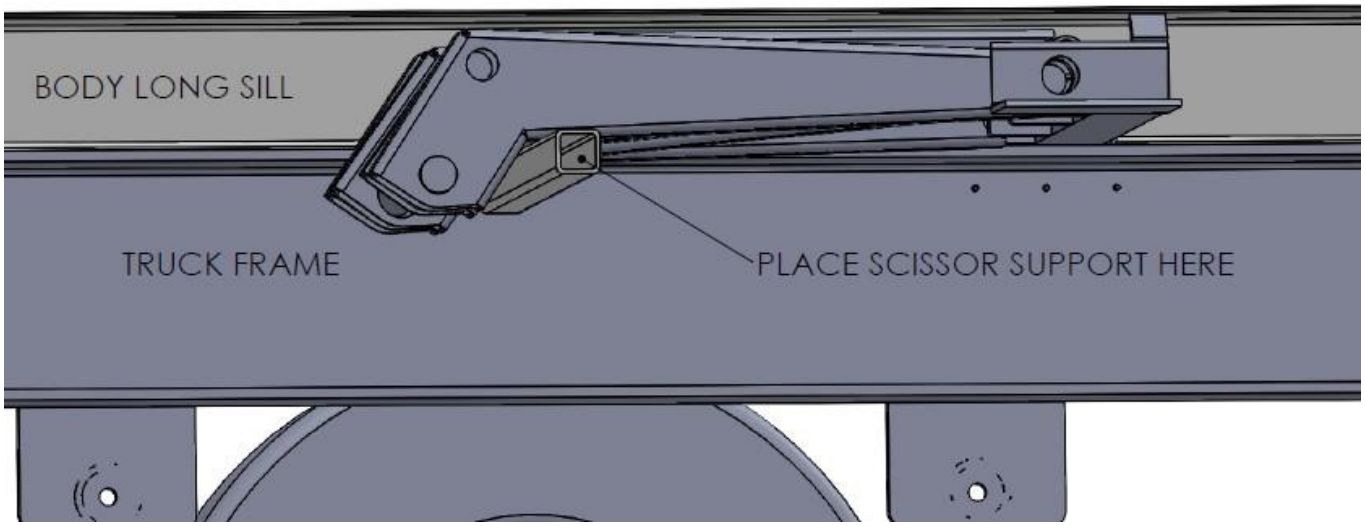

6: Make sure the hoist is square and centered in the truck frame.

7: Set the bolting angles under the lower mount, push the bolting angles into the truck frame making sure they sit flat on the bottom of the lower mount and against the truck frame. It may be necessary to install shims, or otherwise modify the bolting angles, to accomplish this. Weld the lower mount to the bolting angles as shown below.

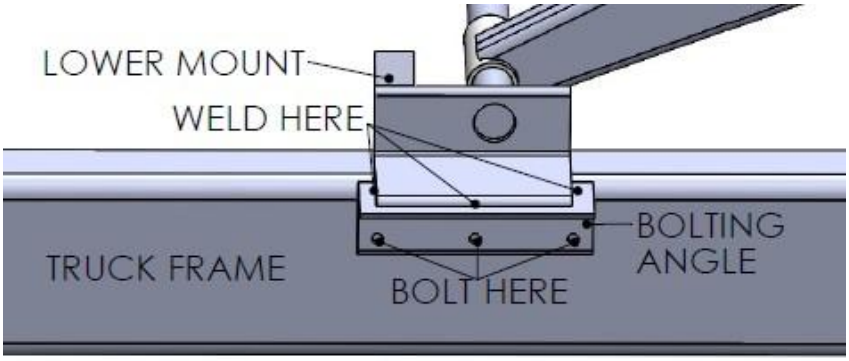

8: Drill three (3), 1/2” inch holes in the truck frame. Secure the bolting angles to the truck frame using ½” x 1 ½” bolts. Do this on both sides of the hoist.

9: Plumb the hydraulics. See PLUMBING page 17.

10: If installing 130-205, 130-206, 140-759, 125-810, or 125-815 electric over hydraulic systems, refer to ELECTRICAL page 24.

If installing 140-561 or 141-563 valve and reservoir with bi-rotational gear pumps refer to HYDRAULIC CONTROLS page 26.

11: Charge the hydraulic system. See CHARGING THE HYDRAULICS page 29.

12: Install the body. See the INSTALLING BODY page 13.

13: Attach the upper mounts. See ATTACHING UPPER MOUNTS page 14.

14: Raise the hoist and body to the full operating angle. Make sure the hoist operates freely and smoothly. All hoses and wires should not interfere with truck operation.

15: Engage Patented interlock system. See PATENTED INTERLOCK SYSTEM page 16.

16: Install cross-channel support. See INSTALLING CROSS CHANNEL SUPPORT page 16.

17: Grease the hoist See GREASE ZERK LOCATIONS. Page 29.

18: Check the hydraulic reservoir oil level.

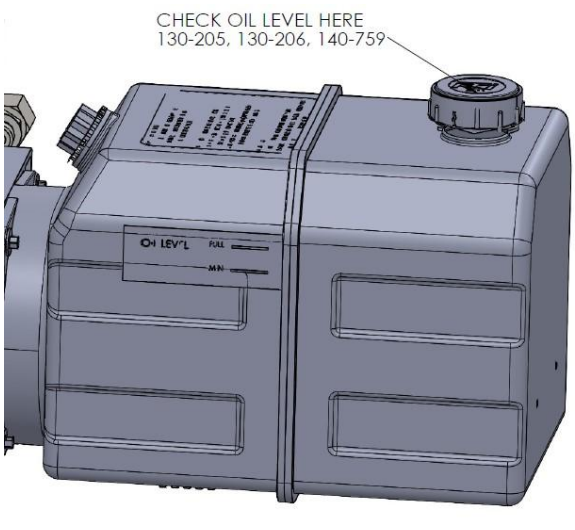

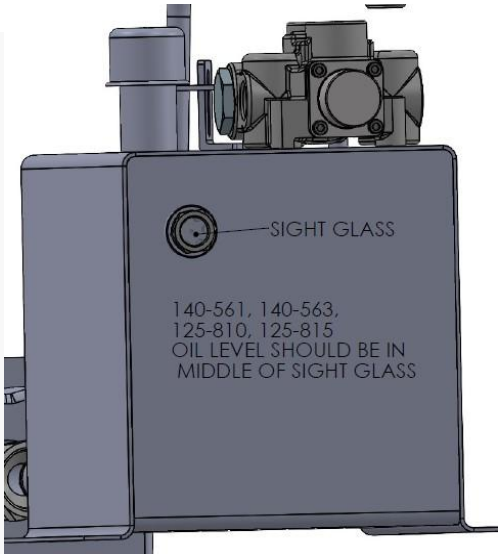

19: Your hoist installation is complete.

INSTALLING A SUBFRAME HOIST

1: The subframe hoist must contact as much of the truck frame as possible. This is most important in the tail hinge area and under the lower mount. If you have a contoured frame, fabricate, and install spacers as required. See below.

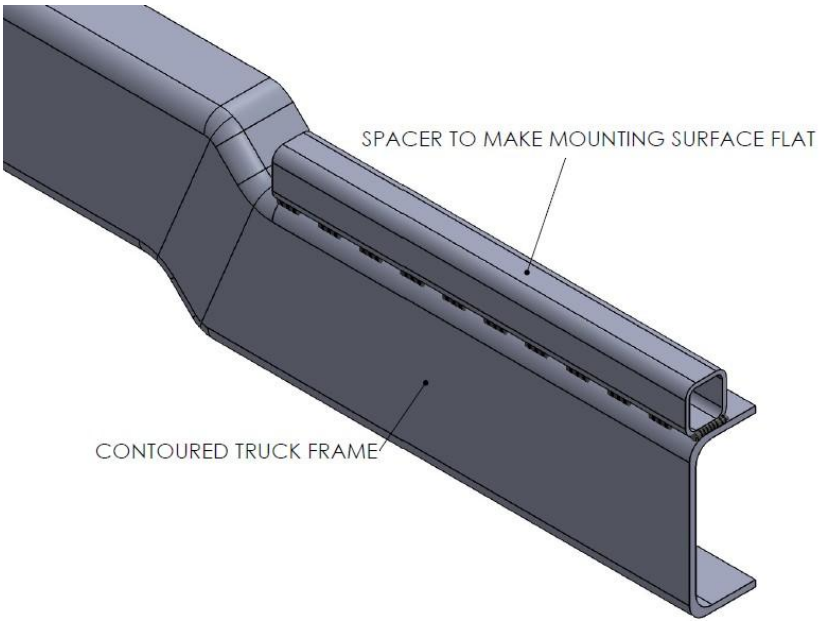

2: Make sure that the subframe is square and centered on the truck. The hinge should sit ¼" from the end of the truck frame rails.

On a straight frame truck

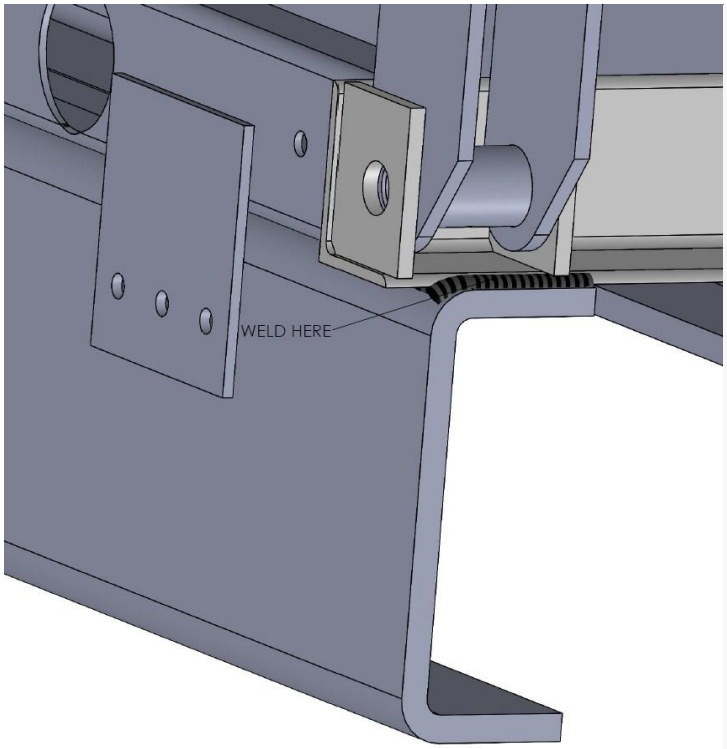

On a contoured frame truck.

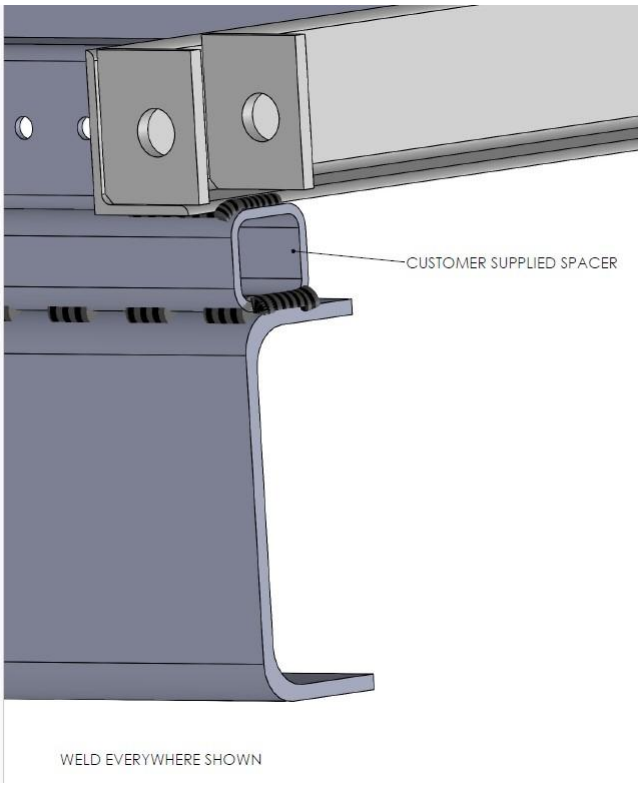

3: Tafco supplies shear plates to secure the sub-frame in 6 locations, 3 on each side, and 2 locations on the front extension.

On a straight frame

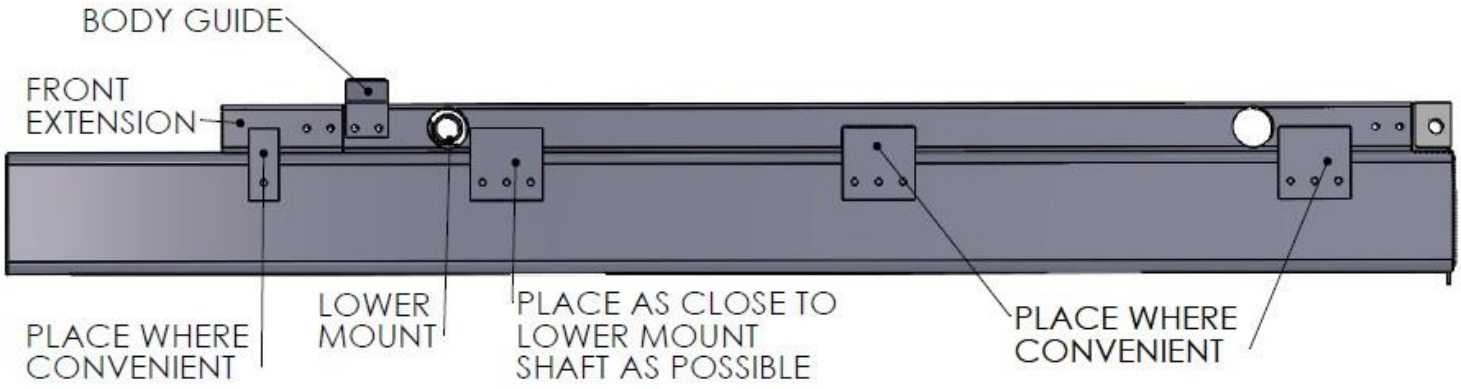

On a contoured frame

It may be necessary for the customer to fabricate shear plates on a contoured frame as shown below. It may also be necessary to install shims or spacers between the shear plates, and the truck frame, or subframe, to mount the shear plates.

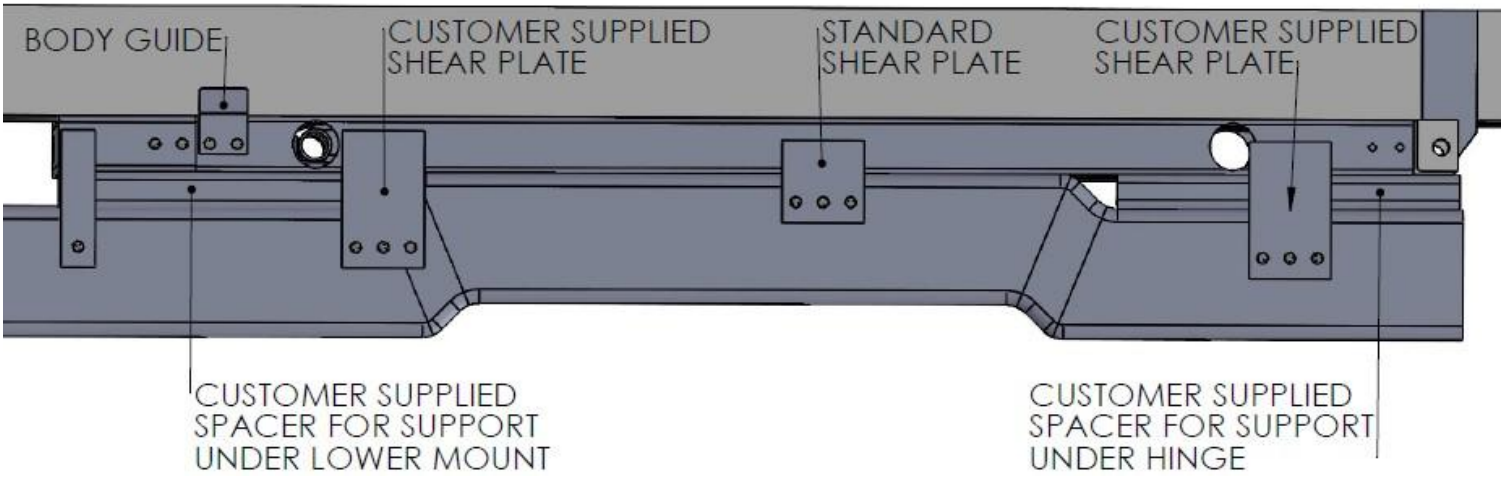

4: Shim, bolt, and weld shear plates as necessary. Shown below.

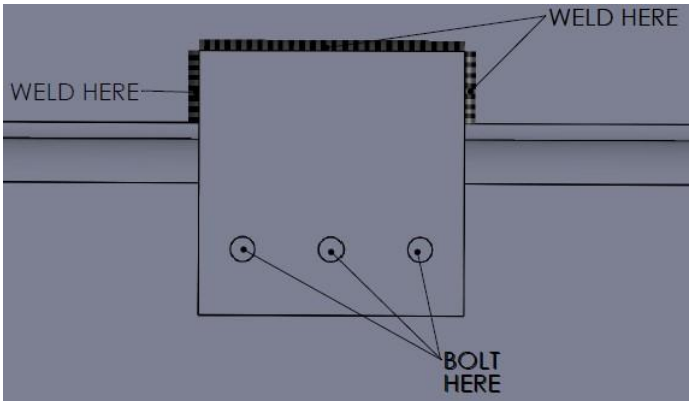

5: Install the front extension. A 10” extension is sent as standard equipment with your subframe hoist. A 24” extension spacer (not shown) is also available as an option. Using the bolting bracket (not shown) on the inside of the subframe, bolt the front extension and body guide in place using four (4) ½’ x 1 ½” bolts. See below.

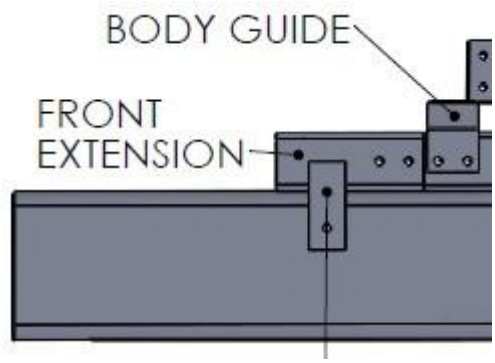

6: Plumb the hydraulics. See PLUMBING page 17.

7: If installing 130-205, 130-206, 140-759, 125-810, or 125-815 electric over hydraulic systems, refer to ELECTRICAL page 24.

If installing 140-561 or 141-563 valve and reservoir with bi-rotational gear pumps refer to HYDRAULIC CONTROLS page 26.

8: Charge the hydraulic system. See CHARGING THE HYDRAULICS page 29.

9: Install the body. See the INSTALLING BODY page 13.

10: Attach the upper mounts. See ATTACHING UPPER MOUNTS page 14.

11: Raise the hoist to the full operating angle. Making sure hoist operates freely and smoothly. All hoses and wires should not interfere with truck operation.

12: Engage Patented interlock system. See PATENTED INTERLOCK SYSTEM page 16.

13: Install cross channel support. See INSTALLING CROSS CHANNEL SUPPORTS page 16.

14: Grease the hoist See GREASE ZERK LOCATIONS page 29.

15: Check the hydraulic reservoir oil level.

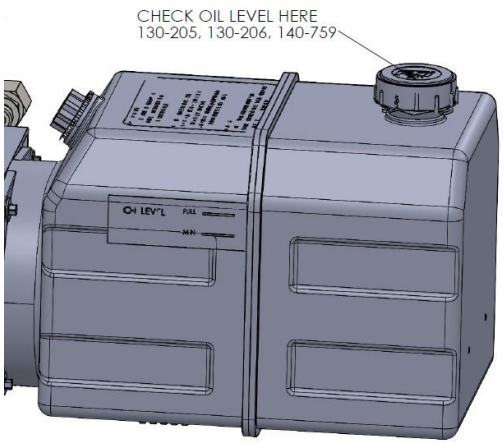

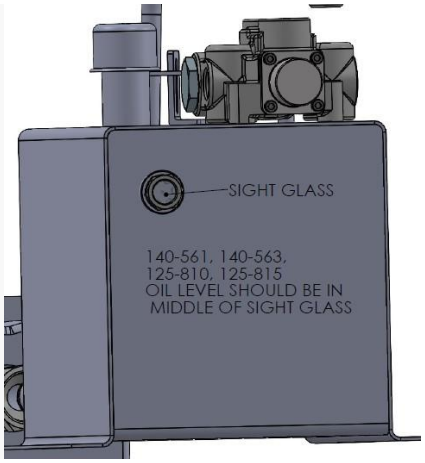

16: Your subframe hoist installation is complete.

INSTALLING BODY

1: It may be desirable to remove the hoist upper mounts and set them aside for reinstallation at a later time.

2: When in the down position the body needs to contact as much of the truck frame as possible. It may also be desirable to install an optional spacer between the long sills of the body and the truck frame. This will help reduce rattles, squeaks, and wear caused by metal-to-metal contact. It can be wood, poly, or rubber. Install the spacer if desired.

3: Carefully set the body on the truck paying attention to the cab to body clearance. There should be a minimum of 2” between the body and cab, 3 ½ inches is recommended.

4: Make sure the body is square and straight with the frame of the truck.

5: To attach the supplied vertical plates to the body long sills, see figures below.

TRAPEZOIDAL OPTION

If trapezoidal or table top mounts are to be used, set body long sills on top of mount and weld all surfaces that meet the long sills.

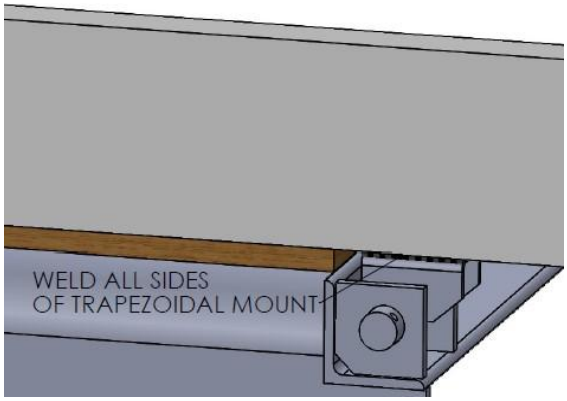

BOLTED OPTION

A spacer must be fabricated out of channel 1” smaller than the long sills of the body and 12“ long. Drill four (4) 1/2” holes and bolt as shown below.

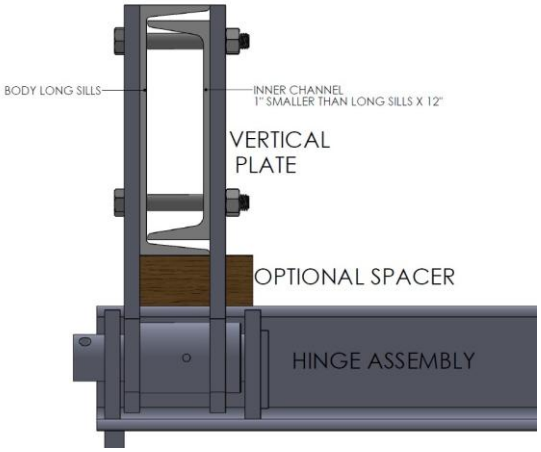

WELDED OPTION

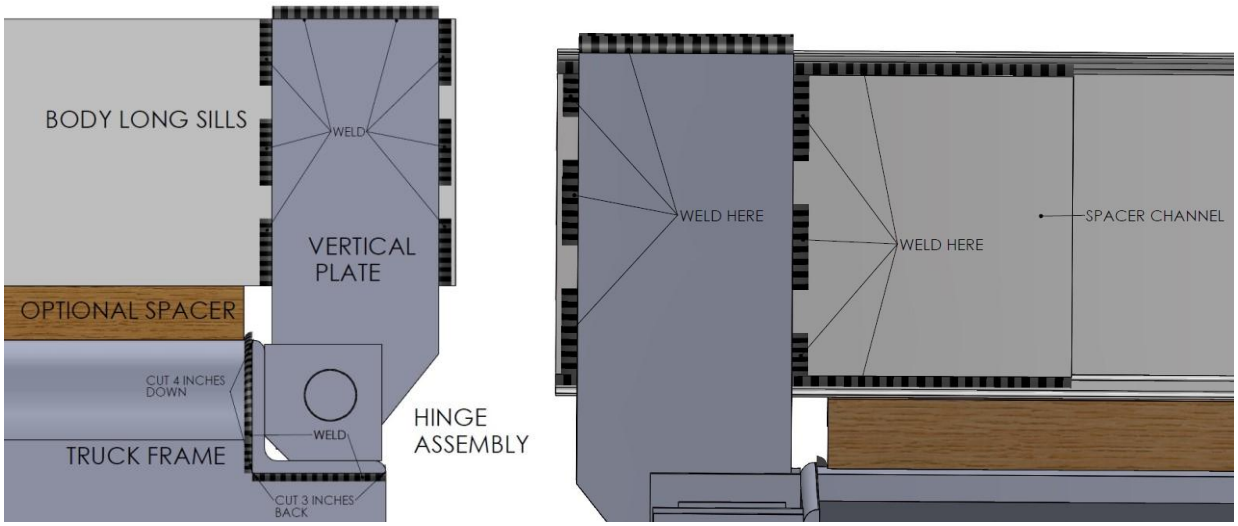

ATTACHING UPPER MOUNTS

1: Lower the hoist and body to the full down position.

2: Slide the upper mounts outward to meet the long sills of the body. Attach the upper mounts per one of the options below.

NOTE:
If it is necessary to raise the body to attach the upper mounts, make sure the mounts do not move when the body is raised.

PLATE STYLE BOLTED OPTION

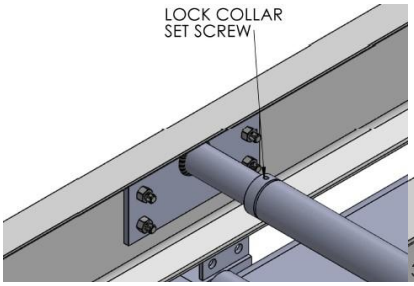

PLATE SYLE WELDED OPTION

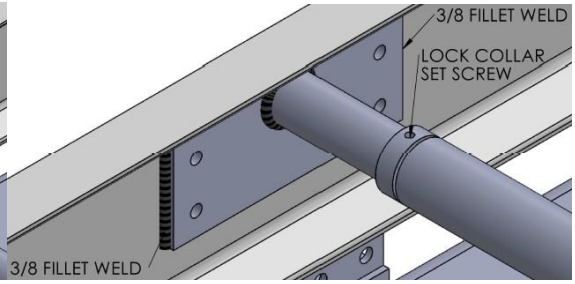

LEG STYLE WELDED OPTION

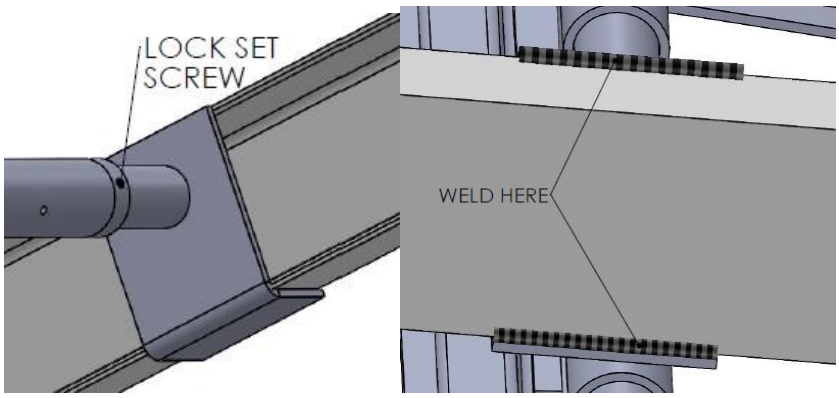

LEG STYLE BOLTED OPTION

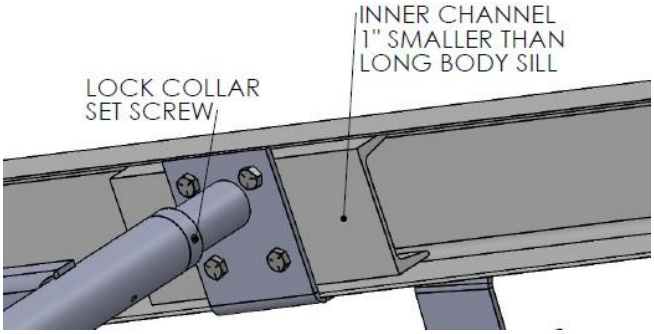

UPPER MOUNT SLIDES

In a small number of applications, the scissor hinge of the hoist will kick up and come in contact with the bottom of the body crossmembers. In that instance the use of upper mount sliders (140-334) will cure the problem.

With the hoist and body in the down position the upper mount sliders are installed with the gap toward the scissor hinge, as shown below.

BOLTED OPTION **WELDED OPTION**

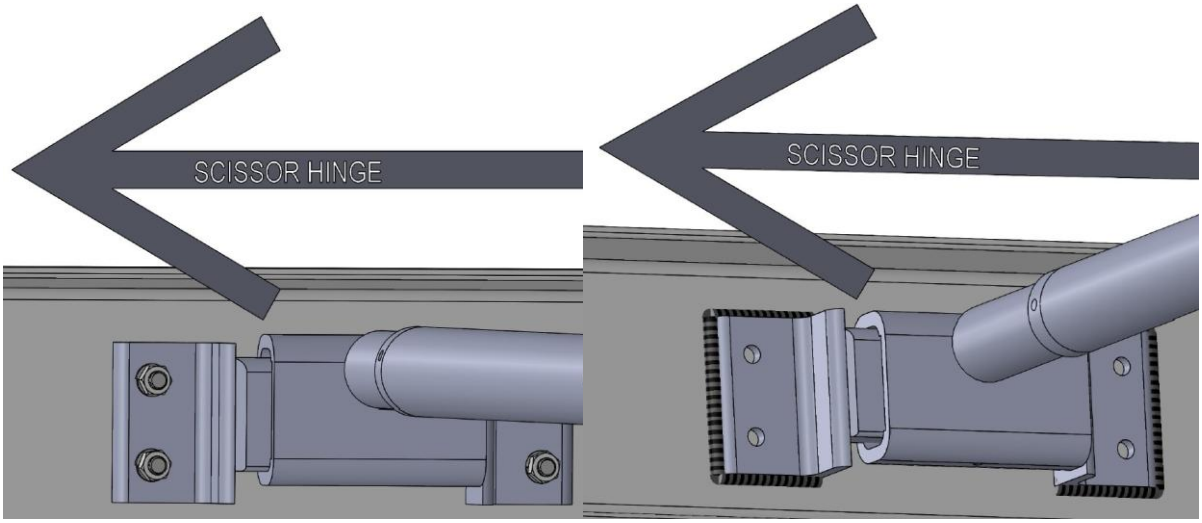

3: After the upper mounts are attached to the long sills of the body place locking collars tight against the upper mount tube of the hoist and tighten as shown below.

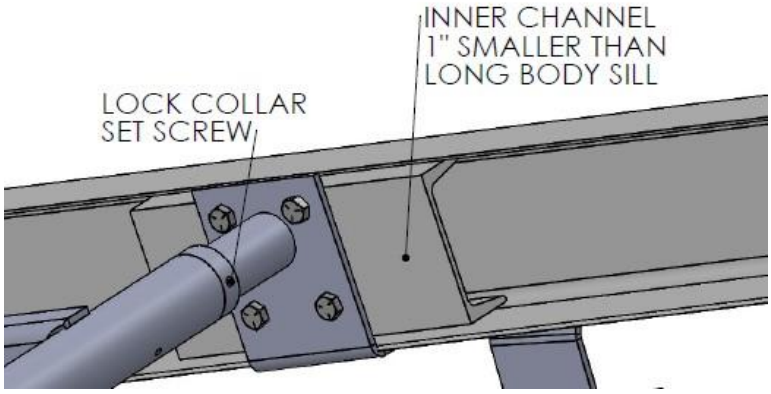

INSTALLING CROSS CHANNEL SUPPORT

Tafco recommends installing 4 cross channel supports per body. Install cross channels as close as possible to: front of the hoist, rear of the hoist, front of the body, the rear of the body. Installing cross channel supports adds strength and prevents twisting when lifting uneven loads.

If not supplied, make the cross-channel braces by cutting a channel iron that is 1” smaller than the long sills of the body. Failure to install cross channel bracing may void warranty on body and hoist.

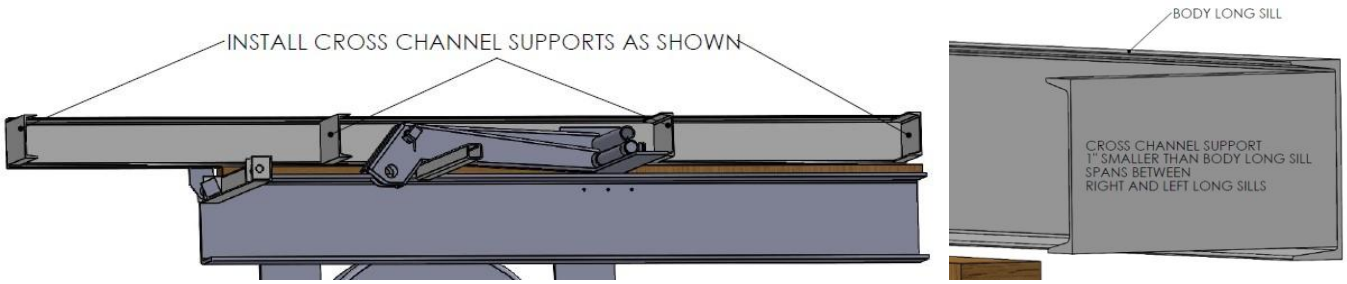

PATENTED INTERLOCK SYSTEM

To engage the patented interlock system, raise the hoist to a point where the interlock pins clear the lower arms. Push the pin in and rotate the handle into the slot making sure that the handle fully engages into the slot, as shown below. Lower the hoist until the pins rest on the lower arms.

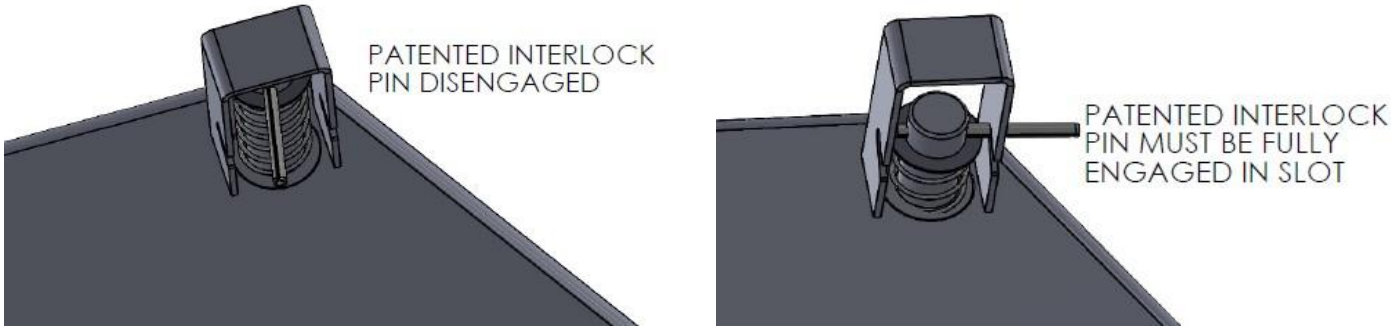

Note: The Patented Interlock System is designed to support only the weight of the hoist and body. Applying downward hydraulic pressure on the pins or attempting to support a loaded body may result in failure of the system.

PLUMBING

There are several options for the hydraulic system. When mounting and plumbing the system it is the installer's responsibility to ensure that all components, hoses, and electrical wires are secure, and there is adequate clearance for all truck components to ensure safe operation of both truck and hoist. Make sure to use quality pipe sealant on all NPT fittings and plumb as shown below.

130-205 standard electric pump and motor.

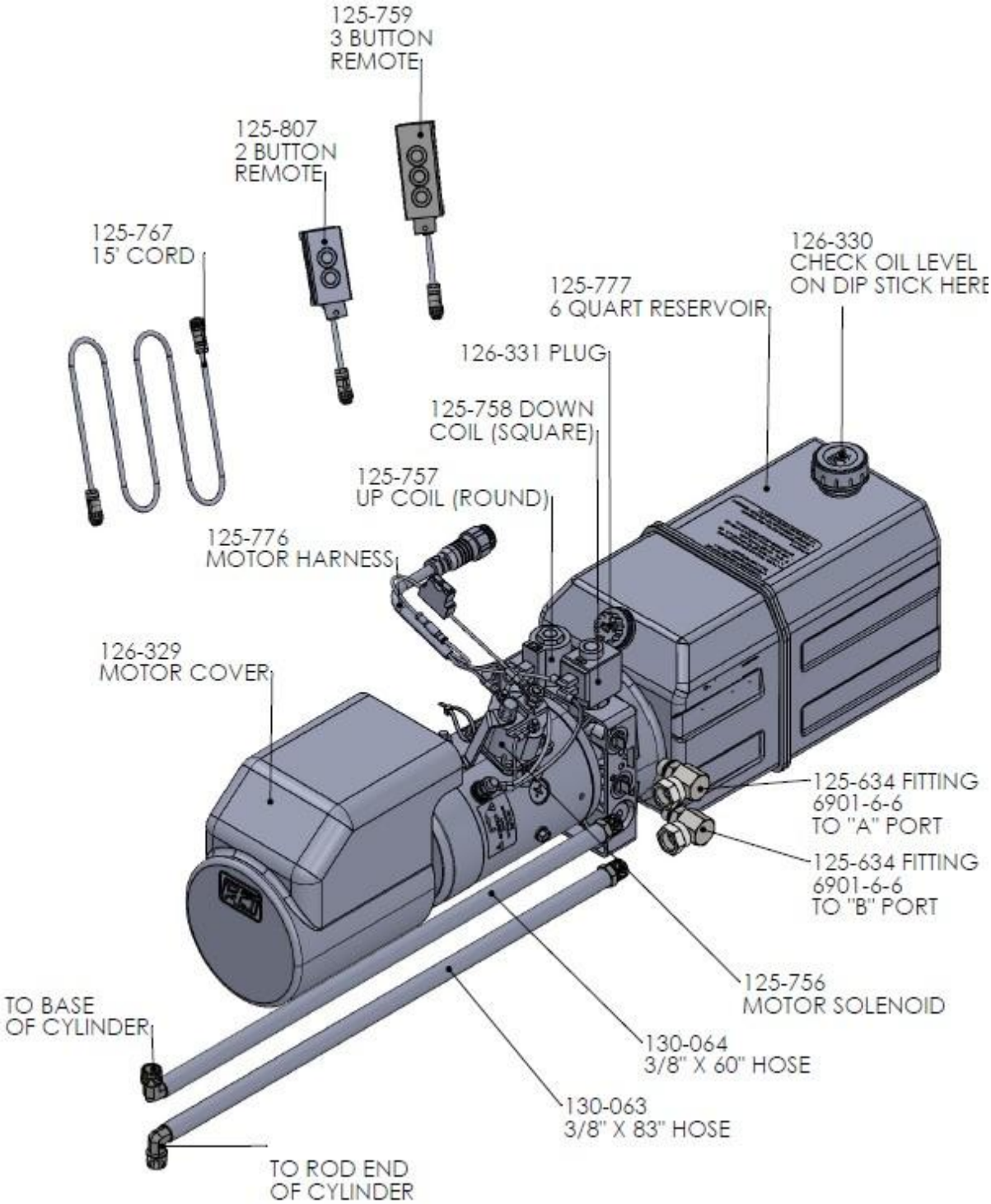

130-206 double valve electric pump and motor.

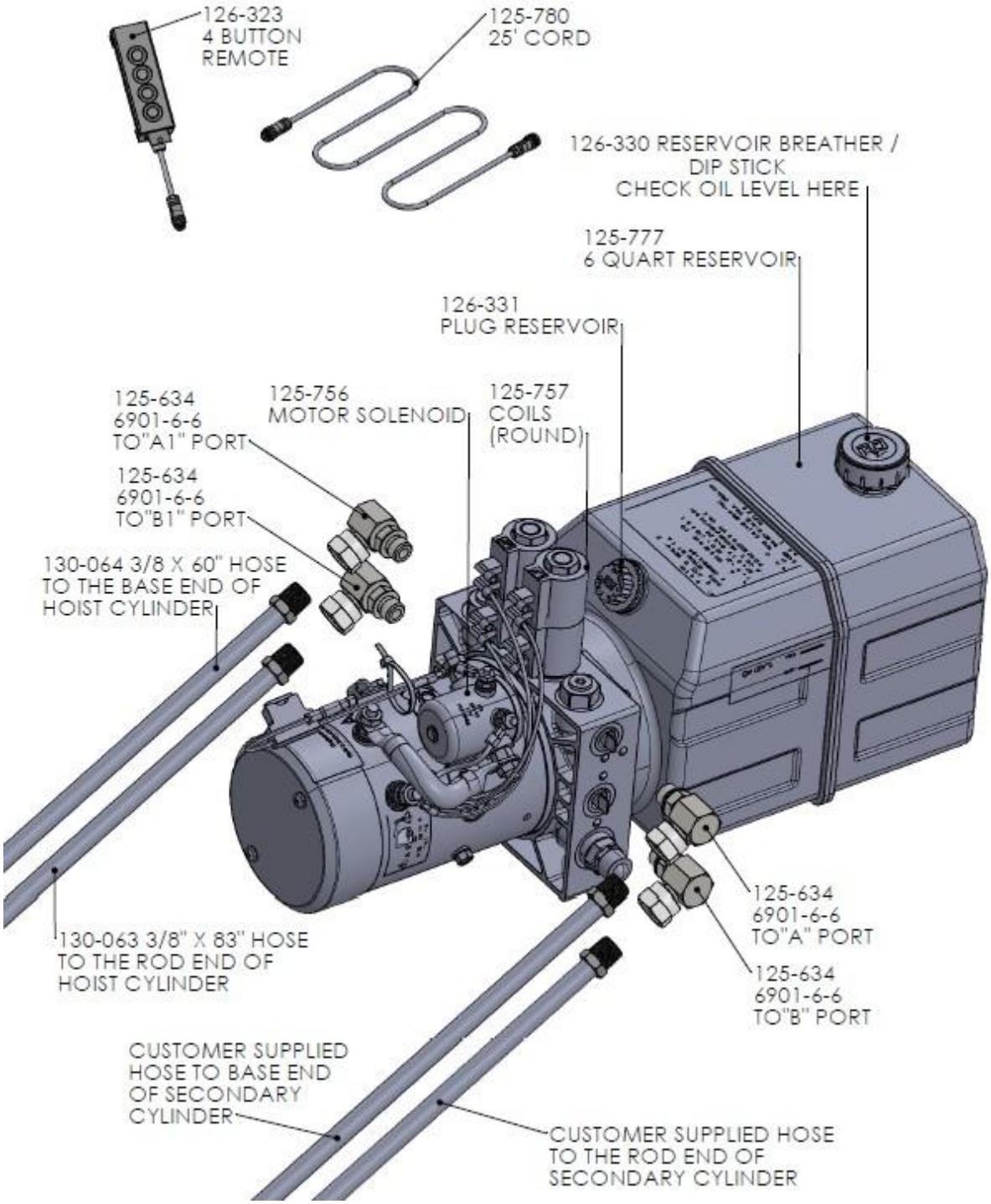

140-759 Twin motor electric pump.

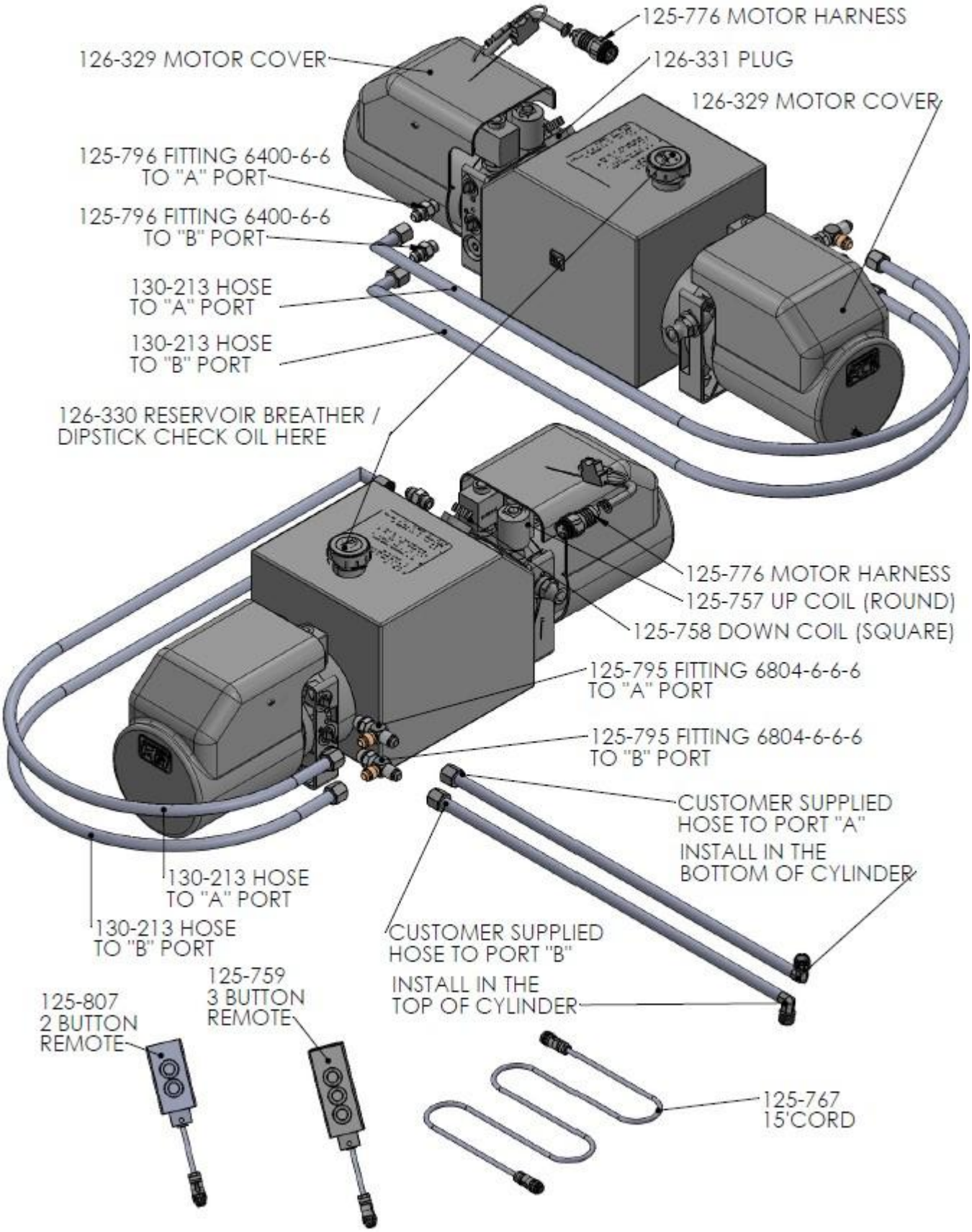

125-362 BI-ROTATIONAL PUMP PLUMBING

INSTALLATION FOR CLOCKWISE ROTATING PTO

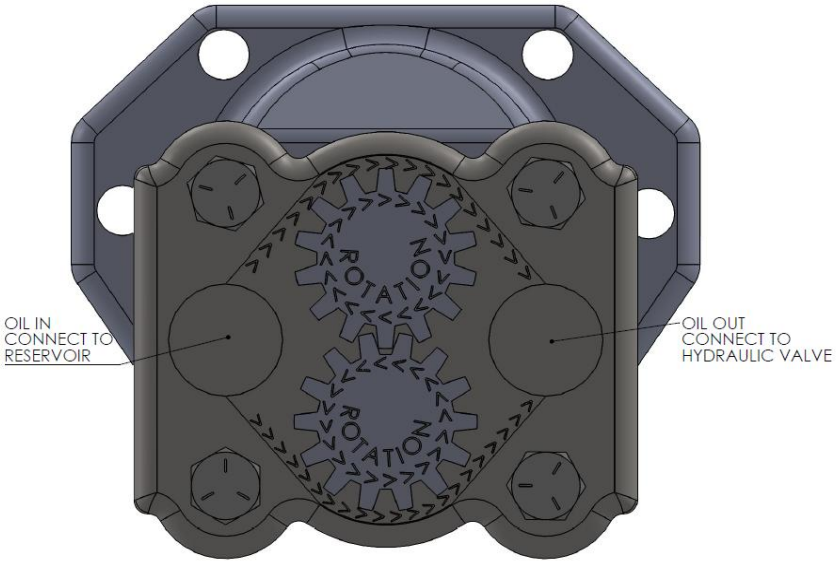

INSTALLATION FOR COUNTER CLOCKWISE PTO

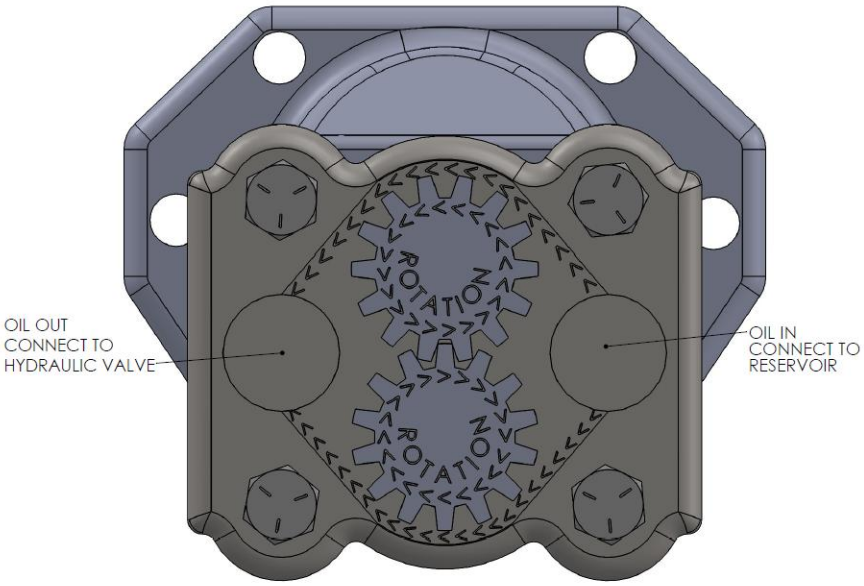

7/8 9 TOOTH SHAFT.

SAE B FLANGE MOUNTING.

2.46 WIDE GEERS.

ROTATION SPEED FROM 400 TO 2700 RPM.

140-561 single valve reservoir with 125-361 bi-rotational pump.

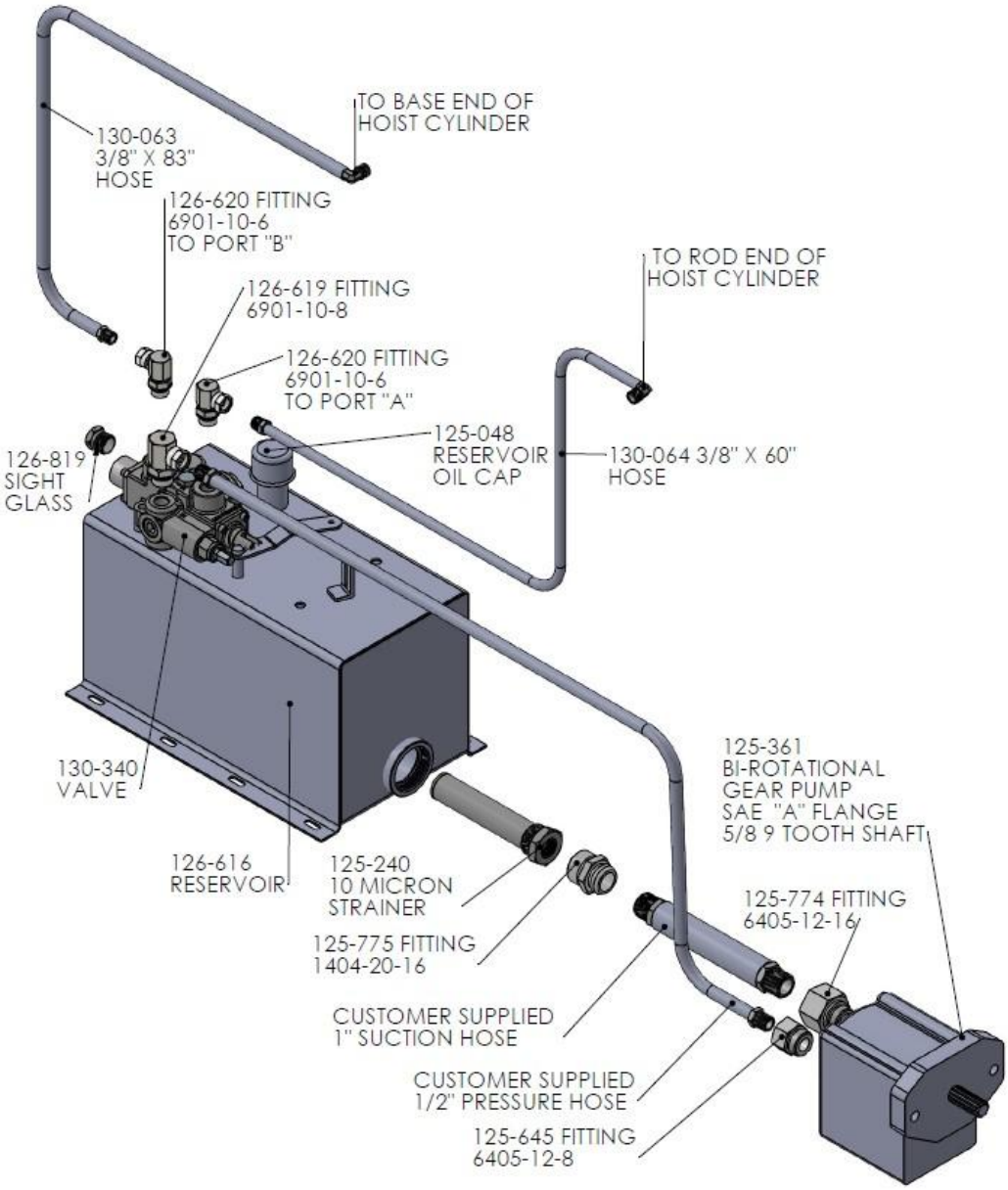

140-563 double valve reservoir with 125-361 bi-rotational pump.

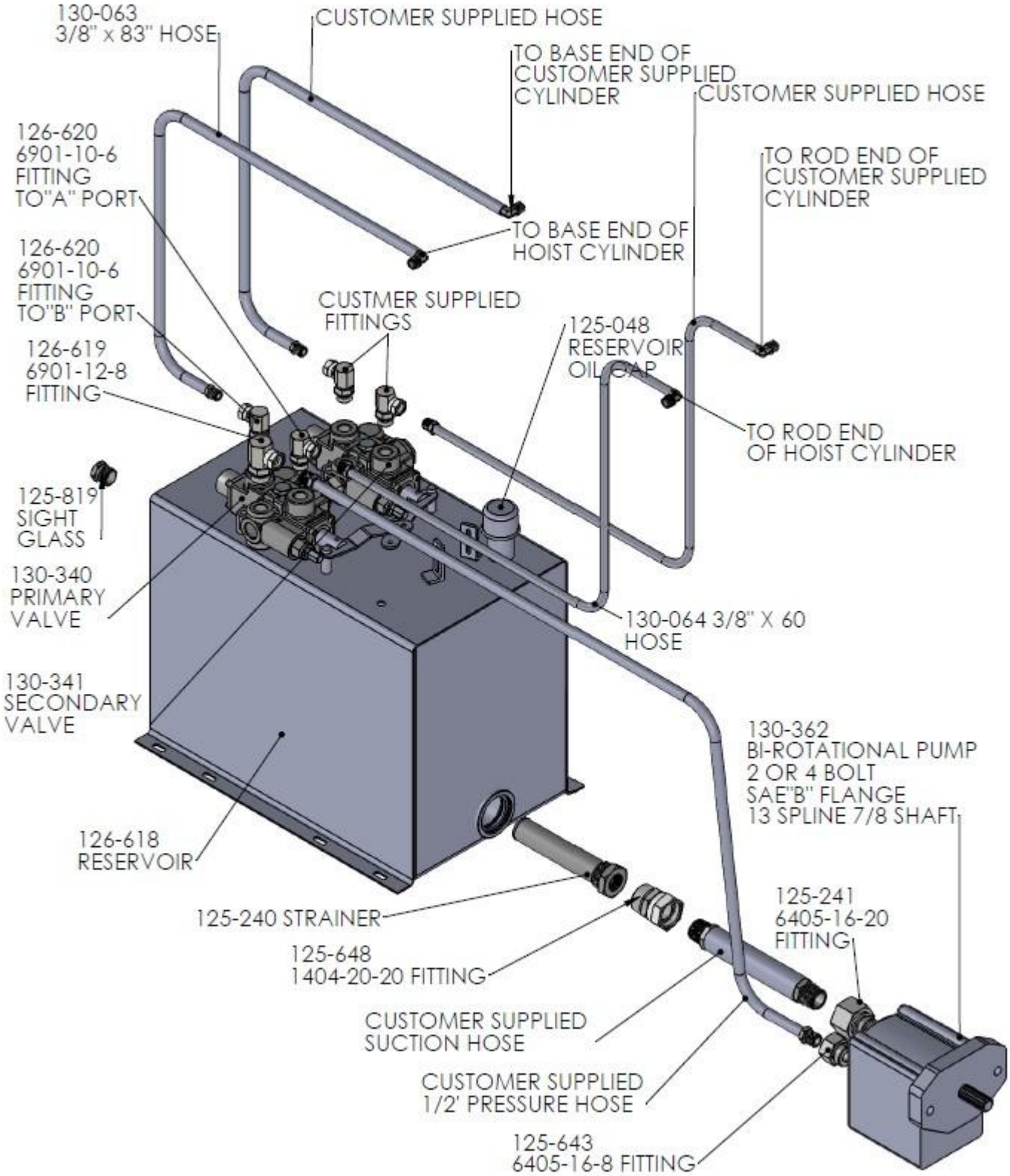

125-810 12 volt reservoir and valve with 125-362 bi-rotational pump

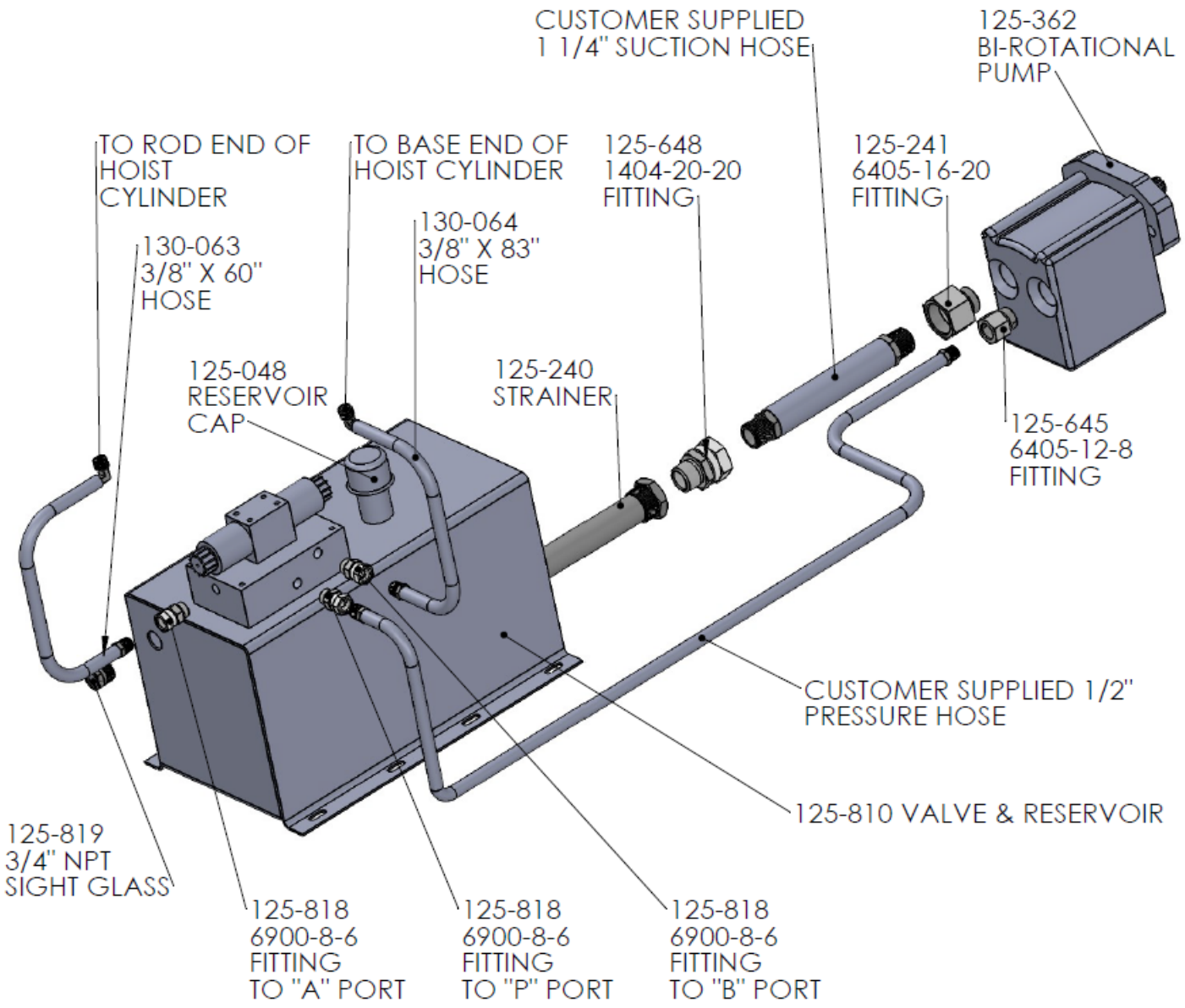

125-815 Premium 12 volt reservoir and valve, with 125-361 bi-rotational pump.

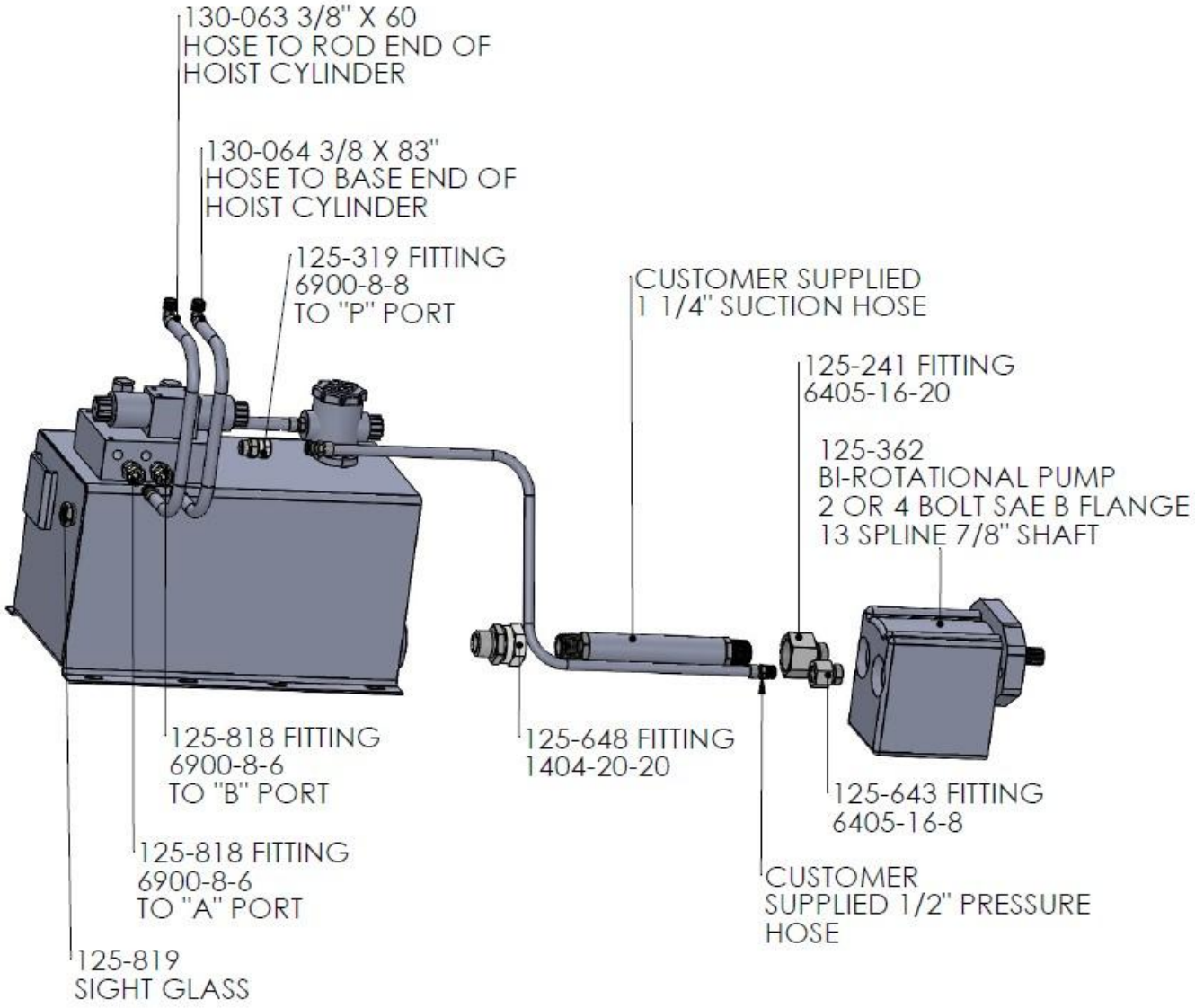

ELECTRICAL

In all electric over hydraulic units. Tafco Equipment Company recommends a minimum 250-amp circuit breaker be installed in the positive cable as close to the battery as possible.

Applying dielectric grease to all electrical connections to prevent corrosion and promote good conductivity is recommended.

130-205 standard electric pump and motor. (125-807 2 button remote or 125-759 3 button remote)

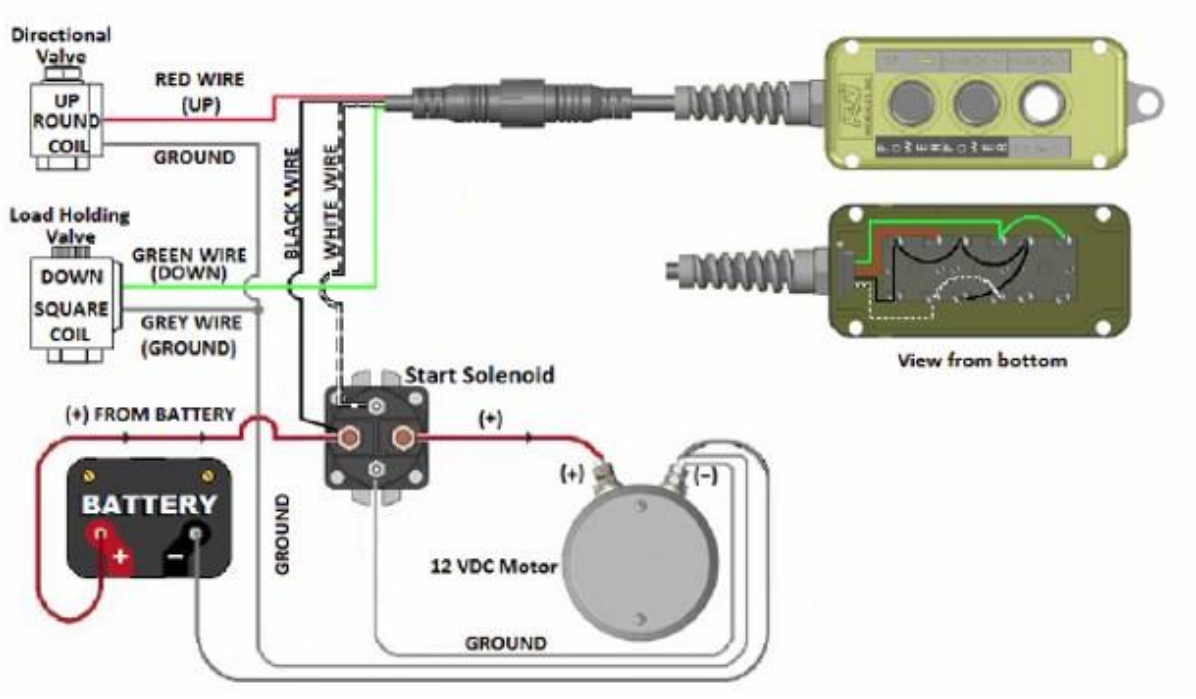

130-206 double valve electric pump and motor. (126-323 4 button remote)

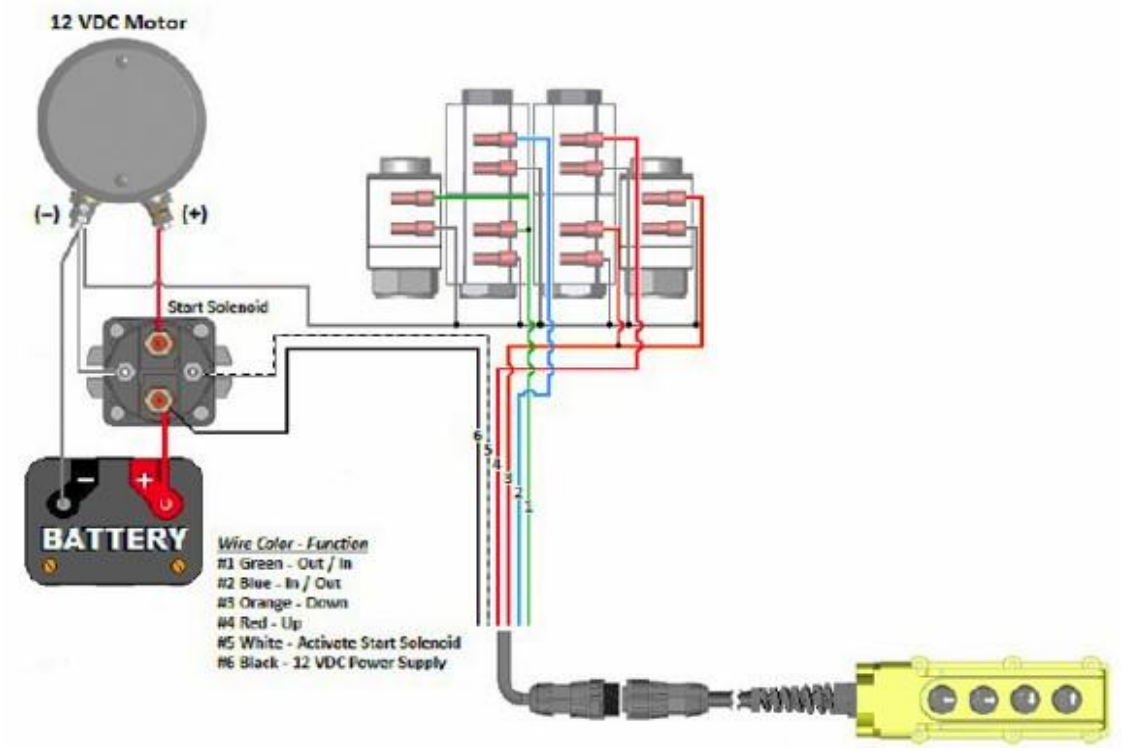

140-759 Twin motor electric pump wiring diagram. (125-807 2 button remote or 125-759 3 button remote)

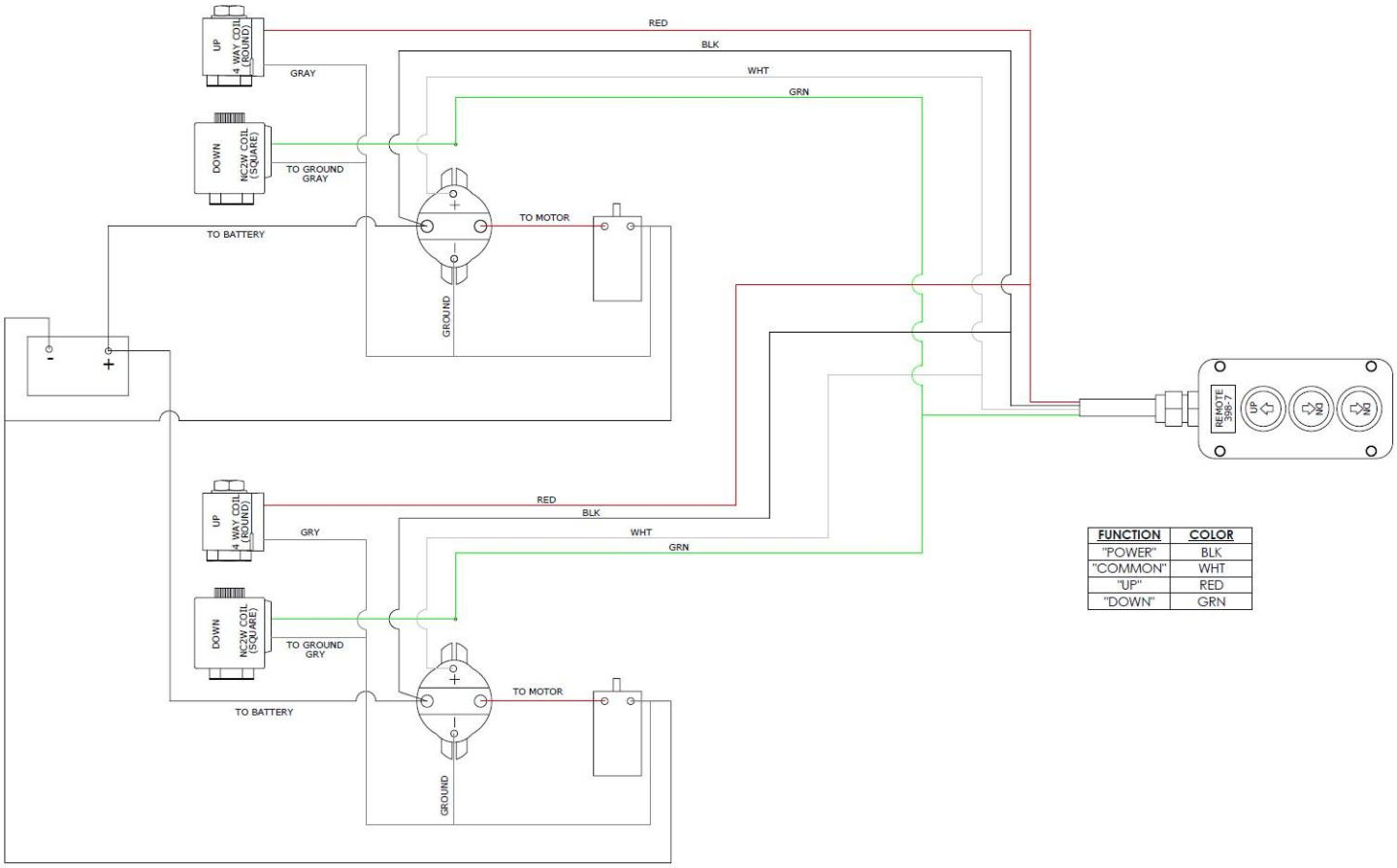

125-810 12-volt valve with 125-362 bi-rotational gear pump electrical diagram

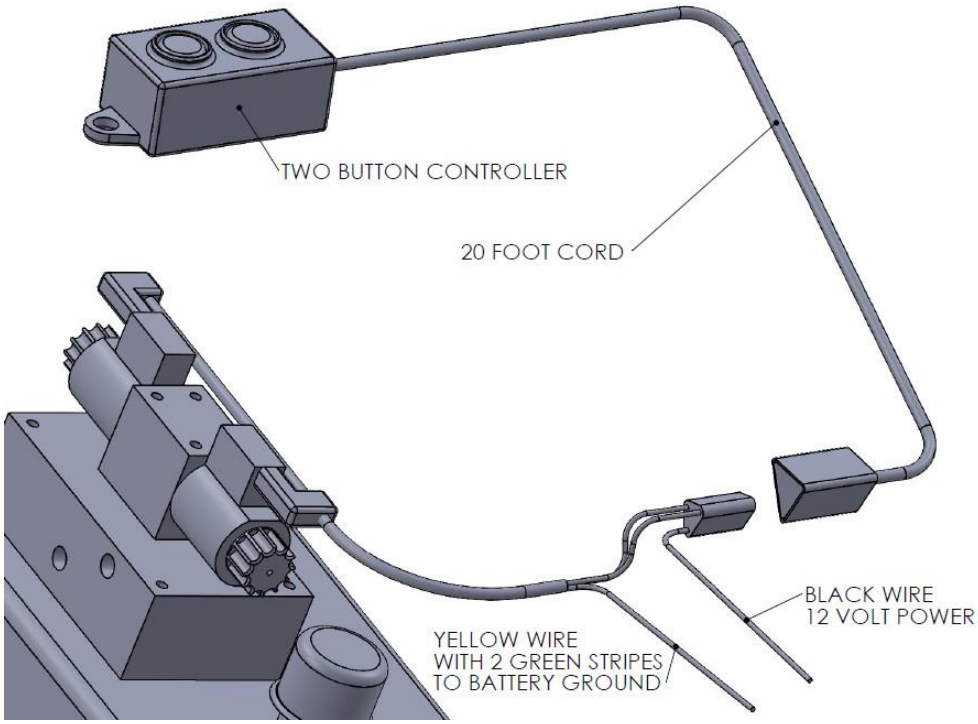

125-815 Premium 12-volt valve with 125-362 bi-rotational gear pump electrical diagram

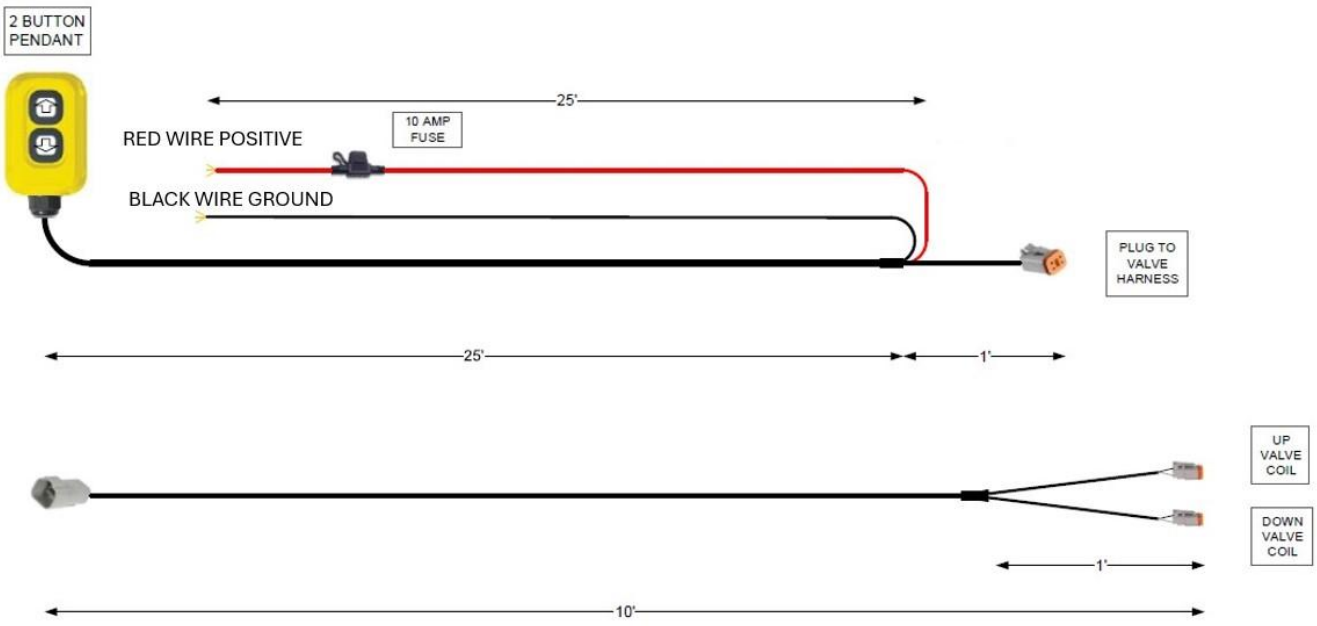

HYDRAULIC CONTROLS

Installation 130-016 push pull cable controls

Mount cable handle in cab in a convenient location. Route cable to the reservoir avoiding kinks and sharp bends. When routed properly, the cable should move freely. The 125-779 cable clamp should be tightened enough to hold the cable in place but not so tight that it restricts the inner cable from moving freely.

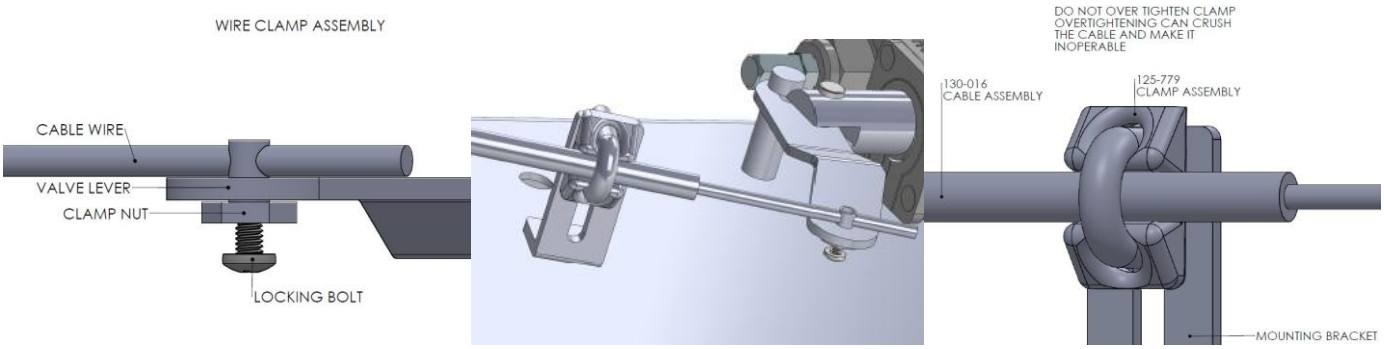

INSTALLATION TOGGLE AIR KIT

120-284 and 120-285

Air toggle valve kit for 140-561 single valve reservoir plumb as shown below.
Air toggle valve kit for 140-563 double valve reservoir plumb as shown below twice.

1: Lower the hoist and shut the engine off. Make sure that the hydraulic system is not charged with any residual pressure by cycling the spool in and out several times.
2: Clean all debris and foreign particles from the valve and the valve face.
3: Remove and discard the roll pin, handle, clamp, and cable. Remove the 4 bolts holding the rear cover and discard the bolts and cover as shown below.

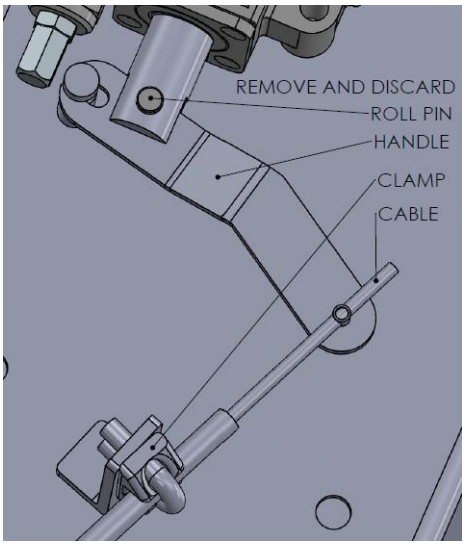

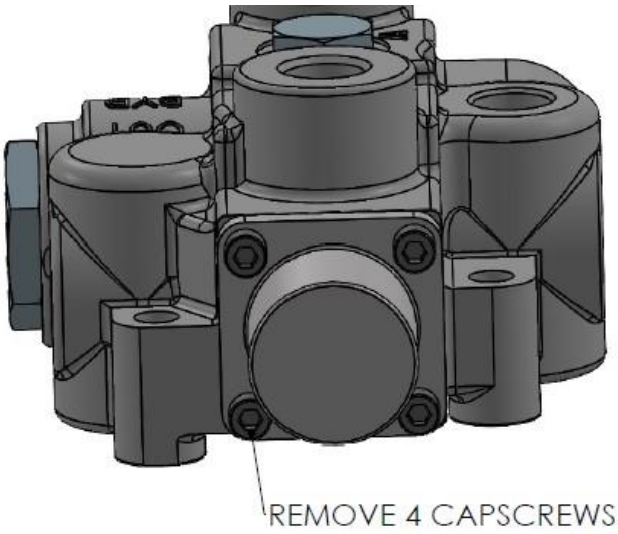

5: Remove the center bolt holding the spring cup and spring from the spool. Discard the spring cup, spring, spacer washer, and the square spacer.
6: The air cylinder does not need to be disassembled to be installed.
7: Apply blue Lock Tite thread locker to the threads inside the valve spool.
8: Insert a 3/16 hex wrench in the down hole on the air cylinder and tighten the spool to the air cylinder. Note you must complete step 7 before step 8.
9: Install and tighten the 4 hex bolts that hold the air cylinder to the valve.
10: Check for proper alignment by rotating the spool from the opposite end. It should rotate freely.
11: Install toggle in desired location and plumb air lines as shown below.

120-284 AIR TOGGLE KIT

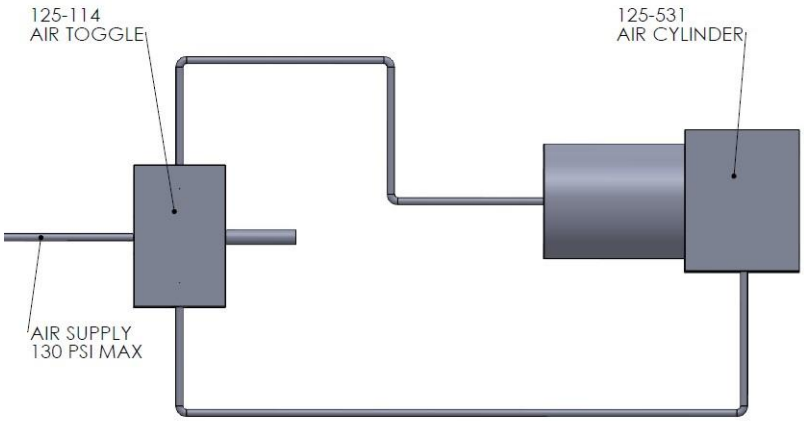

AIR SHUTTLE INSTALLATION

Sometimes it is desirable to have air controls in the cab and at the rear of the body. This can be accomplished with a 125-381 air shuttle valve. Plumb the valve as below.

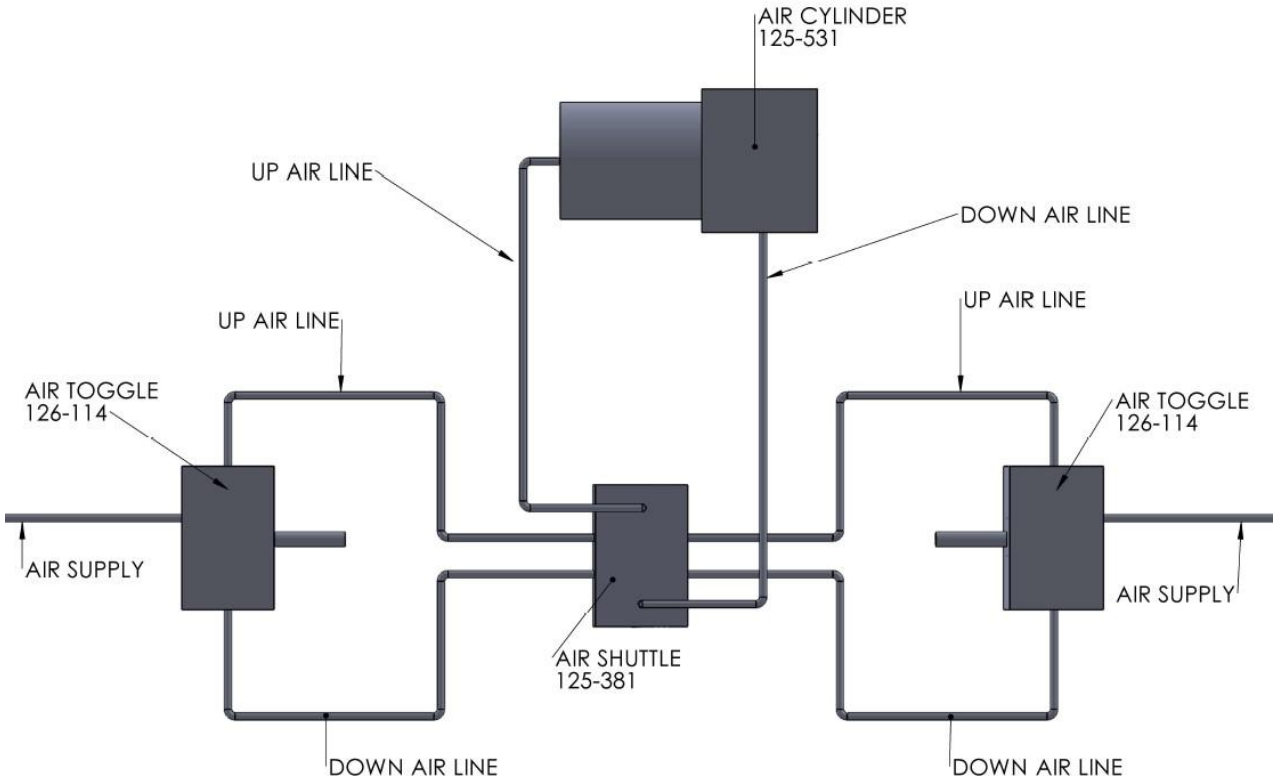

OIL RECOMENDATIONS

Tafco Equipment Company recommends using premium hydraulic oil to ensure optimum performance and system life. Select oil that has anti-wear properties, rust inhibitors, foam inhibitors, and good stability. Examples include Chevron Rando HDZ, Mobile DTE 10, DTE 20. Automotive automatic transmission fluid (Dextron III) is acceptable under normal conditions. In extreme prolonged cold weather conditions Valvoline Royco, or Mobile Aero HF may be used.

CHARGING THE HYDRAULICS

1: Grease the hoist. See GREASE ZERK LOCATION PAGE 29

2: It may be necessary to attach an overhead lifting device to the hoist to allow it to extend fully without damaging another component.

3: Fill the reservoir to the full line. See OIL RECOMMENDATIONS page 28

4: Raise the hoist ¼ the way up. Return hoist to fully retracted position.

5: Fill the reservoir to the full line.

6: Raise the hoist 1/2 the way up. Return hoist to fully retracted position.

7: Fill the reservoir to the full line.

8: Raise the hoist 3/4 the way up. Return hoist to fully retracted position.

9: Fill the reservoir to the full line.

10: Fully raise the hoist. Return hoist to fully retracted position.

11: Fill the reservoir to the full line.

GREASE ZERK LOCATIONS

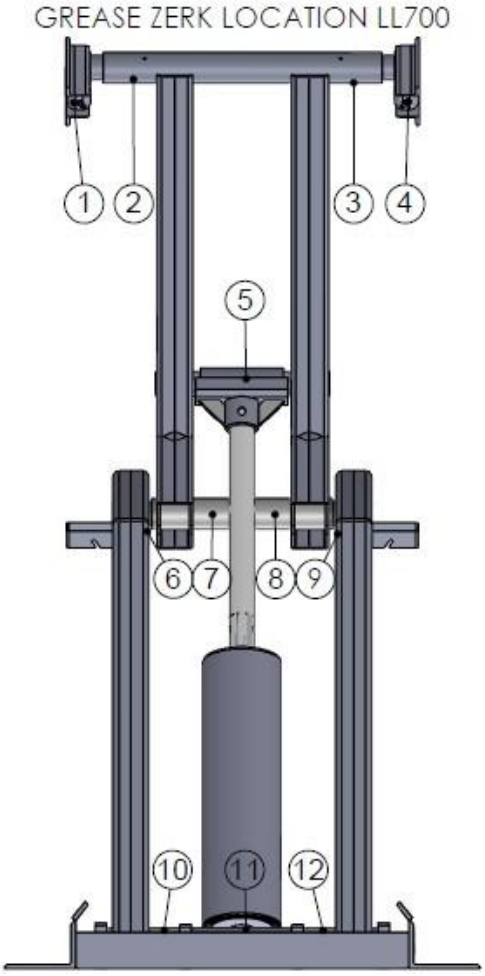

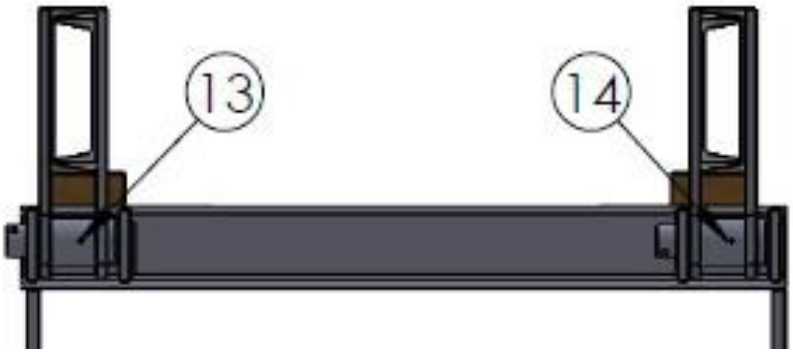

REPLACEMENT PARTS

LL700 AND LL700S

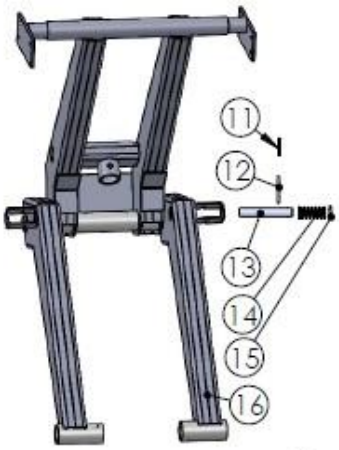

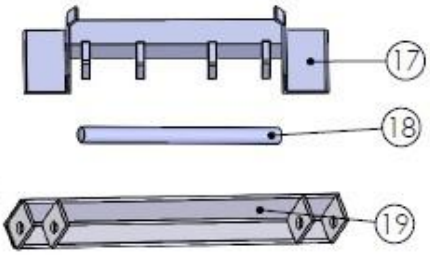

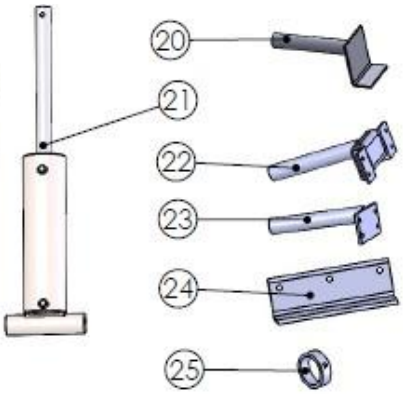

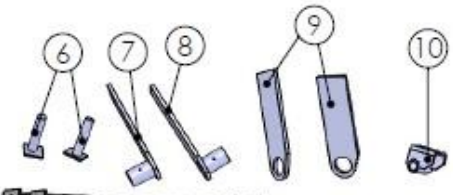

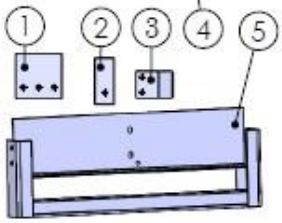

ITEM NO.	PART NUMBER	DESCRIPTION	QTY.
1	109-682	LARGE SUBFRAME SHEER PLATE	6
2	109-692	SMALL SUBFRAME SHEER PLATE	2
3	110-488	GUIEDE TAB	2
4	NA	SUBFRAME	1
5	NA	10" SUBFRAME EXTENTION	1
6	140-508	HINGE PIN	2
7	140-510	R. H. VERTICAL PLATE AND BUSHING	1
8	140-509	L. H. VERTICAL PLATE AND BUSHING	1
9	110-234	VERTICAL PLATE	2
10	125-855	TRAPEZOIDAL HINGE	2
11	115-269	PIN COVER	2
12	115-270	RETAINING PIN	2
13	115-264	PATENTED INTERLOCK PIN	2
14	125-727	COMPRESSION SPRING	2
15	125-782	WASHER	2
16	141-299	LL 500 FRAME ASSEMBLY	1
17	141-298	LOWER MOUNT	1
18	110-950	LOWER PINNING SHAFT	1
19	140-252	REAR HINGE ASSEMBLY	1
20	NA.	LEG STYLE UPPER MOUNT	2
21	140-334	UPPER MOUNT SLIDER ASSEMBLY	2
22	130-012	5 "X 19" CYLINDER	1
23	141-268	SUBFRAME UPPER MOUNT	2
24	110-818	BOLTING ANGLE	1
25	110-598	UPPER MOUNT LOCK COLLAR	2
26	140-539	CONTAINS 19, 6, 7, 8, 9	

CYLINDER DISASSEMBLY SINGLE CYLINDER HOISTS

1: Clamp the cylinder in a device that will prevent rotation.
NOTE: Take care that distortion of the tube does not occur due to clamping.

2: With a spanner wrench turn the cylinder head counterclockwise to remove it from the tube.
NOTE: Heat may be required to loosen cylinder head. Only apply enough heat to melt lock tight and or rusted cylinder head. Excess heat may distort the tube.

3: Remove the ram, cylinder head and piston from the tube.

4: Clamp the ram in a device that will prevent rotation.
NOTE: Take care that distortion or scratching of the ram does not occur due to clamping.

5: Remove the nut holding the piston to the ram. Remove the piston and o-ring from the ram.

6: Remove the cylinder head from the ram. Remove and replace all seals, o-rings, and backup washers from inside the cylinder head. Remove and replace all seals, o-rings, and backup washers from the piston.

7: Apply a small amount of grease to all seals, o-rings, and backup washers in the cylinder head. Install the cylinder head on the ram. Replace the o-ring between the ram and the piston, install the piston onto the ram. Clean threads of the nut and ram with isopropyl alcohol and let dry. Apply red thread locker to the threads and tighten nut.

8: Apply a small amount of grease to the piston. Install the ram, cylinder head and piston into the outer tube.

9: Clean threads of the outer tube and cylinder head with isopropyl alcohol and let dry. Apply red thread locker to the threads and tighten cylinder head.

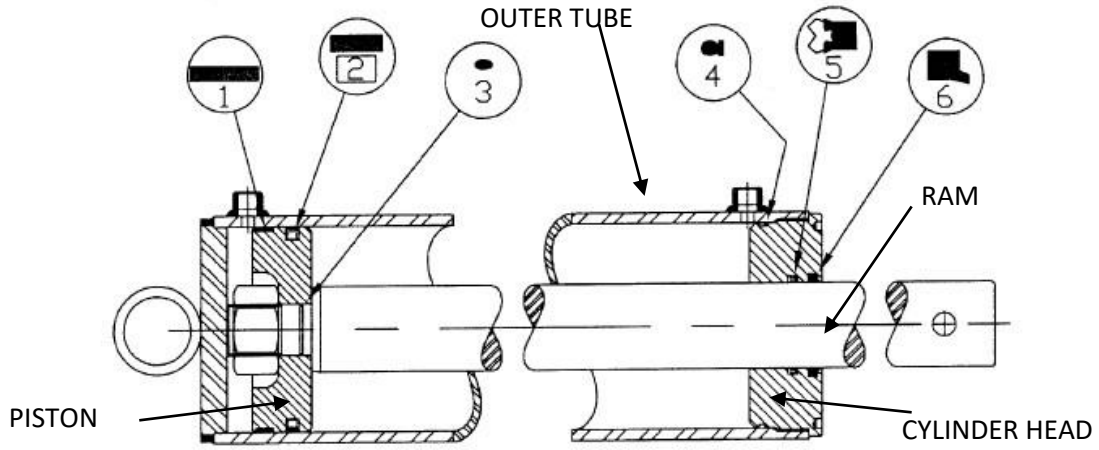

CYLINDER PART NO. 130-060
SEAL KIT PART NO. 130-164

CONTENTS OF SEAL KIT

ITEM	DESCRIPTION
1	WEAR RING
2	PISTON SEAL
3	O-RING
4	O-RING & BACK-UP
5	ROD SEAL
6	WIPER

HOIST WARRANTY

TAFCO EQUIPMENT COMPANY (TAFCO) WARRANTIES EACH HOIST TO BE FREE FROM DEFECTS IN MATERIAL AND WORKMANSHIP FOR A PERIOD OF 10 YEAR FROM DATE OF INSTALLATION.

TAFCO ACCEPTS NO RESPONSIBILITY FOR WARRANTY ON PUMPS, CYLINDERS, VALVES OR ANY OTHER PART NOT MANUFACTURED BY TAFCO. THEY ARE SUBJECT TO MANUFACTURER WARRANTY. TAFCO EQUIPMENT COMPANY WILL ASSIST OUR DEALERS IN OBTAINING WARRANTY ON SAID ITEMS BUT MANUFACTURER DETERMINES ELIGIBILITY AND MAKES THE FINAL DECISIONS.

TAFCO DOES NOT ASSIGN ANY OF IT DEALERS, DISTRIBUTORS OR AGENTS THE RIGHT OF WARRANTY ON ITS BEHALF. IF A DEALER OR DISTRIBUTOR IS PERFORMING A SERVICE, REPAIRS, OR RETURNS ON BEHALF OF THE PURCHASER SUCH PARTS, VALIDITY OR APPLICABILITY OF THE WARRANTY REGARDING SUCH PART(S) REMAINS SOLELY THE PREROGATIVE OF TAFCO AND NOT ITS AFOREMENTIONED AGENTS.

TAFCO'S OBLIGATION UNDER THIS WARRANTY IS LIMITED TO THE REPLACEMENT OR REPAIR OF ANY PART OR PARTS THEREOF, WHICH WITHIN THE WARRANTY PERIOD IS DEEMED WARRANTABLE, AND DOES NOT COVER LOSS OF USE, OR INCOME BECAUSE OF FAILURE.

THIS WARRANTY DOES NOT EXTEND TO ANY UNIT, OR PART THERE OF THAT HAS BEEN SUBJECTED TO MISUSE, NEGLECT, ACCIDENT, IMPROPER INSTALLATION, AND/OR LOADING OVER OR ABOVE WEIGHT RECOMMENDATIONS.

THIS WARRANTY DOES NOT EXTEND TO ANY UNIT, OR PART THAT HAS BEEN REPAIRED OR ALTERED WITHOUT TAFCO'S APPROVAL, OR TO WHICH ANY ACCESSORIES OTHER THAN TAFCO PRODUCTS HAVE BEEN AFFIXED, OR TO ANY UNIT NOT INSTALLED BY AN AUTHORIZED TAFCO DEALER OR DISTRIBUTOR.

ALL WARRANTY REPAIR OR REPLACEMENT, INCLUDING ANY OCCASION WHERE A UNIT OR PART MUST BE REPAIRED OR REPLACED IN THE FIELD, MUST BE PER TAFCO'S DIRECTION OR DETERMINED BY MUTUAL AGREEMENT AND PREAPPROVED IN ADVANCE OF ANY WORK BEING PERFORMED.

SHOULD TAFCO DETERMINE PARTS MUST BE RETURNED TO THE FACTORY FOR INSPECTION, ALL RETURNS MUST INCLUDE A TAFCO ASSIGNED RETURNED MERCHANDISE AUTHORIZATION NUMBER (RMA #), AND TRANSPORTATION CHARGES PREPAID BY SENDER.

TAFCO'S POLICY IS THAT A PROFIT SHOULD NOT BE MADE ON WARRANTY WORK, SINCE THIS IS A PART OF A DISTRIBUTOR OR DEALER FUNCTION. ALL PARTS WILL BE REPAIRED OR REPLACED AT TAFCO'S DISCRETION. ALL CLAIMS ARE HANDLED ON A CASE-BY-CASE BASIS.

FOR WARRANTY QUESTIONS CALL TOLL FREE 800-328-3189.

PLEASE HAVE YOUR PRODUCT SERIAL NUMBER AND ORIGINAL INVOICE READY TO REFERENCE WHEN CALLING