JOB No.	MASTER
DATE DRAWN	1/29/2018
DATE PRINTED	1/12/2021

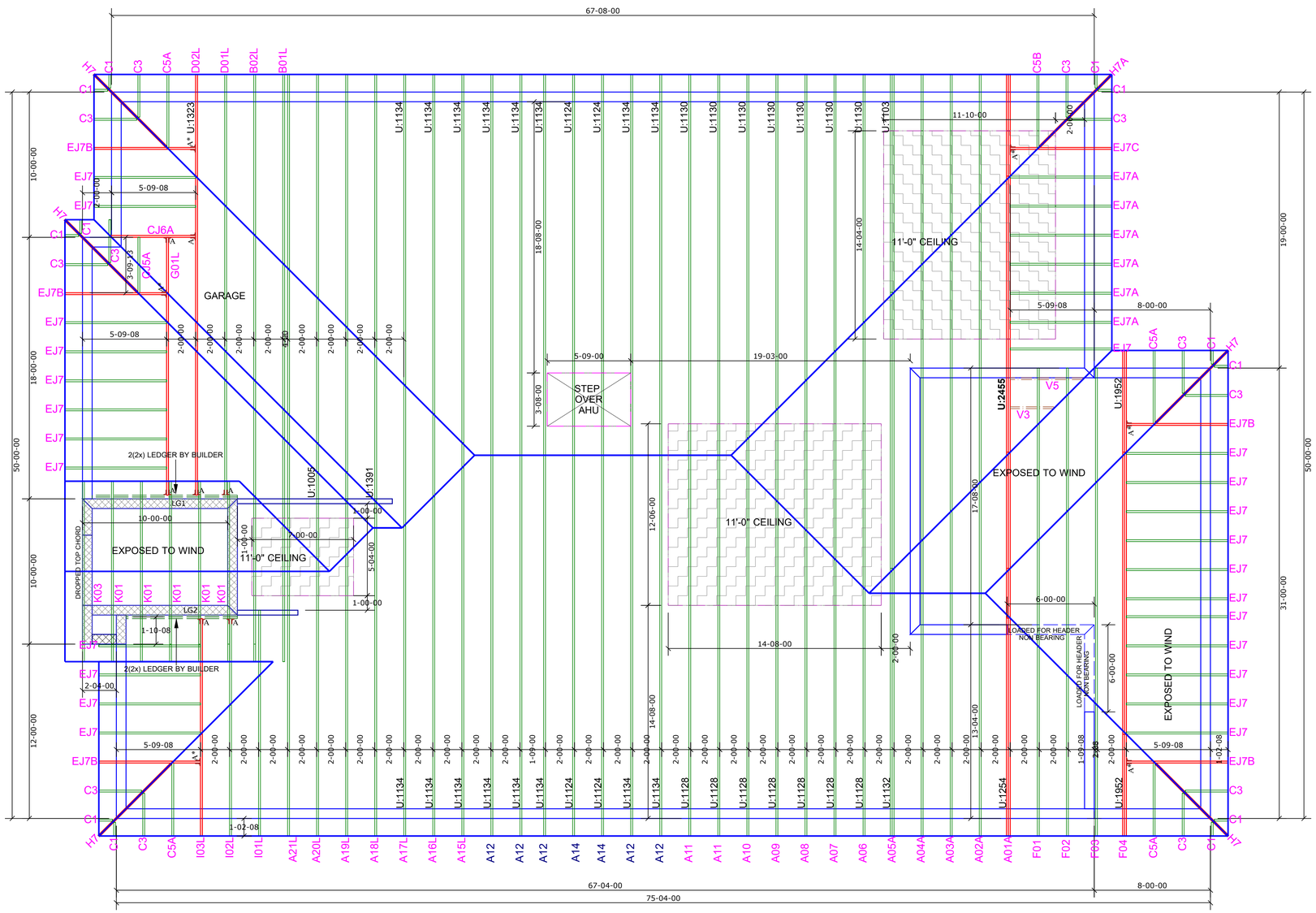

GENERAL TRUSS ENGINEERING CRITERIA & DESIGN LOADS	
DESIGN CODE	FBC2020/TPI2014
WIND CODE	MWFRS (Directional)/C-C HYBRID WIND ASCE 7-16
WIND LOAD	160 MPH
EXPOSURE CATEGORY	C
OCCUPANCY CATEGORY	II
IMPORTANCE FACTOR	1.0
WIND DURATION FACTOR	1.60
OPENING CONDITIONS	ENCLOSED

TRUSSES HAVE BEEN DESIGNED FOR A 10.0 PSF BOTTOM CHORD LIVE LOAD NONCONCURRENT WITH ANY OTHER LIVE LOADS

TRUSS LOADING	ROOF
TCLL	20 PSF
TCDL	20 PSF
BCLL	0 PSF
BCDL	10 PSF
TOTAL	50 PSF
DURATION	1.25
TCDL / TO RESIST UPLIFT	5 PSF
BCDL / TO RESIST UPLIFT	5 PSF

CAUTION!!!

DO NOT ATTEMPT TO ERECT TRUSSES WITHOUT REFERRING TO THE ENGINEERING DRAWINGS AND BSCI-B1 SUMMARY SHEETS.

ALL PERMANENT BRACING MUST BE IN PLACE PRIOR TO LOADING TRUSSES. (ie. SHEATHING, SHINGLES, ETC.)

ALL INTERIOR BEARING WALLS MUST BE IN PLACE PRIOR TO INSTALLING TRUSSES.

REFER TO FINAL ENGINEERING SHEETS FOR THE FOLLOWING.

1) NUMBER OF GIRDER PLIES AND NAILING SCHEDULE.

2) BEARING BLOCK REQUIREMENTS.

3) SCAB DETAILS (IF REQUIRED)

4) UPLIFT AND GRAVITY REACTIONS.

WARNING
BACK CHARGES WILL NOT BE ACCEPTED REGARDLESS OF FAULT WITHOUT PRIOR NOTIFICATION BY CUSTOMER WITHIN 48 HOURS AND INVESTIGATION BY Builders FirstSource. NO EXECPTIONS.

THE GENERAL CONTRACTOR IS RESPONSIBLE FOR ALL CONNECTIONS OTHER THAN TRUSS TO TRUSS, GABLE SHEAR WALL, AND CONNECTIONS. TEMPORAY AND PERMANENT BRACING, AND CEILING AND ROOF DIAPHRAM CONNECTIONS.

Hatch Legend

- 10'-0" BEARING HEIGHT
- 14'-0" BEARING HEIGHT

ROOF PITCH	5/12
CEILING PITCH	FLAT
TOP CHORD SIZE	2 x 4 MIN.
BOTTOM CHORD SIZE	2 x 4 MIN.
OVERHANG LENGTH	N/A
CANTILEVER	14 1/2"
END CUT	PLUMB
FLOOR TRUSS SPACING	N/A
ROOF TRUSS SPACING	24"
BUILDER	DR Horton
PROJECT	2540 L 160 C EXT LANAI LH
MODEL	2540
ADDRESS	--
CITY, STATE	--
LOT	--
COUNTY	--
DRAWN BY	D.W.
ENG. BY	D.W.

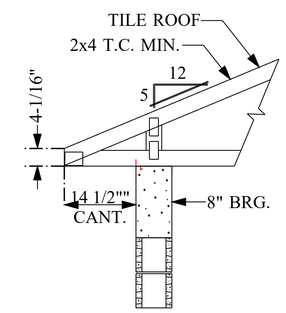

TYP. ROOF TRUSS END DETAIL
N.T.S.

REVISIONS

No.	DATE	NOTES	BY

SIMPSON CONNECTOR SCHEDULE

ROOF TRUSS

QTY	ID	MODEL	ROOF	UPLIFT	SYMBOL
6	A*	LUS24	895	490	a*
0					
7	A	HTU26	3200 / 3600	1250 / 1555	a^
0	B	HTU28	3895 / 4680	1235 / 2140	a^
0	C	HTU26-2	3600	1515 / 2175	a©
0	D	HTU28-2	4310 / 4680	1530 / 3485	a©
0	E	HGUS26-2	5320	2155	a#
0	F	HGUS28-2	7460	3235	a#
0	G	HGUS26-3	5230	2155	a ®
0	H	HGUS28-3	7460	3235	a ®
0	J	HGUS210-4	9100	4095	a ®
0	K	SPECIAL			

FLOOR TRUSS

QTY	ID	MODEL	FLOOR	UPLIFT	SYMBOL
0	A*	LUS24	895	490	a*
0	A	HTU26	3200 / 3600	1250 / 1555	a^
0	B	HTU28	3895 / 4680	1235 / 2140	a^
0	C	HTU26-2	3600	1515 / 2175	a©
0	D	HTU28-2	4310 / 4680	1530 / 3485	a©
0	E	HGUS26-2	5320	2155	a#
0	F	HGUS28-2	7460	3235	a#
0	G	HGUS26-3	5230	2155	a ®
0	H	HGUS28-3	7460	3235	a ®
0	J	HGUS210-4	9100	4095	a ®
0	L	HHUS46	2790	1550	a ®
0	M	THA422	1415 / 2245	N/A	a ®
0	N	THAC422	1415 / 2245	N/A	a ®
0	O	THA426	2435 / 2245	N/A	a ®

ACCESSORIES

3x8 NAIL ON PLATES
SEAT PLATES

SCREWS		BOLTS	
QTY	MODEL	QTY	MODEL
	SDS 1/4" x 3"		1/2" x 8" CARR. BOLTS
	SDS 1/4" x 4-1/2"		1/2" WASHERS
	SDS 1/4" x 6"		1/2" NUTS

A 3 HTU26 1 PLY TYP. C 3 HTU26-2 2 PLY TYP. L 1 HHUS46 FLOOR TYP.

MISCELLANEOUS

ROOF TRUSS		FLOOR TRUSS	
QTY	MODEL	QTY	MODEL

IMPORTANT

This Drawing Must Be Approved And Returned Before Fabrication Will Begin. For Your Protection Check All Dimensions And Conditions Prior To Approval Of Plan.
SIGNATURE BELOW INDICATES ALL NOTES AND DIMENSIONS HAVE BEEN ACCEPTED.

By _____ Date _____

6850 Taylor Road Punta Gorda, Fl. 33950
Phone: 941-575-2250 / Fax:941-575-0319

Engineer of Record for the Structure
Structural Systems of N. Fl, Inc.
Derek Bergener, PE 58552
1634 SE 47th Street #3
Cape Coral, FL 33904

This document has been reviewed for conformance with the design intent of the structure and specified design criteria.

☑ Accepted As-Is ☐ Accepted As Noted ☐ Revise and Resubmit

NOTES:
1) ALL DIMENSIONS ARE FEET-INCHES-SIXTEENTHS.
2) DO NOT CUT OR ALTER TRUSSES IN ANY WAY.
3) ALL REACTIONS ARE UNDER 5000 LBS. UNLESS NOTE OTHERWISE.
4) ALL UPLIFTS ARE UNDER 1000 LBS. UNLESS NOTED OTHERWISE.
5) FRAMING REQUIRED BELOW TRUSSES TO GET DESIRED CEILING CONDITIONS.
6) ONLY TRUSS TO TRUSS CONNECTIONS SUPPLIED W/ TRUSS PACKAGE.

Builders FirstSource

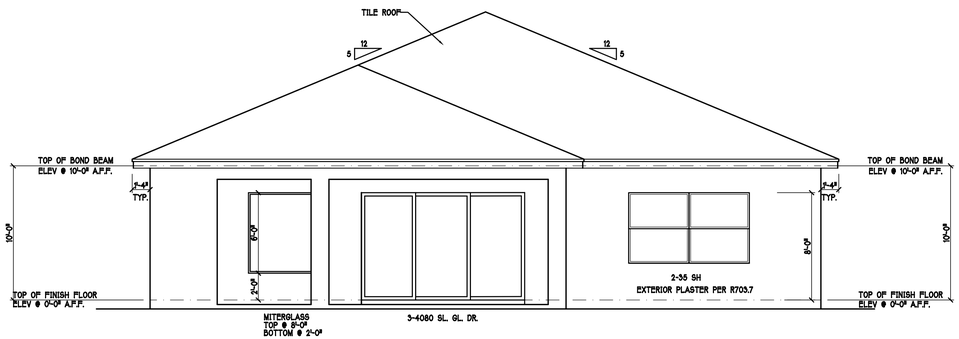

REAR ELEVATION: "L" SCALE: 3/16" = 1'-0"

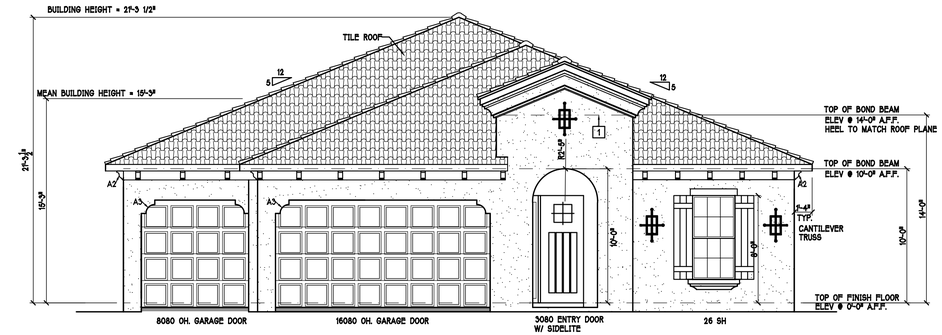

FRONT ELEVATION: "L" SCALE: 3/16" = 1'-0"

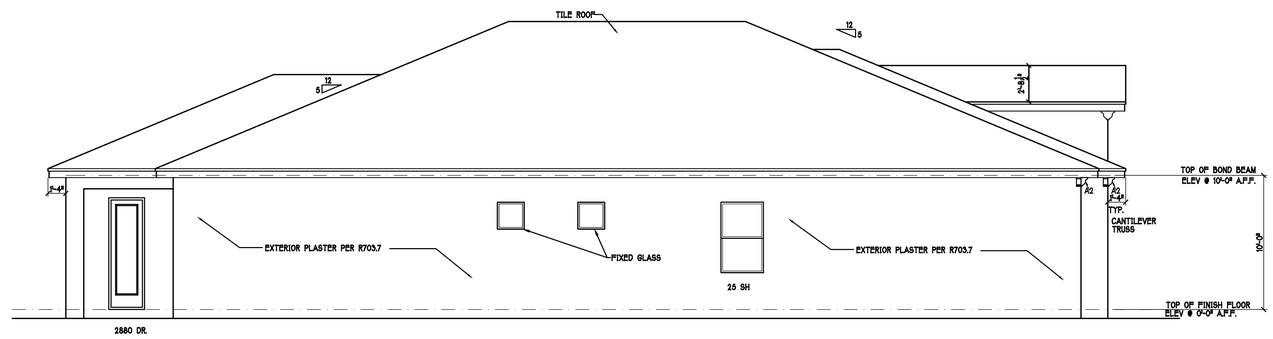

LEFT ELEVATION: "L" SCALE: 3/16" = 1'-0"

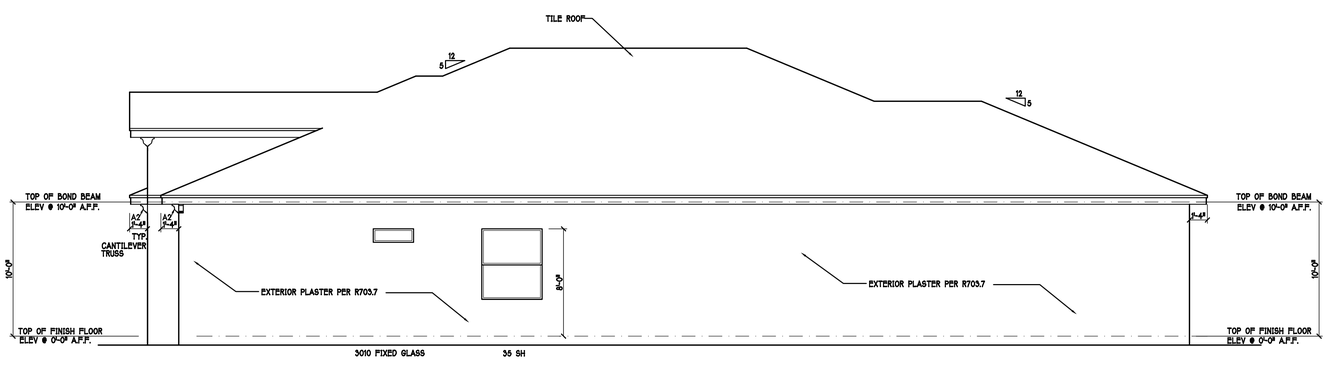

RIGHT ELEVATION: "L" SCALE: 3/16" = 1'-0"

FLORIDA BUILDING CODE 7TH EDITION

OCCUPANCY: FBC 310.5 RESIDENTIAL GROUP R-3 CONSTRUCTION TYPE: V-B (FIRE RESISTANCE RATING 0 HOURS, NOT SPRINKLED) CODES TO BE USED BY OTHER DESIGN PROFESSIONALS AND LICENSED CONTRACTORS: 2020 FLORIDA BUILDING CODE, 7TH EDITION: RESIDENTIAL; ACCESSIBILITY; ENERGY CONSERVATION; PLUMBING; MECHANICAL; AND FUEL GAS. ELECTRICAL IS CONTAINED BY REFERENCE WITHIN FBC RESIDENTIAL CHAPTER 34: NFPA 70-17 NATIONAL ELECTRICAL CODE.

1 MID-WALL WEEP SCREED AT WOOD-MASONRY INTERFACE. INSTALL STRICTLY PER MFG. INSTRUCTIONS

2 ROOF / WALL WEEP SCREED INSTALL STRICTLY PER MFG. INSTRUCTIONS

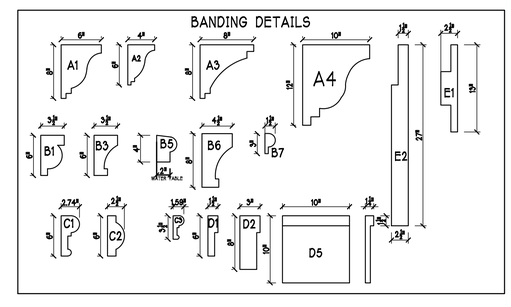

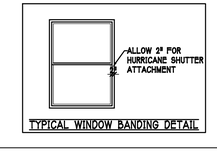

TYPICAL WINDOW BANDING DETAIL

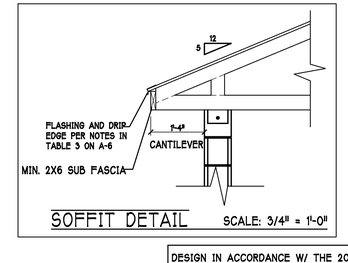

SOFFIT DETAIL SCALE: 3/4" = 1'-0"

DESIGN IN ACCORDANCE W/ THE 2020 FLORIDA BUILDING CODE- 7TH EDITION

D·R·HORTON America's Builder

Gulf Coast Drafting & Design
Phone (239) 540-1822
Fax (239) 540-7759

MODEL: 2540 L W/ EXT LANAI
RESIDENCE FOR: SPEC
LOT: 31
BLOCK:
SUBDIV: MAGNOLIA III 60s
ADDRESS: 3390 CHERRY PALM DR
G.C.D.#: 13740
D.R.H.#: 579970031

DATE: 11-01-21
DRAWN BY: JSL
CHECKED BY: JWC
REVISED:
PLAN: ELEVATION
SCALE: 3/16" = 1'-0"
SHEET# A-1 L

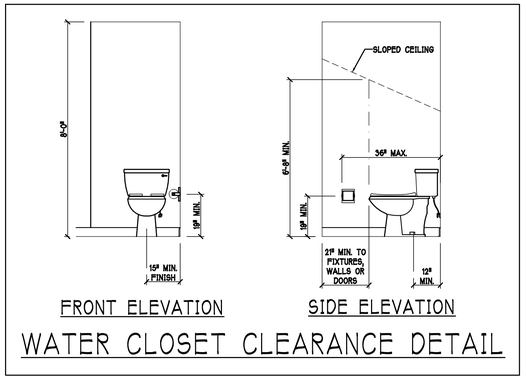

WATER CLOSET CLEARANCE DETAIL

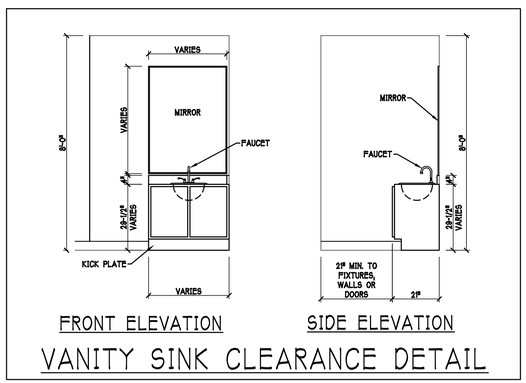

VANITY SINK CLEARANCE DETAIL

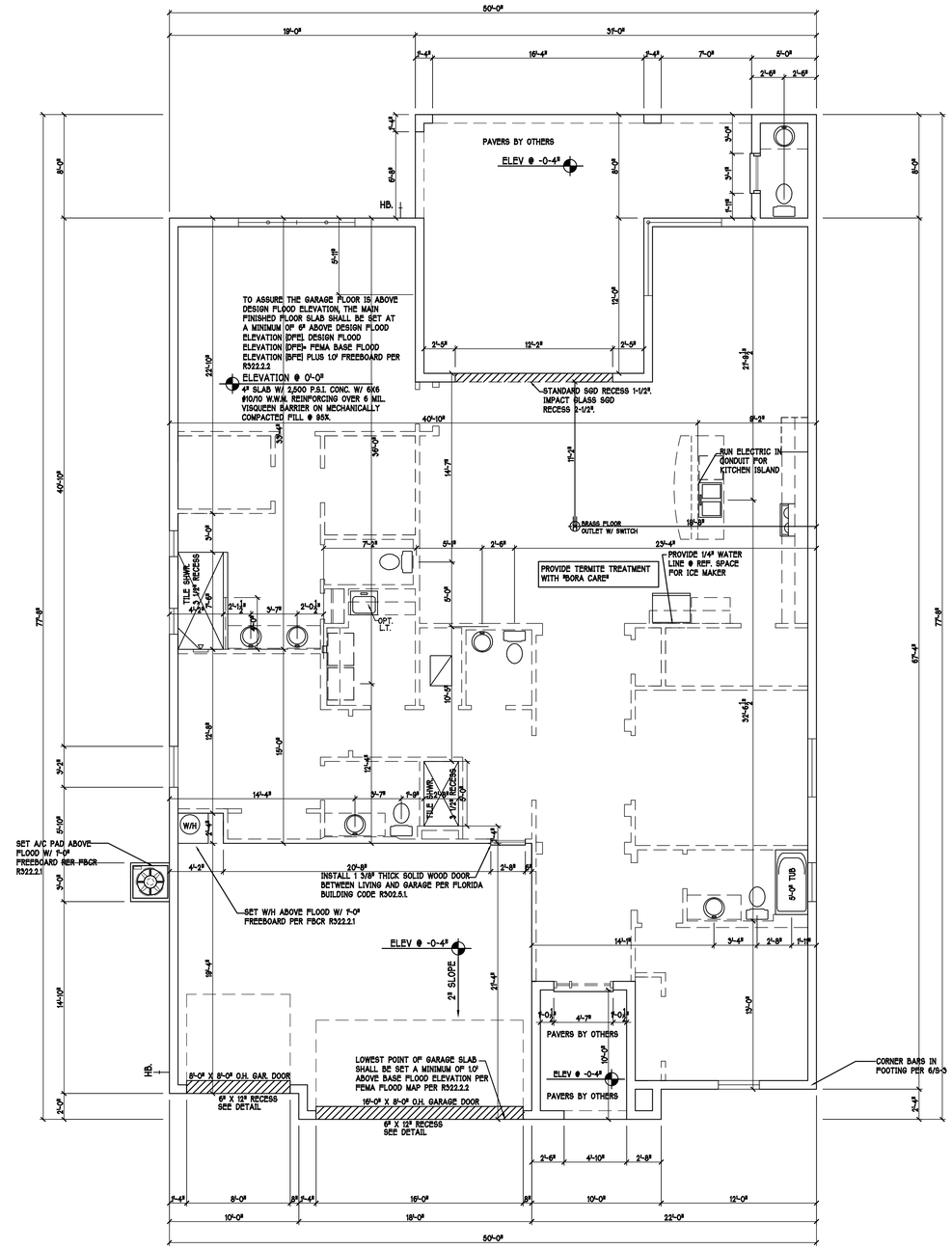

SLAB & PLUMBING PLAN: "L" SCALE: 3/16"=1'-0"

DESIGN IN ACCORDANCE W/ THE 2020 FLORIDA BUILDING CODE- 7TH EDITION

D.R.HORTON America's Builder

Gulf Coast Drafting & Design
Phone (239) 540-1822
Fax (239) 540-7759

MODEL: 2540 L W/ EXT LANAI
RESIDENCE FOR: SPEC

LOT: 31
BLOCK:
SUBDIV: MAGNOLIA III 60s
ADDRESS: 3390 CHERRY PALM DR
G.C.D.#: 13740
D.R.H.#: 579970031

DATE: 11-01-21
DRAWN BY: JSL
CHECKED BY: JWC
REVISED:
PLAN: SLAB & PLUMBING
SCALE: 3/16" = 1'-0"
SHEET# A-2 L

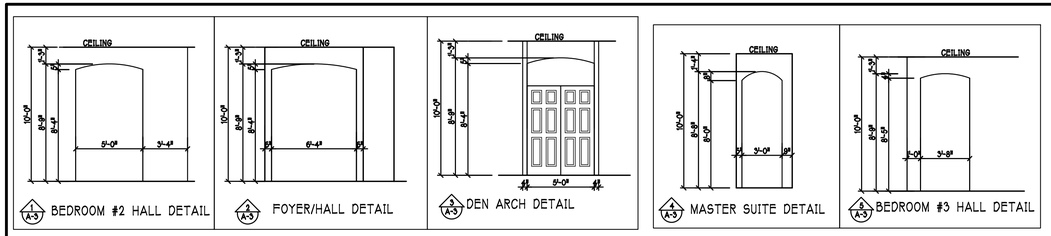

DOOR HEADERS		
6'-8" BIFOLD	HEADER HEIGHT	82" A.F.F.
6'-8" SWING	HEADER HEIGHT	82 1/2" A.F.F.
8'-0" SWING	HEADER HEIGHT	88 1/2" A.F.F.

PLAN NOTES

1) VERIFY ALL ROUGH OPENING DIMENSIONS FOR ALL WINDOWS AND DOORS
2) PROVIDE SAFETY GLAZING WITHIN 24" FROM EXIT PER FLORIDA BUILDING CODE R 308.4.2.
3) PROVIDE SAFETY GLAZING AT BATH / SHOWER . PER FLORIDA BUILDING CODE R 308.4.5.
4) NON BEARING INTERIOR FRAME WALLS SHALL BE FRAMED W/ WOOD OR METAL STUDS. SPACING SHALL NOT EXCEED 24" O.C. (NON BEARING WALLS ONLY)
5) PROVIDE DEAD WOOD IN ATTIC FOR OVERHEAD GARAGE DOOR HARDWARE
6) KITCHEN KNEE WALL TO BE FRAMED W/ TOP @ 34 1/4" 42 1/2" A.F.F. W/ RAISED BAR TOP VERIFY W/ BUILDER
7) INSTALL SMOOTH WALLS IN KITCHEN AND ALL BATHROOM AREAS
8) WHERE DRYWALL CEILING IS APPLIED TO TRUSSES AT 24" O.C. USE 5/8" DRYWALL OR 1/2" SAG RESISTANT PER SEC. R702.3.5
9) THE GARAGE SHALL BE SEPARATED FROM THE RESIDENCE & ATTIC BY NOT LESS THEN 1/2" GYPSUM BOARD APPLIED TO THE GARAGE SIDE. GARAGES BENEATH HABITABLE ROOMS SHALL BE SEPARATED WITH NOT LESS THAN 5/8" TYPE "X" GYPSUM BOARD OR EQUIVALENT. WHERE THE SEPARATION IS A FLOOR - CEILING ASSEMBLY THE STRUCTURE SUPPORTING THE SEPARATION SHALL ALSO BE PROTECTED BY NOT LESS THAN 1/2" GYPSUM BOARD OR EQUIVALENT
10) INSTALL 1 3/8" THICK SOLID WOOD DOOR BETWEEN LIVING AND GARAGE PER FLORIDA BUILDING CODE R302.5.1.
11) ALL WINDOWS INSTALL 72" ABOVE GRADE MUST COMPLY WITH R 312.2.1 MIN 24" SILL HEIGHT OR PROVIDED WITH AN APPROVED WINDOW FALL PREVENTION DEVICE
12) STUB OUT FOR GAS @ OUTDOOR KITCHEN, RANGE, WATER HEATER, AND DRYER. VERIFY WITH CONTRACTOR AND SUBDIV. SPECS. A SEPARATE PERMIT IS REQUIRED FOR GAS PIPING.
13) ALL CLOSET SHELVES TO BE 12". ALL PANTRY & LINEN TO BE (4)-16" SHELVES 18" O.F.F. WITH 15" INCREMENT.
14) ALL MECHANICAL AND ELECTRICAL EQUIPMENT TO BE INSTALLED AT 0" ABOVE FLOOD PLUS 1'-0" FREEBOARD.

CABINET BACKING		
KITCHEN	UPPER TOP @ 84"	BASE TOP @35"
MASTER BATH	UPPER	BASE- TOP @35"
GUEST BATH	UPPER	BASE- TOP @35"
LAUNDRY RM.	UPPER TOP @84"	BASE

BATHROOM NOTES

TB TOWEL BAR	ALL TUB DECKS @ 2" A.F.F.
TP TOILET PAPER	ALL BLOCKING TO BE PT IN SHOWERS

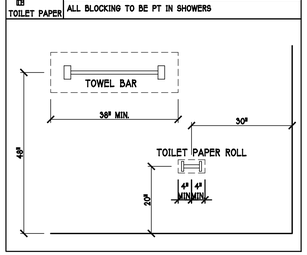

VINYL SHELF NOTES:

1) ALL CLOSET SHELVES TO BE 12"
2) ALL PANTRY & LINEN TO BE (4) 16" SHELVES 18" O.F.F. WITH 15" INCREMENT.

**** NOTE: ****

STUB OUT FOR GAS @ OUTDOOR KITCHEN, RANGE, WATER HEATER, AND DRYER. VERIFY WITH CONTRACT AND SUBDIV. SPECS.

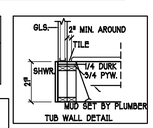

TUB WALL DETAIL

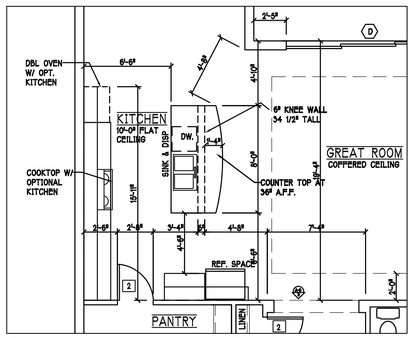

ALTERNATE KITCHEN OPTION: SCALE: 3/16"=1'-0"

D R HORTON						
MARK	SIZE CODE	PRODUCT DESCRIPTION	WIDTH	HEIGHT	COMMENTS	QTY
1	OVERHEAD	GARAGE DOOR	192	96		1
2	OVERHEAD	GARAGE DOOR	96	96		1
3	3080 ENTRY DR.	DISTINCTION	36	96		1
4	2880 ENTRY DR.	DISTINCTION	32	96		1
SEE NOTE 1						4

D R HORTON						
MARK	SIZE CODE	PRODUCT DESCRIPTION	WIDTH	HEIGHT	COMMENTS	QTY
A	35 SH		54	63	IMPACT	1
B	25 SH		38	63	IMPACT	1
C	36" X 12" F.G.		36	12	IMPACT	1
D	3-4080 SL. GL. DR.	SL. GL. DOOR	146	96	IMPACT	1
E	24" X 24" F.G.		24	24	FIXED GLASS IMPACT	2
F	26 SH		38	75	IMPACT	1
G	2-35 SH		108	63	IMPACT	1
H	72" X 72"	MITERED GLASS	72	72	TOP @ 8'-0" BOTTOM @ 2'-0"	1
I	12" X 96" SIDE LITE		12	96	IMPACT	1
SEE NOTE 1						11

OPT IMPACT GLASS MAY BE INSTALLED IN LIEU OF SHUTTERS VERIFY W/ CONTRACT

SQUARE FOOTAGE	
LIVING AREA	2565
GARAGE AREA	594
LANAI AREA	412
ENTRY AREA	73
POOL BATH AREA	40
TOTAL AREA	3684

INTERIOR DOOR SCHEDULE		
MARK	DOOR WIDTH	
1	3'-0"	PK. = POCKET DOOR
2	2'-8"	B.F. = BI-FOLD DOOR
3	2'-6"	B.P. = BI-PASS DOOR
4	2'-4"	
5	2'-0"	
6	1'-8"	
7	1'-6"	

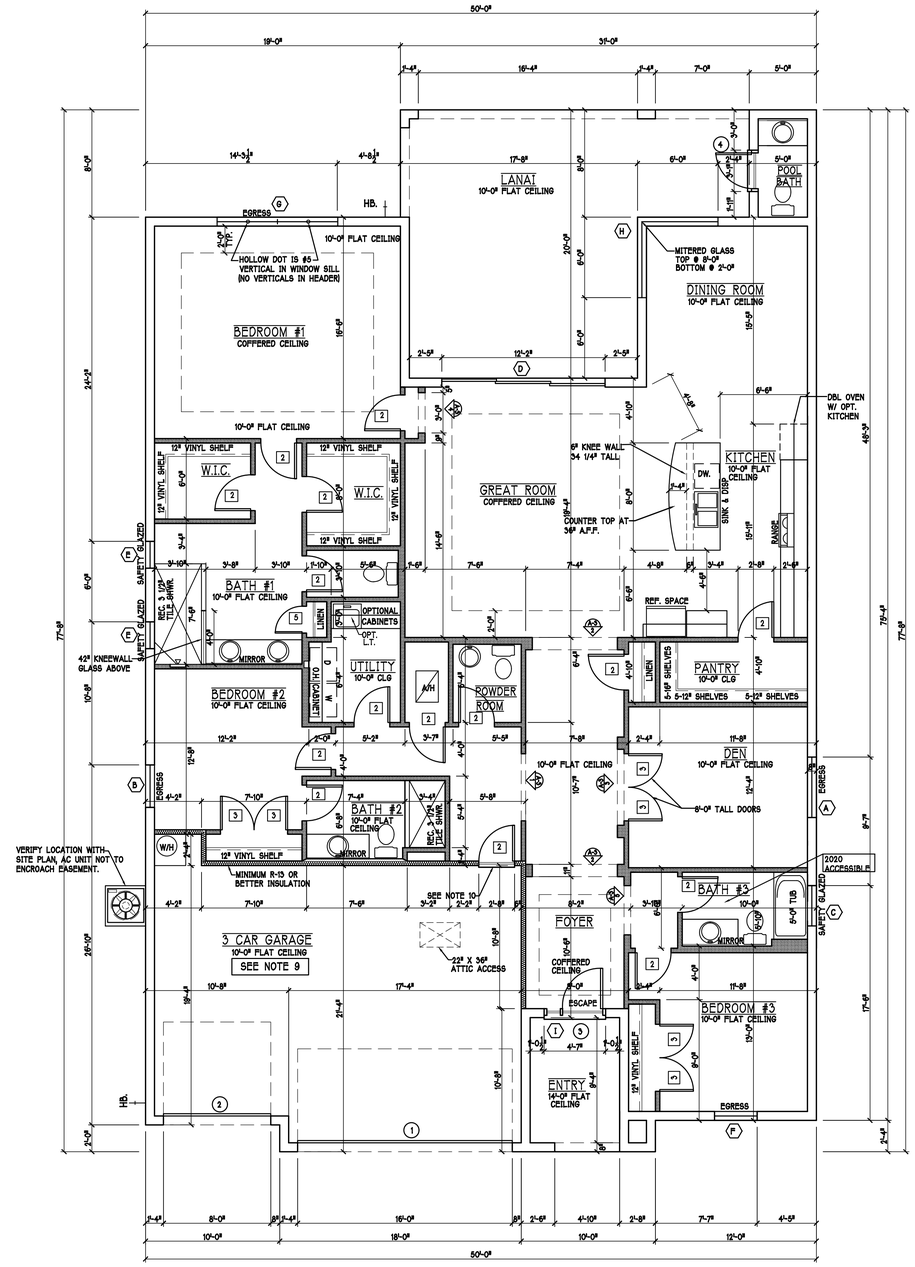

FLOOR PLAN "L" SCALE: 3/16"=1'-0"

DESIGN IN ACCORDANCE W/ THE 2020 FLORIDA BUILDING CODE- 7TH EDITION

D.R.HORTON America's Builder

Gulf Coast Drafting & Design
Phone (239) 540-1822
Fax (239) 540-7759

MODEL: 2540 L W/ EXT LANAI
RESIDENCE FOR: SPEC
LOT: 31
BLOCK:
SUBDIV: MAGNOLIA III 60s
ADDRESS: 3390 CHERRY PALM DR
G.C.D.#: 13740
D.R.H.#: 579970031

DATE: 11-01-21
DRAWN BY: JSL
CHECKED BY: JWC
REVISED:
PLAN: FLOOR
SCALE: 3/16" = 1'-0"
SHEET# A-3 L

MODEL 2540 L: ATTIC VENTILATION FBCR R806

COORDINATE VENTING REQUIREMENTS WITH ENERGY CALCULATIONS

			SOFFIT ONLY (1/150) (NO ROOF VENTS)			WITH ROOF VENTS (1/300) (R.V.)		
AREAS (SQ. FT.)			ATTIC VENTILATION REQUIRED			ATTIC VENTILATION REQUIRED		
MARK	ATTIC	SOFFIT	ATTIC AREA/150	REQ'D AIR FLOW OF SOFFIT	QUAD 4 SOFFIT HAS	ATTIC AREA/300	QUANTITY OF ROOF VENTS	MIN AIR FLOW OF SOFFIT
1st STORY	4030.9 SQ. FT.	347.6 SQ. FT.	26.87 SQ. FT.	7.73%	8.15%	-.-- SQ. FT.	-	-.-%
			"SOFFIT ONLY" QUALIFIES			ROOF VENTS ARE NOT REQUIRED		
			SOFFIT MODEL ACM QUAD 4, FULL VENT, NARROW PATTERN, 8.15% FREE AIR FLOW			ROOF VENT MODEL 32" BASE 22-3/8" BASE LOMANCO 770-D 0.97 SQ. FT. FREE AIR		

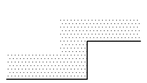

A / A-4 COFFER DETAIL "A" SCALE: N.T.S.

BEARING HEIGHT
- = BEARING @ 10'-0" A.F.F.
- = INTERIOR BEARING @ 10'-0" A.F.F.
- = BEARING @ 14'-0" A.F.F.

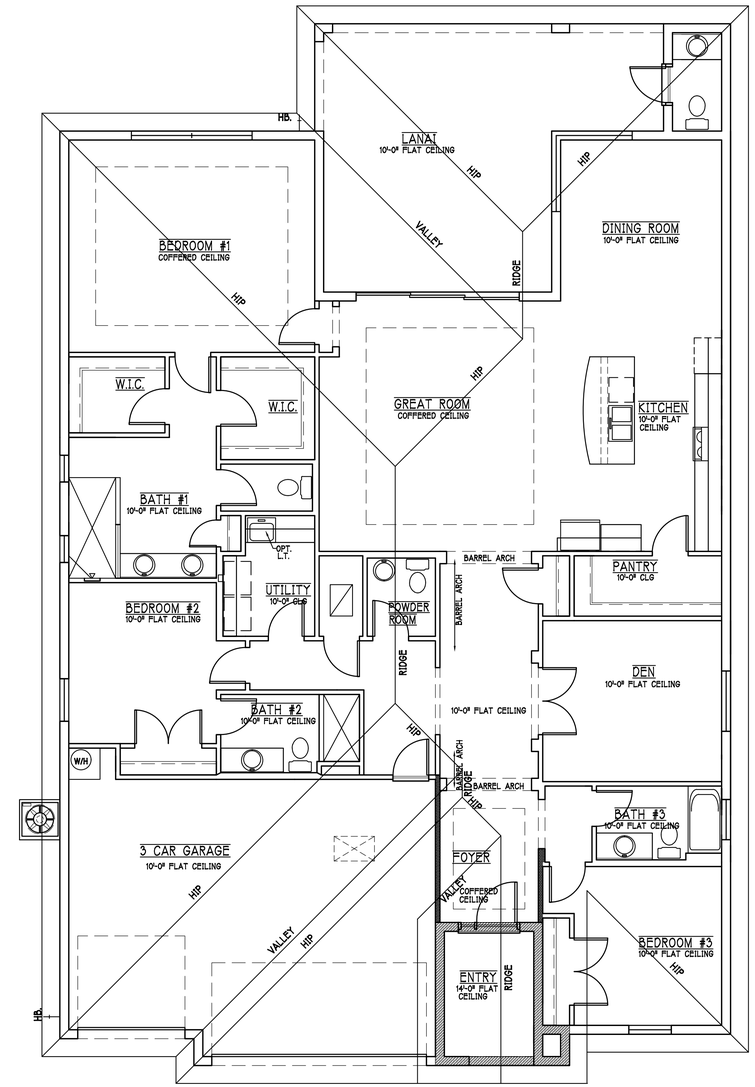

ROOF & CEILING PLAN: "L" SCALE: 3/16" = 1'-0"

DESIGN IN ACCORDANCE W/ THE 2020 FLORIDA BUILDING CODE- 7TH EDITION

D·R·HORTON America's Builder

Gulf Coast Drafting & Design
Phone (239) 540-1822
Fax (239) 540-7759

MODEL: 2540 L W/ EXT LANAI
RESIDENCE FOR: SPEC

LOT: 31 BLOCK:
SUBDIV: MAGNOLIA III 60s
ADDRESS: 3390 CHERRY PALM DR
G.C.D.#: 13740 D.R.H.#: 579970031

DATE: 11-01-21
DRAWN BY: JSL
CHECKED BY: JWC
REVISED:
PLAN: CEILING PLAN
SCALE: 3/16"=1'-0"
SHEET# A-4 L

ELECTRICAL LEGEND

	ELECTRICAL METER
	ELECTRICAL PANEL
J	120 V JUNCTION BOX
	SINGLE RECEPTACLE OUTLET
	220 V RECEPTACLE OUTLET
	4-PLEX RECEPTACLE OUTLET
	DUPLEX RECEPTACLE OUTLET
	1/2 SWITCHED DUPLEX OUTLET
	DUPLEX RECETACLE @ ELEV. A.F.F.
T	TIMER SWITCH
GFI	GFI SWITCH
P	DIMMER SWITCH
3	3 WAY SWITCH
	SINGLE POLE SWITCH
SD / SCD	AC/DC SMOKE DETECTOR TO BE INTERCONNECTED ANY RESIDENT HAVING A FOSSIL-BURNING HEATER OR APPLIANCE, A FIREPLACE, OR AN ATTACHED GARAGE SHALL HAVE AN OPERATIONAL CARBON MONOXIDE ALARM INSTALLED WITHIN 10 FEET OF EACH ROOM USED FOR SLEEPING PERPOSES. PER RULE 69-3.04.73 SD SMOKE DETECTOR] SCD [CARBON MONOXIDE/SMOKE DETECTOR
	TELEPHONE OUTLET
TV	TELEVISION RECEPTION OUTLET
	SURFACE MOUNTED CEILING LIGHT
	FLUSH MOUNTED LIGHT
	WALL MTD. BRACKET LIGHT
	DUPLEX FLOOD LIGHT
	EXHAUST FAN
	TRACK MTD. LIGHTS
	A/C DISCONNECT
	PUSH BUTTON
	DB= DOOR BELL
	KEYPAD
	4' FLUORESCENT LIGHT
	2' UNDER COUNTER LIGHT

Electrical Notes:

Install Arc-Fault circuit-Interrupters & Tamper-Resistant Receptacles shall be installed in dwelling unit. per NEC 210.12 & 406.11

All electric, electrical equipment and appliances to be set at or above base flood elevations plus 7-0" freeboard.

All outlets in wet areas and all exterior outlets to be GFI's

Install Phone & T.V per contract .

INSTALL ALL ELECTRICAL PER NEC 2017

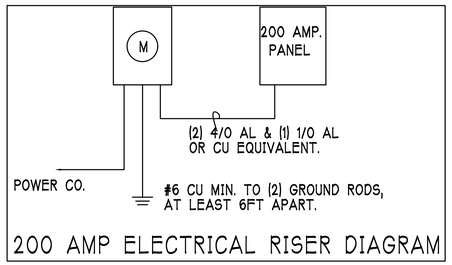

200 AMP ELECTRICAL RISER DIAGRAM

200 Amp Service

TAG	QUANTITY	PRODUCT	PRODUCT #
A	(31)	Flush Mounted Lt	
B	(3)	Vapors	
C	(1)	Pendant/Nook	
D	(X)	10" Mushrooms	
E	(2)	24" 3 Lt	
F	(2)	36" 4 Lt	
G	(X)	NOT USED	
H	(2)	Coach Lights	
J	(X)	Coach Lights	
K	(1)	J BOX	
L	(2)	4' Fluorescent	
M	(2)	2' Fluorescent	
N	(1)	5lt Chandelier	
O	(X)	3 Lt	
P	(3)	Pendant Light	

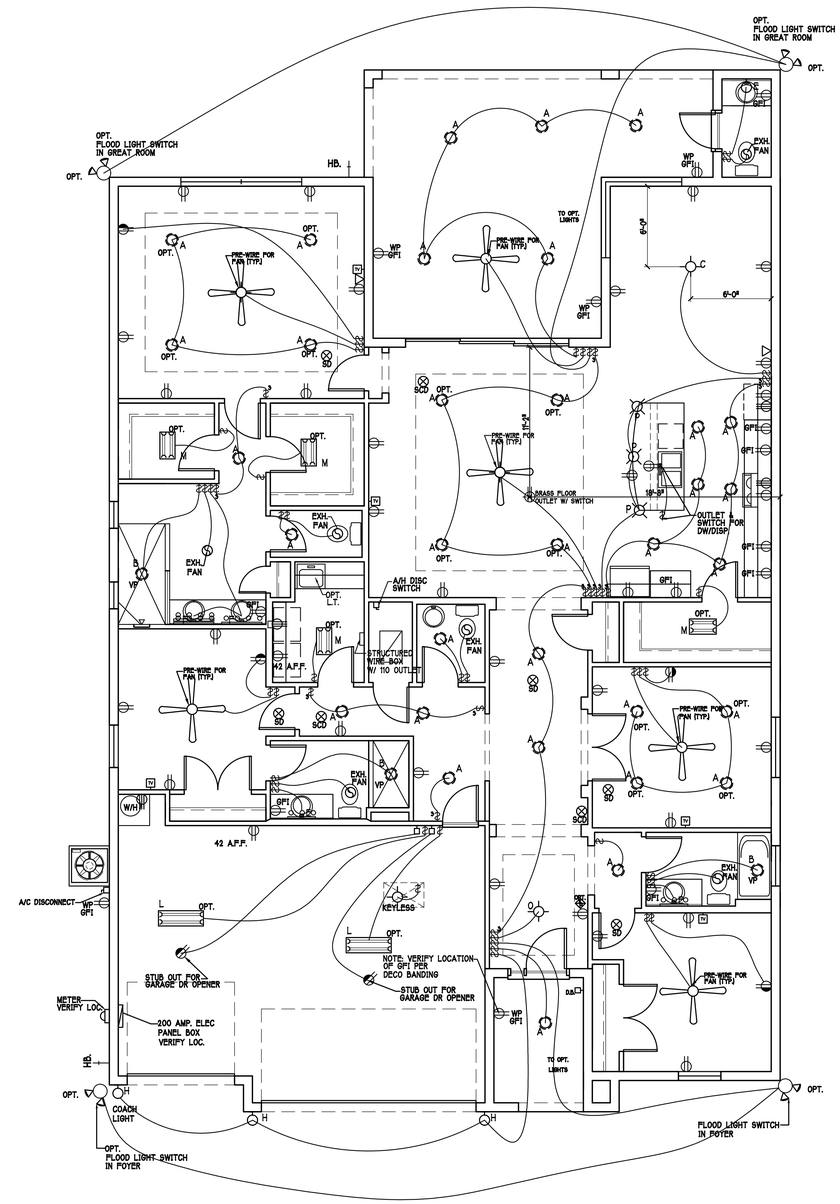

ELECTRICAL PLAN: "L" SCALE: 3/16" = 1'-0"

DESIGN IN ACCORDANCE W/ THE 2020 FLORIDA BUILDING CODE- 7TH EDITION

D·R·HORTON America's Builder

Gulf Coast Drafting & Design
Phone (239) 540-1822
Fax (239) 540-7759

MODEL: 2540 L W/ EXT LANAI
RESIDENCE FOR: SPEC

LOT: 31
BLOCK:
SUBDIV: MAGNOLIA III 60s
ADDRESS: 3390 CHERRY PALM DR
G.C.D.#: 13740
D.R.H.#: 579970031

DATE: 11-01-21
DRAWN BY: JSL
CHECKED BY: JWC
REVISED:
PLAN: ELECTRICAL
SCALE: 3/16" = 1'-0"
SHEET# A-5 L

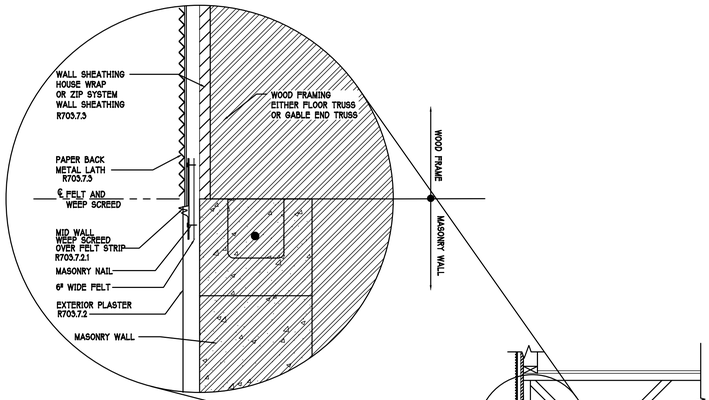

R703.7 EXTERIOR PLASTER

ASTM C926 AND ASTM C1063

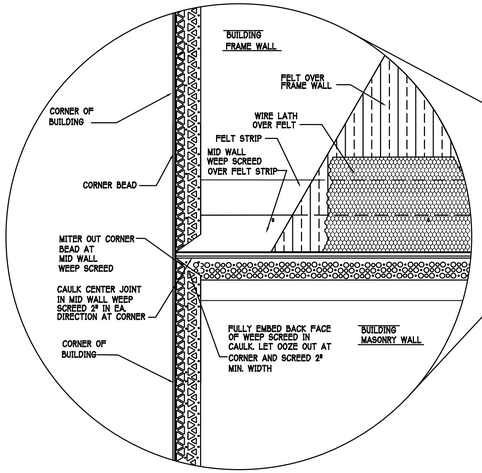

MID WALL WEEP SCREED DETAIL

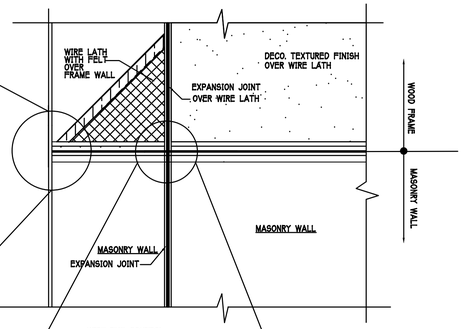

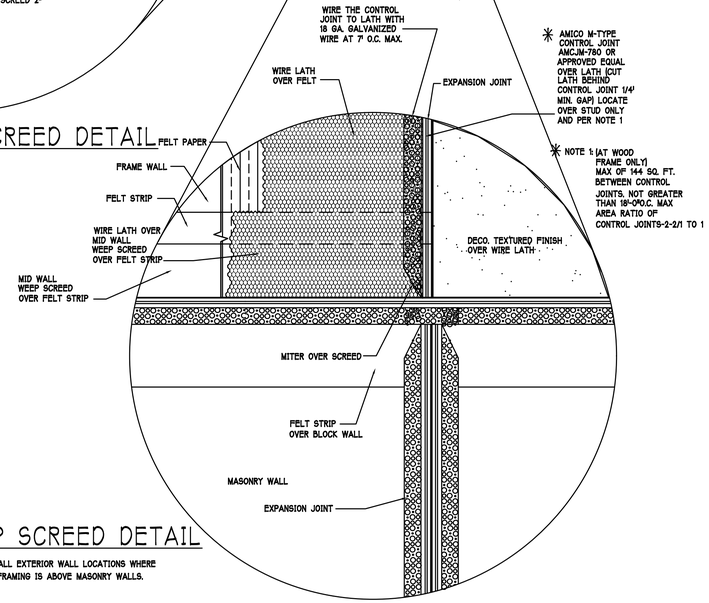

WEEP SCREED DETAIL

INSTALL AT ALL EXTERIOR WALL LOCATIONS WHERE
WOOD STUD FRAMING IS ABOVE MASONRY WALLS.

1

RESIDENTIAL SPECIFICATIONS

GENERAL NOTES

1. THE CONTRACTOR SHALL VERIFY ALL CONDITIONS AND DIMENSIONS AT THE JOB SITE PRIOR TO COMMENCING WORK. THE CONTRACTOR SHALL REPORT ALL DISCREPANCIES BETWEEN THE DRAWINGS AND EXISTING CONDITIONS TO THE DESIGNER PRIOR TO COMMENCING WORK.
2. THE CONTRACTOR SHALL SUPPLY, LOCATE AND BUILD INTO THE WORK ALL INSERTS, ANCHORS, ANGLES, PLATES, OPENINGS, SLEEVES, HANGERS, SLAB DEPRESSIONS AND PITCHES AS MAY BE REQUIRED TO ATTACH AND ACCOMMODATE OTHER WORK.
3. ALL DETAILS AND SECTIONS SHOWN ON THE DRAWINGS ARE INTENDED TO BE TYPICAL AND SHALL BE CONSTRUCTED TO APPLY TO ANY SIMILAR SITUATION ELSEWHERE IN THE WORK EXCEPT WHERE A DIFFERENT DETAIL IS SHOWN.
4. SUBSURFACE SOIL CONDITION INFORMATION IS NOT AVAILABLE FOUNDATIONS ARE DESIGNED FOR A SOIL BEARING CAPACITY OF 2,000 PSF. THE CONTRACTOR SHALL REPORT ANY DIFFERING CONDITIONS TO THE DESIGNER PRIOR TO COMMENCING WORK.
5. STRUCTURAL DRAWINGS SHALL BE USED IN CONJUNCTION WITH JOB SPECIFICATION AND HOUSE PLANS, MECHANICAL, ELECTRICAL, PLUMBING, AND SITE DRAWINGS, CONSULT THESE DRAWINGS FOR SLEEVES, DEPRESSIONS AND OTHER DETAILS NOT SHOWN ON STRUCTURAL DRAWINGS.
6. ALL SPECIFIED FASTENERS MAY ONLY BE SUBSTITUTED IF APPROVED BY THE ENGINEER IN WRITING, THE INSTALLATION OF THE FASTENERS SHALL BE IN ACCORDANCE WITH THE MANUFACTURERS SPECIFICATIONS. SIMPSON FASTENERS SPECIFIED MAY BE SUBSTITUTED WITH THE SAME QUANTITY AND EQUIVALENT STRENGTH PRODUCT.
7. TREATED WOOD REQUIREMENTS:- ALL WOOD EXPOSED TO WEATHER SHALL BE PROTECTED, PRESSURE TREATED, OR NATURALLY RESISTANT TO DECAY. ALL WOOD TOUCHING MASONRY OR CONCRETE SHALL BE ISOLATED, OR PRESSURE TREATED.
8. THE STRUCTURE IS DESIGNED TO BE SELF SUPPORTING AND STABLE AFTER THE BUILDING IS COMPLETE. IT IS THE CONTRACTOR'S SOLE RESPONSIBILITY TO DETERMINE ERECTION PROCEDURES AND SEQUENCES TO ENSURE SAFETY OF THE BUILDING AND ITS COMPONENTS DURING ERECTION. THIS INCLUDES THE NECESSARY SHORING, SHEETING, TEMPORARY BRACING, GUYS, OR TIE DOWNS.
9. CEILING DRYWALL INSTALLED WITHIN THE HOUSE TO TRUSSES SPACED 24" O.C. SHALL BE 5/8" DRYWALL OR 1/2" SAG RESISTANT PER SEC. 702.3.5
10. LANAI CEILINGS & COVERED ENTRY CEILINGS 1X4 STRIPPING @ 16" O.C. FASTENED WITH 2-8d NAILS TO EACH TRUSS. 5/8" EXTERIOR GYPBOARD CEILING FASTENED WITH 8d NAILS OR 1-5/8" DRYWALL SCREWS @ 6" oc EDGE AND FIELD.

2

GENERAL ROOF ASSEMBLY

ROOF SHEATHING FBCR TABLE R803.2.2

SHALL BE 19/32 APA RATED SHEATHING, EXPOSURE 1, SPAN RATING 40/20 OR BETTER. INSTALL PANELS WITH LONG DIMENSION PLACED PERPENDICULAR TO TRUSSES. A 1/8" SPACE BETWEEN ADJACENT SHEETS SHALL BE MAINTAINED. INSTALL "H" CLIPS AT UNSUPPORTED PANEL EDGES. SEE STRCUTURAL.

FLASHING
FLASHING SHALL BE ALUMINUM, ALUMINUM ZINC COATED STEEL .0179 INCHES THICK, 26 GAGE AZ50 ALUM ZINC, OR GALVANIZED STEEL .0179 INCHES THICK, 26 GAGE ZINC COATED G90. FLASHING SHALL BE INSTALLED IN ACCORDANCE WITH THE ZIP SYSTEM ROOF SHEATHING MANUFACTURERS PUBLISHED REQUIREMENTS. ALL FLASHING AND INSTALLATION SHALL CONFORM TO SECTION R905.2.8 (1 TO 5).

DRIP EDGE
DRIP EDGE SHALL BE PROVIDED AT ALL EAVES AND GABLES OF SHINGLE ROOFS, LAPPED A MINIMUM OF 3" @ JOINTS. THE OUTSIDE EDGE SHALL EXTEND A MINIMUM OF 1/2" BELOW SHEATHING AND THE INSIDE EDGE SHALL EXTEND BACK A MINIMUM OF 2". DRIP EDGE SHALL BE FASTENED AT NO MORE THAN 4" CENTERS. THERE SHALL BE A MINIMUM OF 4" WIDTH OF ROOF CEMENT INSTALLED OVER THE DRIP EDGE FLANGE.

3

ASPHALT SHINGLE ROOF SPEC'S

SHINGLES
30# felt shall be installed under asphalt shingles. All asphalt shingles shall have self sealing strips or be interlocking and comply with ASTM D 225 or D5462
Installation shall comply with the manufactures requirements for installation in the given Florida wind zone, as determined by ASTM D 3161

4

CLAY AND CONCRETE TILE ROOF SPECS

INSTALL PEEL AND STICK UNDERLAYMENT APPROVED FOR SINGLE LAYER APPLICATION UNDER TILE ROOF.
THE INSTALLATION OF CLAY AND CONCRETE TILE SHALL COMPLY WITH THE PROVISIONS OF R905.3 F.B.C.
MARKING: EACH ROOF TILE SHALL HAVE A PERMANENT MANUFACTURER'S IDENTIFICATION MARK.
APPLICATION SPECIFICATIONS: THE TILE MANUFACTURER'S WRITTEN APPLICATION SPECIFICATIONS SHALL BE AVAILABLE AND SHALL INCLUDE BUT NOT BE LIMITED TO THE FOLLOWING:
1. TILE PLACEMENT AND SPACING,
2. ATTACHMENT SYSTEM NECESSARY TO COMPLY WITH CURRENT WIND CODE,
A. AMOUNT AND PLACEMENT OF MORTAR
B. AMOUNT AND PLACEMENT OF ADHESIVE,
C. TYPE, NUMBER, SIZE, AND LENGTH OF FASTENERS AND CLIPS.
3. UNDERLAYMENT
4. SLOPE REQUIREMENT.

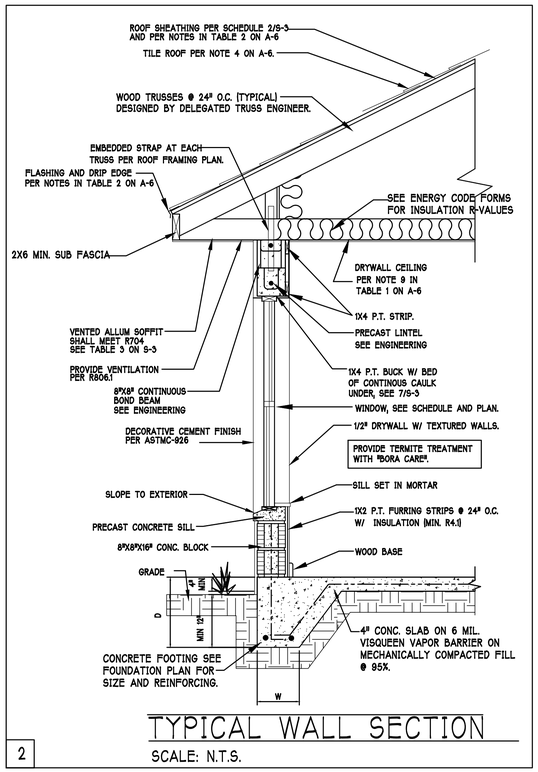

TYPICAL WALL SECTION

2

SCALE: N.T.S.

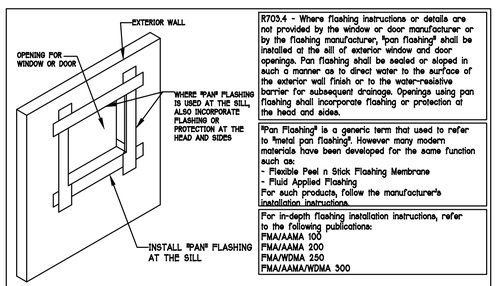

R703.4 - Where flashing instructions or details are not provided by the window or door manufacturer or by the flashing manufacturer, "pan flashing" shall be installed at the sill of exterior window and door openings. Pan flashing shall be sealed or sloped in such a manner as to direct water to the surface of the exterior wall finish or to the water-resistive barrier for subsequent drainage. Openings using pan flashing shall incorporate flashing or protection at the head and sides.

"Pan Flashing" is a generic term that used to refer to "metal pan flashing". However many modern materials have been developed for the same function such as:
- Flexible Peel n Stick Flashing Membrane
- Fluid Applied Flashing
For such products, follow the manufacturer's installation instructions.

For in-depth flashing installation instructions, refer to the following publications:
FMA/AAMA 100
FMA/AAMA 200
FMA/WDMA 250
FMA/AAMA/WDMA 300

THE FLASHING INSTRUCTIONS FROM THE WINDOW / DOOR MFR, OR THE FLASHING MFR, SHALL SUPERCEDE THIS DETAIL.

PAN FLASHING PER R703.4

SCALE: N.T.S.

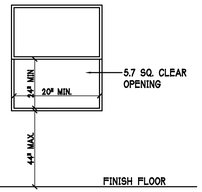

R310.2.1 MINIMUM OPENING AREA:- ALL EMERGENCY ESCAPE AND RESCUE OPENINGS SHALL HAVE A MINIMUM NET CLEAR OPENING OF 5.7 SQAURE FEET (0.530 m^2).

EXCEPTION:- GRADE FLOOR OPENINGS SHALL HAVE A MINIMUM NET CLEAR OPENING OF 5 SQUARE FEET (0.465 m^2).

R310.2.1 MINIMUM OPENING HEIGHT:- THE MINIMUM NET CLEAR OPENING HEIGHT SHALL BE 24 INCHES (610mm).

R310.2.1 MINIMUM OPENING WIDTH:- THE MINIMUM NET CLEAR OPENING WIDTH SHALL BE 20 INCHES (508mm).

R310.1.1 OPERATIONAL CONSTRAINTS:- EMERGENCY ESCAPE AND RESCUE OPENINGS SHALL BE OPERATIONAL FROM THE INSIDE OF THE ROOM WITHOUT THE USE OF KEYS OR TOOLS.

R310.2.3 WINDOW WELLS:- THE MINIMUM HORIZONTAL AREA OF THE WINDOW WELL SHALL BE 9 SQUARE FEET (0.84 m^2), WITH A MINIMUM HORIZONTAL PROJECTION AND WIDTH OF 36 INCHES (914mm). THE AREA OF THE WINDOW WELL SHALL ALLOW THE EMERGENCY ESCAPE AND RESCUE OPENING TO BE FULLY OPENED.

MINIMUM EGRESS WINDOW DETAIL

DESIGN IN ACCORDANCE W/ THE 2020
FLORIDA BUILDING CODE- 7TH EDITION

D·R·HORTON America's Builder

Gulf Coast Drafting
& Design
Phone (239) 540-1822
Fax (239) 540-7759

MODEL: 2540 L W/ EXT LANAI
RESIDENCE FOR: SPEC

LOT: 31
BLOCK:
SUBDIV: MAGNOLIA III 60s
ADDRESS: 3390 CHERRY PALM DR
G.C.D.#: 13740
D.R.H.#: 579970031

DATE: 11-01-21
DRAWN BY: JSL
CHECKED BY: JWC
REVISED:
PLAN: SECTION
SCALE: AS NOTED
SHEET# A-6 L

FOUNDATION PLAN

SCALE: 3/16" = 1'-0"

PLAN NOTES:
1) TOP OF GROUND FLOOR SLAB DATUM ELEVATION 0'-0".
2) 'F#' DENOTES CONTINUOUS WALL FOOTING TYPE PER SCHEDULE THIS SHEET.
3) (P) DENOTES PAD FOOTING AT CONCENTRATED LOADS PER SCHEDULE THIS SHEET.
4) PROVIDE #5 VERTICAL REINFORCING AT DOT LOCATIONS SHOWN ON PLAN FROM FOOTING TO BOND BEAM.
5) ALL DIMENSIONS ARE TO OUTSIDE FACE OF MASONRY WALLS. SOME SLAB EDGES MAY EXTEND BEYOND FACE OF WALL.
6) FOR DIMENSIONS OF ROUGH OPENINGS IN MASONRY WALLS, COORDINATE WITH WINDOW/DOOR SUPPLIER.
7) PROVIDE PRESSURE TREATED BUCKS AT WINDOWS / DOORS PER DETAIL 7/S-3.

WALL FOOTING SCHEDULE

USED	TYPE	LENGTH	WIDTH	DEPTH	BOTTOM REINFORCING	SHAPE
	F1	CONT.	1'-4"	0'-8"	2-#5	
	F2	CONT.	1'-8"	0'-10"	2-#5	
X	F3	CONT.	1'-0"	1'-8"	2-#5	
	F4	CONT.	1'-4"	1'-8"	2-#5	
X	F5	CONT.	1'-4"	1'-0"	2-#5	
X	F6	CONT.	1'-4"	1'-0"	2-#5	
X	F6A	CONT.	0'-8"	0'-8"	1-#5	
	TE	CONT.	0'-8"	0'-8"	1-#5	

NOTE: REINFORCING IN FOOTINGS SHALL BE CONTINUOUS AT CORNERS AND INTERSECTIONS. ADD CORNER BAR 25"x25" AT EACH LONGITUDINAL BAR, SEE 6/S-3.

PAD FOOTING SCHEDULE

USED	TYPE	LENGTH	WIDTH	DEPTH	BOTTOM REINF. LONG WAY	BOTTOM REINF. SHORT WAY	REMARKS
X	(A)	2'-6"	2'-6"	1'-0"	3-#5	3-#5	–
	(B)	3'-0"	3'-0"	1'-0"	4-#5	4-#5	–
X	(C)	3'-6"	3'-6"	1'-0"	4-#5	4-#5	–
	(D)	4'-0"	4'-0"	1'-0"	5-#5	5-#5	–
X	(E)	2'-6"	5'-0"	1'-0"	3-#5	6-#5	–

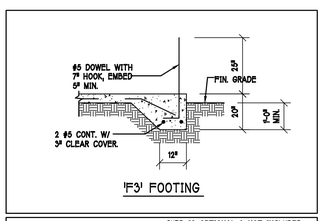

'F3' FOOTING

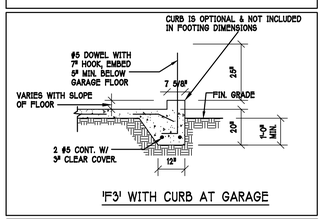

'F3' WITH CURB AT GARAGE

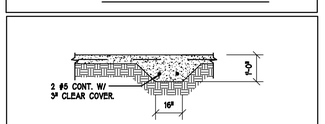

"F5" FOOTING

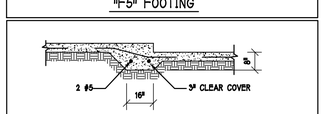

'F6' STEP DOWN

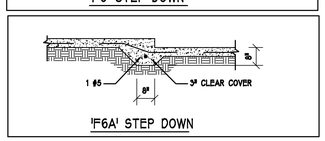

'F6A' STEP DOWN

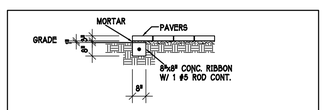

'P' PAVERS DETAIL ENTRY/LANAI

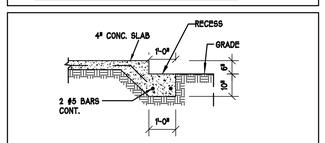

GARAGE DOOR RECESS (PAVERS)

SCALE: 1/2" = 1'-0"

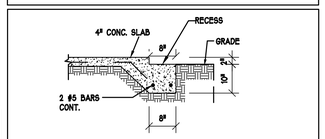

GARAGE DOOR RECESS (CONCRETE)

SCALE: 1/2" = 1'-0"

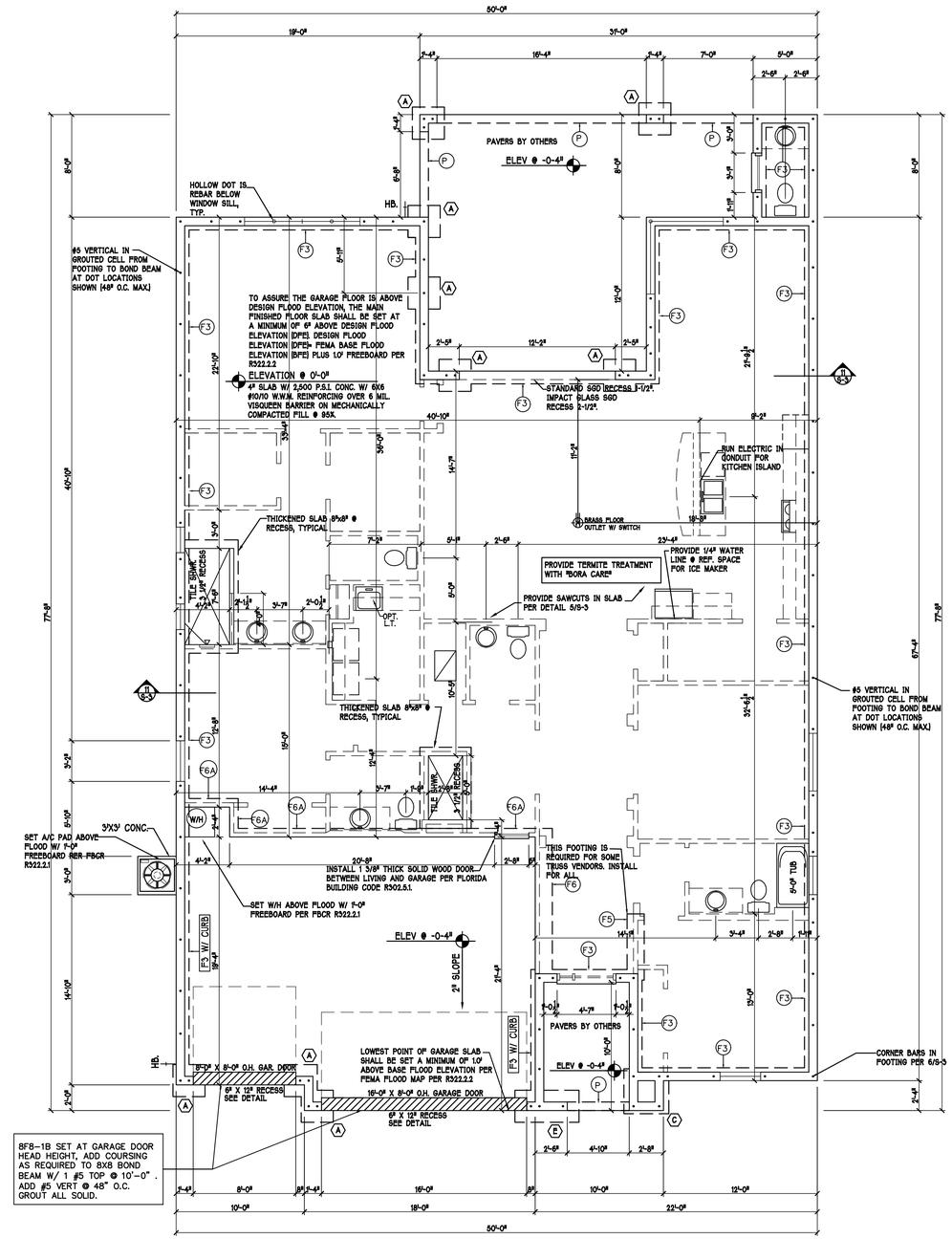

FOUNDATION PLAN: "L" SCALE: 3/16"=1'-0"

DESIGN IN ACCORDANCE W/ THE 2020 FLORIDA BUILDING CODE- 7TH EDITION

D·R·HORTON America's Builder

Gulf Coast Drafting & Design
Phone (239) 540-1822
Fax (239) 540-7759

STRUCTURAL ENGINEERING
STRUCTURAL ENGINEERS OF NORTH FLORIDA
1634 S.E. 47th ST SUITE #3
CAPE CORAL, FL 33904
(863)-9-ENGINEER
CA# 8829

DEREK M. BERGERON LICENSE No. 58552 STATE OF FLORIDA PROFESSIONAL ENGINEER

This item has been digitally signed by Derek Bergeron on the date adjacent to the seal. Printed copies of this document are not considered signed and sealed and the signature must be verified on any electronic copies.

MODEL: 2540 L W/ EXT LANAI
RESIDENCE FOR: SPEC
LOT: 31
BLOCK:
SUBDIV: MAGNOLIA III 60s
ADDRESS: 3390 CHERRY PALM DR
G.C.D.#: 13740
D.R.H.#: 579970031

DATE: 11-01-21
DRAWN BY: JSL
CHECKED BY: JWC
REVISED:
PLAN: FOUNDATION
SCALE: 3/16" = 1'-0"
SHEET#: S-1 L

TRUSS STRAPPING TO MASONRY

INSTALL META16 AT ALL TRUSSES TO 1450 lb UPLIFT. FOR HIGHER UPLIFTS, SEE NOTES ON PLAN.

MAX TRUSS UPLIFT (LBS)	STRAP/ANCHOR Valid lengths x/x/x	FASTENERS
1450 (1 PLY)	(1)META16/18/20	(8) 0.148x1-1/2", EMBED 4"
1810 (1 PLY)	(1)HETA16/20	(9) 0.148x1-1/2", EMBED 4"
1875 (1 PLY)	(2)META16/18/20	(10) 0.148x1-1/2", EMBED 4"
1920 (1 PLY)	(2)HETA16/20	(10) 0.148x1-1/2", EMBED 4"
2120 (1 PLY)	(1)HHETA16/20	(10) 0.148x1-1/2", EMBED 4"
1795 (2 or 3 PLY)	(2)META16/18/20	(14) 0.162x3-1/2", EMBED 4"
2365 (2 or 3 PLY)	(2)HETA16/20	(12) 0.162x3-1/2", EMBED 4"
3965/DF/SP (2 PLY)	MGT	(22) 0.148X3" ATR, EPOXY 12"
3000/DF/SP (1 PLY 2x4)	HTT4	(18) 0.148x1-1/2", 5/8" ATR, EPOXY 12"
4455/DF/SP (1 PLY 2x6)	HTT4	(18) SD#10x1-1/2", 5/8" ATR, EPOXY 12"
4235/DF/SP (2 PLY 2x4)	HTT4	(18) 0.162x2-1/2", 5/8" ATR, EPOXY 12"
4555/DF/SP (1 PLY 2x6)	HTT5	(26) SD#10x1-1/2", 5/8" ATR, EPOXY 12"
4670/DF/SP (2 PLY 2x4)	HTT5	(26) 0.148X3", 5/8" ATR, EPOXY 12"
5445/DF/SP (2 PLY 2x4)	HTT5KT	(26) SD#10x2-1/2, 5/8" ATR, EPOXY 18"
10690/DF/SP (2 PLY)	(1)HGT-2	(16) 0.148x3", (2) 3/4" ATR, EPOXY 12"
10790/SYP (3 PLY)	(1)HGT-3	(16) 0.148x3", (2) 3/4" ATR, EPOXY 12"

NOTES:
1) PROVIDE A STRAP FROM THE ABOVE LIST AT EACH ROOF TRUSS BEARING POINT, BASED ON THE TRUSS UPLIFT VALUES IN THE SIGNED AND SEALED TRUSS DESIGN PACKAGE AND SUITABLE FOR THE GEOMETRY. EMBED STRAP ON ℄ OF WALL.
2) ANY OF THE VALID LENGTHS SHOWN MAY BE USED IN PLACE OF THE LENGTH SPECIFIED ON PLAN.
3) CONNECTORS ARE SIMPSON STRONG TIE. ALL CONNECTORS SHALL BE INSTALLED IN STRICT ACCORDANCE WITH SIMPSON PRINTED INSTRUCTIONS. SUBSTITUTIONS MUST BE APPROVED IN WRITING BY THE ENGINEER OF RECORD.
4) WHERE EMBEDDED STRAPS ARE MISSING, OR MIS-LOCATED, INSTALL RETROFIT STRAP PER 10/S-3 PER UPLIFT IN TRUSS ENGINEERING.

SIMPSON CATALOG C-C-2019

TRUSS STRAPPING TO STUD WALL/WOOD BEAM

INSTALL AT ALL TRUSSES TO 850 lb UPLIFT. FOR HIGHER UPLIFTS, SEE NOTES ON PLAN.

MAX TRUSS UPLIFT (LBS)	STRAP(S) Valid lengths x/x/x	FASTENERS
850	(1)MTS16/20/30	(14) 0.148x1-1/2" or 3" EACH STRAP
1700	(2)MTS16/20/30	
2550	(3)MTS16/20/30	
1125	(1)HTS20/24/30	(24) 0.148x1-1/2" OR (20) 0.148x3" EACH STRAP
2250	(2)HTS20/24/30	
3375	(3)HTS20/24/30	
4500	(4)HTS20/24/30	

NOTES:
1) PROVIDE A STRAP FROM THE ABOVE LIST AT EACH ROOF TRUSS BEARING POINT, BASED ON THE TRUSS UPLIFT VALUES IN THE SIGNED AND SEALED TRUSS DESIGN PACKAGE.
2) ANY OF THE VALID LENGTHS SHOWN MAY BE USED IN PLACE OF THE LENGTH SPECIFIED ON PLAN.
3) 1-1/2" NAIL SHALL BE USED IN 1 PLY LUMBER, 2 PLY LUMBER IS REQUIRED FOR 3" NAILS.
4) CONNECTORS ARE SIMPSON STRONG TIE. ALL CONNECTORS SHALL BE INSTALLED IN STRICT ACCORDANCE WITH SIMPSON PRINTED INSTRUCTIONS.

SIMPSON CATALOG C-C-2019

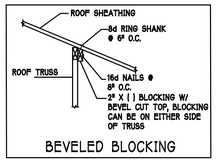

BEVELED BLOCKING

PLAN NOTES:

1) ROOF TRUSS BEARING ELEVATION VARIES, SEE LEGEND.
2) ROOF FRAMING SHALL BE WOOD TRUSSES DESIGNED BY A DELEGATED TRUSS ENGINEER PER DESIGN CRITERIA ON SHEET S-3.
3) PROVIDE STRAPPING AT TRUSSES PER NOTES ON THIS SHEET.
4) FOR NAILING OF ROOF DECK, SEE 1 AND 2 ON S-3.
5) (8F8-0B) etc, DENOTES PRECAST LINTEL ABOVE DOOR/WINDOW OPENING PER SCHEDULE THIS SHEET.
6) AT TRUSS BEARING, PROVIDE 8x8 MASONRY BOND BEAM W/ 1 #5 CONTINUOUS, SEE DETAIL 13/S-3.

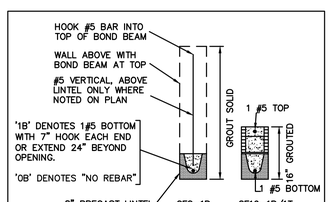

PRECAST LINTEL SCHEDULE

AT SWING DOORS, USE 2" RECESS STYLE LINTEL IF NEEDED FOR ROUGH OPENING.
LINTELS BEAR 4" MIN. EACH END

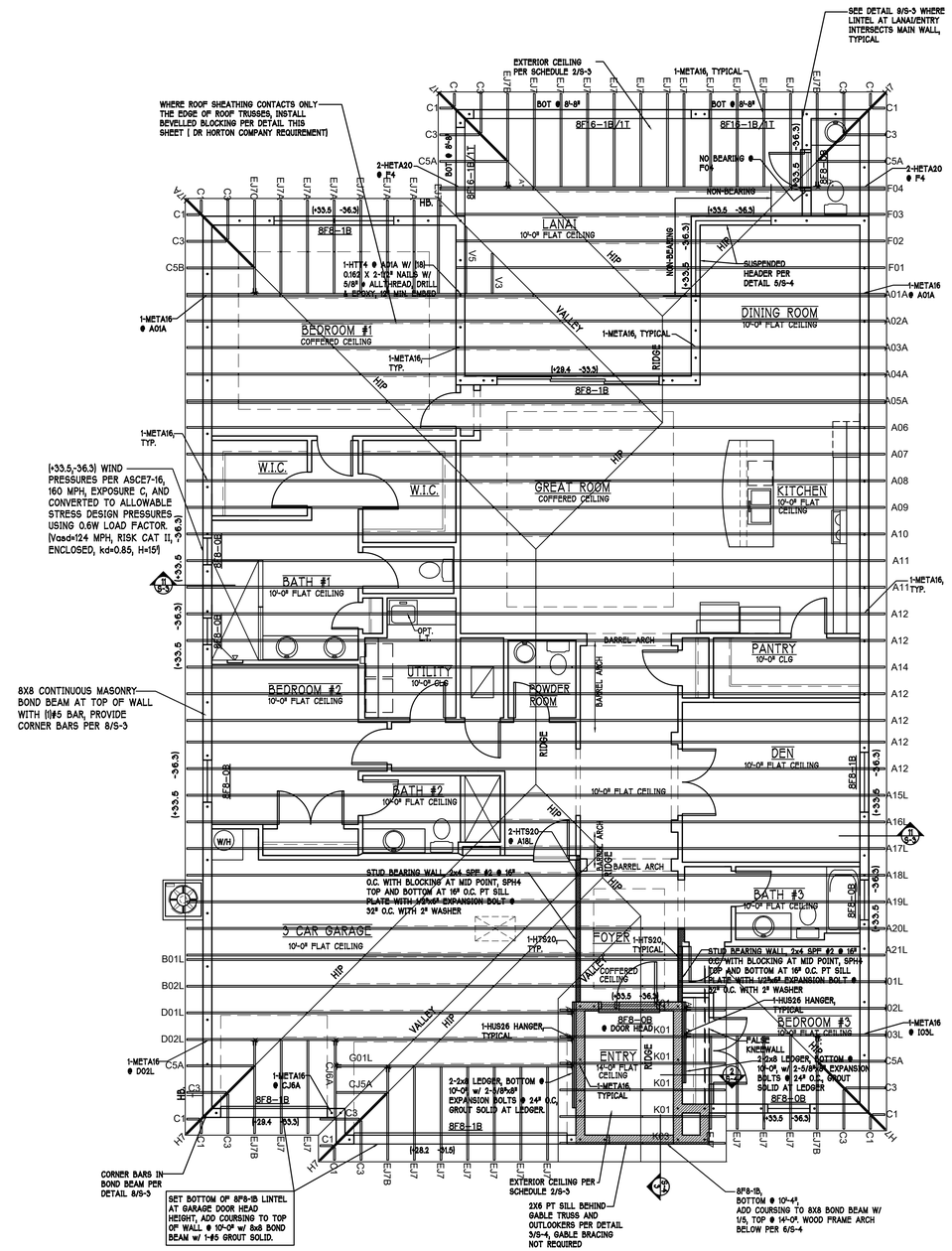

ROOF FRAMING PLAN: "L" SCALE: 3/16" = 1'-0"

TRUSS BEARING CONDITIONS AND STRAPPING IS BASED ON TRUSS LAYOUT PREPARED BY BUILDERS FIRST SOURCE, JOB #: MASTER, DATED: 01/29/18, REVISION: 01/12/21

BEARING HEIGHT

- = BEARING @ 10'-0" A.F.F.
- = INTERIOR BEARING @ 10'-0" A.F.F.
- = BEARING @ 14'-0" A.F.F.

DESIGN IN ACCORDANCE W/ THE 2020 FLORIDA BUILDING CODE- 7TH EDITION

D.R.HORTON America's Builder

Gulf Coast Drafting & Design
Phone (239) 540-1822
Fax (239) 540-7759

STRUCTURAL ENGINEERING
STRUCTURAL SYSTEMS
1624 SE 47th ST SUITE 4
CAPE CORAL, FL 33904
(239) 549-4554
CA 8629

DEREK W. BERGENER LICENSE No. 58552 STATE OF FLORIDA PROFESSIONAL ENGINEER

MODEL: 2540 L W/ EXT LANAI
RESIDENCE FOR: SPEC
BLOCK:
LOT: 31
SUBDIV: MAGNOLIA III 60s
ADDRESS: 3390 CHERRY PALM DR
G.C.D.#: 13740 D.R.H.#: 579970031

DATE: 11-01-21
DRAWN BY: JSL
CHECKED BY: JWC
REVISED:
PLAN: ROOF
SCALE: 3/16" = 1'-0"
SHEET# S-2 L

TABLE R803.2.3.1 – NAIL SPACING BASED ON SPECIFIC GRAVITY OF RAFTER/TRUSS: ALL TRUSS TOP CHORDS AND FIELD ROOF FRAMING SHALL BE SOUTHERN PINE, SPECIFIC GRAVITY=0.55 (EXCEEDS SG=0.42 AND 0.49 OF TABLE R803.2.3.1).

ENSURE THAT ALL NAILS PENETRATE THE TOP CHORD OF THE TRUSS WITHOUT SPLITTING.

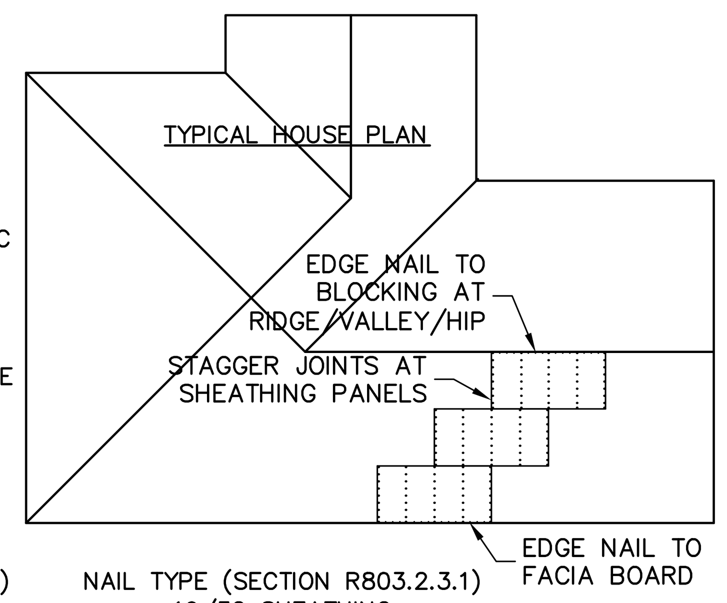

NAIL SPACING (TABLE R803.2.3.1) WIND SPEED / EXPOSURE

160/B, 160/C, 170/B	170/C
NAIL SPACING: 6" O.C. EDGE 6" O.C. FIELD	NAIL SPACING: 4" O.C. EDGE 4" O.C. FIELD

NAIL TYPE (SECTION R803.2.3.1) 19/32 SHEATHING

2½" x 0.131" RING SHANK OR 3" x 0.120" RING SHANK (PER ASTM F1667 RSRS-03 & 04)

1 NAILING OF ROOF SHEATHING
SCALE: NTS

SHEATHING SCHEDULE	
EXTERIOR STUD WALL	FLOOR
7/16" ZIP SYSTEM WALL SHEATHING BY HUBER ENGINEERED WOODS LLC, NAILED W/ 8d COMMON WIRE @ 6" O.C. EDGE AND 6" O.C. FIELD. PROVIDE 2x4 BLOCKING AT ALL JOINTS. INSTALL SHEATHING AND SEAM TAPE IN STRICT ACCORDANCE WITH MFR. WRITTEN INSTRUCTIONS. NOTE: SHEARWALLS 'SW', IF NOTED ON PLAN, MAY HAVE OTHER REQUIREMENTS.	APA RATED STURDI-FLOOR, EXPOSURE 1, TONGUE & GROOVE EDGES, SPAN RATING 48/24 OR BETTER, GLUE AND NAIL W/ 10d COMMON @ 6" O.C. EDGE & FIELD
	EXTERIOR CEILING
	1) 1x4 STRIPPING @ 16"OC w/ 2-8d NAILS TO EACH TRUSS, ⅝" EXTERIOR GYPBOARD CEILING, FASTEN w/8d NAILS OR 1⅝" DRYWALL SCREWS @ 6"OC EDGE & FIELD. 2) ⅜" BC PLYWOOD NAILED w/ 6d COMMON @ 6" OC EDGE & FIELD.
ROOF – PER FBCR TABLE 803.2.2	
19/32 CLASS A.P.A. RATED SHEATHING, EXPOSURE 1, SPAN RATING 40/20. FASTEN WITH RING SHANK NAILS PER DETAIL 1/S-3 (WHEN ZIP BRAND ROOF SHEATHING IS USED, H-CLIPS ARE NOT REQUIRED)	SOFFIT
	ALUMINUM PERFORATED SOFFIT INSTALLED PER MANUFACTURER INSTRUCTIONS TO MEET WIND PRESSURES PER R704.

NOTE: EXTERIOR CEILINGS SPECIFIED ABOVE MEET THE DESIGN WIND PRESSURES PER R703.1.2

2

WINDOW/DOOR/SOFFIT DESIGN WIND PRESSURES

WIND PRESSURES PER ASCE7-16, 160 MPH, EXPOSURE C, AND CONVERTED TO ALLOWABLE STRESS DESIGN PRESSURES USING 0.6W LOAD FACTOR. (Vasd=124 MPH, RISK CAT II, ENCLOSED, kd=0.85, h=15', λ=1.21)

TYPE	INTERIOR ZONE 4	END ZONE 5
SOFFIT	+33.5 -36.3	+33.5 -44.8
TYPICAL WINDOWS & DOORS	+33.5 -36.3	+33.5 -44.8
8' OR 9' GARAGE DOORS	+29.4 -33.3	
16' OR 18' GARAGE DOORS	+28.2 -31.5	

(SEE PLAN FOR OTHER SPECIFIC PRESSURES)

1) TABLE MAY BE USED FOR ANY SIZE WINDOW OR DOOR IN EACH TYPE.
2) USE "INTERIOR ZONE 4" PRESSURES UNLESS WINDOW OR DOOR IS LOCATED WITHIN THE "END ZONE 5" (SEE DIAGRAM BELOW), THEN USE THE HIGHER PRESSURES UNDER THE "END ZONE 5" COLUMN.
3) ALL GLASS / GLAZING SHALL BE IMPACT RATED OR USE IMPACT RATED SHUTTERS.
4) SUBMIT PRODUCT APPROVALS TO THE BUILDING DEPARTMENT AS REQUIRED BY THE LOCAL JURISDICTION.
5) MANUFACTURED SOFFIT PRODUCTS SHALL BE INSTALLED PER MFR ENGINEERING SPEC SHEETS.

* ON IRREGULAR SHAPED BUILDINGS, THERE IS NO GUIDANCE IN THE CODE FOR HOW FAR A CORNER MUST PROTRUDE FROM THE MAIN BUILDING TO BE CONSIDERED 'ZONE 5'. WE HAVE CHOSEN >15'. THIS IS SUBJECT TO JUDGEMENT CALL BY THE AUTHORITY HAVING JURISDICTION.

IN ZONE 5, MANUFACTURED SOFFIT PRODUCTS MAY REQUIRE ADDITIONAL BATTONS OR FASTENING PER MFR ENGINEERING SPEC SHEETS TO MEET THE PRESSURE REQUIREMENTS.

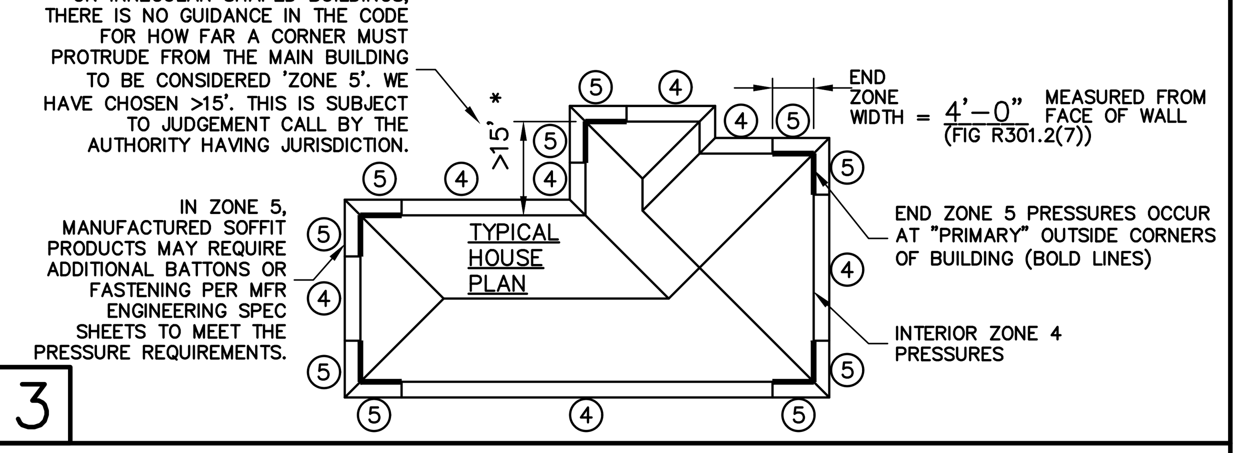

3

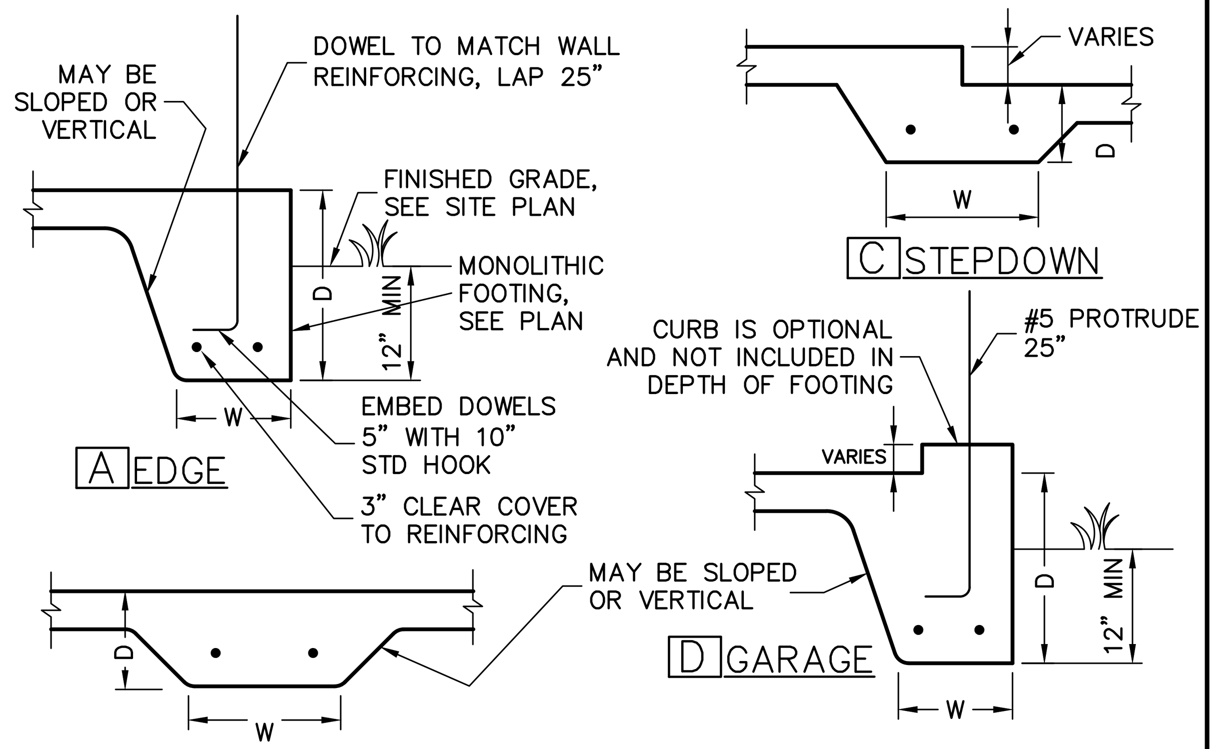

4 MONOLITHIC FOOTINGS
SCALE: 3/4" = 1'-0"

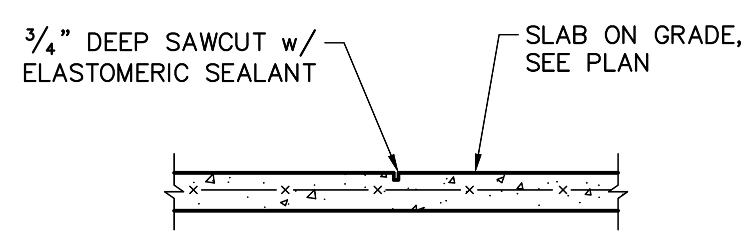

NOTES:
1) PROVIDE SAWCUTS TO CREATE APPROXIMATE 20' X 20' MAXIMUM SQUARES.
2) SAWCUT CONCRETE SLAB WITHIN 4 TO 12 HOURS OF CONCRETE PLACEMENT.

5 SLAB SAWCUT DETAIL
SCALE: NTS

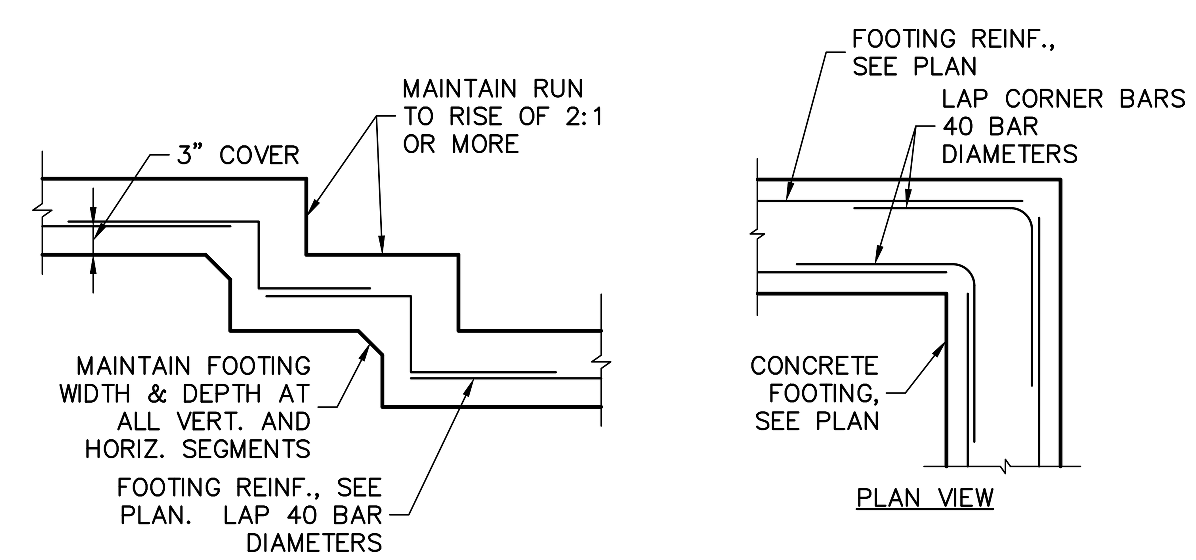

6 STEP FOOTING
SCALE: NTS

FOOTING CORNER BARS
SCALE: NTS

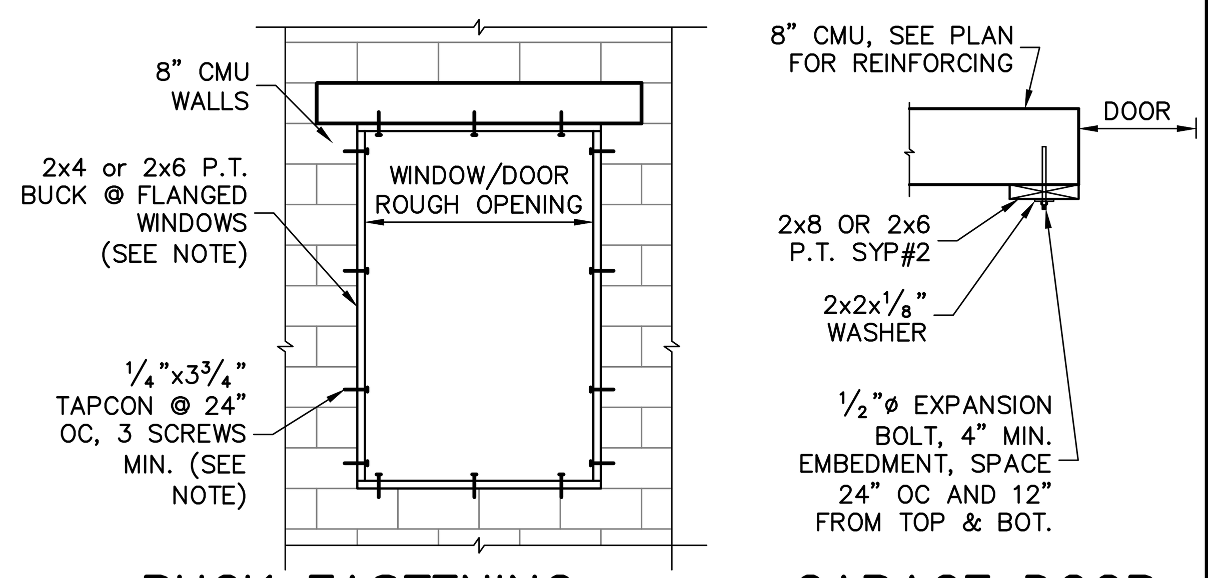

BUCK FASTENING

GARAGE DOOR

NOTE: THIS BUCK FASTENING DETAIL IS INTENDED FOR FLANGED WINDOW/DOOR PRODUCTS THAT FASTEN THRU THE FLANGE WITH WOOD SCREWS TO THE BUCK. FOR WINDOW/DOOR PRODUCTS THAT DO NOT HAVE A FLANGE AND FASTEN INSTEAD OUTWARD THRU THE FRAME, USE MASONRY SCREWS PER MFR. THAT ARE LONG ENOUGH TO PENETRATE 2-1/4" INTO THE MASONRY. IN THIS CASE, THE BUCK MATERIAL IS SIMPLY A SPACER AND MAY BE 1x4 OR 1x6 OR OMITTED ENTIRELY AND THE SPACER MAY BE TACKED IN PLACE WITH MASONRY NAILS OR PINS.

7

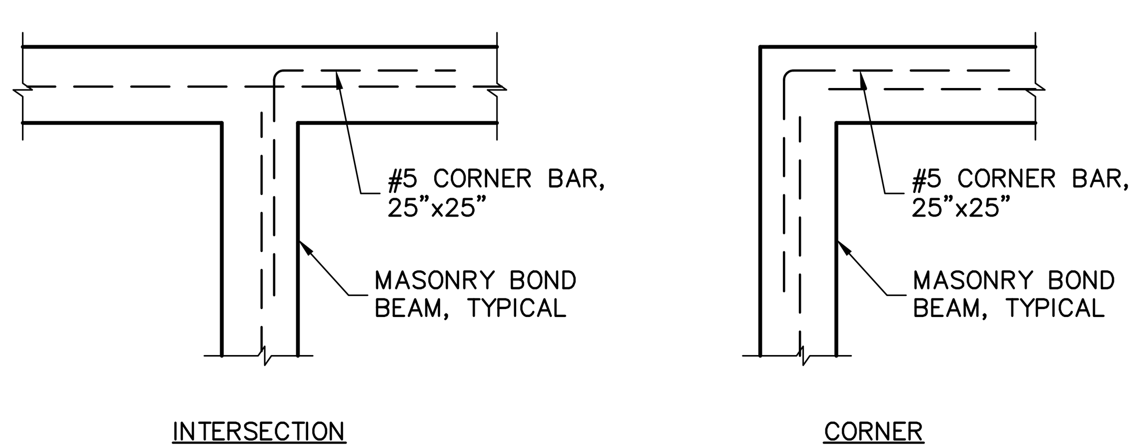

8 CORNER BAR DETAIL IN BOND BEAMS
SCALE: 3/4" = 1'-0"

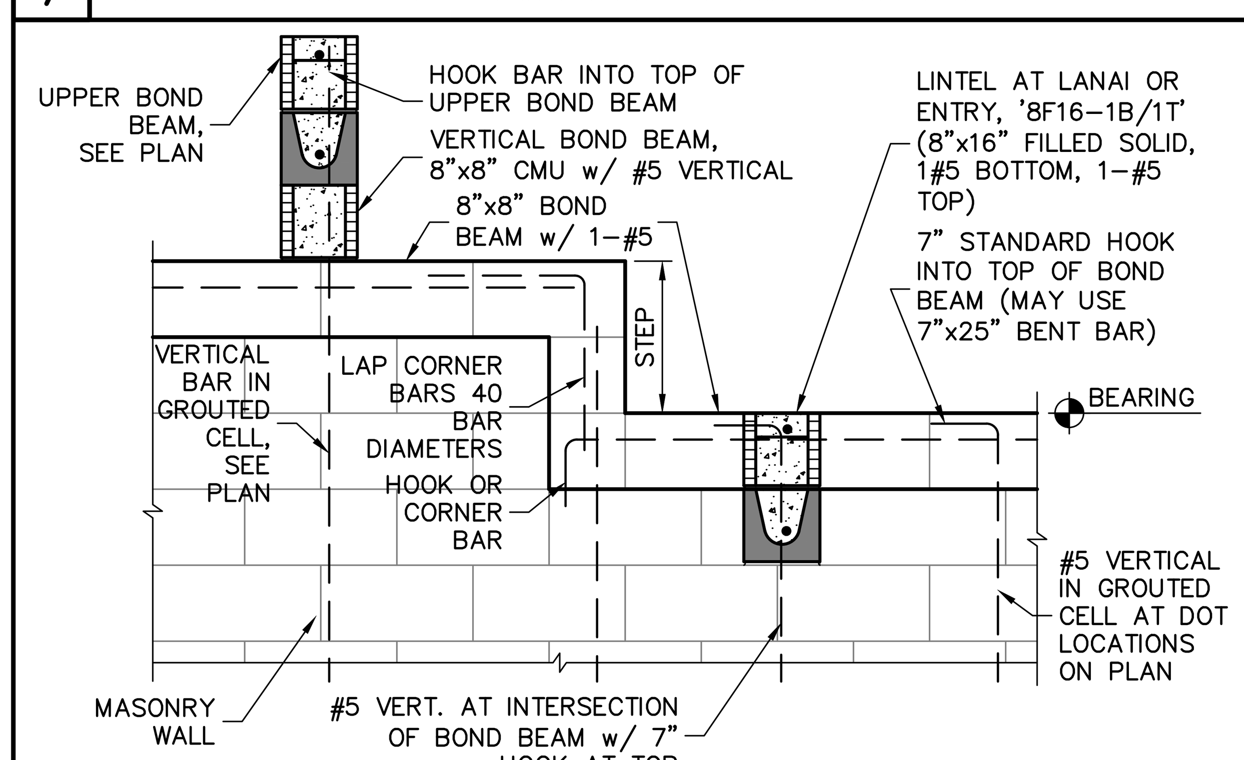

9 STEPPED BOND BEAM & REINFORCING
SCALE: 3/4" = 1'-0"

RETROFIT STRAPS TO CONCRETE/MASONRY

TRUSS UPLIFT (LBS) @ 24" OC	CONNECTOR	
TO 840	1-MTSM16 or 20	7-10dx1½", 4-¼x2¼ TITEN
TO 1045	1-HTSM16 or 20	8-10dx1½", 4-¼x2¼ TITEN
TO 2090	2-HTSM16 or 20	8-10dx1½", 4-¼x2¼ TITEN
TO 4300	2-LGT2	16-16d, 7-¼"x2¼" TITEN
TO 3480	HTT16	18-16d, ⅝"ø ALLTHREAD, DRILL & EPOXY 10" EMBED w/ SIMPSON SET.
TO 10530	HGT-2/3	TWO ¾"ø ALTHREAD, DRILL & EPOXY 12" EMBED WITH SIMPSON SET.

NOTES:
1) WHERE EMBEDDED STRAP IS MISSING OR MIS-LOCATED, PROVIDE A STRAP FROM THE ABOVE LIST AT EACH ROOF TRUSS BEARING POINT, BASED ON THE TRUSS UPLIFT VALUES IN THE SIGNED AND SEALED TRUSS DESIGN PACKAGE.
2) CONNECTORS ARE SIMPSON STRONG TIE. ALL CONNECTORS SHALL BE INSTALLED IN STRICT ACCORDANCE WITH SIMPSON PRINTED INSTRUCTIONS.

10 RETROFIT UPLIFT CONNECTOR SCHEDULE

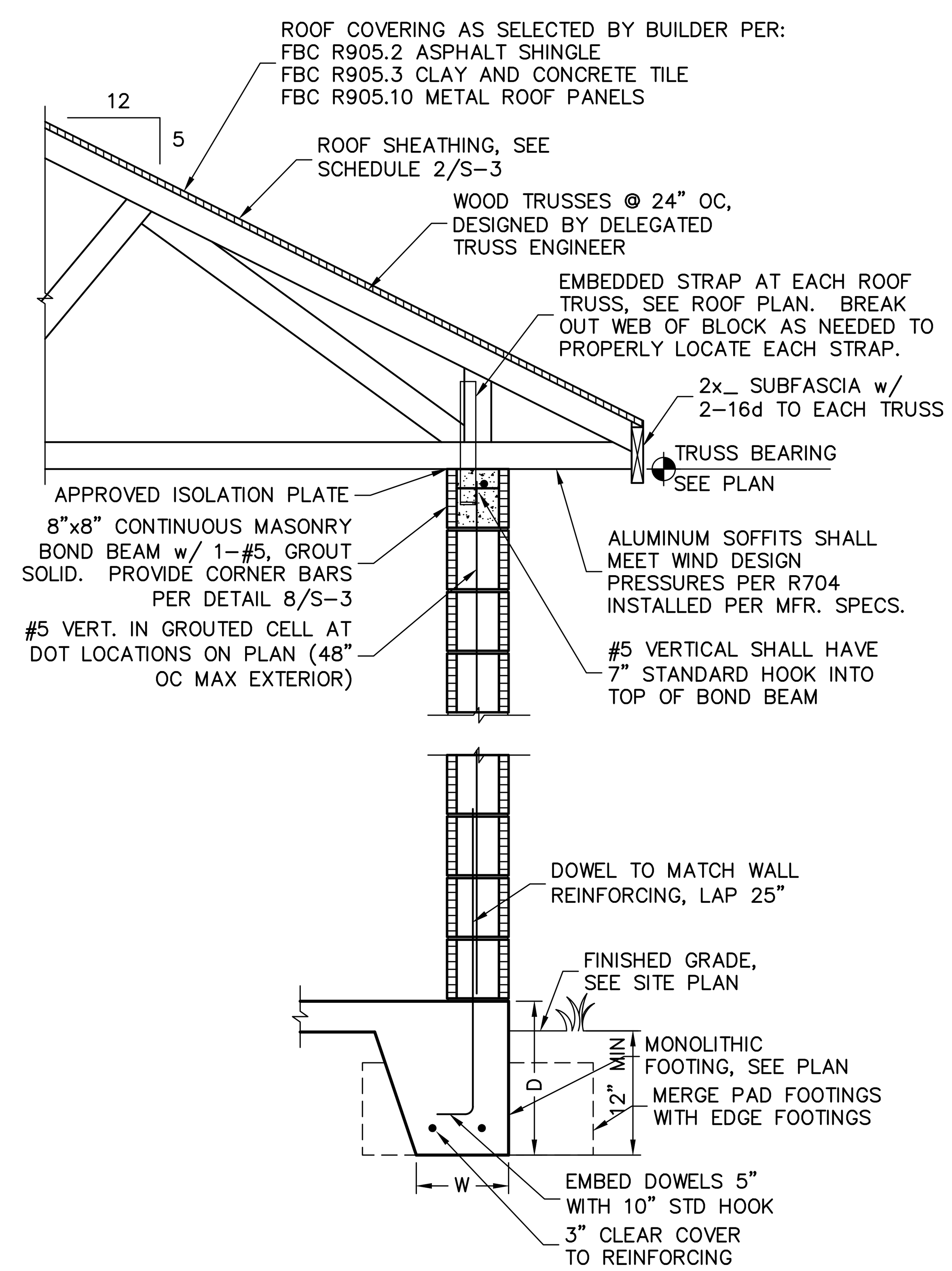

11 FULL HEIGHT WALL SECTION
SCALE: 3/4" = 1'-0"

DESIGN CRITERIA:

STRUCTURAL ENGINEERING PER:
FLORIDA BUILDING CODE 7th EDITION (2020) RESIDENTIAL
Occupancy: FBC 310.5 Residential Group R-3
Construction Type: V-B (fire resistance rating 0 hours, not sprinkled)

Codes to be used by other design professionals and licensed contractors:
2020 Florida Building Code, 7th Edition: Residential; Accessibility; Energy Conservation; Plumbing; Mechanical; and Fuel Gas.
Electrical is contained by reference within FBC Residential Chapter 34: NFPA 70-17 National Electrical Code.

1. FLOOR & ROOF UNIFORM LOADS:
   ELEVATED FLOORS: LIVE LOAD 40 PSF, DEAD LOAD 20 PSF
   ROOF: LIVE TOP CHORD 20 PSF
   LIVE BOTTOM CHORD 10 PSF (NON-CONCURRENT w/ TCLL)
   CEMENT ROOF TILE DEAD LOAD 25 PSF TOTAL
   SHINGLE/METAL ROOFING DEAD LOAD 15 PSF TOTAL
   MINIMUM DEAD LOAD FOR WIND: TC 5 PSF, BC 5 PSF
   DEFLECTION CRITERIA:
   FLOOR L/480 LIVE, L/360 TOTAL
   ROOF L/240 LIVE, L/180 TOTAL

2. WIND DESIGN PER ASCE7-16

BASIC WIND SPEED (ASCE7-16)	160 MPH
NOMINAL WIND SPEED (Vasd TABLE R301.2.1.3)	124 MPH
BUILDING CATEGORY	II
IMPORTANCE FACTOR	1.00
EXPOSURE	C
MEAN ROOF HEIGHT	= 15 FT
HEIGHT & EXPOSURE COEFFICIENT λ TABLE R301.2(3)	= 1.21
ROOF PITCH	5/12
ENCLOSURE CLASS.	ENCLOSED
INTERNAL PRES. COEFF.	+/- 0.18

   WINDOW/DOOR DESIGN WIND PRESSURE PER TABLE R301.2(2), R301.2(3) AND R301.2(4), SEE DETAIL 3/S-3.
   SOFFITS – PER R704, ALL SOFFITS & THEIR ATTACHMENTS SHALL BE CAPABLE OF RESISTING THE DESIGN PRESSURES SPECIFIED IN TABLE R301.2(2) FOR WALLS USING 10 SQ. FT

3. REINFORCED CONCRETE: DESIGN PER ACI 318-14
   REQUIRED COMPRESSIVE STRENGTH AT 28 DAYS:
   SLAB ON GRADE f'c = 2500 PSI
   3½" MINIMUM THICKNESS REINFORCED WITH 6x6 w1.4xw1.4 WWF OR FIBERMESH.
   CONVENTIONAL SHALLOW FOOTINGS f'c = 2500 PSI
   BEAMS AND COLUMNS f'c = 3000 PSI
   ALL OTHER CONCRETE (U.N.O.) f'c = 3000 PSI
   UNLESS OTHERWISE SHOWN ON DRAWINGS, MINIMUM CONCRETE COVER FOR REINFORCING SHALL BE AS FOLLOWS:
   FOOTINGS 3"
   SLAB ON GRADE CENTERED
   BEAMS 1½"
   COLUMNS 1½"
   ALL REINFORCING STEEL SHALL BE PLACED IN ACCORDANCE WITH THE TYPICAL BENDING DIAGRAMS AND PLACING DETAILS OF ACI STANDARDS AND SPECIFICATIONS. ALL REINFORCING STEEL SHALL BE HELD SECURELY IN POSITION WITH STANDARD ACCESSORIES DURING PLACING OF CONCRETE.
   REINFORCING STEEL – ASTM A615 GRADE 40 FOR #3
   GRADE 60 FOR #4 TO #11

   WELDED WIRE FABRIC – ASTM A185

   SPLICES IN REINFORCING, SHALL BE 40 BAR DIAMETERS. NON-CONTACT LAP SPLICES MAY BE USED PROVIDED REINFORCING IS NOT SPACED MORE THAN 5" APART FOR #5 BARS.

   FORMWORK AND SHORING SHALL REMAIN IN PLACE UNTIL CONCRETE HAS REACHED AT LEAST 2/3 OF THE REQUIRED 28 DAY STRENGTH.

4. REINFORCED MASONRY: DESIGN PER TMS 402/602-16
   REQUIRED COMPRESSIVE STRENGTHS:
   MASONRY WALLS f'm = 1500 PSI

   REINFORCING STEEL – ASTM A615 GRADE 60.
   SPLICES IN REINFORCING, SHALL BE 48 BAR DIAMETERS.
   ALL CONCRETE MASONRY UNITS SHALL BE COMPOSED OF ASTM C90, GRADE N-1 HOLLOW CONCRETE MASONRY UNITS WITH TYPE 'S' MORTAR. GROUT ALL CELLS CONTAINING VERTICAL REINFORCEMENT WITH 3000 PSI PEA ROCK CONCRETE GROUT. ALL CELLS BELOW FINISHED GRADE SHALL BE GROUTED SOLID. ALL EXTERIOR WALLS SHALL BE REINFORCED FULL HEIGHT AT DOT LOCATIONS ON PLAN.

5. DELEGATED-ENGINEERED WOOD ROOF & FLOOR TRUSSES:
   ALL WOOD ROOF AND FLOOR TRUSSES SHALL BE DESIGNED BY A DELEGATED TRUSS ENGINEER PER RULE 61G15-31.003 OF THE FLORIDA ADMINISTRATIVE CODE. ALL TRUSSES SHALL HAVE TEMPORARY BRACING PER "COMMENTARY AND RECOMMENDATIONS FOR HANDLING, INSTALLING AND BRACING METAL PLATE CONNECTED WOOD TRUSSES, HIB-91." FOR OTHER BRACING REQUIREMENTS, NOTIFY ENGINEER. PROVIDE PERMANENT BRACING PER TRUSS MFR. SHOP DRAWINGS. IF PERMANENT BRACING IS NOT SPECIFIED, CONTACT ENGINEER.

6. FOUNDATION: CONVENTIONAL SHALLOW CONCRETE FOOTINGS
   SOIL BEARING CAPACITY 2000 PSF
   THE CONTRACTOR SHALL BE RESPONSIBLE FOR DETERMINING THE SUITABILITY OF THE SOIL CONDITIONS FOR THE INTENDED STRUCTURE AND ASSUMED SOIL BEARING CAPACITY.
   IT IS RECOMMENDED THAT A GEOTECHNICAL FIRM BE HIRED TO PERFORM A SITE EVALUATION.

7. DIMENSIONS: VERIFY ALL DIMENSIONS WITH HOUSE PLANS.
   SEE HOUSE PLANS, MECHANICAL, ELECTRICAL AND PLUMBING DRAWINGS FOR EMBEDS, OPENINGS, SLEEVES, ETC. WHICH ARE NOT SHOWN ON STRUCTURAL DRAWINGS.

8. MEANS AND METHODS: THE STRUCTURAL ENGINEER SHALL NOT HAVE CONTROL OR BE RESPONSIBLE FOR CONSTRUCTION MEANS, METHODS, TECHNIQUES, PROCEDURES, OR SEQUENCES TEMPORARY BRACING, SHORING, GUYING OR OTHER MEANS TO SUPPORT STRUCTURAL ELEMENTS IN PLACE DURING CONSTRUCTION. FOR THE ACTS OR OMISSIONS OF THE CONTRACTOR, OR ANY OTHER PERSONS PERFORMING THE WORK OR FOR THE FAILURE OF ANY OF THEM TO CONSTRUCT THE WORK IN ACCORDANCE WITH THE CONTRACT DOCUMENTS.

9. SHOP DRAWINGS: SHOP DRAWINGS SHALL BE PREPARED AND SUBMITTED TO THE ENGINEER FOR REVIEW FOR ALL STRUCTURAL ELEMENTS UTILIZING PREFABRICATED COMPONENTS. ONE SET OF SIGNED & SEALED TRUSS ENGINEERING SHALL BE DELIVERED TO THE ENGINEER OF RECORD FOR THE STRUCTURE PER FLORIDA ADMINISTRATIVE CODE 61G15-30.005 AND 61G15-31.003.

FBC R703.7 EXTERIOR PLASTER
ASTM C926 AND ASTM C1063

THE CODE SECTIONS REFERENCED BELOW ARE FOR SUMMARY PURPOSES. SEE THE FLORIDA BUILDING CODE AND THE ASTM STANDARDS FOR FULL DESCRIPTIONS AND REQUIREMENTS.

R703.7.1 Lath: Where required by the wall framing type, install metal lath per ASTM C1063 or non metallic lath per ASTM C1787. Use self furring lath as required by the ASTM spec. Use paper backed lath as required per Water Resistive Barrier specs.

R703.7.2 Plaster: Install portland cement based plaster and number of coats per ASTM C926 and thickness per Table R702.1(1).

R703.7.3 Water Resistive Barriers: Install water resistive barriers per R703.2 and water resistive vapor-permeable barrier over stud walls. (Note: ZIP wall sheathing with seam tape qualifies as the first layer)

R703.7.2.1 Weep Screed: Weep screed shall be installed at the bottom edge of all exterior wood framing (including wall studs, gable end trusses and floor trusses) receiving lath and plaster.

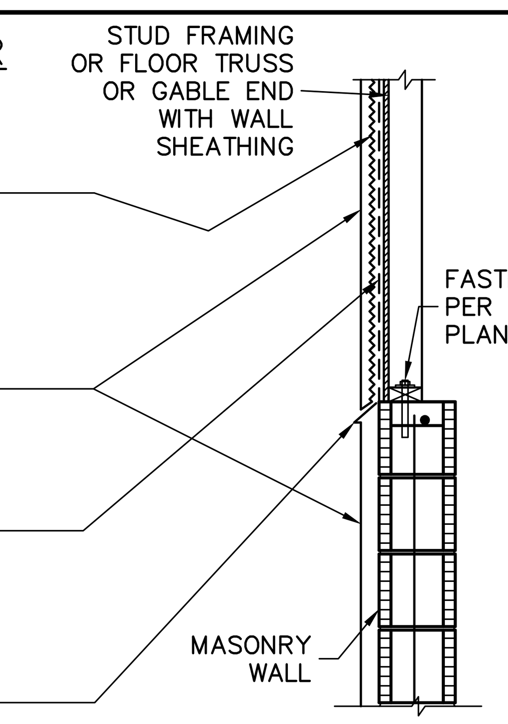

EXTERIOR WALL WITH PLASTER
THICKNESSES ARE EXAGGERATED FOR DRAWING PURPOSES

FOR BUILDERS FIRST SOURCE TRUSSES, 160 MPH, EXPOSURE C, MODEL 2540, ELEVATION L w/ EXT LANAI, JOB # MASTER, DATED: 01/29/18, REVISED: 01/12/21

DESIGNED IN ACCORDANCE WITH FLORIDA BUILDING CODE 7th EDITION (2020) RESIDENTIAL

REVISIONS	BY

STRUCTURAL ENGINEERING:
STRUCTURAL SYSTEMS OF NORTH FLORIDA
1634 S.E. 47th STREET, SUITE #3
CAPE CORAL, FL 33904
(239) 549-4554
CA# 8829

DEREK W. BERGENER LICENSE No. 58552 STATE OF FLORIDA PROFESSIONAL ENGINEER

BUILDER:
D.R.HORTON America's Builder

STRUCTURAL DETAILS
MODEL 2540 L
EXT LANAI
3390 CHERRY PALM DRIVE
N. FORT MYERS, FLORIDA 33917
LOT: 31 SUBDIVISION: MAGNOLIA

DESIGN/DRAWN DWB/GH
CHECKED DWB
DATE 11/3/21
SCALE VARIES
JOB NO. DR 13740
SHEET S-3

SHEET 3 OF 4

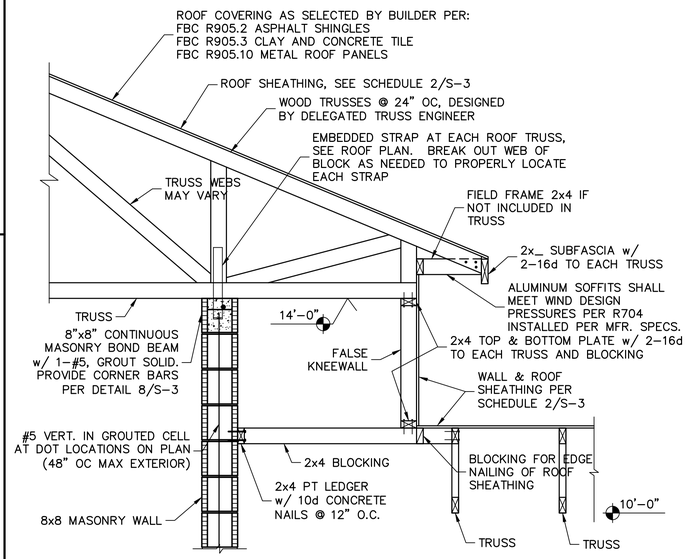

1 FALSE KNEEWALL AT ENTRY

SCALE: 3/4" = 1'-0"

ONLY USED FOR ELEVATIONS F & M

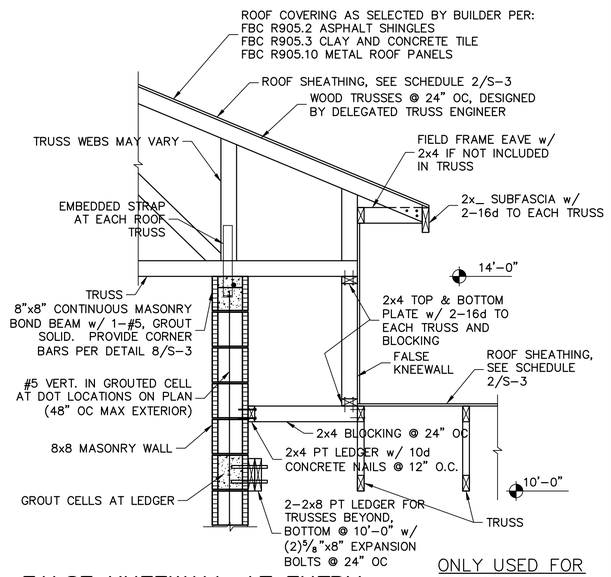

2 FALSE KNEEWALL AT ENTRY

SCALE: 3/4" = 1'-0"

ONLY USED FOR ELEVATION E & L

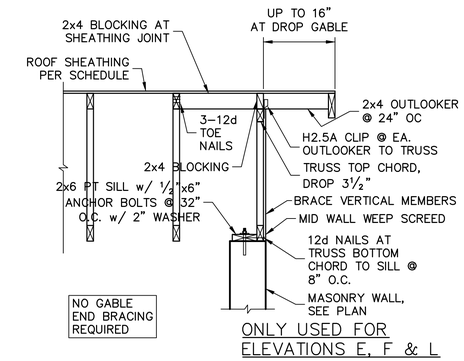

ONLY USED FOR ELEVATIONS E, F & L

3 OUTLOOKER DETAIL AT DROP GABLE

SCALE: N.T.S.

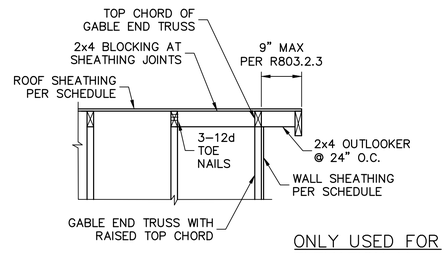

ONLY USED FOR ELEVATION M

4 OUTLOOKER DETAIL AT RAISED GABLE

SCALE: N.T.S.

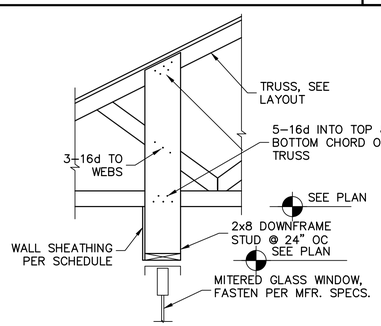

TRUSS PERPENDICULAR TO WINDOW

5A SUSPENDED HEADER AT MITERED GLASS

SCALE: 3/4" = 1'-0"

DETAILS 5A & 5B ARE ONLY USED FOR MITERED GLASS WINDOW OPTION AT EXTENDED LANAI

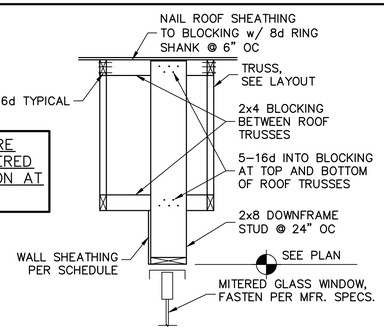

TRUSS PARALLEL TO WINDOW

5B SUSPENDED HEADER AT MITERED GLASS

SCALE: 3/4" = 1'-0"

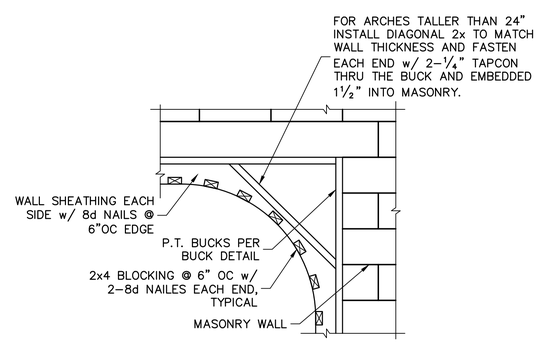

6 WOOD FRAMED ARCH

SCALE: 3/4" = 1'-0"

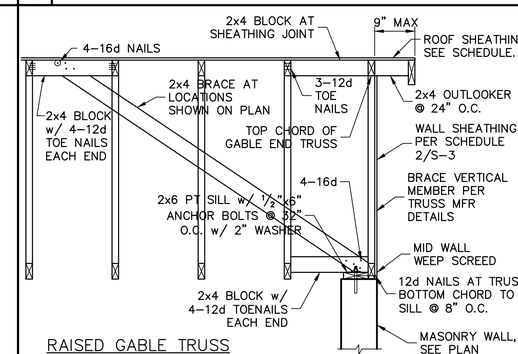

ONLY USED FOR ELEVATION F

7 GABLE END BRACING

SCALE: N.T.S.

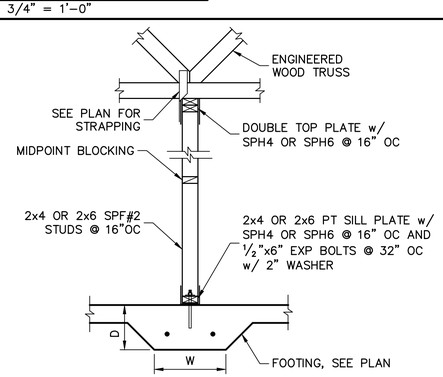

8 INTERIOR STUD BEARING WALL

SCALE: 3/4" = 1'-0"

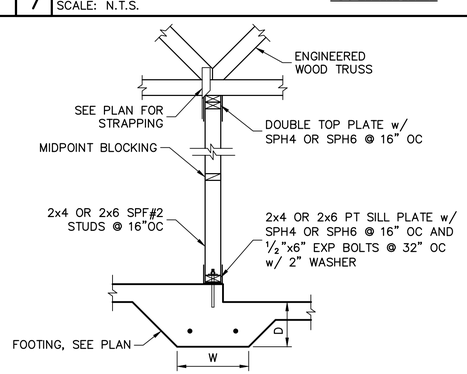

INTERIOR STUD BEARING WALL @ GARAGE

SCALE: 3/4" = 1'-0"

REVISIONS	BY

STRUCTURAL ENGINEERING:

STRUCTURAL SYSTEMS OF NORTH FLORIDA
1634 S.E. 47th STREET, SUITE #3
CAPE CORAL, FL 33904
(239) 549-4554
CA# 8829

DENIS W. BERGENER LICENSE No. 58552 STATE OF FLORIDA PROFESSIONAL ENGINEER

DESIGNED IN ACCORDANCE WITH FLORIDA BUILDING CODE 7th EDITION (2020) RESIDENTIAL

FOR BUILDERS FIRST SOURCE TRUSSES, 160 MPH, EXPOSURE C, MODEL 2540, ELEVATION L w/ EXT LANAI, JOB # MASTER, DATED: 01/29/18, REVISED: 01/12/21

BUILDER: D·R·HORTON America's Builder

STRUCTURAL DETAILS
MODEL 2540 L
EXT LANAI

3390 CHERRY PALM DRIVE
N. FORT MYERS, FLORIDA 33917
LOT: 31 SUBDIVISION: MAGNOLIA

DESIGN/DRAWN	DWB/GH
CHECKED	DWB
DATE	11/3/21
SCALE	VARIES
JOB NO.	DR 13740
SHEET	S-4

SHEET 4 OF 4