Watts	Input Voltage	Utility Feed Amps
75	120	0.78
	277	0.42
100	120	1.31
	277	0.57
125	120	1.64
	277	0.71
200	120	2.63
	277	1.14
300	120	3.94
	277	1.71
350	120	4.60
	277	1.99
375	120	4.93
	277	2.13

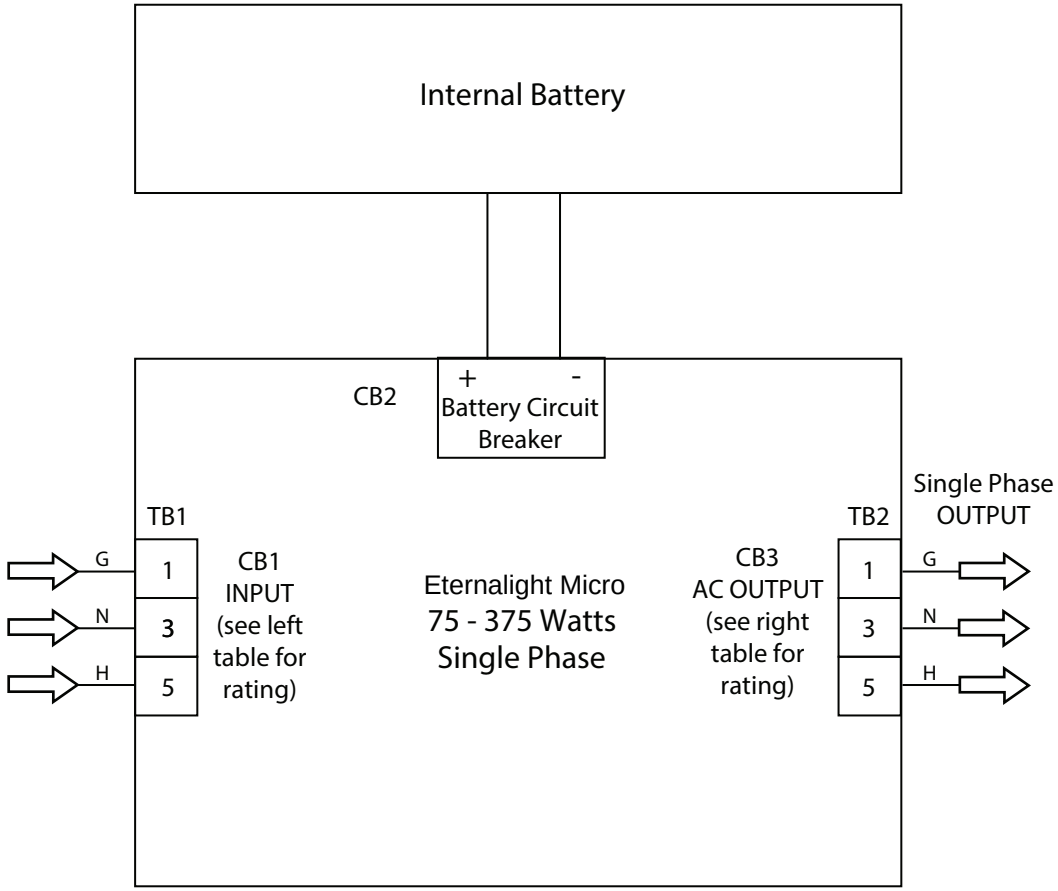

Watts	Output Voltage	Max Output Amps
75	120	0.78
	277	0.34
100	120	1.05
	277	0.45
125	120	1.31
	277	0.57
200	120	2.10
	277	0.91
300	120	3.15
	277	1.36
350	120	3.68
	277	1.59
375	120	3.94
	277	1.71

* Consult Factory for other wattages

REV	DESCRIPTION	ECO	DATE	WIRE LISTS
NR			3/29/10	See note Bottom Left Corner of Doc.

Thad Everson
(608)999-0039
teverson@facilitygatewy.com

Frank Horner
(608)692-9236
fhorner@facilitygateway.com

Title Cobra Micro: 75-400 Watts Single Phase Integration Drawing

Size: 11 x 8.5 | Doc No. 091-1010-01 | Revision: B

Date: 7/12/2018 | Time: 11:25 AM | Sheet 1 of 1

File: 091-1010-01

FGC EQUIPMENT