THIS DOCUMENT CONTAINS INFORMATION THAT IS CONFIDENTIAL AND/OR PROPRIETARY TO DONALDSON COMPANY,INC. ALL RIGHTS TO DISCLOSE, COPY, REPRODUCE, MANUFACTURE FROM OR DISPOSE OF THIS DOCUMENT OR ITS CONTENTS ARE RESERVED UNLESS SPECIFIED IN WRITING BY DONALDSON.

DWG NO.			
REV	ZONE	REVISION DESCRIPTION	APPROVAL/DATE

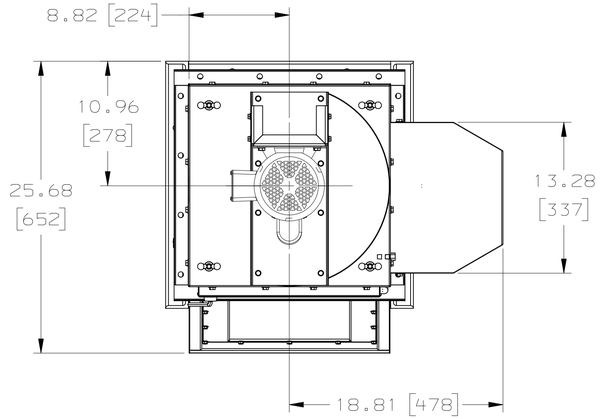

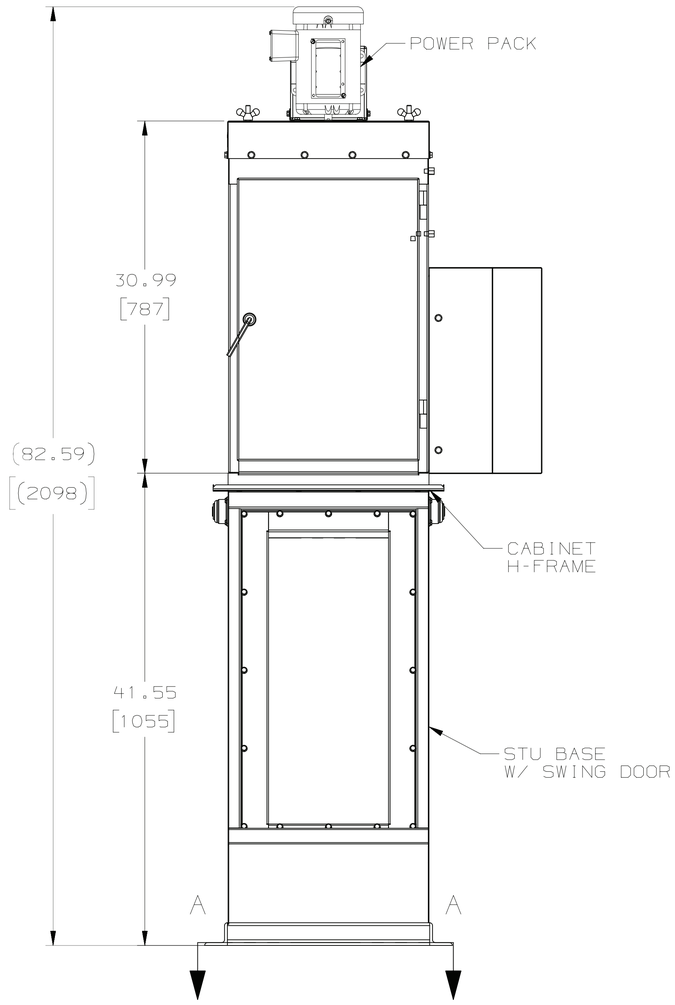

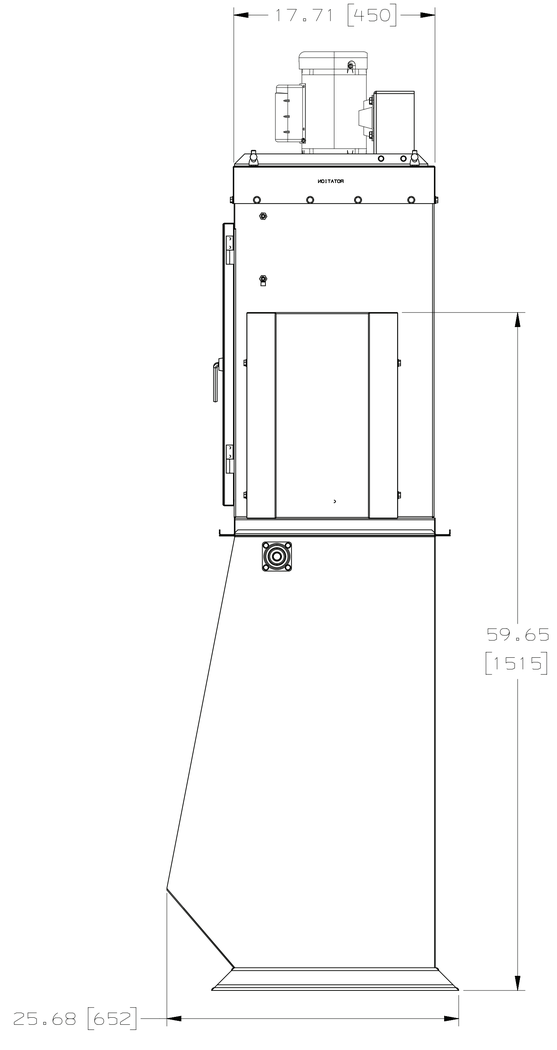

SPECIFICATIONS
FOR MODEL UMA 40

NO. OF FILTERS	1 WOVEN POLYESTER
ACTUAL FILTER AREA	40 SQ.FT.
COMPRESSED AIR REQUIRED	NONE
HOUSING RATING	-20" WG
STANDARD COLOR	BLUE
APPROX. SHIPPING WEIGHT	215 LBS
POWER SUPPLY	3/4 HP, 460/60/3
CONTROL	220/60/1

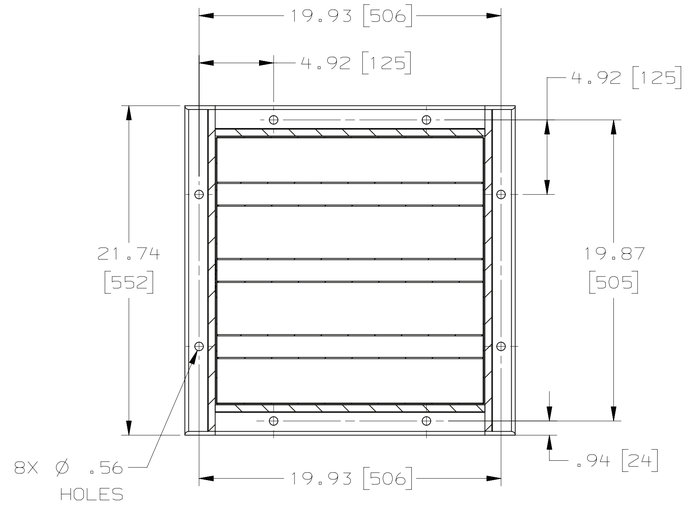

SECTION A-A

NOTES:

1. PLEASE REFER TO DONALDSON APPLICATION ENGINEERING FOR INFORMATION ON SEISMIC AND WIND LOAD RATINGS.
2. DIMENSIONS ARE IN INCHES AND (MILLIMETERS).
3. UMA CONTROLLER 460/60/3 AND MAGNEHELIC PACK.

INFORMATION ONLY

MATERIAL - - -	RELEASE NO.	TITLE VENTED UMA 40 OPEN BOTTOM WITH STU	Donaldson.
	DATE		
	EXP DATE		
	DWN A VILLANUEVA	NUMBER IG1701 3668L001	
REFERENCE	DATE APR 20, 2023		
	CHK R. AVILA		
	DATE MAY 12, 2023	SCALE / SHEET 1 OF 1 / REVISION	Donaldson Co. Inc. Minneapolis, MN USA
PREVIOUS DRAWING NO.	APVD	C/C NX/CADD / 0	IAF
DO NOT SCALE — TOLERANCES UNLESS OTHERWISE SPECIFIED: 2 PL ±, 3 PL ±, ANGLES ±°	DATE — THIRD ANGLE PROJECTION	SECTIONAL SIZE / OUTLINE SIZE	
		DESIGN CONTROL G528 / DWG LOCATION G888	VERSION G
		COPYRIGHT © DONALDSON COMPANY, INC.	L D