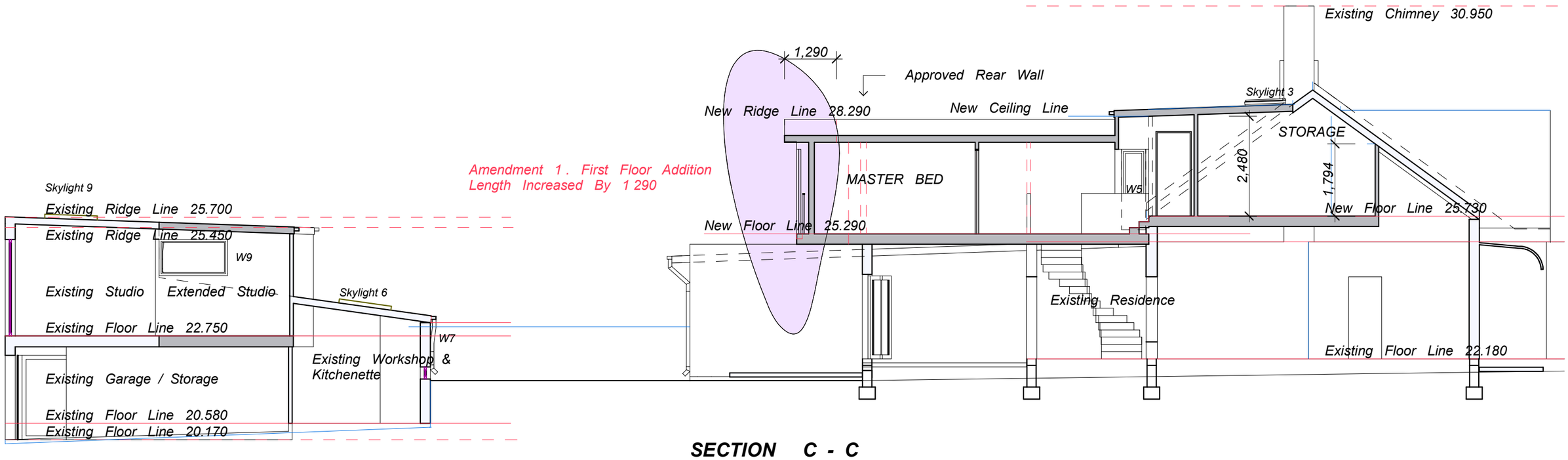
Existing Chimney 30.950
1,290
Approved Rear Wall
New Ridge Line 28.290
New Ceiling Line
Skylight 3
STORAGE
Amendment 1. First Floor Addition
Length Increased By 1 290
MASTER BED
2,480
1,794
W5
New Floor Line 25.730
Skylight 9
Existing Ridge Line 25.700
Existing Ridge Line 25.450
W9
New Floor Line 25.290
Existing Studio
Extended Studio
Skylight 6
Existing Residence
Existing Floor Line 22.750
W7
Existing Workshop &
Kitchenette
Existing Floor Line 22.180
Existing Garage / Storage
Existing Floor Line 20.580
Existing Floor Line 20.170

SECTION C - C