HYDRAULIC EXCAVATOR

YC135

Operator's manual

广西玉柴装备科技有限公司

GUANGXI YUCHAI EQUIPMENT TECHNOLOGY CO., LTD.

⚠ Warning

Incorrect operation of the machine can cause casualties. Before using the machine, the following should be done:

- Keep in mind the safety regulations and correct usage specification.
- Read and understand the relevant contents of the manual about the safe operation of the machine.
- Understand and get familiar with all the safety signs on the machine.
- Ask irrelevant people to leave the worksite.
- Before officially operating this machine at the worksite, you should have been trained on the safe operation of the machine in advance.

You are responsible for complying with relevant laws and regulations and complying with Yuchai Heavy Industry's instructions on machine operation and maintenance.

Contents

1. PREFACE
TO USERS 1-2
PRODUCT INFORMATION 1-3
MACHINE ARCHIVE 1-4
MACHINE DIRECTION 1-5
MACHINE COMPONENTS 1-6
MACHINE OVERVIEW 1-7
SAFETY INFORMATION 1-8
TECHNICAL SPECIFICATIONS 1-9

2. SAFETY REGULATIONS
SAFETY GENERAL PRINCIPLES 2-2
SAFETY TIPS 2-3
SAFETY EQUIPMENT 2-4
SAFETY SIGNS 2-5
SAFETY IN THE WORKPLACE 2-13
SAFE OPERATION 2-14
TRANSPORTATION AND HANDLING 2-255
DOWNTIME FOR MAINTENANCE 2-26
FIRE, EXPLOSION AND POISONING PREVENTION 2-27
BATTERY 2-28
HYDRAULIC SYSTEM 2-29

3. PARTS INTRODUCTION
OVERVIEW OF CONTROLS 3-2
DRIVER'S SEAT 3-3
SEAT BELT 3-4
SECURITY LOCK PART 3-5
START SWITCH 3-6
THROTTLE CONTROL 3-7
MONITOR 3-8
MAIN SCREEN AND BASIC OPERATION 3-9
OPERATING MODE DESCRIPTION 3-13
OPERATION OF WORKING DEVICE AND ROTATION MECHANISM 3-14
WALKING MANIPULATION 3-15
KEY CONTROL PANEL 3-16
AIR CONDITIONING CONTROL 3-18
RADIO 3-21
DOOR AND WINDOW 3-23

4. OPERATION GUIDE

PREPARATION BEFORE OPERATING THE MACHINE 4-2
ENGINE OPERATION 4-3
IN AND OUT OF THE MACHINE 4-7
MOVEMENT OF THE MACHINE 4-8
STEERING OF THE MACHINE 4-10
ROTATION OF THE MACHINE 4-11
OPERATION OF WORKING DEVICE 4-12
WORK ON SLOPES OR WATER 4-14
GET OUT OF THE MUDDY ENVIRONMENT 4-15
CONSTRUCTION WORK GUIDE 4-16
REMOVAL AND INSTALLATION OF BUCKET 4-18
PARK THE MACHINE 4-19
AFTER OPERATION 4-20
LOADING, UNLOADING AND TRANSPORTATION OF MACHINES 4-21
WORKING IN COLD/HOT CLIMATES 4-25
STORAGE OF THE MACHINE 4-26
CAUSES OF TECHNICAL FAILURES AND SOLUTIONS 4-28

5. MAINTENANCE

COMMON SENSE FOR MAINTENANCE 5-2
MAINTENANCE SUMMARY 5-4
MANDATORY REPLACEABLE PARTS 5-6
OIL SELECTION TABLE 5-7
TIGHTENING TORQUE 5-8
REGULAR INSPECTION AND MAINTENANCE TABLE 5-11
ROUTINE INSPECTION 5-13
ENGINE FUEL SYSTEM 5-14
ENGINE COOLING SYSTEM 5-18
ENGINE LUBRICATION SYSTEM 5-21
ENGINE AIR INTAKE SYSTEM 5-23
OTHER MAINTENANCE FOR ENGINE 5-24
HYDRAULIC SYSTEM 5-25
BATTERY 5-31
REDUCER 5-33
TRACK 5-37
THRUST WHEELS, SUPPORTING WHEELS AND GUIDE WHEELS 5-38
LUBRICATION 5-39
AIR CONDITIONING 5-41
BUCKET TEETH REPLACEMENT 5-44
WASHING OF FLOOR MATS 5-45
MAINTENANCE OF ELECTRICAL SYSTEM 5-46

6. ACCESSORIES GUIDE

SAFETY PRECAUTIONS 6-2
ASSEMBLY/DISASSEMBLY STEPS OF ACCESSORIES 6-3
ACCESSORIES OPERATION GUIDE 6-4
DAILY INSPECTION OF HYDRAULIC BREAKER HAMMER 6-9

1

Preface

To users

Dear respected users:

Hello!

Welcome to use Yuchai Heavy Industry's excavators, and thank you for your great support for Yuchai's business. This manual is about the safety instructions and the correct use and maintenance of the machine. Before starting and operating the machine for the first time and before repairing the machine, please read this manual carefully and fully understand the safety regulations, operation guidelines and maintenance matters until you fully understand them. For convenience of reference, please keep this manual in a designated place so that the qualified machine operators can read it regularly. If this manual is lost, damaged or illegible, please order it immediately from us or our agents. Please hand over this manual together when transferring this machine, so that the next owner can use it correctly.

Please entrust the agent or maintenance station of Yuchai Heavy Industry to overhaul and adjust the machine, and use the original accessories and spare parts provided by our company. If you use the non-original accessories or components, there may be no obvious impact on the machine for the time being, but it is likely to cause a series of undesirable results to the machine in the future. If the machine failure is caused by the use of non-original accessories and components or maintenance by an unauthorized unit, Yuchai Heavy Industry will not undertake the three guarantees business (repair, replacement and return) even within the guarantee period.

With adherence to the principle of "customer first", Yuchai Heavy Industry continuously improves its products to provide the best products to users as far as possible. Therefore, the improvement may be implemented at any time. As for the products being sold for the time being, we will not change the information and do not give advance notice.

We sincerely hope that this machine can serve you better and create greater value under your correct use and careful care.

GUANGXI YUCHAI EQUIPMENT TECHNOLOGY CO., LTD.

Product Information

When you need to know the basic information of the machine, you can check it according to the position shown in the figure.

- Machine information (the nameplate of the machine is on the front left side of the platform)

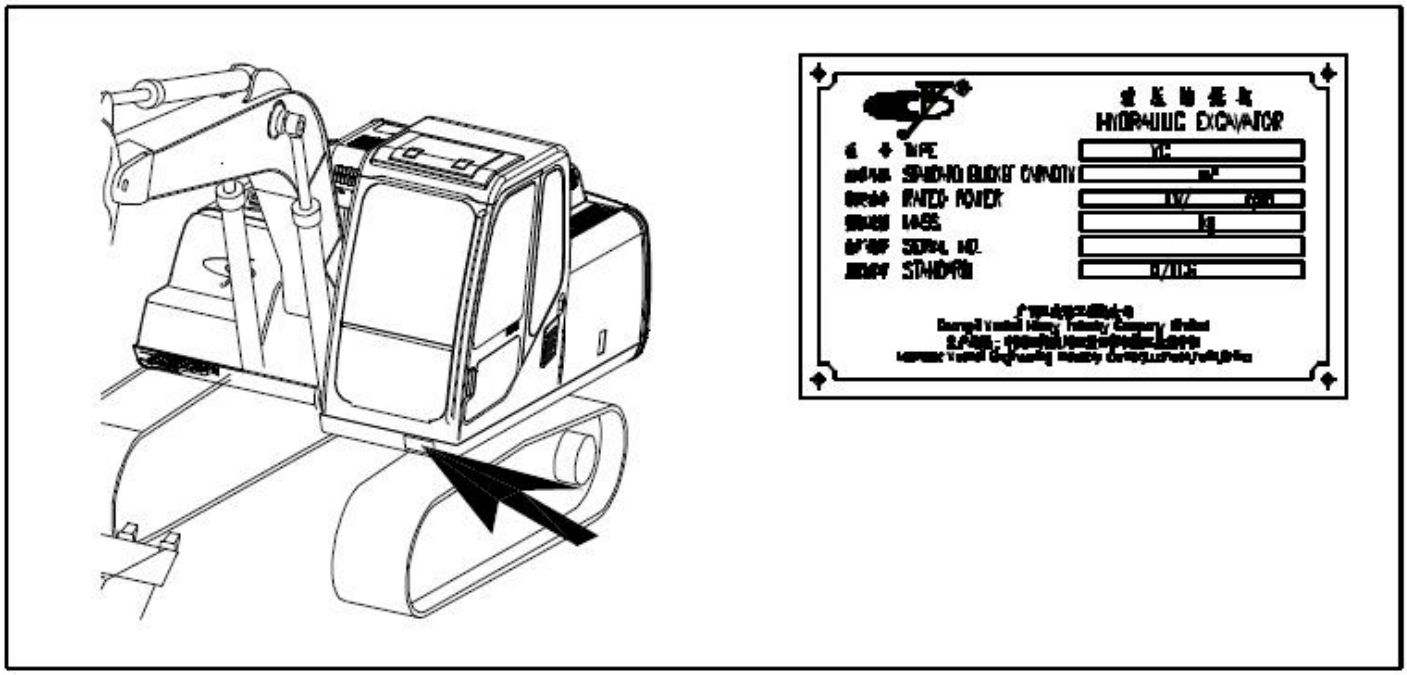

- Engine information

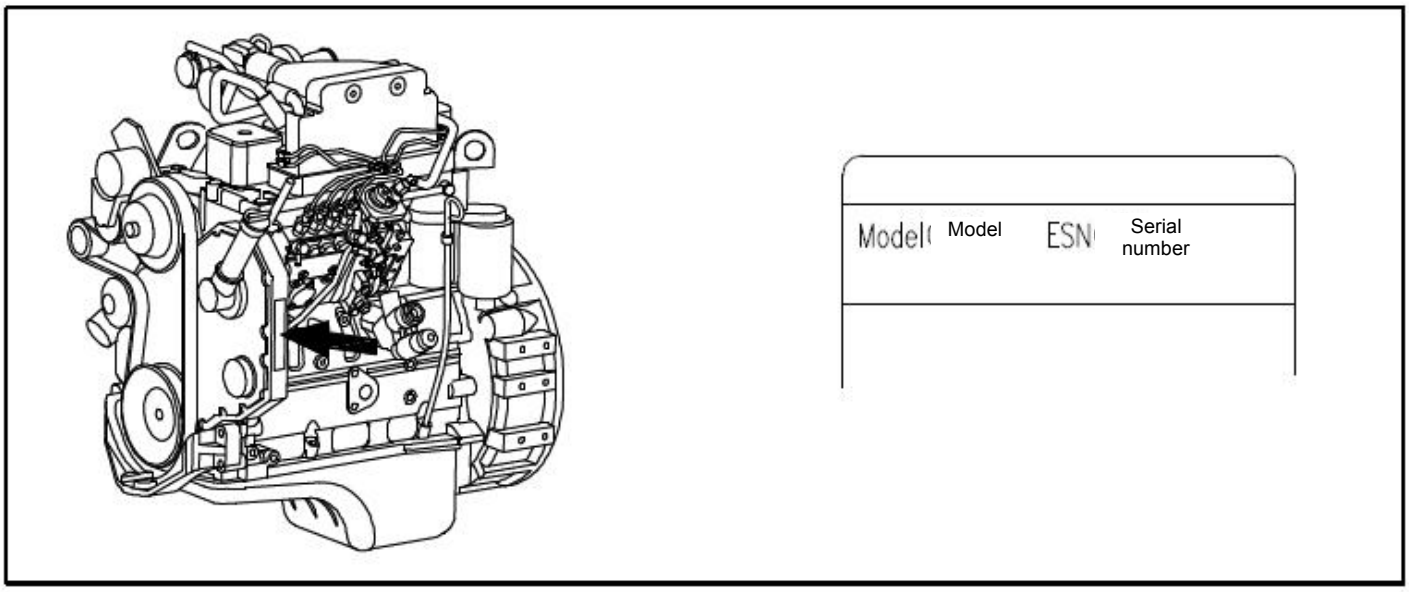

- Machine operation information (the engine timer is located on the digital instrument cluster in the cab of the machine)

Machine archive

Fill the machine number and engine serial number of your machine in the below table. When you need to purchase machine parts or want to obtain relevant information, you can inform Yuchai Heavy Industry of these codes.

Please record these numbers and keep them together with the product certificate. If your machine has been stolen accidentally, you can submit the information to the local public security agency.

- Machine model _____
- Machine number _____
- Engine serial number _____
- Distributor information _____

_____

_____

_____

Machine direction

The front, back, left, right, up and down in this manual refer to the directions shown in the figure.

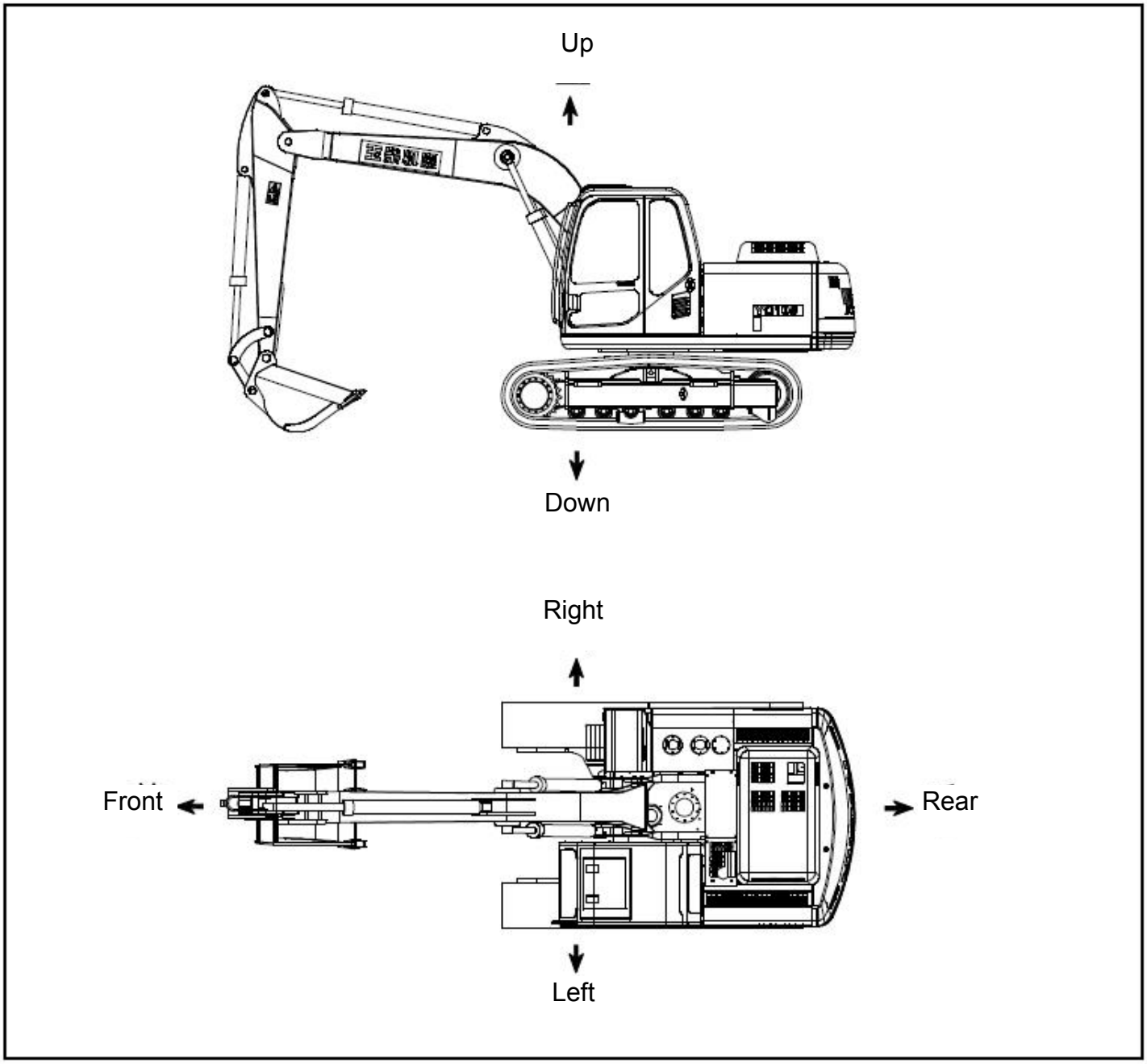

Machine components

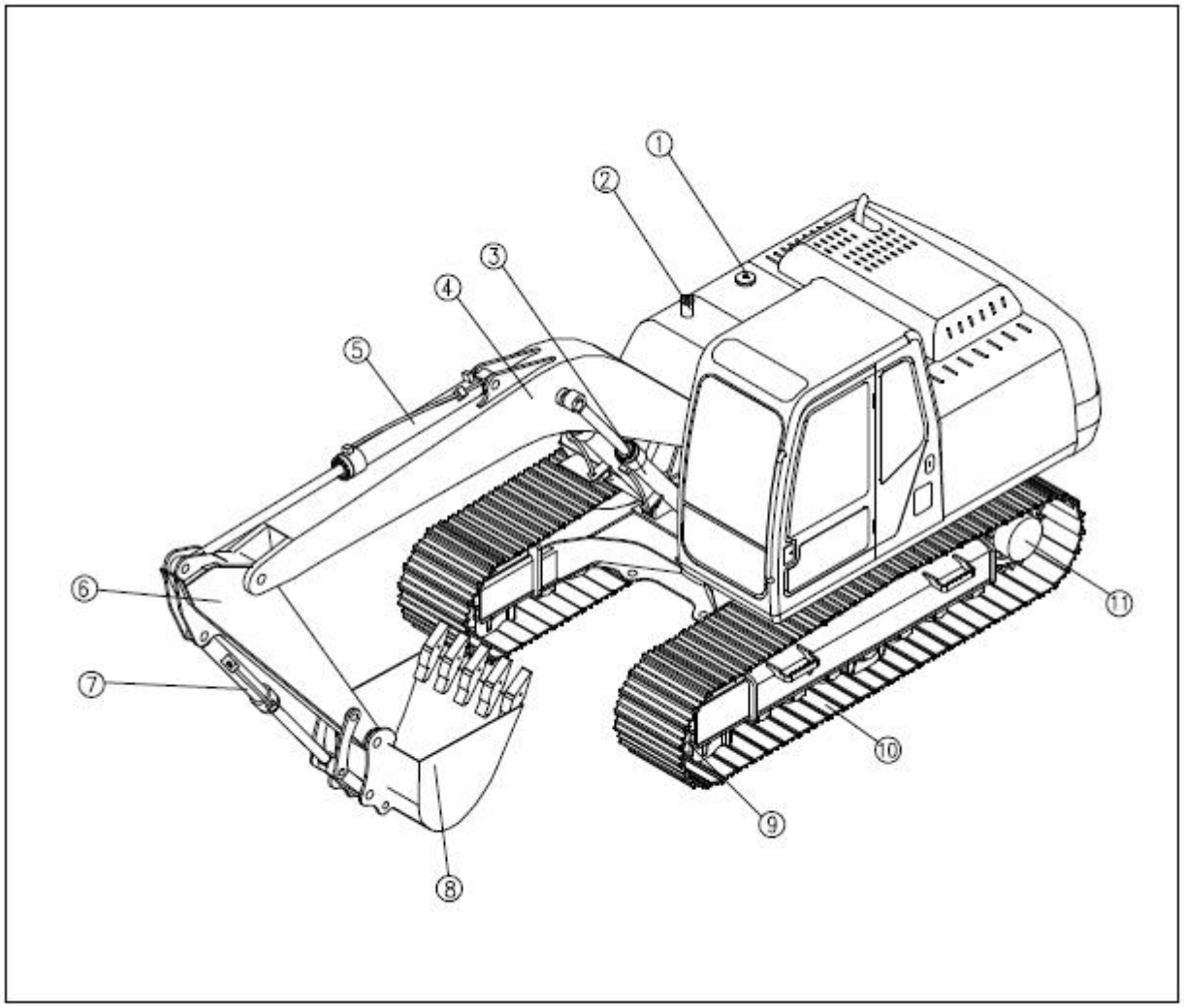

1. Hydraulic oil tank
2. Fuel tank
3. Boom cylinder
4. Boom
5. Stick cylinder
6. Stick
7. Bucket cylinder
8. Bucket
9. Guide wheel
10. Track
11. Drive wheel

Assigned operation

This machine is mainly used for the following operations:

● Excavation operation

● Trenching operation

● Loading operation

● Leveling operation

Please refer to the contents of operation guide and annex guide for detailed operation essentials.

Run-in

The machine has been fully adjusted and checked before delivery. It will accelerate the performance degradation and shorten the service life of the machine if the forced operation is carried out at the beginning. Therefore, please control the load at 80% of the full load for running-in during the first 100 hours (the display time of the instrument).

Safety related Information

Most accidents related to operation, inspection, maintenance and repair operations are caused by negligence of basic precautions and hazard prediction in safety.
The accidents can be prevented by predicting possible dangerous situations. Therefore, attention must be paid to the location and type of hazards. (In order to carry out such operations correctly, the operator must have the specified training, technology and tools.)
Please carefully read this manual and all safety precautions, warnings and accident prevention methods recorded on the machine, and understand their contents until you fully understand them. Otherwise, you must not operate, inspect and maintain the machine. The personal injury or death may occur if you ignore these warnings. Please pay attention to them.
For the safety tips listed in this manual and the safety signs used on this machine, the possible danger level can be distinguished through the following warning words. It also includes the preventive measures to avoid risks.

● ⚠Danger: It means that if it is not avoided, the consequences of the danger will result in death or serious injury. It is only applicable to the few occasions where the most danger exists.

● ⚠Warning: Indicates that if it is not avoided, the potentially dangerous consequences may result in death or serious injury.

● ⚠Caution: Indicates that if it is not avoided, the potentially dangerous consequences may result in low or moderate injuries, and can also be used to remind unsafe operations that may cause personal injury.

Our company cannot predict all hazards of operation, inspection, maintenance and repair in all environments. Therefore, the warnings in this manual and on the machine do not cover all situations. Users shall consider the necessary safety precautions by themselves if they perform the operation, inspection, maintenance and repair which are not covered in this manual. Users are responsible for taking the necessary safety measures by themselves.

Technical specifications

1. Structural dimension parameters					
Code	Item	Unit	**YC135-9**		
			870Q	**E135AC**	
	Working weight	Kg	13800	13800	
	Standard bucket capacity	m^3	0.52	0.52	
	Engine name		Cummins QSF3.8	Yuchai YC4DK	Yuchai YCD4D
	Engine power	KW/rpm	86/2200	86/2200	83/2100
A	Total length	mm	7784		
B	Total height	mm	2853		
C	Overall width	mm	2530		
D	Track width	mm	500		
E	Platform turning radius	mm	2315		
F	Track length	mm	3695		
G	Axle track	mm	2950		
H	Chassis pass height	mm	415		
I	Total height of boom end	mm	2853		
J	Platform outer width	mm	2520		
K	Engine hood height	mm	2155		
L	Platform ground clearance	mm	919		
	Backhoe bucket outer width	mm	1034		
	Walking speed	Km/h	5.0		
	Platform rotation speed	rpm	11		

Note: The above structural parameters are nominal values, and no prior notice will be given if they are changed by the manufacturer.

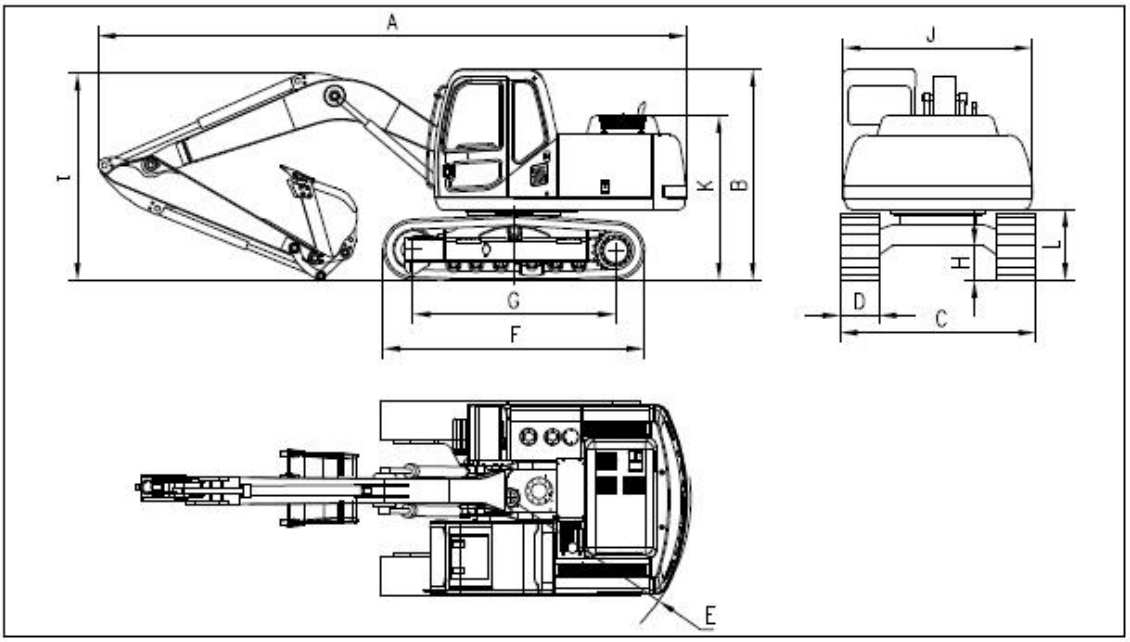

2. Working parameters

Code	Item	Unit	YC135-9	
			870Q	**E135AC**
A	Maximum digging height	mm	8335	
B	Maximum unloading height	mm	5896	
C	Maximum digging depth	mm	5257	
D	Maximum digging radius	mm	8070	
D1	Maximum ground level digging distance	mm	7933	
E	Digging radius of the maximum digging height	mm	4010	
F	Minimum turning radius	mm	2561	
	Maximum digging force of bucket	KN	106	
	Maximum digging force of stick	KN	75.8	

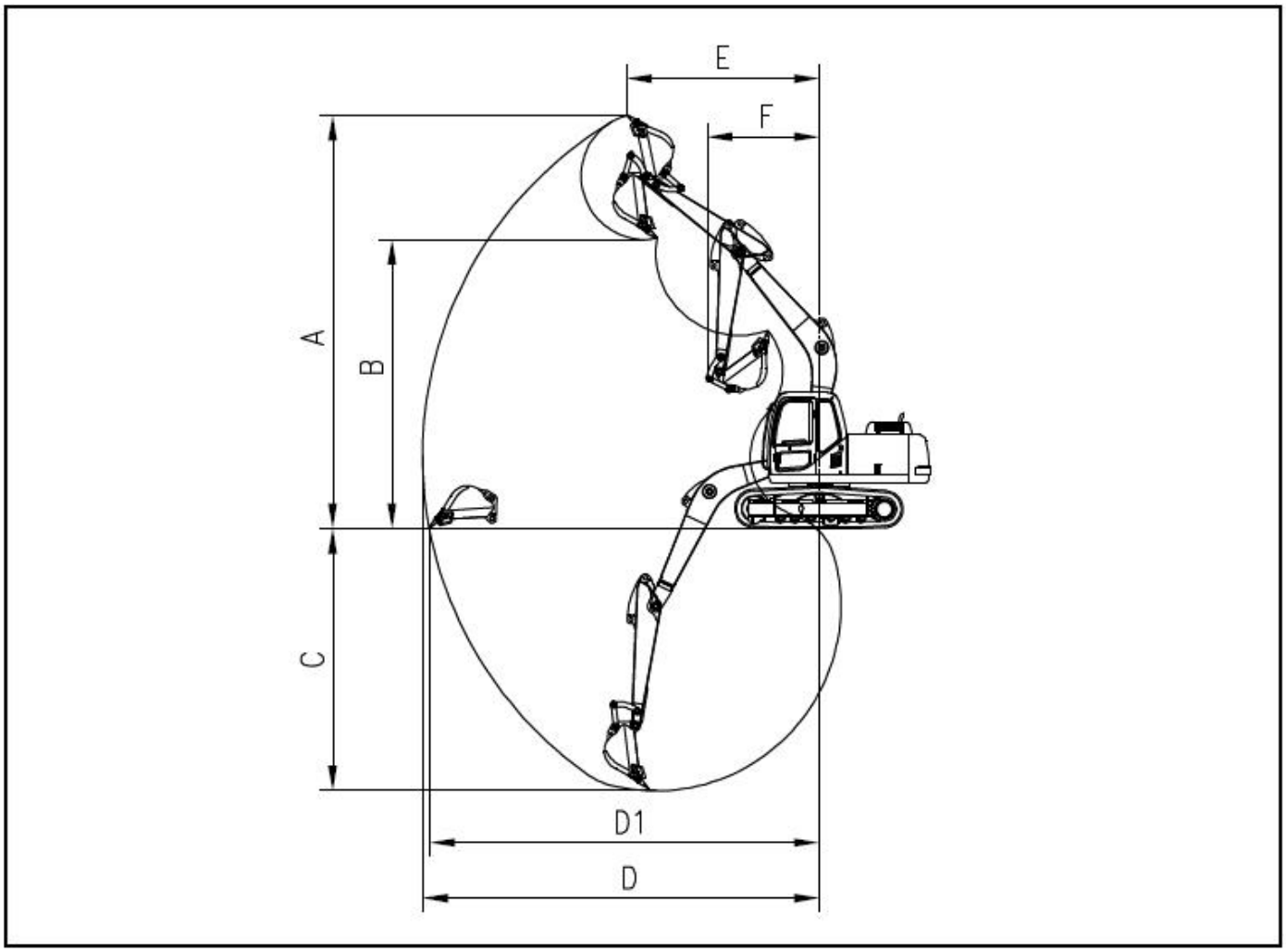

Note: No prior notice will be given if they are changed by the manufacturer.

3. Bucket

Bucket type	Backhoe bucket						Enhanced bucket	Clear ditch bucket	
Bucket capacity (m^3)	0.18	0.26	0.43	0.52	0.62	0.66	0.52	0.82	0.94
Bucket width (mm)	470	600	900	1034	1074	1034	982	1600	1800
Weight (kg)	324	352	434	492	535	537	540	504	537
Number of bucket teeth	2	3	4	5	5	5	5	0	0

4. Bucket applicable working environment

Bucket type			Backhoe bucket						Enhanced bucket
Bucket capacity (m^3)			0.18	0.26	0.43	0.52	0.62	0.66	0.52
Standard boom (4600 mm)	Standard stick (2250 mm)	Normal assembly	C	C	C	C	C	C	D
		Quick change device	X	X	X	X	X	X	X
	Extended stick (2745 mm)	Normal assembly	C	C	C	C	C	C	D
		Quick change device	X	X	X	X	X	X	X

Bucket type			Clear ditch bucket	
Bucket capacity (m^3)			0.82	0.94
Standard boom (4600 mm)	Standard stick (2250 mm)	Normal assembly	B	X
		Quick change device	X	B
	Extended stick (2745 mm)	Normal assembly	A	X
		Quick change device	A	A

Code	A	B	C	D	E	X
Weight range for work object	≤1200 kg/m	200 kg/m ~1600 kg/m	1600 kg/m ~1800 kg/m	1600 kg/m ~1800 kg/m	1900 kg/m ~2000 kg/m	Unavailable
Soil grade	Sand and silt soil, soil mud, planting soil	Light clay, small rock, mud, root planting soil	Mild clay, heavy sand, dry loess	Heavy sand, hard loess, clay with rocks	Dense hard loess, light marlstone, loose shale	

5. Hydraulic hammer

Type	Tower-type	Triangular type
Length (mm)	2251	1939
Impact rate (bpm)	350～700	350～700
Weight (kg)	890	765

	Accessory type		Tower-type	Triangular type
Standard boom (4600 mm)	Standard stick (2250 mm)	Normal assembly	★	★
		Quick change device	★	X
	Extended stick (2745 mm)	Normal assembly	★	★
		Quick change device	★	X

Note: ★ It is mainly applicable to the crushing of high-grade pavement (such as expressway), municipal pavement, demolition of low buildings, the crushing of aeolian fossils, and the secondary crushing of ores with low hardness and small volume.

X Unavailable.

6. Walking mechanism

Independently driven by a hydraulic motor through a multi-stage planetary gearbox.

	Walking speed (km/h)	Gradeability
High speed	**5.0**	70% (35°)
Low speed	**3.1**	

7. Hydraulic system

Negative flow control hydraulic system
Main valve: inlet multi-way valve
Maximum system flow:260L/min
Pressure (MPa): 34.3
Oil return filter: 10 μm filter element
Oil suction filter: metal filter element

8. Electrical system

Voltage: 24V
Battery: 120AH X 2

9. Service environment

Ambient temperature: -15～40 ℃
Ambient humidity: <85%
Altitude: ≤2500 m
Ambient temperature at transportation and storage: -15～40 ℃

10. Interference on machine body

The working devices of various series of hydraulic excavators may interfere with the boom oil cylinder or the boom lower cover plate when they are non-standard working devices. Therefore, the attention should be paid to the angle between the stick and the boom when retracting the stick if the machine uses non-standard working devices to prevent interference with the boom oil cylinder and damage to the machine body.

The following are all non-standard auxiliary working devices provided by our company:

Buckets	Bucket accessories directly mounted on the stick
	Bucket accessories for use with quick change couplings
	Bucket accessories for use with quick change devices
Breaker hammer	Breaker hammer directly mounted on the stick
	Breaker hammer for use with quick change devices
Drill tools	Drill device directly mounted on the stick
	Drill tool for use with quick change devices
Grab bucket	Grab bucket directly mounted on the stick

You should pay attention to the problems mentioned above if the model you purchased has any of the above configurations.

2

Safety regulations

Safety general principles

Following the relevant safety regulations in this manual can avoid most accidents that endanger the operation and maintenance of the machine. Before you operate or overhaul the machine, you should read and understand all the safety information in this manual and the safety diagrams of the machine.

The safety-related content in this manual points out the situations that may occur during the normal operation and maintenance of the machine, and gives possible solutions to these situations.

The content of the relevant safety aspects can be found in the chapters of this manual and that together with the content of this chapter constitutes a comprehensive guide on safety in this manual.

The safety information in this manual and on the machine will not include all potential hazards and all possible countermeasures. If you use the methods or actions that are not recommended or permitted in this manual or on the machine, you are responsible for taking necessary measures to ensure safety.

Under no circumstances shall it engage in the use or operation prohibited by the instruction.

This excavator should be operated and maintained by trained and qualified personnel.

Before starting, all functions of the machine shall be checked. If you find the machine is abnormal, stop it immediately to find out the cause, and work after troubleshooting.

The inspection and maintenance should be carried out in strict accordance with the provisions of this manual, and the operator should work and operate in accordance with the operating methods, safety regulations and the working range of the machine specified in this manual.

If you are under the influence of alcohol or drugs, please do not operate or maintain the machine, it will make you and the people around you very dangerous.

You must understand the content expressed by relevant signals and gestures.

When driving on the road, you must be familiar with the relevant laws and regulations of the country or region and strictly abide by it.

Please make sure there is no other person in the working area before operating the machine.

This machine is only used for normal excavation conditions on the ground, please do not use it under dangerous conditions such as underwater, culverts, explosive places and toxic environments.

Safety tips

1. Warning signs

In this manual, this warning sign points out important information about safety. When you see this sign, you should carefully read the information and advice behind the sign to avoid possible casualties.

2. Safety reminders

This instruction provides precautions, signs and descriptions of potential hazards for the safe use of the machine. Before operating, maintaining or repairing the machine, please read this manual and the safety signs affixed carefully, and work in accordance with the relevant procedures.

The safety reminders of this machine are indicated with words such as "Danger", "Warning" or "Caution". The following are their corresponding explanations:

- Danger: It means that if it is not avoided, the consequences of the danger will result in death or serious injury. It is only applicable to the few occasions where the most serious danger exists.

- Warning: Indicates that if it is not avoided, the potentially dangerous consequences may result in death or serious injury.

- Caution: Indicates that if it is not avoided, the potentially dangerous consequences may result in low or moderate injuries, and can also be used to remind unsafe operations that may cause personal injury.

1. Protective equipment for operators

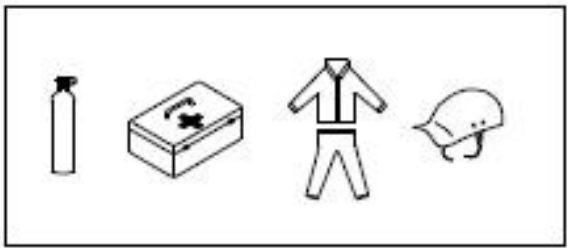

1) The operator must wear tight-fitting work clothes, safety helmets, working leather shoes and other related safety protection equipment (such as: goggles, masks, gloves, sound insulation products, seat belts, etc.) before operation or overhauling.
2) If the operator's hair is too long, please tie it up and cover it with a safety cap, which will protect your hair from being entangled by the machine.
3) The user must provide emergency medicines in the machine, conduct regular inspections, and add medicines when necessary, so that they can be used when they are urgently needed.
4) Before operation or overhauling, please be sure to check whether all protective equipment functions normally.
5) Please check the notification method of the emergency contact person in advance and know the telephone number, etc.

2. Cab safety, fire extinguisher and emergency hammer

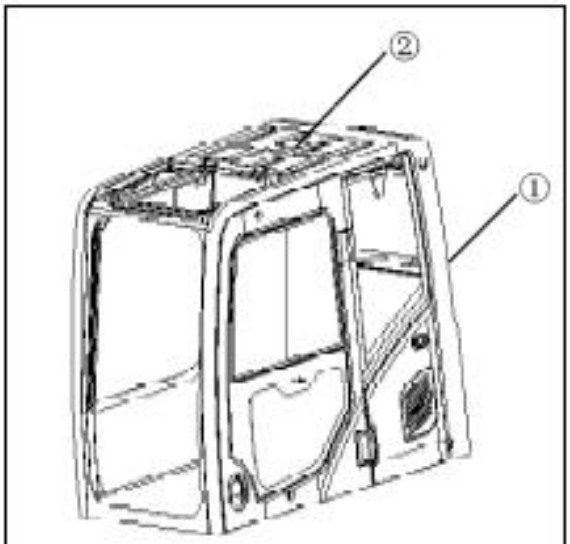

1. Fire extinguisher
2. Emergency hammer

The peripheral frame of the cab is a safety protection structure. In case of plastic deformation or fracture of any peripheral frame structure, the authorized service point shall be contacted for repair or replacement to ensure the safety protection capability.

Please provide the emergency hammers, fire extinguishers, etc. for use in case of an accident or fire. Please fully master the use method of emergency hammer and fire extinguisher.

Use a fire extinguisher to extinguish the fire when the machine is on fire.

Please carefully read the instructions on the fire extinguisher and use the fire extinguisher strictly according to the instructions.

Please check and maintain the fire extinguisher regularly.

Safety signs

Warning: Failure to understand the safety signs or loss of safety signs may result in injury or death. Please replace the missing or damaged signs in time, and keep the surfaces of all safety signs clean and easy to distinguish.

Before operating, maintaining and repairing the machine, you must carefully read the instruction manual and the warning signs affixed to the machine to ensure that you fully understand its contents and follow the relevant procedures.

Check the signs before starting the machine every day. If you can't see clearly, please clean it.

Please use cotton cloth, water and soap when cleaning the signs. Do not use organic solvents, gasoline, etc., as that will easily cause the signs to fall off.

If the signs are damaged, lost or illegible, please replace them. If the label is on the part that needs to be replaced, make sure that the new part is equipped with a sign.

Please contact our agent to obtain a new safety sign.

1. Classification of safety signs

The safety signs in this manual and on the machine adopt "image-text safety sign" and "graphical safety sign".

A. Graphical safety signs

This kind of safety sign uses graphics to show safety warning information, which is easy to understand and clear at a glance.

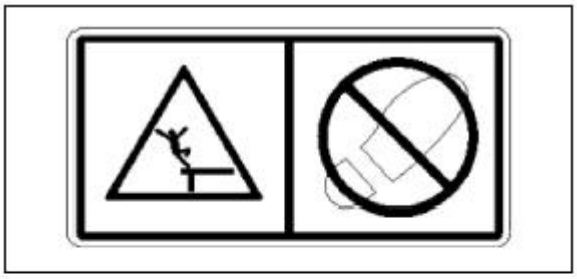

B. Image-text safety signs

This kind of safety sign is illustrated with images and corresponding text instructions, which are used for those places where the graphics cannot fully express the safety information and need to be explained in combination with words.

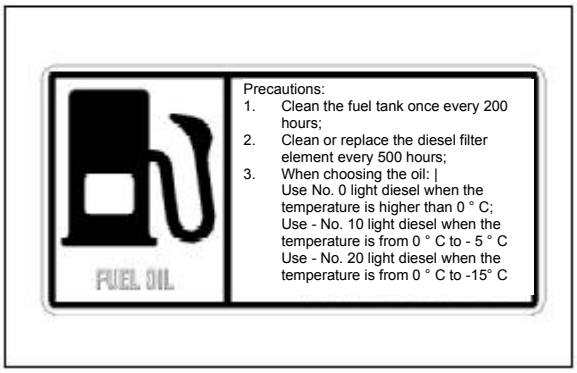

2. Safety sign pasting location

The sign shown in the graphics is only the "safety sign" part of all signs, and the rest of the function signs will be introduced in the following chapters.

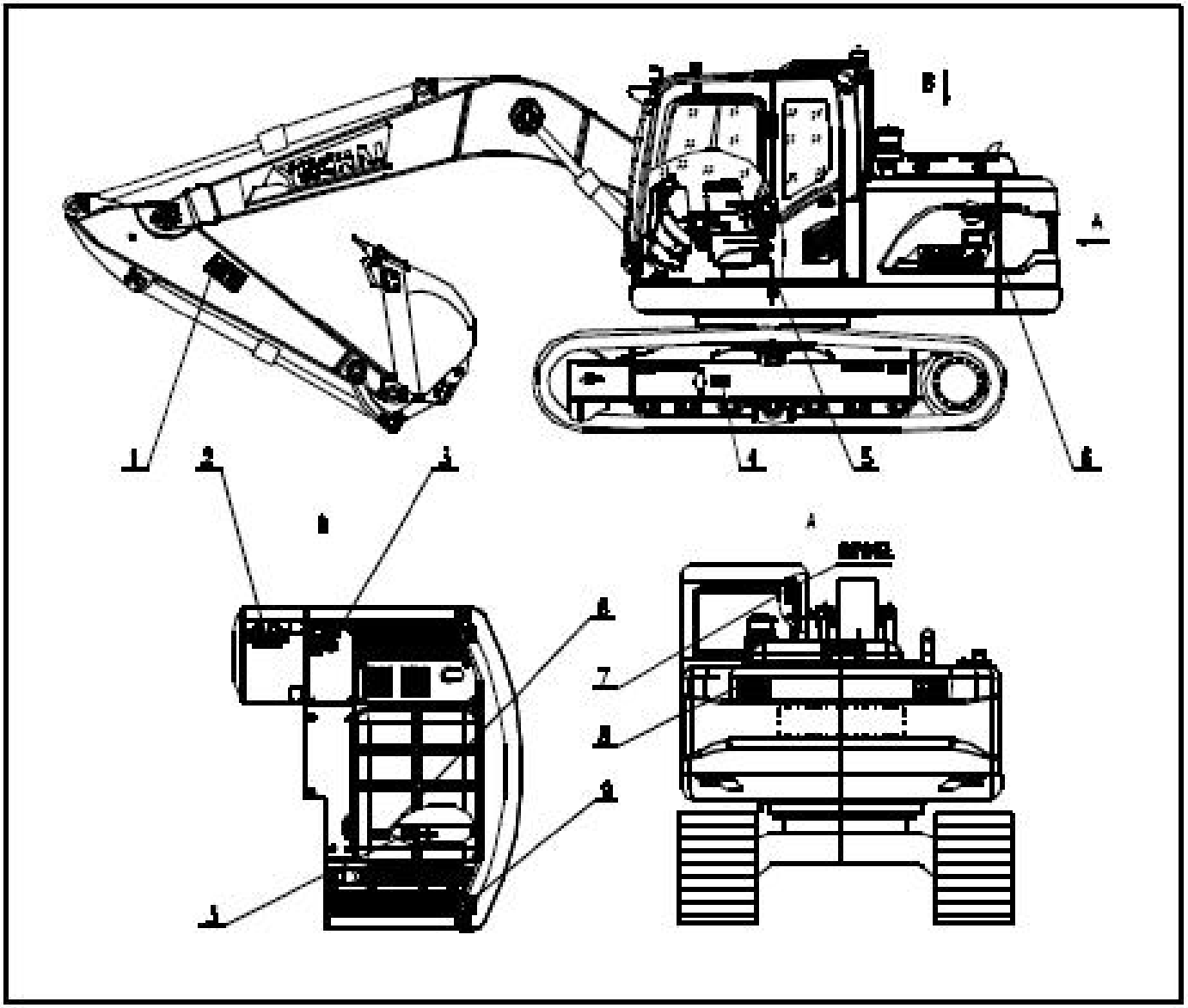

3. Safety labels and other signs

1) Pay attention to and stay away from the working devices

Movement of the working devices can cause personal injury. A safe distance must be kept from the working area of the working device.

2) Please keep safe when getting on or off the machine

When getting on and off the car, move slowly, grab the handrails on both sides, face the machine, and use the steps and track shoes on the machine.

3) Read the instruction manual carefully

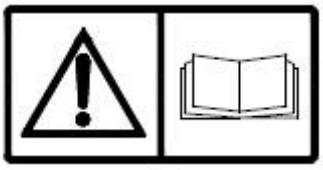

Before operating, maintaining, disassembling, assembling, transporting the machine, please always read the instruction manual

4) Lock sign

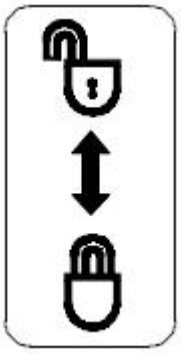

5) Grease filling sign

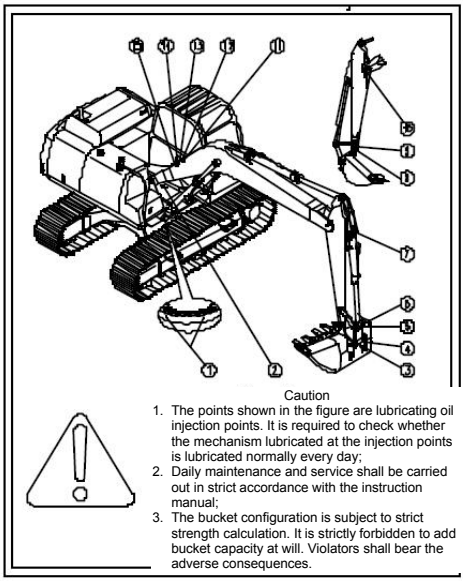

6) Safety information for attention during operation and maintenance

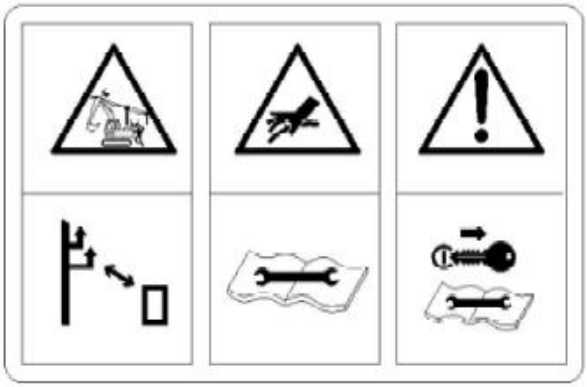

7) Pay attention to the danger of high-pressure oil injection when adjusting the tension of the track

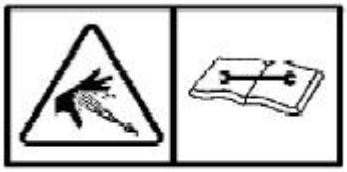

8) Rotation center

9) Cable lifting combination

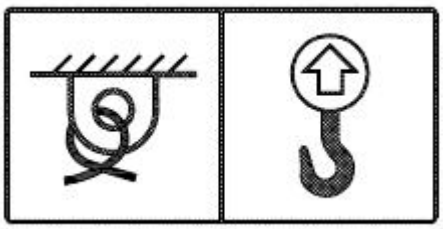

10) Keep staying away from the excavator

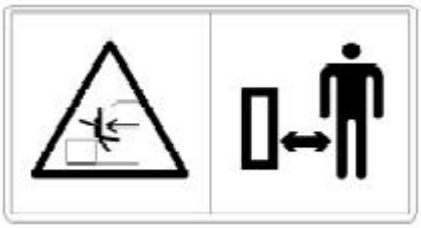

When the machine is rotating, the upper rotating body may pinch your body, please do not enter the rotating range.

11) Please lock it tightly after opening the flip window of the cab

Unlocked windows will suddenly close due to some external force or machine vibration, which may cause personal injury.

12) The engine should be shut down when overhauling and adjusting the inside of the machine

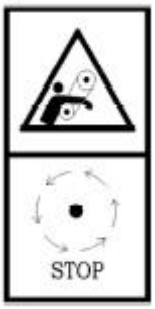

13) Fuel filling sign

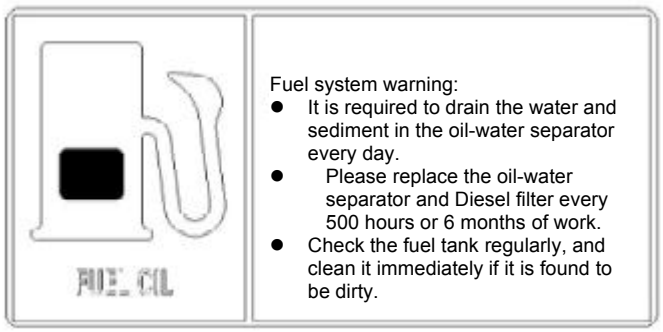

14) Fire sign

15) Hydraulic oil filling sign

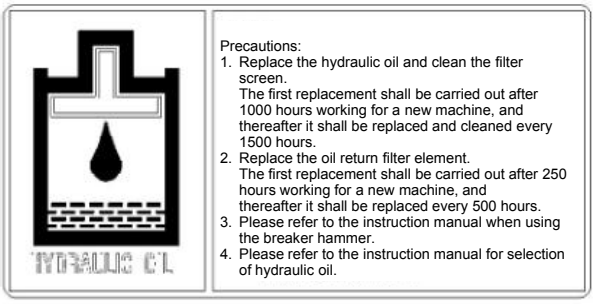

16) The container cover of hydraulic oil and engine coolant cannot be opened at high temperature

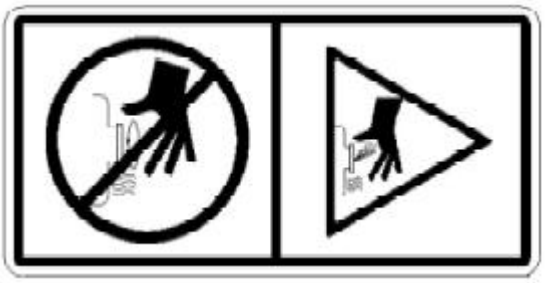

The high temperature hydraulic oil and coolant have high pressure. When opened at this time, the hot oil will be sprayed out, causing personal injury. Wait for it to cool down before removing the cover.

17) No stepping and easy falling

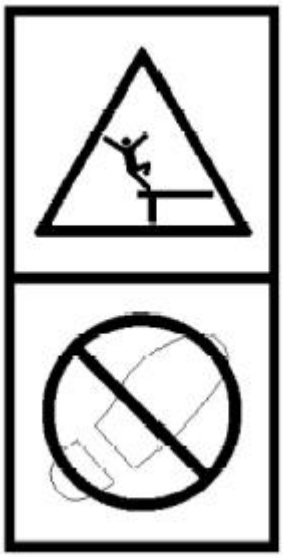

Do not step on or stay in this area. There is drop risk.

18) Directions for escape warning sign

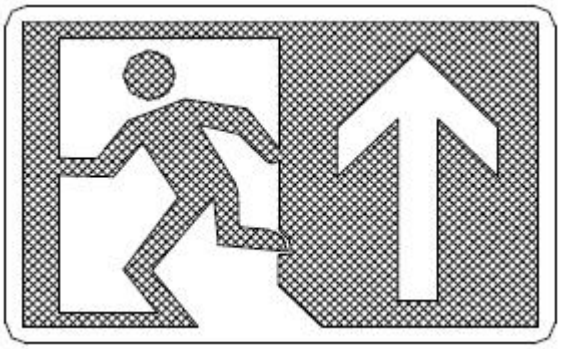

19) Lifting sign

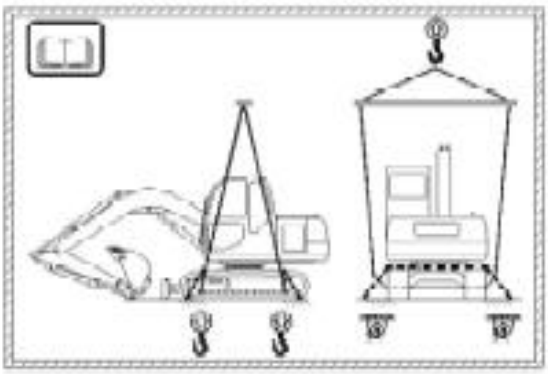

20) Be aware of toxic gases

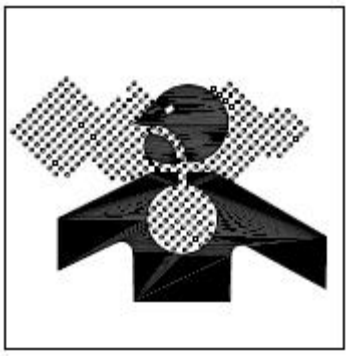

Toxic gases or toxic fumes can suffocate people.

21) High pressure fluid (injection, leakage/spray) hazard

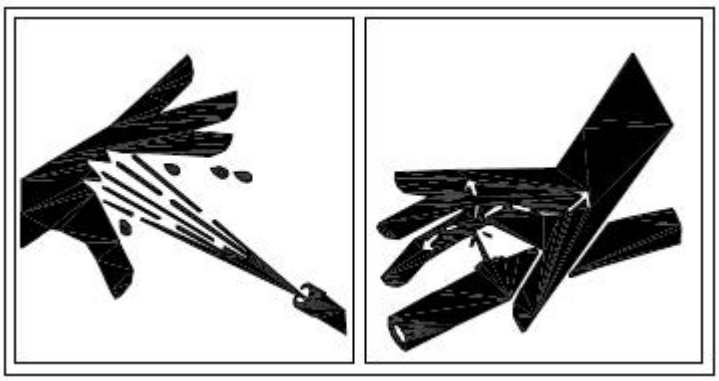

Do not feel the leakage point of high pressure fluid by your hands or other parts of your body, and do not be sprayed by high pressure fluid, otherwise it will cause human injury.

22) High-altitude wires warning sign

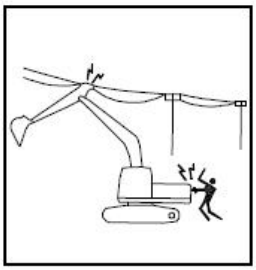

23) Fire extinguisher

24) No smoking, no fireworks

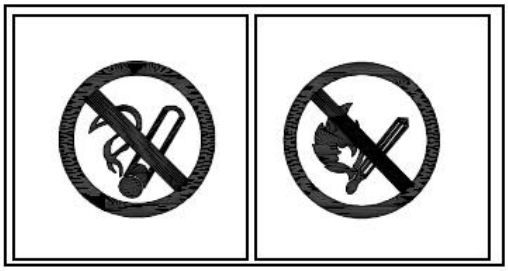

25) Watch out for explosions

26) Precautions for the use of emergency hammer

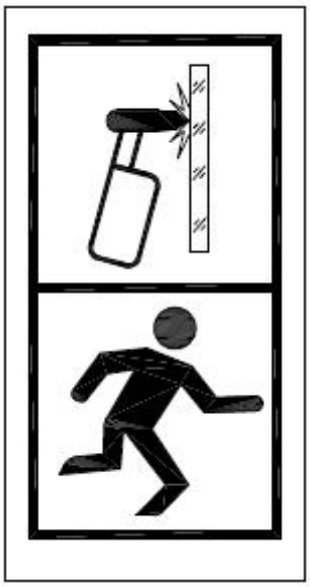

Read it carefully and keep it in mind, in case you need it from time to time.

27) Accumulators and gas spring high-pressure devices are not allowed to be disassembled, drilled, cut or hit, and you should be kept away from open fire or high temperatures

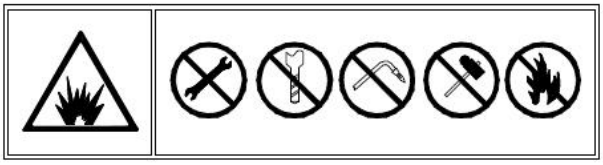

These parts contain high-pressure gas, improper handling can cause injury. Please ask an experienced person to handle it.

28) Please refer to the instruction manual and relevant data during electrical maintenance

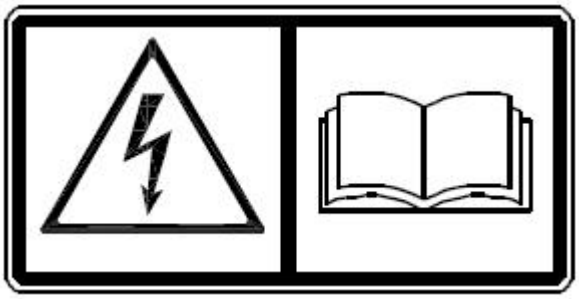

Electrical systems are prone to dangers such as electric shock, so you must follow the instructions and other relevant instructions when repairing.

29) Be careful of personal injury caused by high temperature parts such as engine, water tank, muffler, and engine fan

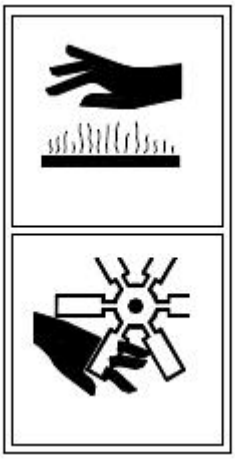

Do not touch it directly. Turn off the engine when repairing these parts and wait for the temperature to drop to the appropriate temperature.

30) Flip window warning sign

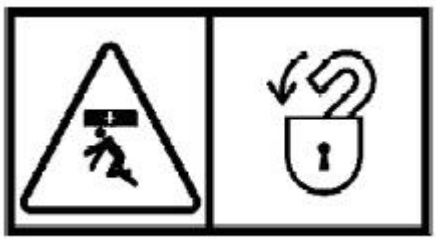

31) Tool box sign

Safety in the workplace

Know the area where you will work as much as possible in advance. Please check:

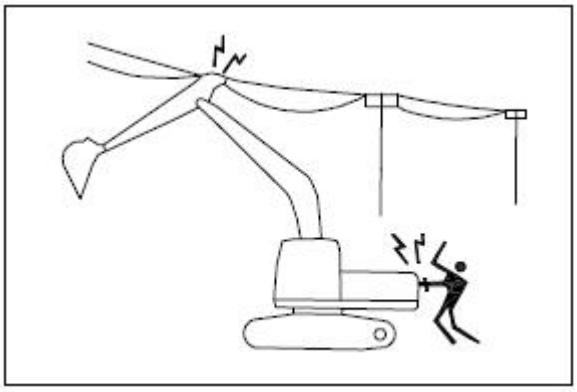

1. The location of the slope.
2. Open ditch
3. Falling objects or hanging objects
3. Soil condition (soft or hard)
4. Standing water and swamp area
5. Rocks and stumps
6. Boundary of buried foundations, pillars or walls
7. Boundary of buried garbage or filling soil.
8. Holes, obstacles, mud or ice
9. Traffic volume
10. Dense dust, dense smoke, dense fog
11. The exact location of buried or suspended pipelines for electricity, gas, telephone, water, sewage or other public pipelines. If necessary, ask the utility company to mark, close or move these facilities before you start work.

Warning: Before starting the excavation project, please contact the local utility service system and department.

12. When constructing in a building, figure out the headroom for the head, the porch and the aisle, etc., and the load-bearing capacity of the floor and ramp. Ensure adequate ventilation during indoor operation. What you are unclear about will hurt you.
13. Understand the precise distances between wires, telephone lines and machines, and distances between machines and the ground. If possible, it is best to cut off the power supply. If you can't cut off the power, ask the signalman for guidance.

Warning: Touching or approaching the power supply or the machine connected to the power supply can cause electric shock. Do not let any part of the machine get close to the power cord in the air. Unless necessary safety precautions have been taken. Please be very cautious.

14. It must be ensured to keep the legal minimum distance from underground gas pipes, cables, telephone lines and water pipes.

Warning: if you look in from the damaged cable end, the cut optical fiber will seriously hurt your eyes.

15. It is forbidden to use this machine in culverts\underground operations.

16. It is forbidden to operate in places where there are chemical hazardous substances.

17. It is forbidden to use in explosive situations.

Warning; it is strictly forbidden to carry or lift people with excavators. It is strictly forbidden to lift materials by excavator.

Warning: before operating the machine, you must wear a seat belt, honking the horn, and confirm that there is no one around the working area before starting work.

1. Start the machine

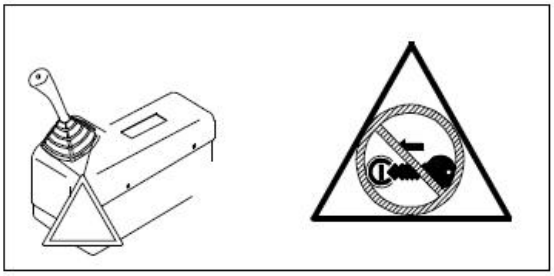

A. Safety rules for starting the engine

1) Before starting the engine, you must sound the horn to warn.
2) Except for the operator, no other people are allowed.
3) Only allow to sit on the seat to operate the machine.
4) It is not allowed to start the engine by short-circuiting the starter motor.
5) The machine must be preheated in cold weather.

Warning: 1. It is not allowed to start the engine when a warning sign prohibiting engine starting is hung on the joystick.

B. After starting the engine

The following must be checked after starting the engine:

1) Whether the seat belt is fastened
2) Whether the moving parts such as working device, bulldozing device, walking, turning, and working device deflection are normal
3) Whether the sound, vibration, smell or instrument of the machine is abnormal
4) Whether there is leakage of oil and fuel.

2. Walking and turning

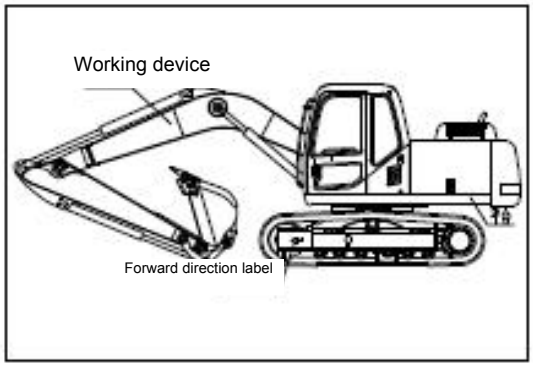

1) The excavator must walk and work on a solid ground that is 1.5 times larger than its width.

2) Honk the horn before walking and turning to warn people in the working area.

3) Please turn the upper part of the machine platform to a proper position before walking. The machine moves forward by pushing the walk joystick forward if the working device is consistent with the forward direction label; the operation is opposite if the working device is opposite to the forward direction label.

4) Close and lock the cab door before walking. The cab windows, flip windows and sunroof are allowed to be opened, but they must be locked.

5) If there is an invisible area at the rear of the machine before the machine is backed up or rotated, a signal commander shall be arranged.

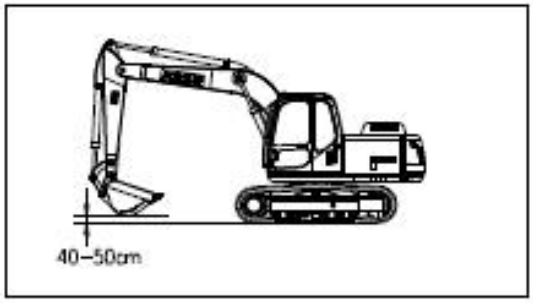

- Safety rules when walking

1) When the machine is walking on a flat road, you must lower the boom, retract the stick, and maintain the best position of the center of gravity. Keep the bottom of the bucket at a distance of 40-50 cm from the ground.

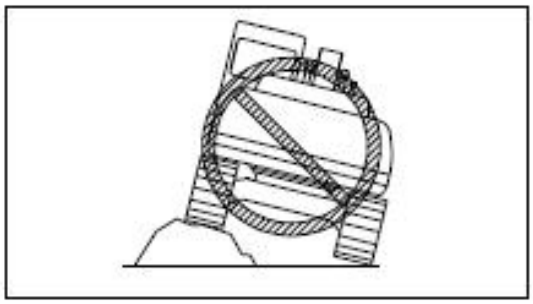

2) When the machine is walking on rough and uneven roads, you should walk at a low speed and do not turn suddenly, otherwise it may cause the machine to overturn and endanger your personal safety.

3) The machine cannot walk on the obstacles leaning to one side, which may cause the machine to tip over.

4) When the machine is walking or in operation, be sure to keep a safe distance from people, buildings or other machines to avoid contact with them.

5) When walking through underground passages, under bridges, or under power lines and other places with limited heights, be sure to have gesture commands. And pay attention to keeping a safe distance from the commanding personnel.

6) The platform must be locked when going uphill or downhill.

7) When passing over bridges, buildings or supports, first confirm whether they are sufficient to support the weight of the machine.

8) When walking on the highway is needed, consult the local traffic management department first, and get their permission before driving on the highway.

3. Walking or working on a slope

Excavator walking and working on slopes are extremely dangerous, so be careful.

1) It is recommended the excavator does not move up or down the slope with a long gradient that is greater than 20 degrees.

2) When the machine is working, especially when moving uphill and downhill and working on dangerous areas, the safety belt must be fastened.

3) When the excavator is moving uphill, the drive wheel should be in the downhill direction, the boom and stick are fully extended and parallel to the slope, the bucket teeth are 20-30 cm away from the ground. The excavator moves uphill at a low speed after the platform is locked.

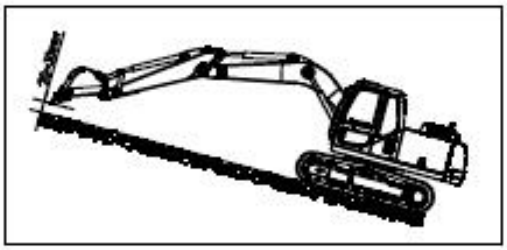

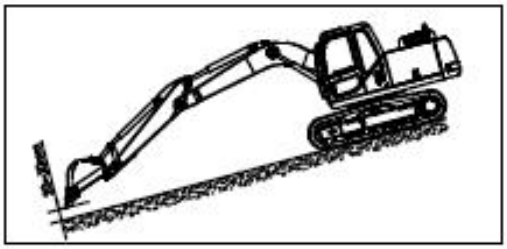

4) When the excavator is moving downhill, the drive wheel should be in the downhill direction, the boom and stick are fully extended and parallel to the slope, the bucket teeth are 20-30 cm away from the ground. The excavator moves downhill at a low speed after the platform is locked.

5) Do not make a turn on the slope or cross the slope. Be sure to go down to a flat place to change the position of the machine, and then go up the slope.

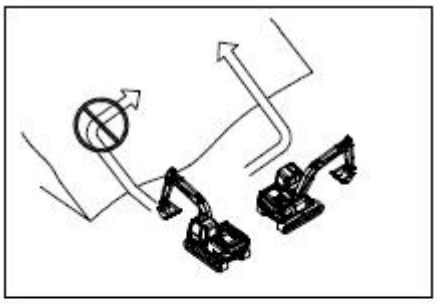

6) When working on a slope, you must start from a high place and gradually dig down the slope, and the unloading position should be in the uphill direction.

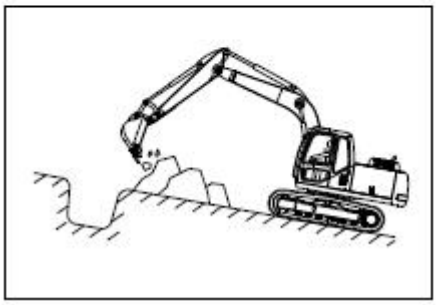

7) Walk on grass, fallen leaves or wet steel plates at a low speed, because even in the case of a very small slope, the machine is in danger of slipping.

8) It is strictly forbidden to turn sharply when going uphill or downhill, otherwise the machine will tip over.

.

Danger

Stopping on a slope is very dangerous! If it is unavoidable, the following must be followed: if the engine stalls on a slope, immediately lower the bucket to the ground, and place all handles in the neutral position, and then restart the engine. Even if the machine stops for a short time on the slope, lower the bucket to the ground, pull all the handles in the neutral position, and place enough fixed obstacles at the lower end of the crawler track.

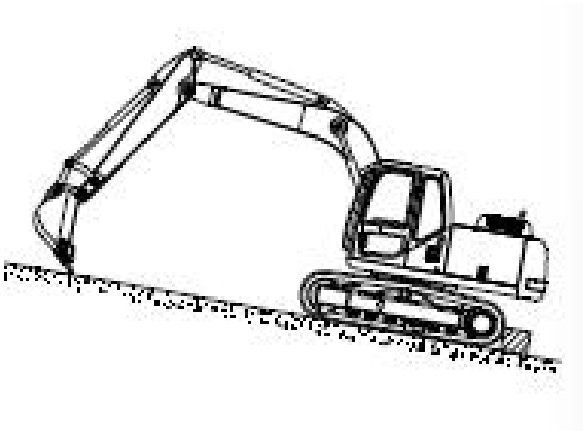

10) It is strictly forbidden to drive or work on a slope with a longitudinal gradient greater than 25 degrees.

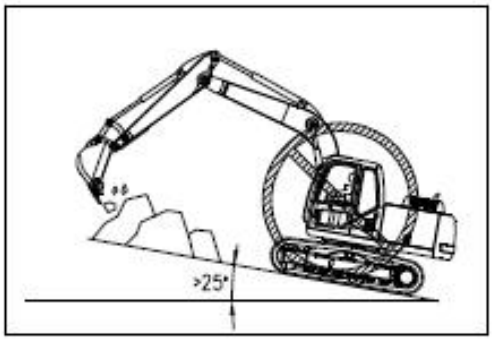

11) It is strictly forbidden to drive or work on slopes with a lateral gradient greater than 15 degrees.

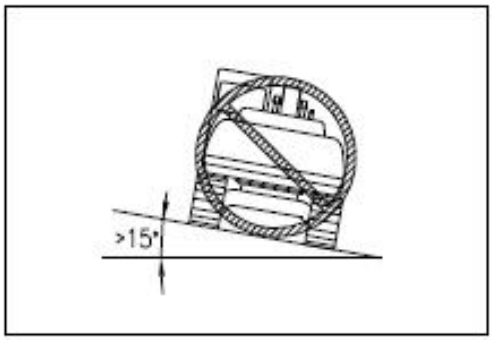

12) Keep the balance of the machine as much as possible, and it is strictly forbidden to walk on rocks or cross obstacles.

13) No direction change is allowed on slopes.

14) When going uphill, make sure that the engine and hydraulic oil have been properly preheated, otherwise it will cause an accident.

15) When the excavator is on a slope with two tracks in a 90-degree direction, the rotation is very dangerous and should be avoided. When turning is necessary, make the bucket close to the ground and close to the machine at the same time, and turn it slowly with the track towards the top of the slope.

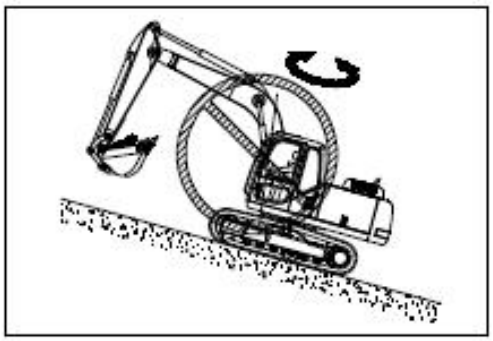

16) When working on a slope, the machine may lose its balance and tip over when operating the swing or the working device. This can cause serious injury or equipment damage. Therefore, when performing these operations, use soil to build a strong platform that can keep the machine level.

4. Safe excavation

Warning: The operator must memorize the functions of each joystick to avoid wrong operation.

Warning: Improper use of the excavator can cause tipping over and skidding. Memorizing this section is a correct guide to ensure your personal safety.

1) Irrelevant people in the excavation site should be cleared out before work.

2) Confirm that the worksite can fully support the machine before driving in.

3) Keep the two tracks of the excavator on the same plane as much as possible before operation.

4) Before digging, make sure that there are no cables, air pipes or water pipes under the worksite, or the specific location has been clarified.

5) When the machine is moving backward (such as digging a trench, etc.), it should be observed whether the displacement route is smooth and whether there are obstacles. It can be moved only when safety is ensured, otherwise, it will cause the machine to tip over.

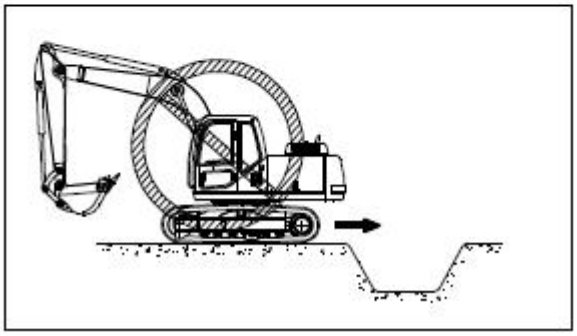

6) When the bucket is subjected to special resistance on the ground, do not walk or rotate, otherwise, the machine will be damaged.

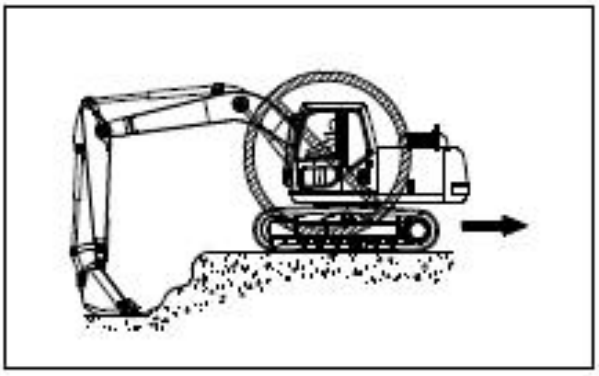

7) During operation, if the hydraulic cylinder is operated to the end of the stroke, the force will act on the limit ring inside the cylinder, thereby reducing the service life of the machine. To prevent this from happening, a small margin should always be kept when operating the hydraulic cylinder.

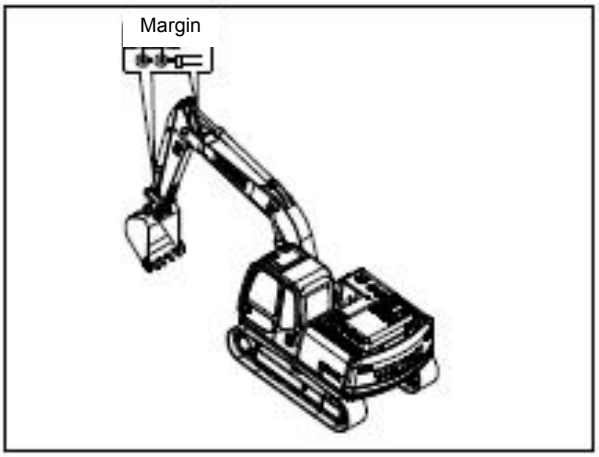

8) When digging deeply, avoid the bottom of the boom or the hose of the bucket cylinder from touching the ground.

9) When operating the machine, avoid foreign objects touching the boom, stick, bucket and cab.

10) When the machine is rotating, avoid touching the engine hood and rear counterweight.

11) When lowering the boom, try not to stop suddenly to avoid machine operation damage and improve work safety.

12) Do not dig into the machine body.

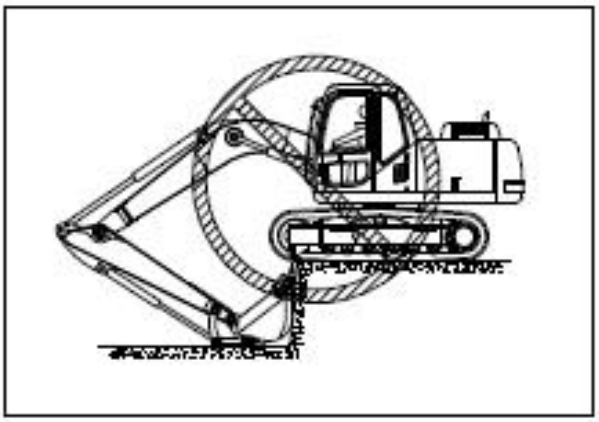

13) Do not excavate when the track is off the ground, otherwise, the machine and structure will be damaged.

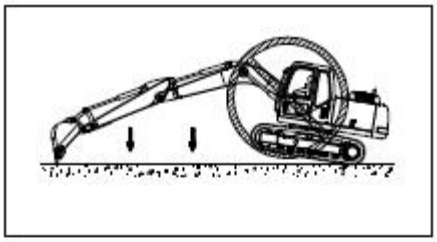

14) Do not use the weight of the machine to increase the digging force of the machine.

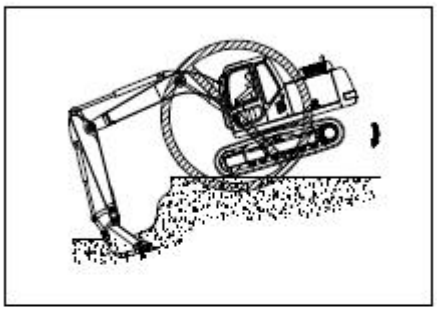

15) Do not use the falling force of the bucket as a pick, breaker or pile driver, as this will cause excessive force on the rear of the machine. This will not only damage the machine but also be very dangerous.

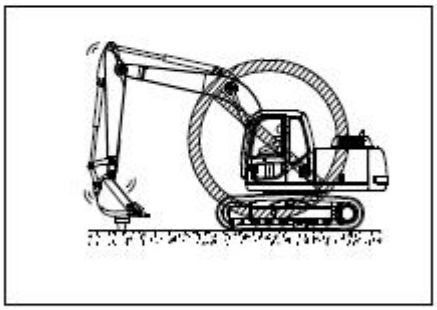

16) Do not use the bucket too much to level the road, otherwise, the components will damage the machine due to overload operation.

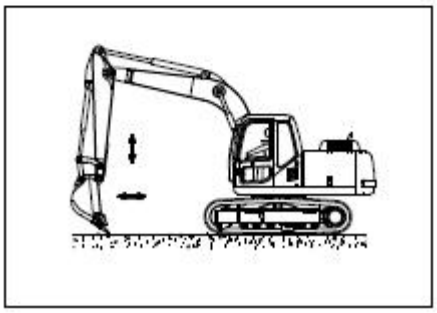

17) Do not use the falling force of the machine to excavate, otherwise, the machine will be damaged.

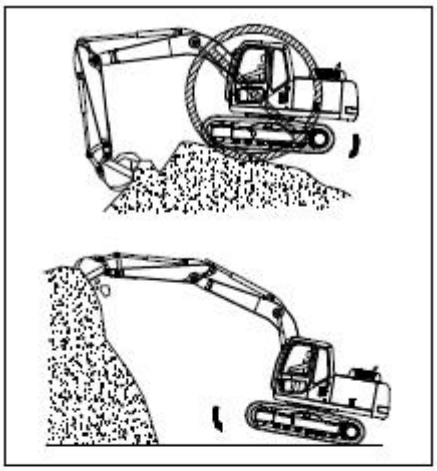

18)Do not use turning force to compact the soil or damage mounds and walls. When turning, do not insert the bucket teeth into the soil, as these actions will damage the working device.

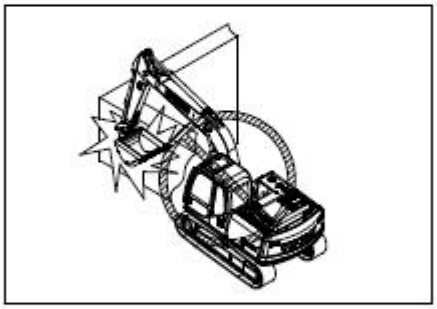

19) Do not dig the bucket into the ground and use walking force to dig, which will make the rear of the machine bear excessive force.

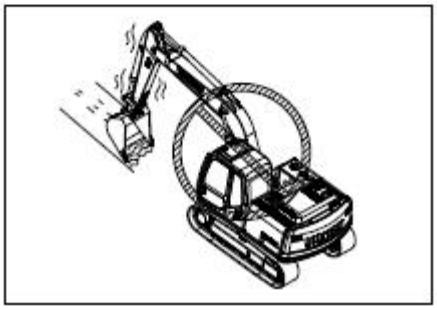

20) Do not dig the working surface under the suspended part, otherwise, there will be the danger of falling rocks or the suspended part collapsing and hitting the machine.

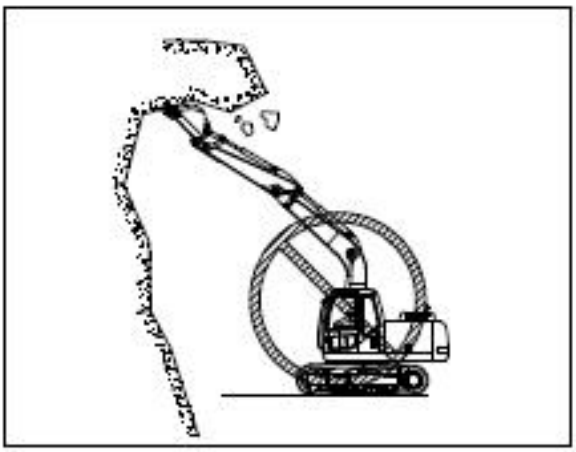

21) If the machine is operating in a site with falling objects or splashing hazards, the protective devices used for anti-falling objects and anti-splashing shall be installed.

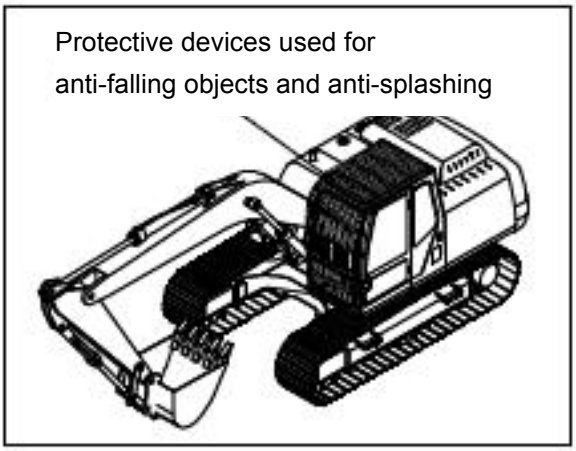

22) It is forbidden for the machine to drive or operate on soft roads or swamps.

23) Please do not use excavators to drag other equipment or objects.

24) There may be a blind area at the rear of the machine, so make sure the rear of the machine is safe during operation.

5. Anti-dumping, anti-skidding and disposal during operation

Warning: 1) When you have to turn on a ramp, you can only turn in a large arc. When the machine is about to turn to the right, extend the boom and stick to the left, the bucket is about 30 cm away from the ground, and lock the platform. Vice versa.
2) When skidding, immediately press the bulldozer shovel and bucket to the ground.
3) When the machine is overturned, the driver must not jump off the car, but should firmly grasp the handrail in the cab or the column of the cab. Jumping from a car can easily cause casualties.

The machine is extremely easy to tip over in the following situations and must be avoided:

1) The machine shifts on uneven ground, with two tracks high on one side and low on the other, or more than half of one track is suspended in the air.
2) When one track contacts loose soil and the other track contacts solid soil.
3) When there is a cave or mud pit in the ground on one side of the machine.
4) When walking on a slope with a longitudinal gradient greater than 25°, and unloading heavy objects in the downhill direction.
5) When walking on a slope with a lateral gradient greater than 15°, and unloading heavy objects in the downhill direction.
6) On the slope, the two tracks and the slope are in a direction of 90°, and the platform rotation is greater than 90°.
7) When working on a slope, the machine turns sharply, the platform turns quickly or stops suddenly.
8) When the machine swings down 180° on a slope.
9) When the road surface where the machine moves on is uneven during the backward operation (trenching, etc.).
10) When the machine is digging deep to the bottom of the machine body.
11) Walking on the frozen ground.
12) When the two tracks are stuck with oil or lubricating oil, the machine is easy to slip.

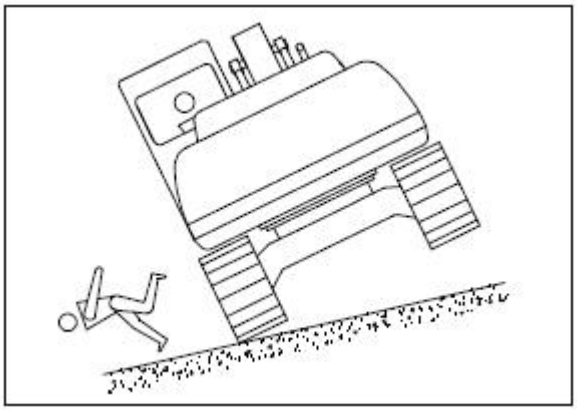

6. Turn off the machine

Refer to the section "Parking the machine" in this Chapter.

Machine transportation and handling

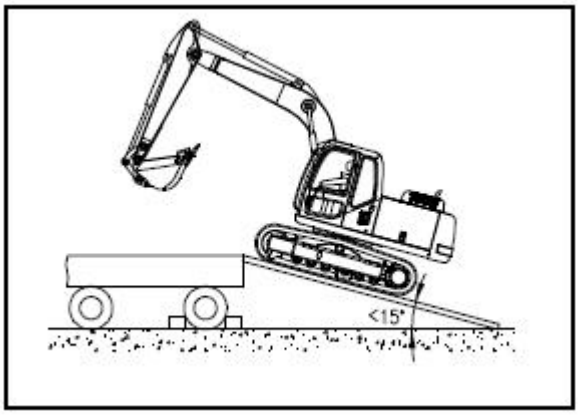

The transportation (loading and unloading) of excavators must strictly comply with the safety principle.

- The national and local industry related rules for safe transportation (loading and unloading) or good habits must be observed when transporting excavators.
- When transporting the excavators, it is strictly prohibited to carry any personnel and other objects in the cab of the excavator, and it is strictly prohibited to mix loading and transportation of man and machine.
- When loading and unloading the excavator, it is strictly prohibited to have any person and objects that may hinder the loading and unloading within the moving radius of the crane boom (including the lifted objects)
- When loading and unloading the excavator, it is strictly prohibited to have any person and objects that may hinder the loading and unloading within the traveling range of the loaded and unloaded excavator (including the turning range of the excavator).
- In addition to using the hoisting method or driving directly from the wharf, the excavator can also drive on the transport vehicle by using two approach slabs with sufficient strength. The inclined angle of the approach slab shall be less than 15 °, the slope length shall be more than 3.5 times of the height, and the width of the approach slab shall be equal to 1.2-1.5 times of the track width.
- Before going up and down the ramp, be sure to put down the positioning handle of the rotary platform to prevent the platform from rotation.
- It is not allowed to pull any other handle except the walking handle when going up and down the slide way.
- The machine must be loaded or unloaded on solid and flat ground.
- When driving the machine on the road, make sure that clearance flags, lights and warning signs are ready and that others can see these signs; Ensure that the "Slow Moving Vehicle" sign can be seen by the vehicles behind.
- Crawler type machines may damage the road surface and may be subject to some restrictions when driving on the road surface, so please use trucks to transport the machines when driving on these roads.

Downtime for maintenance

Warning: When carrying out any maintenance work on the machine, a maintenance warning sign must be hung on the joystick.

- The excavator must be parked on solid and flat ground.
- After the excavator is stopped stably, you must lower the bucket to the ground, run the engine at idle speed for three minutes, stop it and pull out the switch key.
- Release the pressure from all hydraulic systems.
- When the machine is forced to stop on a slope, the sufficient obstacles should be set up in the downward direction of the crawler tracks on both sides.
- Be sure to keep a certain distance from other machines when parking.
- When repairing the electrical system or performing electric welding operations, it is necessary to remove the negative cable of the battery to prevent the flow of current.
- Before servicing the machine, if you need to support the machine or accessories to work, support the machine or accessories firmly, and do not work with only one jack supporting the machine.
- After the machine is started, do not lubricate or repair, and do not let your hands, feet or clothing contact the power rotating parts.
- To carry out maintenance work while the engine is running, the machine must be supervised by someone.
- Do not put the loose items in your pocket to prevent them from falling into the moving parts.
- The high pressure liquid will splash the eyes or skin, so it should be avoided during maintenance.
- Clean up all the sundries inside the machine to prevent possible wrong operation, causing injury to personnel or damage to the machine.
- Properly dispose of waste liquids, do not pour oil into the ground, drains, streams, ponds, or lakes, and comply with environmental protection regulations when draining engine oil, fuel, antifreeze, plastics, battery solution and other hazardous wastes.

Fire, explosion and poisoning prevention

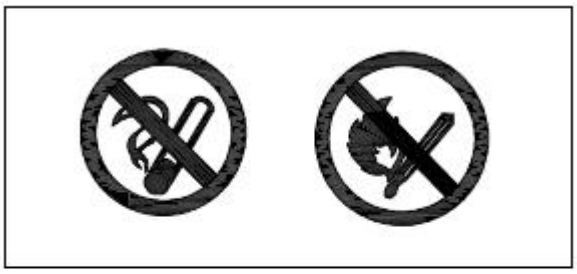

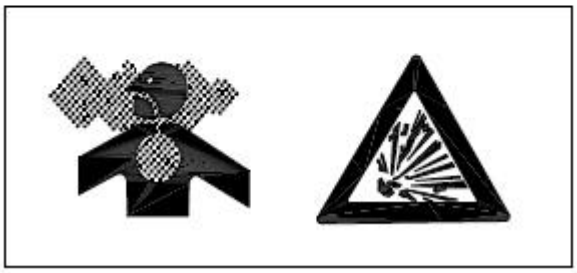

- Avoid contact with wires when the excavator is transported, walked, or excavated, otherwise it will cause serious casualties.
- Excavator electrical appliances and wiring should be checked frequently. If they are found to be damaged, or aging, they must be replaced in time to prevent a short circuit of electrical wiring and causing fire.
- Keep the wire connectors clean and securely fixed. Check whether the wires are loose or damaged every day, tighten loose joints or wire clamps, and repair the damaged wires.
- Do not place flammable and explosive materials inside the excavator to prevent fires.
- When refueling, the engine must be stopped. Refueling at a place far away from the fire and does not leave the machine.
- When refueling, do not allow the fuel to spill onto overheated surfaces or parts of the electrical system.
- After refueling, wipe off the spilled fuel or engine oil, and tighten the fuel and engine oil tank caps.
- Remove the leaves, wood chips, paper chips, and other flammable materials accumulated or stuck to the engine, exhaust pipe, muffler, and engine compartment in time.
- Do not place oil-soaked rags in the machine to avoid spontaneous fire and burning.
- The user should configure a fire extinguisher in the machine and put it in a place where it is easily accessible.
- When welding the machine, it is strictly forbidden to do without isolating the hydraulic oil pipeline and the fuel pipeline.
- To prevent fires caused by hydraulic pipelines: check whether the clamps, guards, and cushions of all hoses and pipes are firmly fixed in place. If it is loose, it will vibrate and rub against other parts during operation, causing hose damage, high pressure oil spraying, and fire hazards or serious injuries.
- Keep the battery away from fire and avoid high temperature, otherwise, it will cause an explosion.
- For excavators with a sealed cab, check the tightness of the intermediate partition to prevent engine exhaust gas from entering the cab and causing driver poisoning.
- It is strictly forbidden to work in poorly ventilated areas to prevent the driver from suffocating.
- In the event of a fire, do not use water to extinguish the fire. Use a powder fire extinguisher or sand to extinguish the fire. You can also use a cover or tarp to extinguish the fire.

Battery

Safety rules for batteries

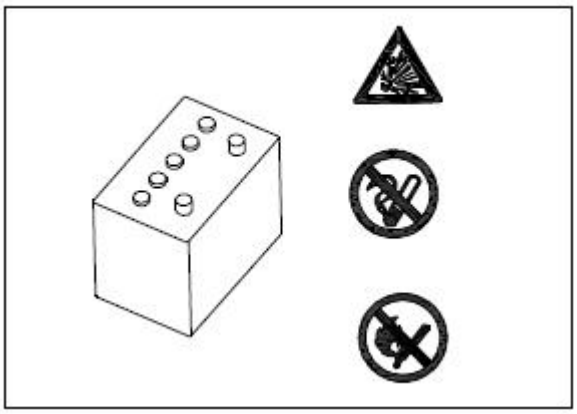

The battery electrolyte contains sulfuric acid, which generates flammable and explosive hydrogen gas. Wrong operation can cause serious injury or fire. Therefore, the following precautions must be observed:

- The battery cover is equipped with an indicator to display the battery charge state. When the indicator displays in green, the battery can be used normally. The battery shall be charged in time when the indicator displays in black, and the battery shall be replaced immediately when the indicator displays in white.
- When operating the battery, wear safety glasses and rubber gloves.
- Do not smoke or use open fire near the battery.
- If the eyes, clothes or skin are splashed with sulfuric acid, rinse them with plenty of water and seek medical attention immediately.
- Before operating the battery, turn the key switch to the OFF position.
- Check the electrolyte level with a flashlight, and turn off the engine when checking.
- The swelling at the end of the closed battery indicates that the battery has frozen. When the battery is frozen, do not charge the battery or jump-start the engine.
  Do not heat the frozen battery over15℃, otherwise, the battery may explode.

Anti-explosion of battery

Warning: Electric sparks or flames will cause the hydrogen in the battery to explode. To prevent explosions, please note:
1) When disconnecting the battery cable, first disconnect its cathode (-) cable;
2) When connecting the battery cable, the cathode (-) cable should be connected last;
3) Metal components cannot be used to short-circuit the terminals of the battery;
4) Do not weld, grind or smoke near the battery.

Due to the risk of sparks, follow the below steps.

- Install the battery firmly to the determined position.
- Do not let tools or other metal objects touch between the battery terminals. Do not drop tools or other metal objects near the battery.
- Connect or disconnect the positive and negative poles of the battery in the correct order. The battery terminals should be firmly fixed.
- When charging the battery, flammable hydrogen will be generated. Therefore, before charging, remove the battery from the machine, put it in a well-ventilated place, and remove the battery cover.
- Tighten the battery cover firmly.

Note: When repairing the electrical system or performing electric welding operations, remove the negative terminal of the battery to prevent the flow of current.

1. Safety rules for high pressure oil

There is always pressure inside the hydraulic system. When inspecting or replacing pipes or hoses, be sure to check whether the pressure in the hydraulic oil circuit has been released. If the oil circuit is still under pressure, serious injury or damage will be caused, so follow these regulations:

1) Do not check or replace when there is pressure in the hydraulic system.
2) The surrounding area is wet if there is any leakage in the pipe or hose. So check if the pipe or hose is broken, and the hose is swollen. Wear goggles and leather gloves when performing an inspection.
3) The high pressure oil leaking from the small holes will penetrate into the skin, and there will be a risk of blindness if it directly touches the eyes. If you are injured by high pressure oil hitting your skin or eyes, rinse with clean water and contact your doctor for treatment immediately.

2. Safe operation of high pressure hoses

If the high pressure hose leaks oil or fuel, it may cause a fire or operation failure, resulting in serious injury or damage. If the bolts are found to be loose, stop the work and tighten the bolts to the specified torque. When welding the machine, it is strictly forbidden to do it without isolating the hydraulic oil pipeline (hose). If any damage to the hose is found, stop the operation immediately and get in touch with the Yuchai agent.

If the following problems are found, replace the hose:
1) Damaged or leaking hydraulic pipe joints;
2) The cladding is worn or broken, or the steel wire of the reinforcing layer is exposed;
3) The cladding swells in some places;
4) The movable part is twisted or crushed;
5) There are impurities in the cladding.

3. Safety rules for high pressure oil

The hydraulic oil that is not cooled during or after work is at high temperature and high pressure. To prevent scalding caused by sprayed oil or contacting hot parts when checking or draining oil, wait until the oil cools to the temperature that can touch the cover or plug before starting operation. Even if the oil has cooled, slowly loosen the cover or plug before removing the cover or plug to drain the internal pressure.

4. Release the internal pressure of the hydraulic system

The hydraulic oil in the hydraulic pipeline is at high temperature and high pressure when the machine is working intermittently. The oil may spray out when removing the oil port, so turn the oil filler cap before removing the cap to relieve internal pressure.

1) If the working device is not in the state shown in the figure, start the engine at a low speed, extend the bucket cylinder, and retract the stick cylinder. Then land the bucket and turn off the engine.

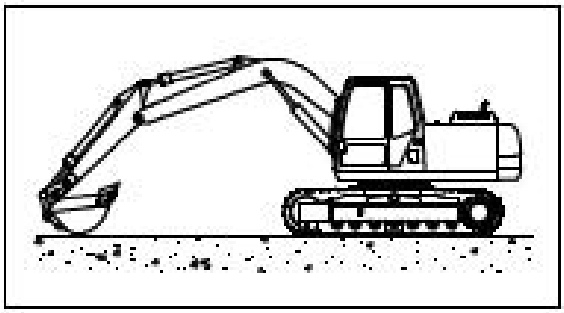

2) Within 15 seconds after turning off the engine, turn the start switch to the ON position, and operate the joystick (working device, walking) in each direction to release the internal pressure.

5. Safe operation of accumulator

⚠	Warning: The accumulator is a component filled with high pressure nitrogen, which may cause explosion and other hazards if used incorrectly. The accumulator cannot be disassembled, and the operation such as drilling and welding also cannot be carried out on it. Avoid the accumulator from being close to the fire source, and avoid collision and impact on the accumulator. Professional personnel shall be invited to dispose the accumulator.

The machine is equipped with accumulators in the control pipeline. The accumulators in the control pipeline are the pressure storage devices. When these devices are installed, the control pipeline can be operated for a short time even after the engine stops.

The working device can be lowered under its own weight by operating the joystick.

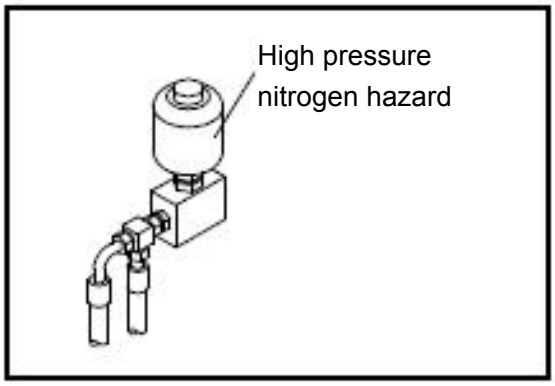

Pressure relief method for the control pipeline of the machine equipped with accumulators

1) Lower the working device to the ground, and then close the hydraulic breaker hammer or other accessories.
2) Turn off the engine.
3) Turn the key of the start switch to the ON position again to make the current flow in the circuit.
4) Adjust the safety lock control lever to the free position, and then operate the joystick of the working device and the accessory control pedal (if equipped) in the front, rear, left and right directions to release the pressure in the control line.
5) Adjust the safety lock control lever to the LOCK position in order to lock the control lever and the accessory control pedal.

3

Parts introduction

Overview of controls

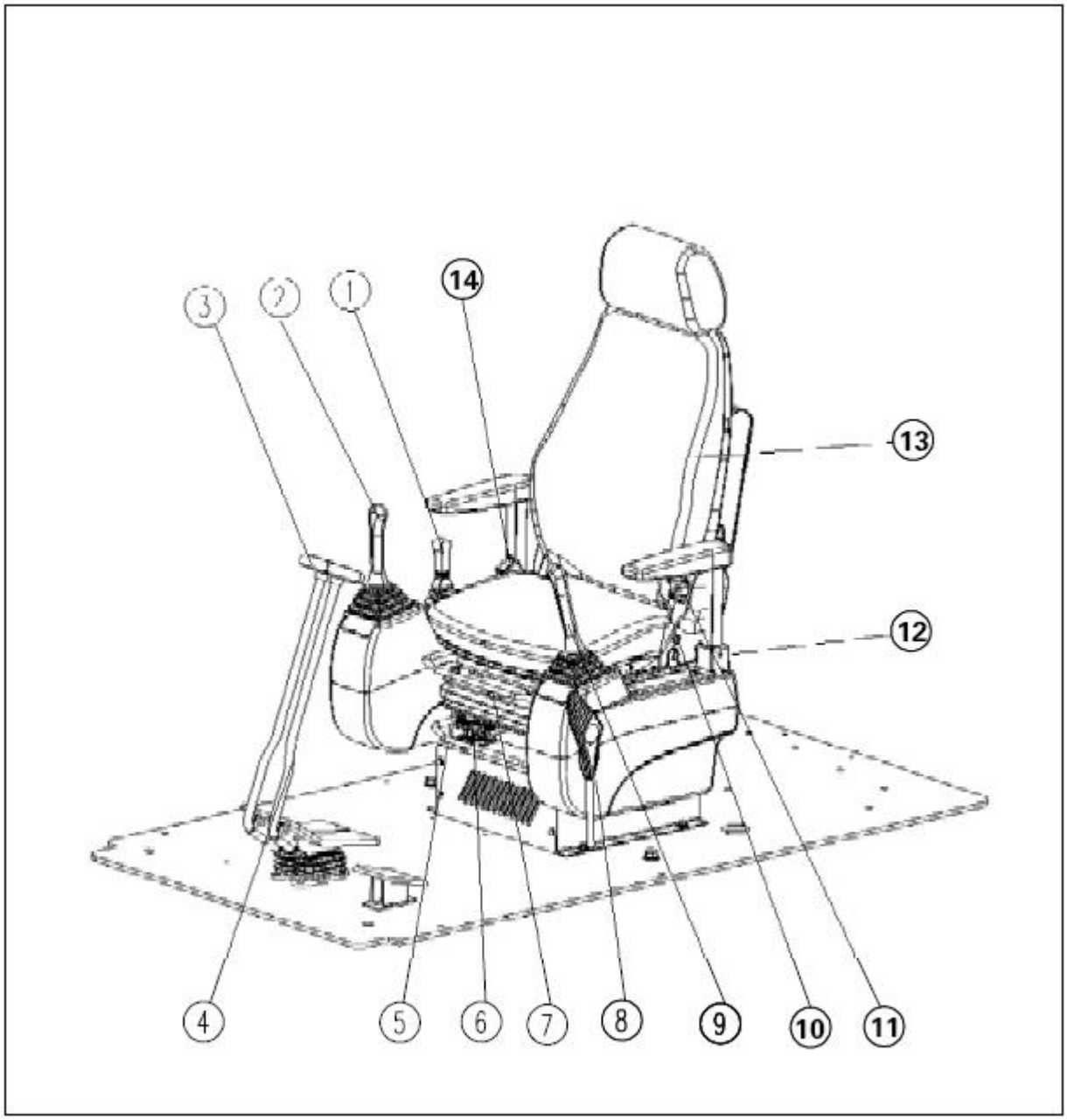

1. Bulldozing valve handle
2. Right pilot valve handle
3. Right walking joystick
4. Left walking joystick
5. Seat front and rear adjustment handle 1
6. Weight adjustment handle
7. Seat front and rear adjustment handle 2
8. Safety lock handle
9. Left pilot valve handle
10. Handrail reclining adjustment handle
11. Backrest adjustment handle
12. Handrail height adjustment handle
13. Seat
14. Seat belt

Driver's seat

Warning: accidental tipping or sudden movement of the machine may cause injury or even death. Therefore, for safety reasons, remember to fasten the seat belt and adjust the seat before starting the machine.

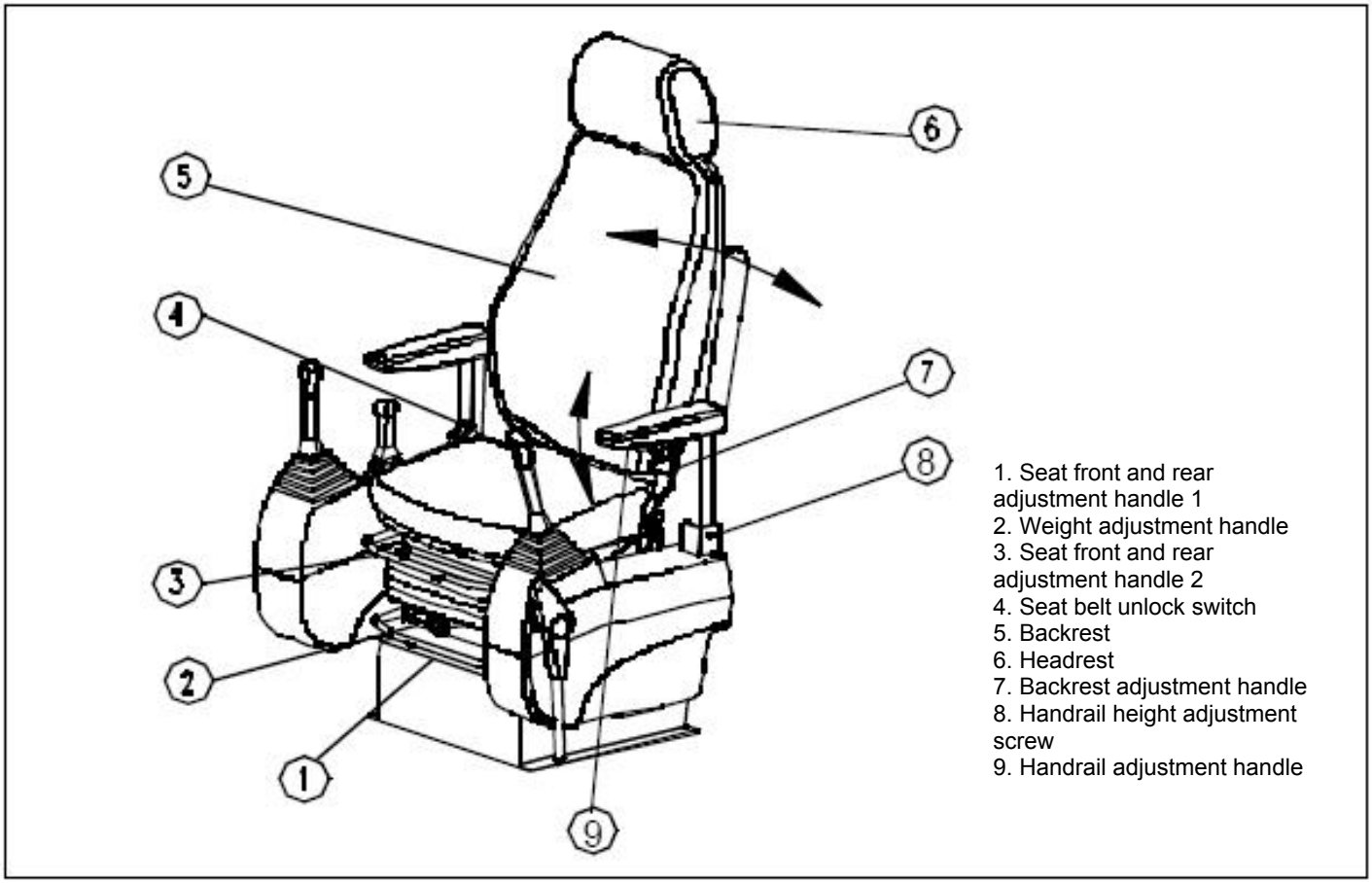

1. Seat front and rear adjustment handle 1
2. Weight adjustment handle
3. Seat front and rear adjustment handle 2
4. Seat belt unlock switch
5. Backrest
6. Headrest
7. Backrest adjustment handle
8. Handrail height adjustment screw
9. Handrail adjustment handle

- Seat front and rear adjustment: pull the seat front and rear adjustment handles 1 or 2 to allow the forward and backward movement. Loosen the handle and the seat will be locked. The position of seat and control box can be adjusted simultaneously through the seat front and rear handle 1; The seat position can be adjusted separately through the seat front and rear adjustment handle 2.
- Backrest adjustment: the backrest can be adjusted in 5 positions by pulling up the backrest adjustment handle, and the backrest locks in place after releasing the handle.
- Headrest adjustment: move the headrest adjustment handle backwards, and then push and pull the headrest to a suitable position.
- The handrail tilt adjustment: Turn the handrail tilt adjustment handle, the handrail can be tilted.
- Handrail height adjustment: Loosen the handrail height adjustment screw, adjust the handrail to a comfortable height, and then tighten the handrail height adjustment screw to complete the height adjustment.

Note: stop the machine when adjusting the seat. After adjustment, gently shake the seat to ensure reliable locking.

Seat belt

Warning: the seat belt is an important part of the machine safety system. Before operation, you must wear a seat belt. If you do not wear a seat belt, the cab or the machine may press on your body and cause injury when the machine tipped over.

Warning: before using the seat belt, check the installation of the seat belt for abnormalities. If the seat belt is worn or damaged, replace it.

● Even if you do not see any abnormality in the seat belt, you must replace the seat belt every 3 years. The production date of the seat belt is displayed on the manufacture date label of the seat belt.

● During operation, be sure to wear a seat belt.

1. Secure the seat belt

Hold the seat belt clip, check whether it is twisted, adjust the length of the seat belt, and then insert the tongue firmly into the buckle. Pull the seat belt slightly to check whether the seat belt is properly locked.

2. Remove the seat belt

Press the red button on the buckle and remove the tongue from the buckle to remove the seat belt.

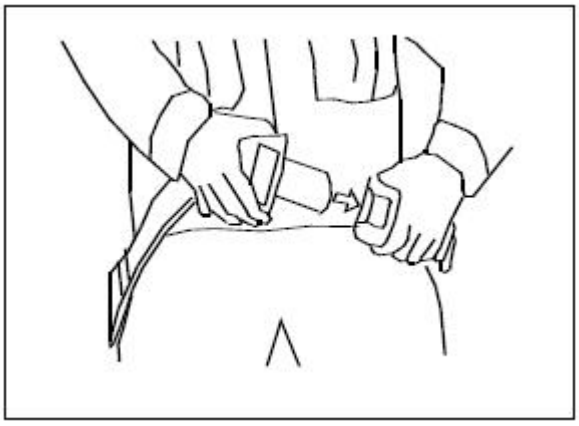

Security lock part

1. Safety lock handle lever

Warning: the security locking system of the working device is an important part of the machine safety system. When the driver leaves the cab, it must be locked safely. If the safety lock handle is not in the locked position, the handle may move, causing the working device or platform to move, which may result in an accident.

Pilot lock

Turn the safety lock handle lever counterclockwise to the vertical position, the general control of the pilot system does not supply oil, and the machine working device, platform rotation and walking, etc. will not work, which plays a role in safety protection.

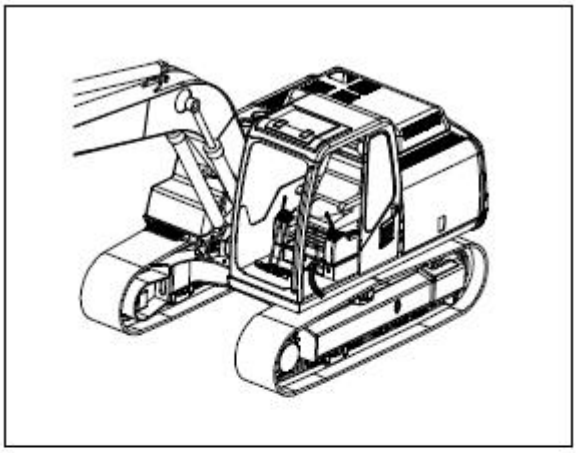

Pilot unlock

Turn the safety lock handle clockwise to the horizontal position to connect the pressure source, and the machine can work normally.

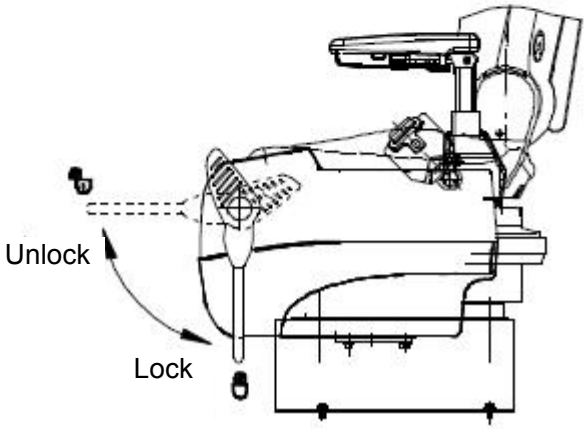

Start switch (at the right control box panel)

1. Gear O

Stop gear, turn off the engine, and turn off the power supply of the whole machine.

2. Gear I

Work gear, turn on the power supply of the whole machine.

3. Gear III

Engine starting gear. Turn to this gear to start the engine. If the gear is not maintained, it will automatically reset to the work gear.
In order to protect the engine starting motor, the single starting time is not allowed to exceed 15 seconds; The interval between two starts must be more than 30 seconds.

Start switch

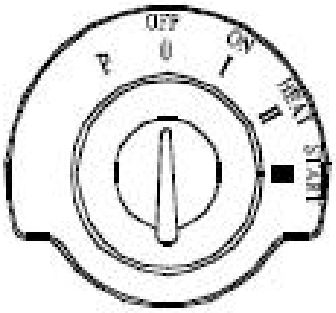

Throttle control (on the right side of cab)

Throttle knob

The throttle knob has 1 ~ 10 gears to select the working speed of the engine. The engine speed increases by turning the throttle knob to the right; the engine speed decreases by turning the throttle knob to the left. Be sure to turn the knob to the left minimum throttle before stopping the engine.

Throttle knob

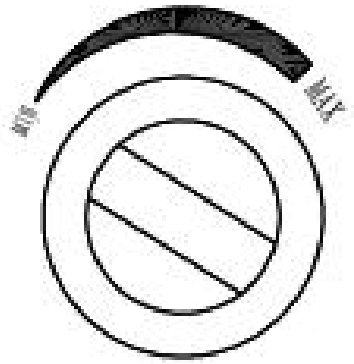

Monitor

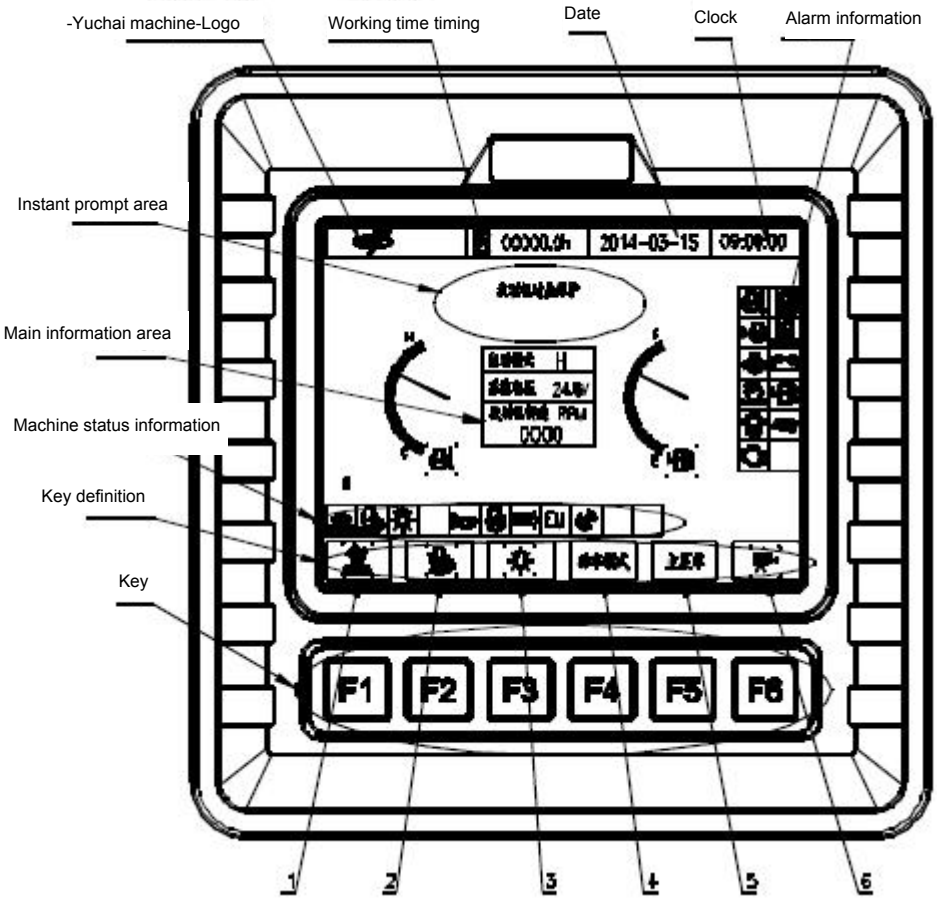

Press the key corresponding to the icon to realize the corresponding function:

1: Walk fast, slow speed selection.

2: Automatic idle speed function selection.

3: Warm-up function selection.

4: Power mode function selection.

5: Enter the main menu.

6: Rear view camera switch (when rearview system is optional).

Main screen and basic operation

1. Main information area

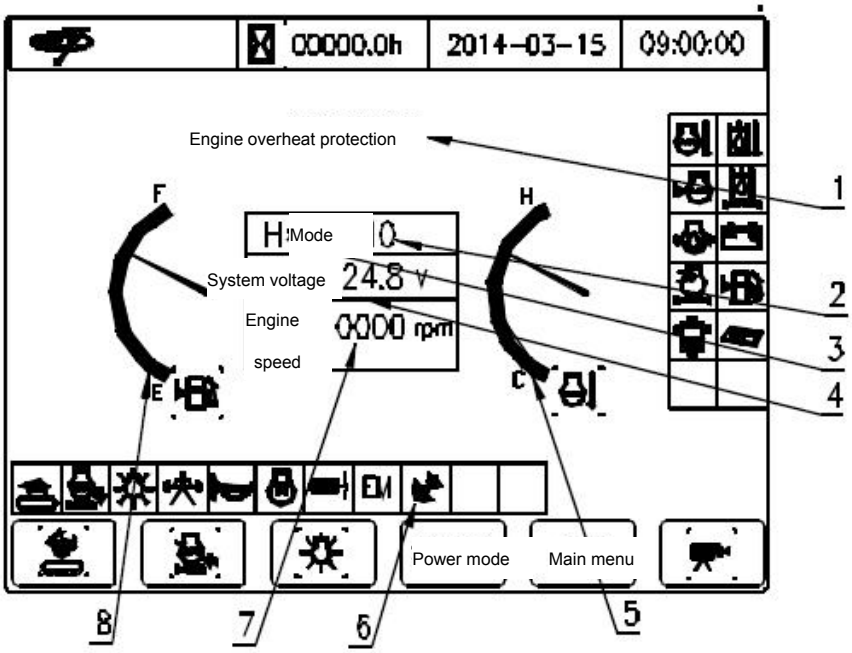

1. Instant message display.
2. Throttle gear. Gear 1 ~ 10.
3. Power mode: S mode (default at startup), H mode, L mode.
4. Current voltage of the system.
5. Engine coolant temperature. The alarm displays in the instrument alarm area when the engine coolant temperature is too high.
6. For machines equipped with GPS, this symbol is displayed after the GPS monitoring function is activated.
7. Engine current speed.
8. Fuel level gauge. The alarm displays in the instrument alarm area when the fuel level is too low.

2. Status information

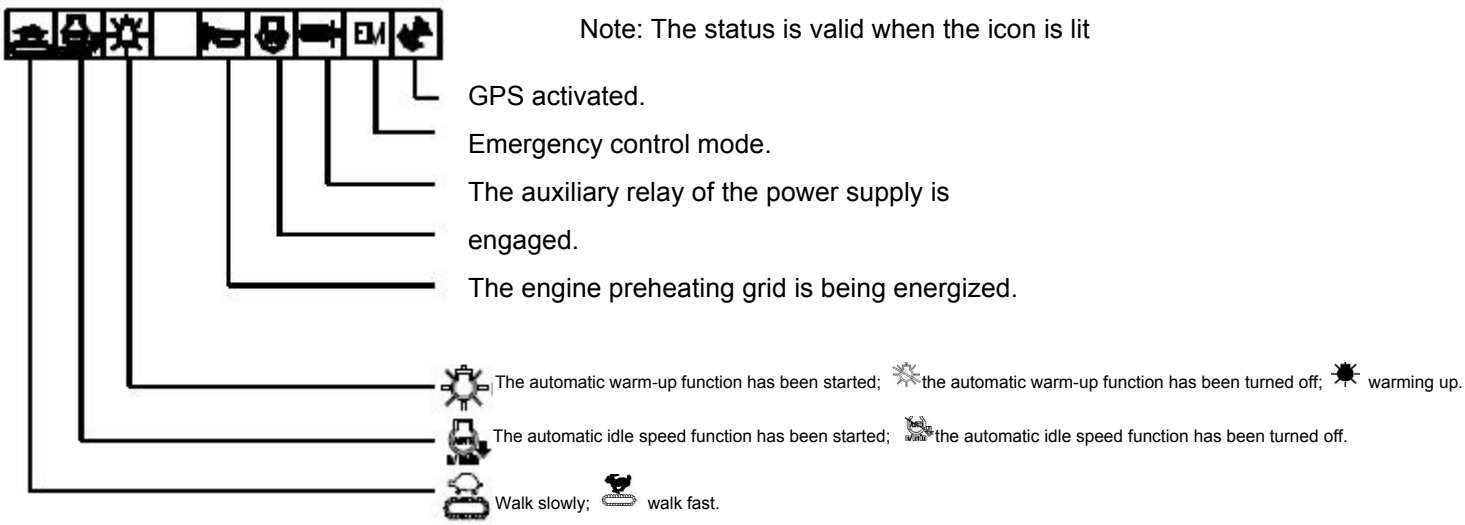

Display item	Icon	Color	The corresponding state when it is on	Switch operation
Walk in fast/slow speed status indication		White	Walk fast	Switch by the corresponding key and keep it.
		White	Walk slow	
Idle speed control mode indication		White	The automatic idle speed function has been selected	Switch by the corresponding key. The system defaults to automatic idle speed mode, and each power on is the default mode.
		White	The non-automatic idle speed control mode has been selected	
Beep indication		Red	The buzzer sounds when Level II alarm is given, and this icon is displayed at the same time	
Preheating status indication		Yellow	The engine preheating relay is being energized.	
Warm-up status indication		White	Automatic engine warm-up mode	Switch by the corresponding key.
		White	Cancel the automatic engine warm-up mode	
		Yellow	The engine is warming up	
Power control indication		Green	The auxiliary relay of the power supply is engaged	
Emergency control mode	EM	Yellow	Switch to the emergency control mode	
GPS mode indicator		Green	The interlocking function between the current GPS and the control system has been activated	

3. Alarm information

Note: The icon is highlighted in case of alarm.
Please stop the machine immediately for inspection and handling in case of alarm, and contact Yuchai Heavy Industry or authorized dealer for handling if necessary.

Icon	Color	Alarm item	Alarm activation conditions	Alarm level	Handling method
	Red	Engine coolant temperature.	Ultra-high limit alarm	1	Downtime for handling
	Red	Engine coolant level	Ultra low limit alarm	1	Downtime for handling
	Red	Engine oil pressure	Ultra low limit alarm	2	Downtime for handling
	Yellow	Engine air filter	It will display after the engine air filter is blocked for 3 minutes	1	Downtime for handling
	Yellow	Oil-water separator	Ultra-high limit alarm	1	Downtime for handling
	Red	Hydraulic oil temperature	Ultra-high limit alarm	1	Downtime for handling
	Yellow	Hydraulic oil return filter	It will display after the hydraulic oil filter is blocked for 9 minutes	1	Downtime for handling
	Red	System voltage	System voltage ≥ upper limit voltage	2	The alarm light is always on when the engine is not started, and the alarm needs to be handled after stopping the machine if the engine is started.
			System voltage ≤ lower limit voltage	1	
	Yellow	Fuel level	Ultra low limit alarm	1	Refueling
	Red	Maintenance tips	Remaining maintenance time of maintenance items ≤ 0 hours	1	Maintain on time
	Yellow	Maintenance tips	Remaining maintenance time of maintenance items <30 hours	1	
	Yellow	Engine alarm	The engine has current diagnostic trouble codes	1	Downtime for handling

4. Structure of main menu

Enter the main menu by pressing 主菜单 from the main page.

Press ▼ or ▲ to make the menu cursor ▷ point to the corresponding menu.

Press ✓ to enter the main menu.

Press ↩ to return to the previous menu.

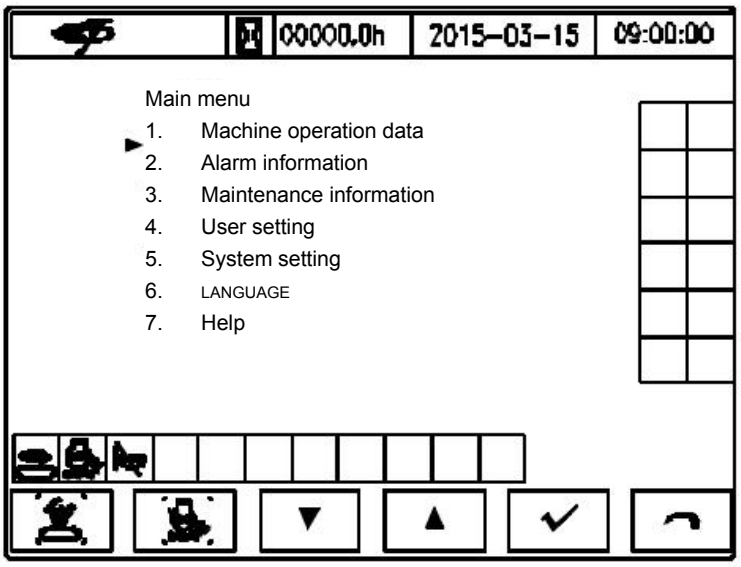

Menu structure chart

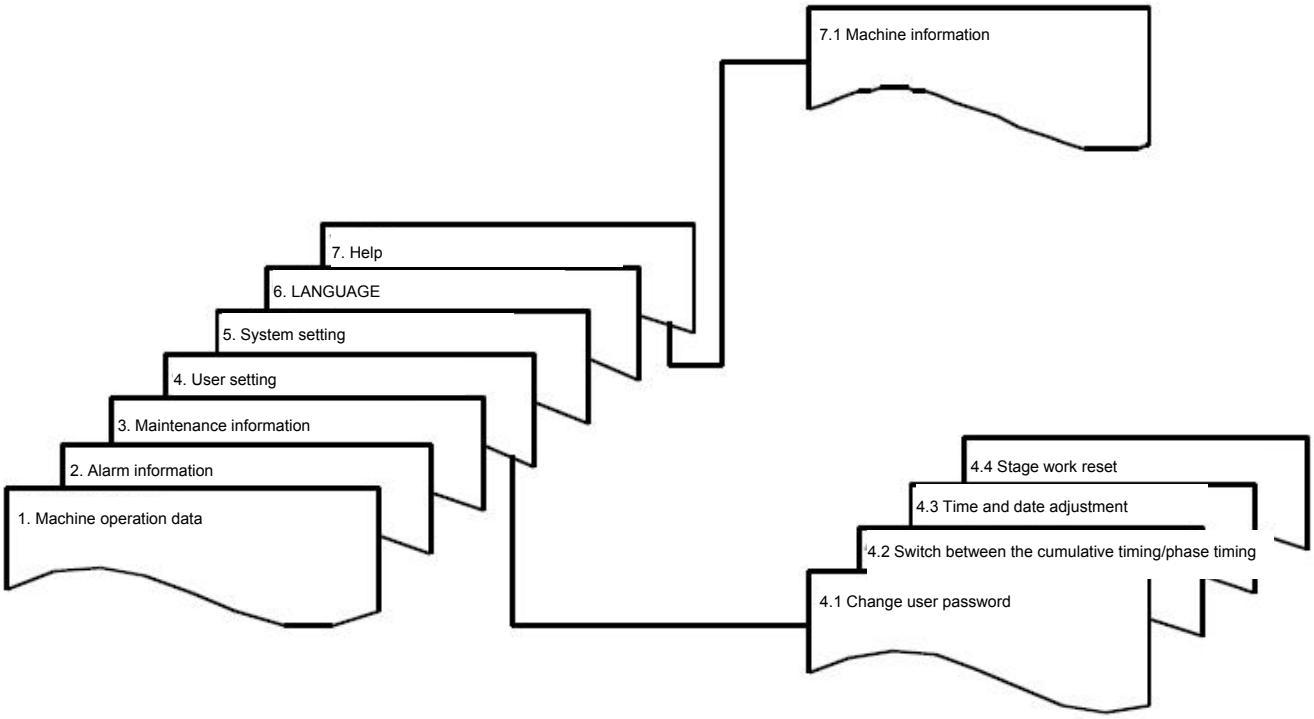

Operating mode description

The machine can select the throttle gear, power mode and other functions. Select the correct working mode, so that the machine can perform its best under different working conditions.

<table>
<tr><th colspan="2">Throttle gear</th><th colspan="2">Power mode</th></tr>
<tr><td rowspan="3">The engine speed from gear 1~10 can be selected at will through the throttle knob</td><td rowspan="3">This work mode allows the operator to select the proper engine speed according to the operating conditions.</td><td>H</td><td>The heavy-duty operation mode can meet the maximum requirements for productivity.</td></tr>
<tr><td>S</td><td>Standard operation mode can realize the optimal matching of fuel consumption and production efficiency.</td></tr>
<tr><td>L</td><td>Light load operation mode focuses on the requirements of precise control.</td></tr>
<tr><td>Automatic idle speed mode</td><td colspan="3">The engine speed will automatically enter the standard idle state when all operations are stopped for 5 seconds. The engine speed will drop to the minimum speed if all operations are stopped for more than 200 seconds. When the operator resumes operation, the machine will automatically return to the working mode before idling. However, the above functions are unavailable if the automatic idle speed mode is cancelled.</td></tr>
<tr><td>Safety mode</td><td colspan="3">After starting the engine, the engine speed is maintained at the lowest speed regardless of the throttle knob position. The engine speed can be adjusted after the throttle knob is rotated or the machine control mode is changed. This mode cannot be cancelled.</td></tr>
</table>

Warning: Please cancel the automatic idle speed mode for safety when the machine is running on the transport vehicle.

Operation of working device and rotation mechanism

1. Operation of excavation equipment and platform rotation mechanism

A. Left pilot handle control

Stick control: the stick extends when pushing forward, and retracts when pulling backward.
Platform rotation: the platform turns right when swinging to the right, and it turns left when swinging to the left.

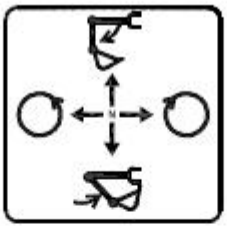

Sketch map for left pilot handle control

B. Right pilot handle control

Boom control: lower the boom when pushing forward, and lift when pulling back.
Bucket control: the bucket turns outwards when swinging to the right, and turning inwards when swinging to the left.

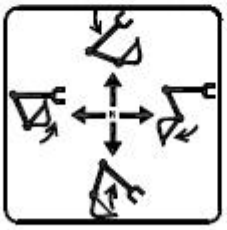

Sketch map for right pilot handle control

In order to ensure the performance and safety of the machine, the pilot handle shall be operated at a constant speed as far as possible, and the sudden speed change is not allowed.

2. Operation of auxiliary working devices (optional)

You can directly operate the pedal of the foot pedal attachment by your foot when operating the auxiliary work device.

1. Walking and walking direction control

Operate the left and right walking joysticks to control the tracks walking on the left and right sides of the machine.

The unilateral control lever can realize the unilateral steering of the machine.

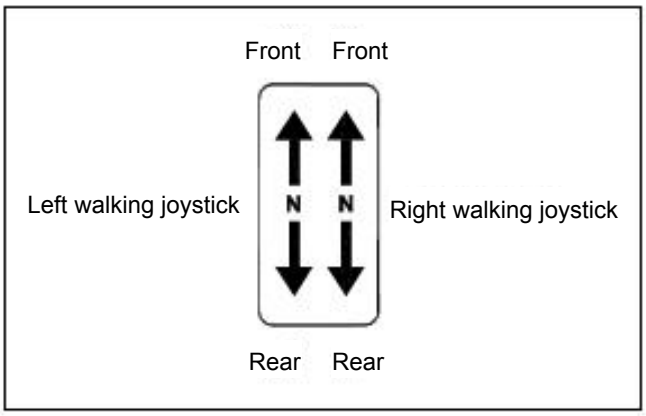

Key control panel (on the right side of cab)

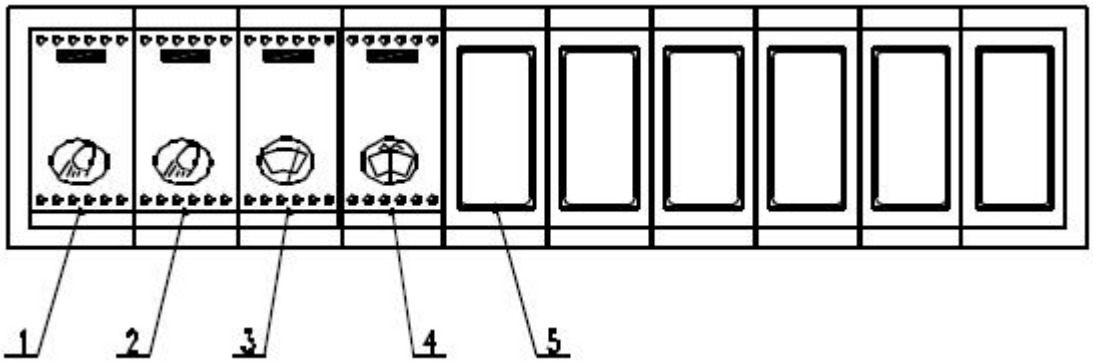

1. Light switch of working device

Press the marked side of the switch to open it, otherwise it is closed.

2. Platform light switch

Press the marked side of the switch to open it, otherwise it is closed.

3. Two-speed wiper switch

Press the marked side of the switch to open it; otherwise it is closed.

I is the stop gear
II is the low speed gear
iii is the high speed gear

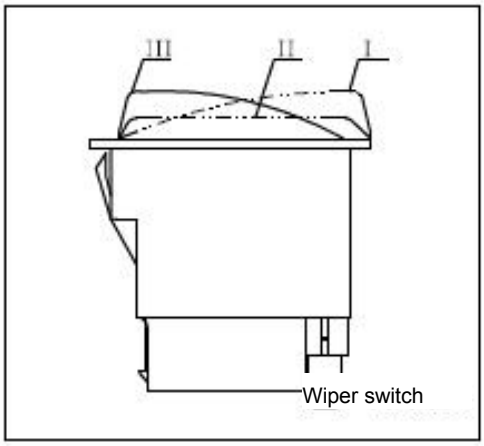

4. Windshield washing switch

Press the marked side of the switch to open it. The water sprayer sprays water to the front window, and then press the wiper switch to clean the front window; Otherwise, it is off.

5. Switch cover

The switch cover only seals the reserved switch position. When it is necessary to add functions, first remove the switch cover, and then add the switch keys.

Air conditioning control

The air conditioning control panel is located on the switch pack of left control box panel.

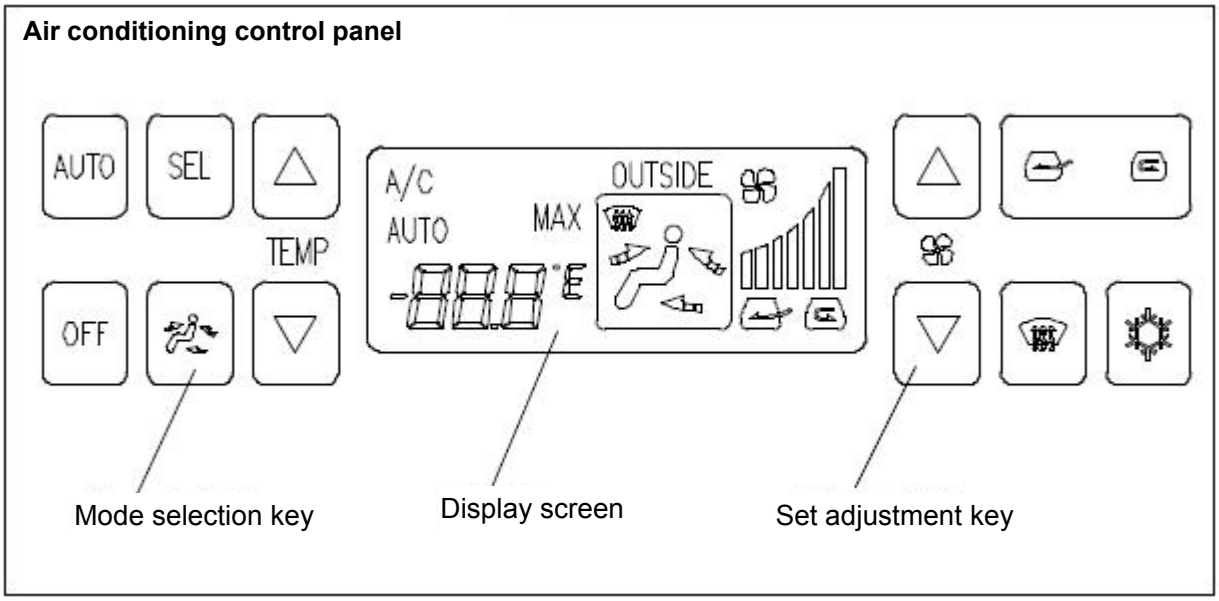

1. Key functions and basic operations

Power switch

The air conditioning system is automatically powered on when the machine is powered on. The air conditioning system enters the automatic cooling mode, the temperature is set to 25℃ by default, the wind speed is 4, and the internal circulation air is used.

Press the "OFF" key, the air conditioning system will be shut down, the current working state will not be memorized, and the power will be turned off.

Cooling key

Press this key in the ventilation mode to memorize the current status (wind speed setting value), and the system will enter the cooling mode. The screen displays A/C (in the upper left corner).

Press this key in the cooling mode to cancel the cooling mode. The graphics disappear on the screen A/C (in the upper left corner), and the system enters the ventilation state.

Press this key and the defrost key in the defrost mode to cancel the defrost mode, and the screen graphics disappear. The system enters the cooling mode and displays A/C (in the upper left corner) graphics.

Press this key in the automatic cooling mode to cancel the automatic cooling mode, the screen AUTO and A/C graphics disappear, and the system enters the ventilation mode.

Defrost/heating key

Press this key in ventilation mode to make the system enter the defrost/heating mode. The screen displays graphics.

Press this key twice in the cooling mode to make the system enter the defrost/heating mode.

Circulation air key

Press this key to enter the internal circulation mode. The screen displays , press this key again in the internal circulation mode, and the system switches to the external circulation mode.

Press this key to enter the external circulation mode. The screen displays , press this key again in the external circulation mode, and the system switches to the internal circulation mode.

Increase setting key

The different temperature can be set by using this key. The screen displays the specific temperature setting value. The temperature increases by 0.5℃ each time you press this key. The maximum limit is 32℃.

Press this key to increase the wind speed, and the bar number of displayed on the screen will increase accordingly. The bar number increases by 1 bar and the wind speed increases by 1 gear each time you press this key.

Decrease setting key

The different temperature can be set by using this key. The screen displays the specific temperature setting value. The temperature decreases by 0.5℃ each time you press this key. The minimum limit is 17℃.

Press this key to decrease the wind speed, and the bar number of displayed on the screen will decrease accordingly. The bar number decreases by 1 bar and the wind speed decreases by 1 gear each time you press this key.

Mode setting key

You can switch between the following four blowing modes by using this key:

Face blowing+back blowing mode, the screen displays , the face blowing vent and back blowing vent open.

Full blowing mode, the screen displays , the face blowing vent, back blowing vent and foot blowing vent open.

Foot blowing mode, the screen displays , the foot blowing vent opens.

Foot blowing+defrosting mode, the screen displays , the foot blowing vent and defrost vent open.

Ambient temperature view key

You can view the ambient temperature by using this key, and the screen displays the specific ambient temperature value.

2. Application of special operations

1) Forced cooling operation

This operation should normally be selected in hot weather, especially in the period before the cold air is turned on. The method: select the cooling mode, press the key "Increase wind speed" to select the maximum wind speed, and press the key "Decrease temperature setting" to select the minimum temperature value.

2) Weak cooling operation

This operation should usually be selected in a slightly hot climate, especially when the indoor temperature has been suitable or even cooler after the cold air has been turned on for a period of time. The method: select the cooling mode, press the key "Decrease wind speed" to select the minimum wind speed, and press the key "Decrease temperature setting" to increase the set temperature value appropriately.

3) Forced heating and defrosting operation

This operation should normally be selected in cold weather, especially in the period before the heating is turned on, and when the frost on the outside of the glass needs to be removed. The method: select the heating mode, press the key "Increase wind speed" to select the maximum wind speed, and press the key "Increase temperature setting" to select the maximum temperature value.

4) Weak heating operation

This operation should usually be selected in a slightly cold climate, especially when the indoor temperature has been suitable or even warmer after the heating has been turned on for a period of time. The method: select the heating mode, press the key "Decrease wind speed" to select the minimum wind speed, and press the key "Decrease temperature setting" to decrease the set temperature value appropriately.

5) Dehumidification and demisting operation

A layer of fog usually forms on the inside of the glass, which affects the vision, in a humid climate (including indoor water vapor exhaled by human body and human sweating), when the indoor temperature is higher than the outdoor temperature (including the use of heating), except that indoor humidity makes people feel uncomfortable. This operation should normally be selected at this time.

There are two ways to do this:

A. Select "weak cooling operation" in a warm or slightly hot climate (see above "4" for details).

B. Select heating and cooling to make them function at the same time in a slightly cold climate (that is, "defrosting mode" in Table 1, and the screen will display graphics).

In this defrost mode, the cooling capacity has been set by using the program, and cannot be adjusted or displayed; The heating capacity can be adjusted by the operator according to the indoor temperature.

3. Other instructions

① The indoor stale air may not be fresh if the internal circulation is used for a long time, but it will cause partial loss of cooling or heating if the external circulation is used for a long time. Therefore, the operator is requested to use it as appropriate.

Machine setting: the system will automatically close the external circulation damper (enter the internal circulation mode) as long as the system operation mode is changed or the machine is shut down. If the operator needs to use the external circulation function after changing the operation mode or just starting the machine, it can only be effective by pressing the external circulation air selection key.

② The air conditioning system configured for this machine is automatic air conditioning. Each time the machine is started, the air conditioning system automatically enters the cooling mode, the temperature is set in the comfort range that the human body can feel, and the air volume is set to level 4. If the automatic control mode is maintained, the air conditioning system can automatically adjust the blowing temperature, blowing direction and air volume to approach the set temperature of the cab. You can change the air volume manually by using the air volume adjustment button when you do not like the air volume controlled automatically.

Radio

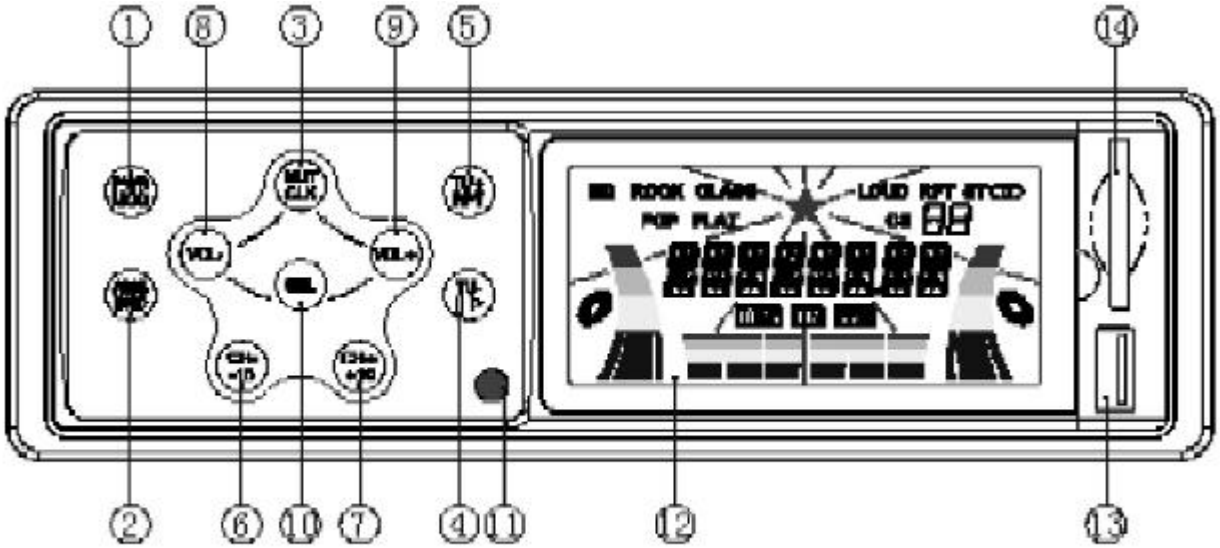

Radio operation instruction

1. PWR/MODE -- the power switch turns the radio on or off, MP3 conversion

When the power of the machine is off, press this key or insert SD/MMC card or USB to turn on the power of the machine.

After startup:

Long press to turn on and off the power supply of the machine.

Short press to switch between radio and MP3 (USB, SD).

2. AMS/BAND -- Automatic search and storage, band switching, display of MP3 information and track search

Radio status:

Short press this key to switch between FM and AM.

Long press this key to automatically search for and store radio stations. (FM and AM can store 31 radio stations respectively)

MP3 status:

Short press to display the information of MP3 songs. (Only western symbols are supported)

Long press to enter the track search mode, use key 8 (VOL -) or key 9 (VOL+) to select the previous/next track, key 6 (CH -) or key 7 (CH+) to select the previous/next ten tracks, key 5 (TU+) or key 4 (TU -) to select the first/last track, and press this key to confirm after selecting the track number.

3. CLK/MUTE -- Mute, time display and adjustment

Radio/MP3 status:

Short press to mute the whole machine.

Long press to display the time. Long press to enter the time adjustment mode when the time is displayed. The minute will flash at this time. The hour will flash if you press again briefly. Then you can decrease or increase the hour or minute by pressing 8 (VOL -) or 9 (VOL+).

4. TU -/-- Manual station adjustment, automatic station search, MP3 music selection, and start or pause playing

Radio status:

Short press to manually adjust the station downward.

Long press to automatically search the station downward.

MP3 status:

Short press to play the previous track.

Long press to start or pause playing MP3 songs.

Use the combination key 2 (AMS/BAND) to search MP3 track.

5. TU+/RPT -- Manual station adjustment, automatic station search, MP3 music selection, and repeat playing

Radio status:
Short press to manually adjust the station upward.
Long press to automatically search the station upward.
MP3 status:
Short press to play the next track.
Long press, it indicates that the single song is played repeatedly if "RPT" is displayed on the display screen 12, all songs are played repeatedly if "RPT" is not be displayed.
Use the combination key 2 (AMS/BAND) to search MP3 track.

6. CH -/- 10 -- Station selection, storage and MP3 track quick selection

Radio status:
Short press to select the last memorized radio station.
Long press to enter the station storage mode. The station number flashes at this time, then short press the key 7 (CH+)/key 6 (CH -) to add or subtract the station number, or long press the key to add or subtract the station number continuously to select the station number to be stored. The frequency will be automatically saved to the selected station number after 3 seconds.
MP3 status:

Subtract 10 from the played track number.

7. CH+/+10 -- Station selection, storage and MP3 track quick selection

Radio status:
Short press to select the next memorized radio station.
Long press to enter the station storage mode. The station number flashes at this time, then short press the key 7 (CH+)/key 6 (CH -) to add or subtract the station number, or long press the key to add or subtract the station number continuously to select the station number to be stored. The frequency will be automatically saved to the selected station number after 3 seconds.
MP3 status:

Add 10 to the played track number.

8. VOL+ -- Increase the volume, function selection setting

Press this key to increase the volume.
Long press to continuously adjust.
Set functions by combining with SEL.
Use the combination key 2 (AMS/BAND) to search MP3 track.

9. VOL- -- Decrease the volume, function selection setting

Press this key to decrease the volume.
Long press to continuously adjust.
Set functions by combining with SEL.
Use the combination key 2 (AMS/BAND) to search MP3 track.

10. SEL -- Function set (by combining with key 8VOL- and key 9VOL+)

Short press to enter the sound effect menu, cycle through VOL → BASS → TRE → BAL, and then adjust the value by using key 8 (VOL -) and key 9 (VOL+).
Long press to enter the system menu, short press the key SEL to cycle through the menus, and then adjust the value by using key 8 (VOL -) and key 9 (VOL+).

11. Remote control window

12. Display screen

13. USB socket -- the machine searches all tracks on the USB flash disk after inserting the USB flash disk and starts to play them.

14. SD/MMC card slot -- the machine searches all tracks on the USB flash disk after inserting the SD/MMC card and starts to play them.

Note: The operation panel will be slightly different due to different radio models.

Door and window

1. Cab door

The excavator door is the only path for the driver to get on or off the machine normally. The door must be locked when the driver leaves the cab.
Please fasten the door lock on the door latch when the cab door is open to avoid hurting others. When it is necessary to close the door, press the door latch lever to open the door latch, and the cab door can rotate.

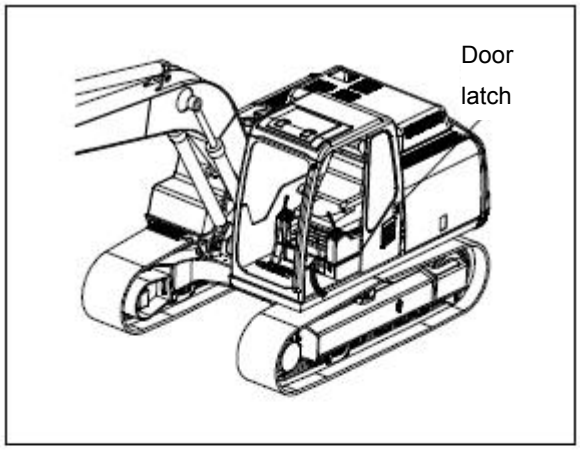

2. Rear window

The rear window can be used as an emergency exit. When the cab door cannot be opened for some reason, someone is trapped in the cab and cannot get on or off normally, and it is necessary to escape from the cab, please smash the glass by aiming the pointed cone of escape hammer to the rear window glass until the glass is broken, and then escape from it.

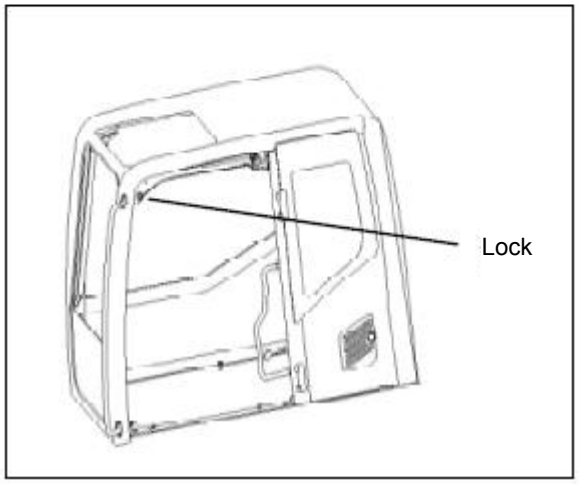

3. Front window (flip window)

The driver can get better observation conditions and air circulation if the flip window is opened.

If you want to open the flip window (front window), you need to open the handle lock on both sides of the flip window at first. By operating the handle of the flip window handle lock, you can slide the flip window up and down. When the flip window is pulled to a proper position, you can push the flip window up to the locked position, and lock the flip window by releasing the handle lock.

Conversely, the flip window can be lowered.

Power switch

1. Manual power switch

Refer to the attached figure for the connection and disconnection of manual power switch.
The switch is in the ON position: the machine is powered on and can operate normally.
The switch is in the OFF position: the machine is powered off.

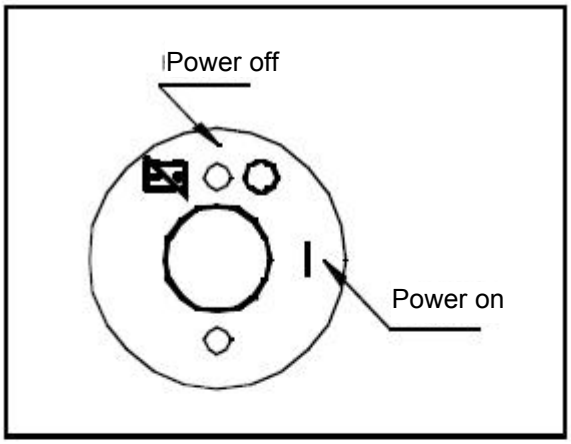

When it is necessary to repair and maintain the machine, please disconnect the manual power switch to ensure personal and machine safety.

When the machine is shut down for a long time, please disconnect the manual power switch to protect the battery and extend the service time of the battery.

2. Circuit breaker

This machine is equipped with a circuit breaker to protect the machine circuit.
The circuit breaker is in the reset state when the machine works normally.
In case of short circuit fault in the machine circuit, the circuit breaker will automatically trip and disconnect the power supply of the whole machine. The circuit fault of the entire machine should be eliminated at this time, the circuit breaker can be reset only after the circuit is confirmed to be normal.

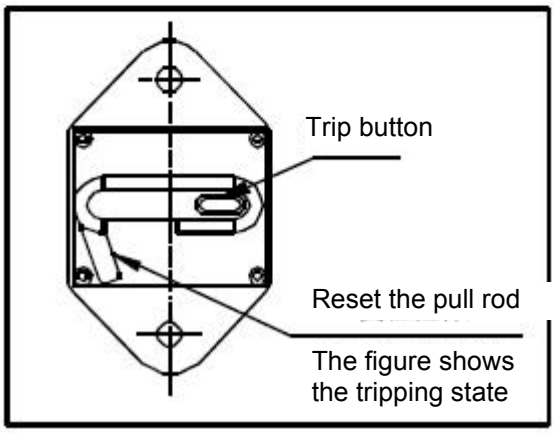

4

Operation guide

Preparation before operating the machine

1) Excavators should be operated by trained drivers and meet the specific requirements for drivers in each region before they can be operated independently.
2) Drivers are strictly forbidden to manipulate before reading the user guide.
3) Drivers must wear tight-fitting and suitable clothing and relevant safety protection equipment adapted to the work before operation, such as safety helmets, leather shoes, gloves, protective glasses, seat belts, etc.
4) Check the machine carefully according to the usage requirements before starting every day.
5) Check whether the working device, oil cylinder, and hose are damaged.
6) Remove dust and dirt around the engine, radiator and battery.
7) Check the hydraulic device, fuel tank, hose, and joints for oil leakage (you can check whether there are obvious oil traces on the parking floor).
8) Check all parts of the lower frame (tracks, drive wheels, guide wheels, etc.) for damage and whether the bolts are loose. There is no looseness in the bolt connection between the frame and the platform.
9) Check that all meters and monitors are not damaged.
10) Clean the rearview mirror, check for damage, and adjust the angle so that you can see the correct field of view.
11) Check that the seat belt is not damaged.
12) Make sure that the correct maintenance has been carried out in accordance with the specified requirements.

⚠ Warning: Before operating the machine, you should ensure that you have understood and memorized the contents of the safe operation of the machine in the "Safety Regulations" of this manual.

Engine operation

⚠	Warning: Before starting the engine, please refer to the safety details in this manual. Read all safety signs on the machine. There must be no other people in the workplace. Before operation, learn and practice safe operation. When operating the machine, you must be clear about and follow the relevant operation and maintenance sections of the manual, and comply with the corresponding laws and regulations.

1. Check before starting the engine

1) Check whether the seat belt is fastened, honking the horn, and confirm whether there are people around the working area and on or under the machine.
2) Check whether each window glass and rearview mirror can provide a good field of vision.
3) Check whether there is dust or dirt around the engine, battery and radiator, and remove if there is any.
4) Check that there are no cracks, excessive wear or play in the working devices, cylinders, connecting rods and hydraulic hoses. If an abnormality is found, it must be replaced and repaired.
5) Check the hydraulic device, hydraulic oil tank, hoses, and joints for oil leakage.
6) Check the lower body (track, sprocket, guide wheel, etc.) for damage, wear, loose bolts, or oil leakage.
7) Check whether the display of the meter is normal, whether the working lights can work normally, and whether there is an open circuit in the electrical circuit.
8) Check whether the coolant level, fuel level, hydraulic oil level, and engine oil level are between the upper and lower limits.
9) In cold weather, it is necessary to check whether the coolant, fuel, hydraulic oil, battery electrolyte, engine oil, and lubricating oil are frozen. If it is frozen, the engine must be defrosted before starting the engine.
10) Check whether the hydraulic safety lock is in the locked state.
11) Check the working condition, direction, and position of the machine in order to provide relevant information for the operation.

2. Start the engine

Warning:

When a warning sign prohibiting engine starting is hung on the joystick, it is not allowed to start the engine.

Before starting the engine, you must confirm that the safety lock handle is in the locked position to prevent accidental contact with the joystick during starting, which may cause sudden movements of the working device and cause an accident.

You should thoroughly preheat the machine when starting the engine in cold weather. If the machine is not thoroughly preheated before operating the joystick, it will be slow to respond, which will lead to accidents.

If the battery electrolyte freezes, do not charge the battery and do not start the engine by using a different power source.
Doing so will cause the battery to catch fire. Before the battery is charged or the engine is started by using a different power source, the battery electrolyte must be dissolved. Before starting, check whether the battery electrolyte is frozen or leaking.

Before starting the engine, insert the key into the start switch and when it is turned to the ON position, check the display status of all the indicator and alarm lights on the digital combination instrument. If there is an alarm, please perform related troubleshooting first before starting the engine.

A. Start the engine at normal temperature

Turn the key to the working position, the alarm indicator will go out, the instrument will display "the engine can be started", indicating that the machine can be started normally. Continue to turn to the START position and keep it at this position for no more than 15 seconds. After the engine starts, release the key and it will automatically return to the working position. If the engine fails to start, it will restart after more than 30 seconds.

B. Start the engine in cold temperature

In cold temperature (the specific temperature is automatically determined by the machine), turn the key to the working position, the instrument displays "engine is being preheated", and the machine automatically enters the preheating state. It is not allowed to continue to turn the key to start the engine at this time. When the engine is automatically preheated and the instrument displays "engine can start", the engine can be started by turning the key to the starting position.

C. Engine warm-up

The controller will make an automatic judgement after the engine is started. If the engine does not meet the warm-up conditions, the engine will run in the lowest gear regardless of where the throttle gear is. The engine will run at the speed set by the gear after the throttle gear is turned or the power mode is set. If the controller judges that the machine meets the warm-up conditions, the engine will automatically warm up in gear 3, and the warm-up time will not exceed 5 minutes.

Note: The continuous starting time should not exceed 15 seconds; the interval between two starts should not be less than 30 seconds; if the engine cannot be started three times in a row, check whether the engine systems are normal.

Warning:

1) Do not turn the key while the engine is running. Because it will damage the engine at this time.
2) When dragging the excavator, do not start the engine.
3) Do not start the engine by short-circuiting the starter motor circuit.

- Start the engine with the auxiliary cable

⚠	Warning: When the battery electrolyte freezes, if (1) you try to charge, or (2) jump-start the engine, the battery will explode. To prevent the battery electrolyte from freezing, keep it fully charged. If you do not follow these instructions, you or others will be harmed.

⚠	**Warning**: The battery generates explosive gas. Keep away from sparks, flames and fireworks. Pay attention to ventilation when charging or using the battery in a confined area, and wear eye shields when working near the battery.

If the method of connecting the auxiliary cable is wrong, the battery may explode. So do it in accordance with the following regulations.

1) When using the auxiliary cable to start, two people should perform the starting operation (one sitting on the operator's seat and the other operating the battery).
2) When starting with another machine, do not let the two machines touch.
3) When connecting the auxiliary cable, turn the key switches of the normal machine and the malfunctioning machine to the OFF position. Otherwise, when the power is turned on, the machine may move.
4) When installing the auxiliary cable, be sure to connect the battery negative (-) last; when removing the auxiliary cable, disconnect the battery negative (-) cable first.
5) When disassembling the auxiliary cable, be careful not to let the auxiliary cable clamps contact each other or the cable clamps to contact the machine.
6) When starting the engine with auxiliary cables, be sure to wear goggles and rubber gloves.
7) When connecting a normal machine with a faulty machine with an auxiliary cable, use a normal machine with the same battery voltage as the faulty machine.

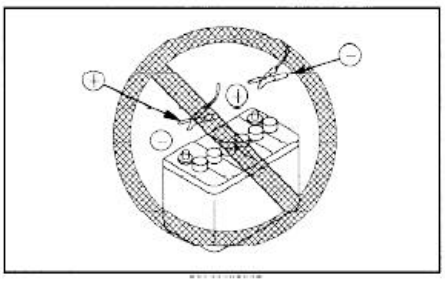

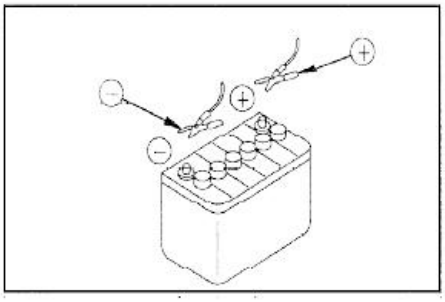

3. After starting the engine

A. Engine warm-up and machine warm-up

The normal working temperature of hydraulic oil is 50°C~80°C. Operating the hydraulic oil below 20°C will damage the hydraulic components. Therefore, if the oil temperature is lower than 20°C before starting work, the following preheating process must be followed.

1) The engine warms up automatically.

2) After the engine is warmed up automatically, put the throttle in the middle position and run for 5~10 min.

3) At this speed, extend and retract each cylinder several times, and gently operate the rotation and travel motors to preheat them. It can only work when the oil temperature reaches above 20°C. When necessary, the bucket cylinder can be extended or retracted to the end of the stroke, and the hydraulic oil can be preheated at full load, but it does not exceed 30 seconds each time. It can be repeated until the oil temperature requirement is reached.

B. Inspection after starting the engine

1) Check whether the indicator lights are off.

2) Check for oil leakage (lubricating oil, fuel oil) and water leakage.

3) Check if there is any abnormality in the sound, vibration, heating, smell, and instrument of the machine. If any abnormality is found, repair it immediately.

4. Turn off the engine

Note: If the engine is suddenly turned off before it cools down, it will greatly shorten the service life of the engine. Therefore, except in emergency situations, do not turn off the engine suddenly.

If the engine is overheated, don't shut it down suddenly, but run at a medium speed to gradually cool the engine, and then shut down the engine.

1) Turn the engine throttle knob to the idle position.

2) Run the engine at a low idle speed for about 5 minutes to allow it to gradually cool down.

3) Turn the key switch to the OFF position and turn off the engine. Each indicator light goes out.

4) Remove the start switch key.

5. Inspection after turning off the engine

1) Patrol and inspect the working device, the outside of the machine, and the chassis and check for water or oil leakage. If an abnormality is found, repair it.

2) Fill the fuel tank with fuel.

3) Check whether there are paper scraps and debris in the engine room. Remove paper scraps and debris to avoid fire.

4) Remove the mud attached to the chassis.

In and out of the machine

1) Make sure to hold the handrail (indicated by the arrow) at the door of the cab as shown in the figure.

2) Ensure that the foot is stepped on the track steadily.

3) When getting on and off the machine, do not use the joystick as a handrail to hold it tightly.

4) Before getting on and off the machine, you must confirm whether there are any substances such as mud and grease on the surface of the handrails and tracks that can cause slippage. If there are, please clean them up.

5) Don't jump on or off the machine, and don't go up and down the machine when the machine is in motion.

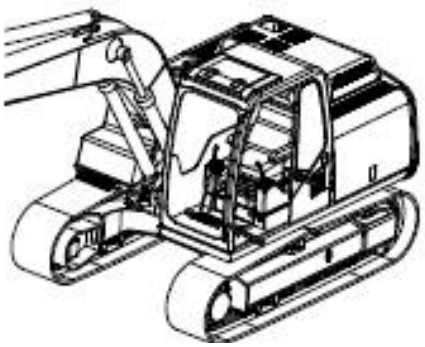

Handrail for getting on and off

6) Before leaving the machine, the working device must be completely lowered to the ground, and then the safety lock lever must be turned to the lock position to lock the whole machine, shut down the engine, and keep this state until the next operation of the machine.

Note: Please take out the key and lock all doors and windows when leaving.

It is not allowed to climb to the top of the engine hood and cab.

No one is allowed on the working devices (such as bucket, stick, boom and accessories) under any state.

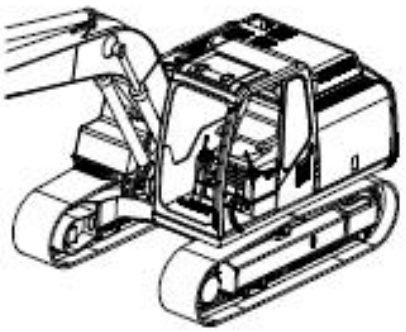

Pull up the safety lock handle lever

Movement of the machine

1. Safety principles for moving machines

1) Before starting the excavator, you should be familiar with the surrounding environment of the site, whether there are pedestrians, obstacles, and ground-bearing capacity.
2) Sound the horn before starting the excavator to warn others to pay attention.
3) Drivers are strictly prohibited from standing on the ground to start and operate the machine.
4) The excavator must walk and work on solid ground with a width greater than 1.5 times.
5) When walking through underground passages, bridges, or under high-voltage power lines, be sure to have gesture commands.
6) When walking, the boom and stick must be lowered to maintain the best position of the center of gravity.
7) When walking, only the driver is allowed to drive the machine and no others are allowed.
8) The platform may not be locked when the machine travels on the flat road for a long distance, but it must be locked when going uphill or downhill.
9) Before operating the steering joystick, check the direction of the crawler frame.
10) Don't let anyone in the area around the machine.
11) Remove all obstacles on the walking route of the machine.
12) There is a blind area at the rear of the machine. Pay special attention to ensure safety when reversing or turning.

Warning: It is dangerous to change the joystick suddenly when walking at high speed.
1) Don't change the joystick suddenly, otherwise, it will cause a sudden start.
2) Avoid suddenly changing the joystick from forward to backward (or from backward to forward).
3) Avoid sudden changing of the joystick, such as a sudden stop from high speed (release the joystick).

2. Preparation for moving the machine

1) Turn the safety lock lever to the unlocked position.

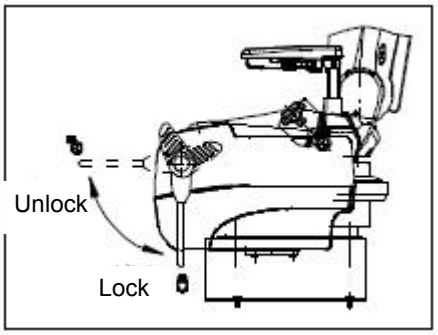

2) Turn the throttle handle to the high-speed position to increase the engine speed.

3. Move the machine forward

1) Turn the safety lock lever to the unlock position, raise the working device and lift it off the ground in 40-50 cm.

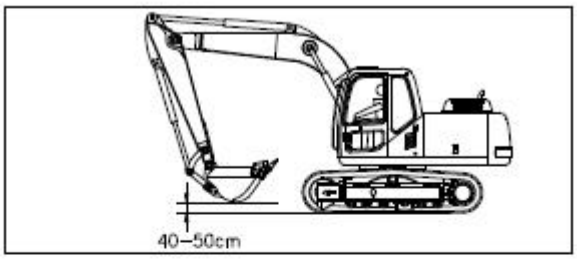

2) Operate the left and right walking joysticks according to the following steps.
When the forward sign is in front:
Slowly push the front of the joystick forward to make the machine walk forwards.

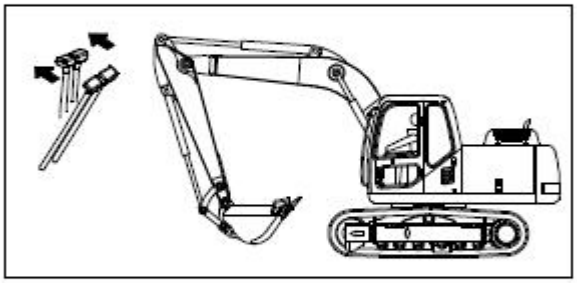

When the forward sign is at the rear of the machine:
Slowly pull the joystick backward in order to move the machine forward.

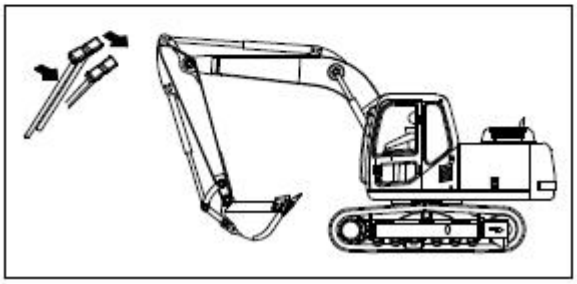

Note: When the machine is at a low temperature, if the walking speed of the machine is not normal, the machine must be warmed up thoroughly. In addition, if the lower car body is blocked by mud and the machine travels at an abnormal speed, the dirt and mud on the lower car body must be removed.

4. Move the machine backward

1) Turn the safety lock lever to the unlock position, raise the working device and lift it off the ground in 40-50 cm.
2) The operation is the reverse of the forward operation.

5. Stop the machine

Put the left and right joysticks in the middle position to stop the machine.

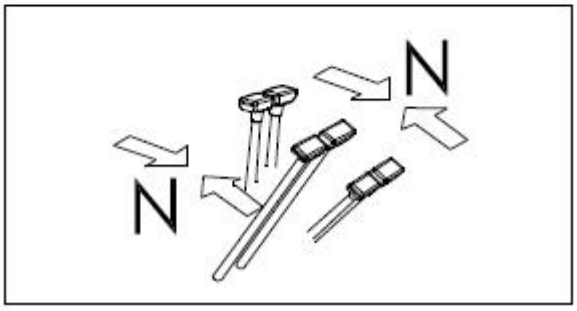

Note: Avoid sudden stops when the machine is walking, and there must be enough space when parking.

Steering of the machine

Note: Before operating the walking joystick, check the position of the bulldozer shovel. If the bulldozer shovel is behind, the operation of the walking joystick is reversed.

Use the left and right walking joysticks to change the driving direction.
Avoid sudden changes in direction as much as possible. Especially when turning in the opposite direction (turning in place), stop the machine before turning.

1. Turn when the machine stops

When turning left (as shown in the right figure):
When walking forward, push the right walking joystick forward and the machine will turn left.
When walking backward, pull the right walking joystick back to turn the machine to the left.

When turning right:
Operate the left walking joystick in the same way.

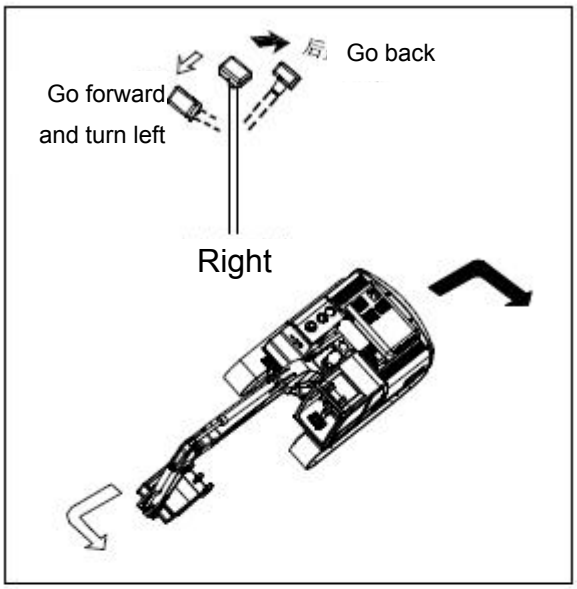

Turn in place

When making a left turn on the spot, pull the left walking joystick back and push the right walking joystick forward.

When making a right turn on the spot, pull the right walking joystick back and push the left walking joystick forward.

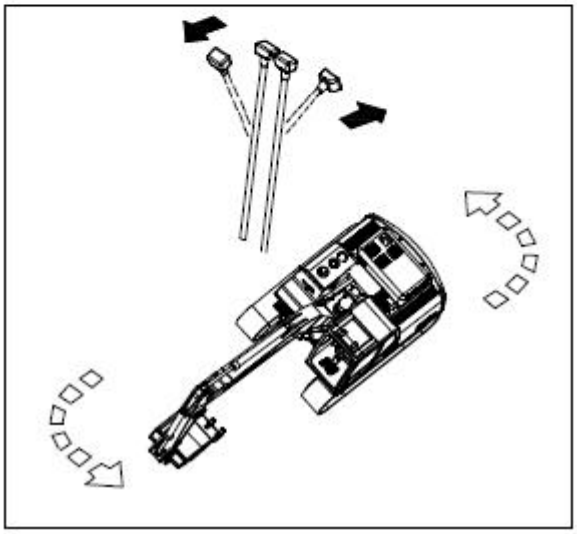

Rotation of the machine

- Before turning the upper structure, check whether the surrounding area is safe.
- If you operate the rotation joystick quickly, the upper structure will rotate quickly; if you operate the rotation joystick slowly, the upper structure will rotate slowly. Pay attention to the operating speed of the joystick.

Operate the left working device joystick to rotate.

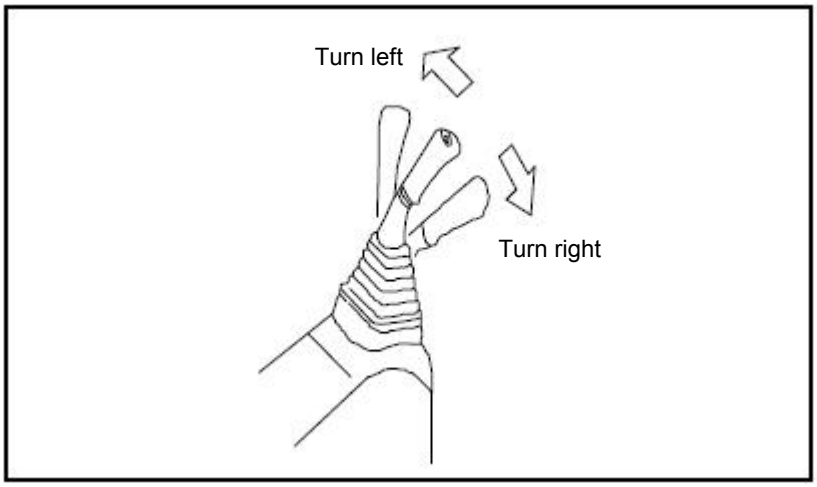

Operation of working device

If you operate the working device joystick quickly, the working device will move quickly; if you operate the working device joystick slowly, the working device will move slowly.

The working device is operated by the left and right pilot valves. The left pilot valve operates the stick and swing. The right working device joystick operates the boom and bucket.

When the joystick is released, it will automatically return to the neutral position and the working device will remain in the original position.

If the pilot valve is operated within 15 seconds after turning off the engine, the working device can also be dropped to the ground.

In addition, you can also operate the pilot valve to release the remaining pressure in the hydraulic oil circuit and lower the boom after the machine is mounted on the trailer.

1. Stick control

Operate the left pilot valve, the stick extends when pushing the pilot valve forward, and the stick retracts when pulling the pilot valve backward.

Left working device joystick

2. Rotation control

Operate the left pilot valve, the platform will turn left when it is tilted to the left, and the platform will turn right when it is tilted to the right.

3. Boom control

Operate the right pilot valve, lower the boom when pushing the pilot valve forward, and raise it when pulling the pilot valve backward.

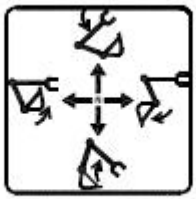

Right working device joystick

4. Bucket control

Operate the right pilot valve, the bucket will turn outward when it is tilted to the right, and retract when it is tilted to the left.

Note: There may be a pause during the operation of the stick. This phenomenon is not a mechanical failure but a normal phenomenon of the excavator. During the stick operation, the self-weight speeds up the action of the stick, which may cause insufficient fuel supply.

Work on slopes or water

Warning: Construction near the slopes of the foothills is extremely dangerous. Rain, muddy ground, snow-covered ground, icy ground, loose sand, and soft ground, and other different working conditions bring potential dangers to operational safety. Therefore, when constructing in dangerous areas such as the foothills or slopes, you should correctly judge whether it is safe to operate in order to make a decision.

● When walking, raise the bucket about 20-30 cm from the ground.
● Do not walk backwards and downhill.
● When walking on bumps or other obstacles, keep the working device close to the ground and walk slowly.
● Do not turn on slopes or cross slopes. You can go to a flat place in advance to get better.
● When working on a slope, turning or operating working devices will cause the machine to lose balance and tip over, so avoid this kind of operation. When the bucket is loaded, it is very dangerous to turn downhill.
If this operation is necessary, a platform must be piled up on the slope with soil so that the machine can be balanced during operation.
● Do not go up or down steep slopes, otherwise, the machine may tip over.
● When walking uphill, if the track shoe slips or cannot go uphill only by the force of the track, do not use the pulling force of the stick to help the machine go uphill. This will cause the machine to tip over.
● When going uphill, ensure that the engine and hydraulic oil have been properly preheated, otherwise it will cause an accident.

Allowable water depth

Do not drive the machine in water or mud that is deeper than the center line of the supporting wheel.

Add butter to parts that have been immersed in water for a long time until the used butter is completely squeezed out.

Remove the soil or debris from the place where you get off in time, otherwise the parts may be damaged.

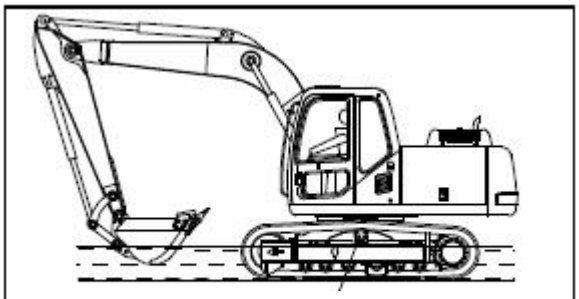

The supporting wheel

Get out of the muddy environment

Always be careful to avoid getting into the mud. If the machine is stuck in the mud, follow the below steps to drive the machine out.

A. Track on one side is trapped

Note: When lifting the machine with a boom or stick, make sure that the bottom of the bucket is in contact with the ground (do not use bucket teeth to push).
The angle between the boom and the stick should be 90 degrees to 110 degrees.

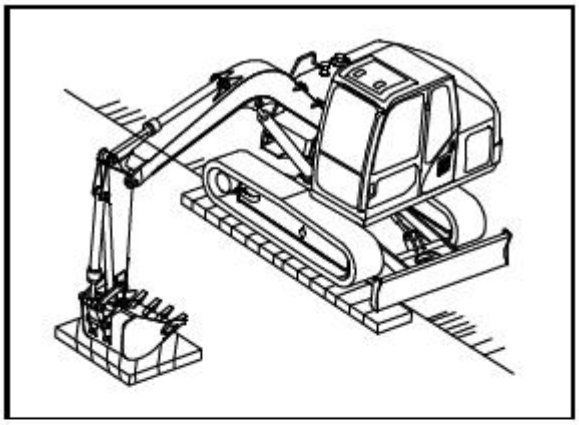

When only one track is stuck in the mud, use a bucket to lift the track, and then pad wooden boards or logs to drive the machine out.

B. Tracks on both sides are trapped

If the tracks on both sides are stuck in the mud, and can't move if it slips. Use the method provided above to pad wooden boards or logs.
Dig the bucket into the ground in front, operate the stick in the same way as digging, and adjust the walking lever to the forward position to pull out the machine.

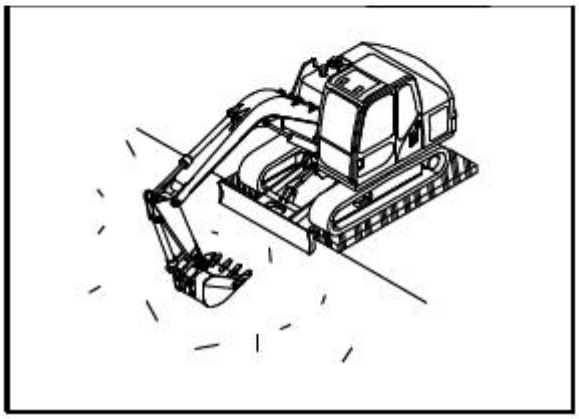

1. Backhoe operation

The backhoe is suitable for digging below the machine.

When the machine is in the state shown in the figure on the right, that is, when the bucket cylinder and the connecting rod, and the stick cylinder and the stick are at 90°, the maximum pushing force of the bucket can be obtained.

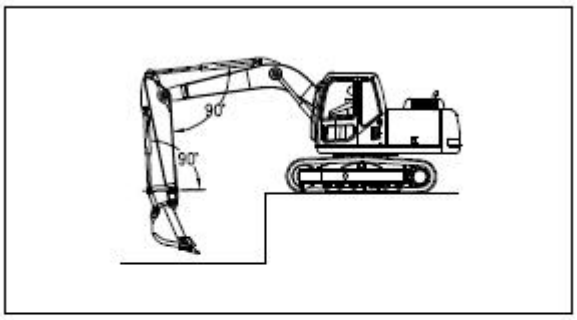

Effective use of this angle when digging can optimize work efficiency.

The digging range of the stick is from a 45° angle away from the machine to a 30° angle toward the machine.

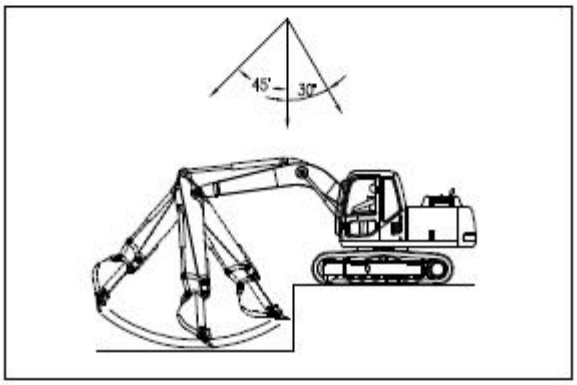

There may be some differences depending on the digging depth, but try to operate within the above range instead of operating the cylinder to the end of its stroke.

Note: It is best to dig hard rocky ground after breaking it by other methods. This will not only reduce the damage to the machine but also be more economical.

2. Loading operation

In places where the rotation angle is small, the dump truck can be parked in a place where the operator can easily see it so that the operation can be carried out more effectively.

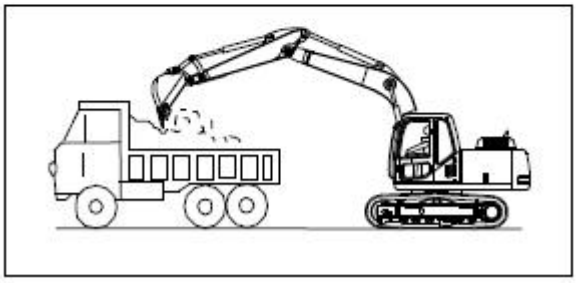

If loading from the rear of the dump truck is more convenient than loading from the side of the dump truck, the loading capacity is larger.

3. Trenching operations

Extend the boom and stick, and insert the bucket teeth into the soil.

Use the stick cylinder to excavate. During the excavation process, adjust the cutting angle and loading angle of the bucket in a timely manner, or use the bucket cylinder to excavate.
Do not insert the bucket teeth too deep into the soil when digging, so as not to dig the soil due to overload of the hydraulic system. In the case of unmovable soil excavation, the boom can be raised appropriately, and the situation will change.
After digging a full bucket, raise the boom and stick to make the bucket higher than the ground, and turn the platform to a proper position to unload the soil.

Note:
1) Do not touch the aerial wires.
2) After clarifying the conditions of the underground pipelines and cables, start excavating to avoid damage to the pipelines and electric shock accidents.
3) In the event of an electric shock, the driver should not leave the seat and warn others not to approach. Drive the machine to a safe area, cut off the power, and then leave.

4. Shake off the sand and soil in the bucket

Keep the stick in an approximately horizontal state and the bucket in the unloading position. If the sand and soil still cannot fall, manipulate the bucket joystick left and right for several times to shake out the bucket. Avoid using the bucket cylinder stroke to shake off the sand and soil by impact vibration at the end.

5. Precautions for the use of related parts

A. Precautions for the use of tracks

1) Excessive debris entering the tracks will increase the working strength of the tracks and cause damage.
2) Avoid making a sudden turn on a road with a strong friction.
3) Try to avoid getting saltwater or salty gas, as salt will corrode the track.
4) If the track will not be used for a long time, keep it in a cool and dry place.
5) When one track and the front device are jacked up, the other track cannot be used for walking, which will cause wear.
6) When walking, the track cannot be slack, otherwise, the track may fall off or be damaged.

Removal and installation of bucket

Safety principle

● When hitting the pin with a hammer, metal shavings may fly into the eyes and cause serious injury. When performing this operation, always wear goggles, helmets, gloves, and other protective equipment.
● When unloading the bucket, place the bucket steadily.
● If you hit the pin hard, the pin may fly out and injure people in the surrounding area. Therefore, before hitting the pin, make sure that the surrounding area is safe.
● When disassembling the pin, pay special attention not to stand under the bucket, and do not put your feet or any part of your body under the bucket.
● When removing or installing the pin, be careful not to hurt your hands.
● When aligning the hole, do not put your fingers in the pin.

Installation

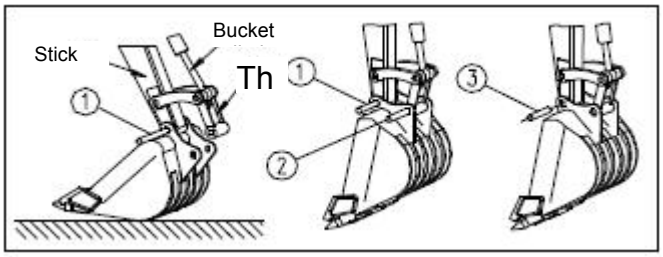

Park the machine on a solid, level ground. When making connections, for safety's sake, clarify the signals with each other and work carefully.

Put the excavator in working condition, manipulate the stick while facing the bucket, until the holes of the stick and the bucket are aligned, and insert a Φ30mm steel rod ① into the hole.

Lift the boom and stick to make the bucket hang vertically on the stick.

Operate the stick cylinder to align the hole of the connecting rod with the connecting hole of the bucket. Install the shaft ②, take out the steel rod ① and install the shaft ③.

Disassemble

Park the machine on a solid, level ground. The bucket is required to be placed just in contact with the ground. It will increase the resistance if you drop the bucket heavily on the ground, and it will be difficult to remove the pin.

Remove the double nuts from the locking bolts of each pin of the stick and connecting rod, remove the bolts, then remove the stick pin ③ and the connecting rod pin ② and remove the bucket.

Safety principle

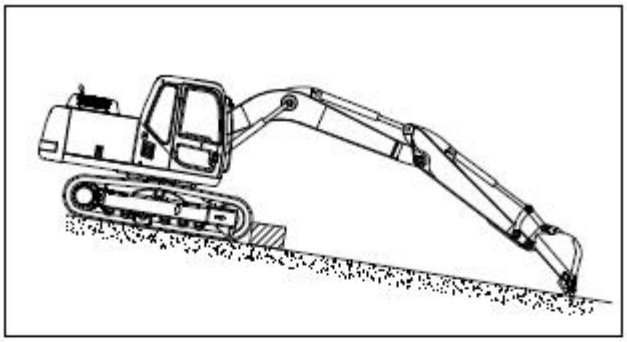

1) Avoid sudden parking. When parking the machine, leave as much space as possible.
2) Park the machine on a solid, level ground. Avoid parking the machine on slopes. If it is necessary to park the machine on a slope, put a block under the track and insert the working device into the ground to prevent the machine from moving.
3) If you accidentally touch the joystick of the working device, the working device or machine will suddenly move, causing serious personal injury or accident. So, before getting up from the seat, be sure to put the safety lock control lever firmly in the lock position.

Park the machine

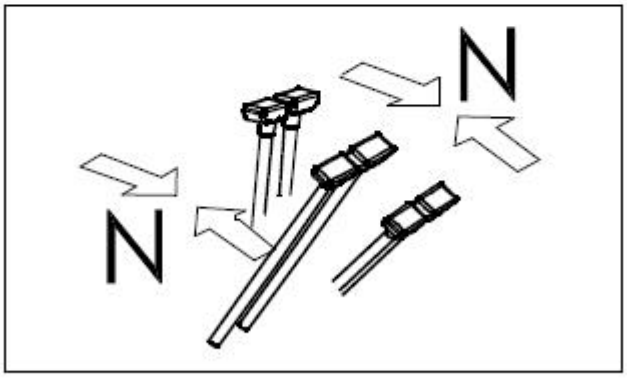

1) Put the left and right walking joysticks in the middle position. Stop the machine.

2) When the engine is working under heavy load, don't stop it immediately, let it run at low speed for 5 minutes, and stop it after removing the overheating.

3) The bucket and bulldozer shovel drop to the ground.

4) Push the throttle to the end, and pull the parking handle back to the end (if fitted).

5) Turn the start key to the "0FF" position (all indicators are off).

6) Turn the pilot safety handle to the lock position.

After operation

1. Check

Check the engine water temperature, hydraulic oil temperature, oil pressure, fuel level, etc. on the machine's digital monitor.

2. Lock

The following parts must be locked.

1) Cab door (don't forget to close the window and flip window). In any case, if you want to open the flip window, you need to open the handle lock on both sides of the flip window at first. By operating the handle of the flip window handle lock, you can slide the flip window up and down. When the flip window is pulled to a proper position, you can push the flip window up to the locked position, and lock the flip window by releasing the handle lock. Conversely, the flip window can be lowered.

2) Fuel tank filler port

3) Hydraulic oil tank filler port

4) Battery box cover.

5) Engine hood

Note: When opening the engine hood, no one can stand behind the engine hood, be careful of hurting the human body when the engine hood pops up.

Loading, unloading and transportation of machines

1. Safety rules for the shipment of the machine

1) Run the engine at a low speed, and operate the machine slowly when loading/unloading.
2) Do not load/unload the machine during automatic warm-up operation.
3) If the automatic warm-up operation is cancelled during the loading/unloading operation, the speed will suddenly change.
4) When loading/unloading the machine, choose a solid and level ground. Keep a safe distance from the edge of the road.
5) To use a ramp with sufficient width, length, thickness and strength, the width of the slab is equal to 1.2 to 1.5 times of the track width. In order to avoid any accidents, it is recommended that the loading/unloading slope should be less than 15°, or the length of the slope should be greater than 3.5 times of the height. When using a mound slope, the mound shall be completely compacted and measures shall be taken to prevent the slope from collapsing.
6) In order to prevent the machine from slipping on the ramp, remove all the mud and dirt on the track before starting. Make sure that the surface of the ramp is clean and free of water, snow, ice, grease or oil.
7) Do not correct the steering on the ramp, otherwise, the machine may tip over. If you must turn, you should drive off the ramp, correct the direction, and then enter the ramp.
8) Do not use the working devices for loading and unloading operations, this is dangerous.
9) When on a ramp, do not operate any joysticks other than the walking joystick.
10) At the junction between the ramp and the transport vehicle, the center of gravity of the machine will suddenly change, and there is a danger of the machine losing its balance. Therefore, walk slowly when crossing this area.
11) When turning the upper structure on a transport vehicle, the transport vehicle is unstable. Therefore, retract the working device and rotate slowly.
12) Whether getting on or off, the wheels of the transport vehicle should be wedged.
13) Use wooden wedges to keep the excavator in a fixed position on the transport vehicle during transportation. Tie the excavator to the transport vehicle with a rope.
14) Before the driver leaves his seat after completing the work or ending the maneuvering. Raise the safety lock handle first, so that the pilot control oil circuit is disconnected, in order to prevent the machine from malfunctioning due to mistakes or accidental hitting of the joystick.
15) Before going up and down the ramp, be sure to put down the positioning handle of the rotary platform to prevent the platform from rotation.

2. Loading

1) The machine can only be loaded on solid and level ground, and a certain safe distance should be kept from the edge of the road.

2) Appropriately apply brakes to the transport vehicle, and put a pad under the tire to ensure that the transport vehicle does not move.

3) Install a ramp between the transport vehicle and the machine, and ensure that the ramps on both sides are on the same level. The slope of the ramp does not exceed 15 degrees at most. Adjust the distance between the ramps to match the center of the track.

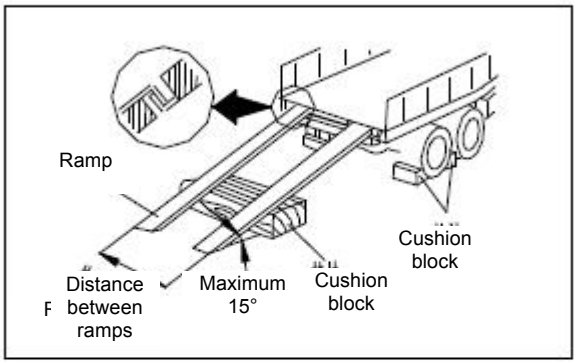

4) Align the excavator with the slab ramp. For safety, after the excavator is close to the ramp, slowly climb up the slope until the end of the ramp.

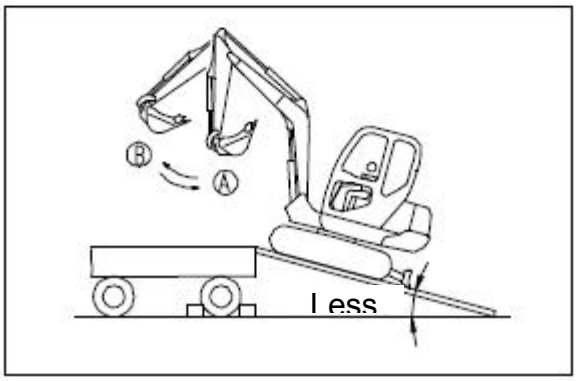

Note: When on a ramp, you can only operate the walking joystick, do not operate any other joysticks or pedals.

5) Stop driving and extend the stick (position B in the figure), so that the front part of the excavator track is tilted down to the bottom plate of the transport vehicle. Be careful not to let the working device touch the body of the transport vehicle when the machine is tilted down. Continue to drive the machine to the location specified by the transport vehicle.

6) Put down the stick, drop the bucket on the floor, and park the machine at the specified position on the transport vehicle.

⚠	Warning: After finishing the work or finishing the operation, before leaving the seat, the driver turns the safety lock handle to the lock position, so that the pilot control oil circuit is cut off, in order to avoid the machine error due to mistakes or accidental hitting of the joystick.

Note: Please select a transport vehicle that matches the weight and size provided in this manual.

3. Fix the machine on the transport vehicle

1) Set up the working device.
2) Turn off the engine and remove the key from the start switch.
3) Turn the safety lock handle to the lock position. Engine hood.
All doors and windows

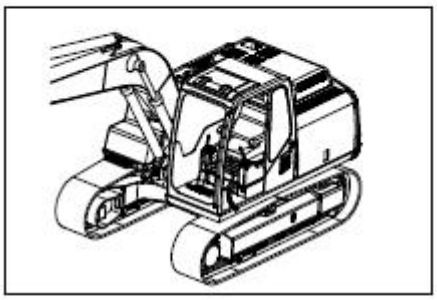

5) Put cushion blocks under the two ends of the tracks to prevent the machine from moving during transportation, and tie the machine firmly with a steel wire rope. Pay special attention to fixing the machine firmly so that it cannot slide to one side.

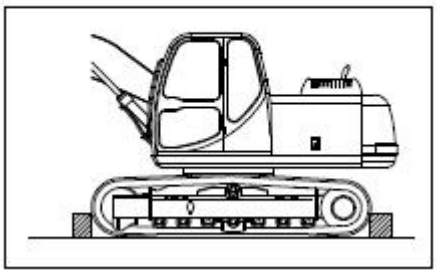

4. Unload the machine from the transport vehicle

1) It can be loaded and unloaded on solid and level ground, and keep a safe distance from the edge of the road.
2) The transport vehicle is braked, and a pad is placed under the tire to ensure that the vehicle does not move.
3) Install a ramp between the transport vehicle and the machine. Make sure that the ramps on both sides are on the same level. Make the slope of the ramp is no more than 15 degrees.
Adjust the distance between the ramps to match the center of the track.
4) Remove the wire rope that secures the machine.
5) Start the engine. In winter, the warm-up operation should be carried out thoroughly.
6) Turn the safety lock handle to the unlock position.
7) Lift the stick and bucket.
8) Check that there are no obstacles in the excavator's range of activity.
9) Make the platform rotate 180 degrees, the excavating device faces the slope, and the excavator is in the forward direction.
10) The excavator advances slowly until the top of the slab, and the stick is extended to make the excavator track tilt down onto the ramp, and then slowly advance to the ground.

5. Hoisting the machine

A. Safety precautions

1) Do not hoist the machine when there are people on the machine.
2) Ensure that the steel wire rope used for hoisting the machine has sufficient strength to bear the weight of the machine.
3) Except for the postures provided in the following procedures, do not hoist the machine in any posture, otherwise, the machine will lose its balance.
4) Do not lift the machine when the upper structure is turned to the side. Before hoisting, turn the working device to one end of the sprocket and make the lower track parallel to the upper structure.
5) When raising, keep the machine level.
6) When hoisting the machine, it is dangerous to walk under the machine. Do not walk around under the machine.

B. Hoisting procedures - for machines with standard technical specifications

Note: The hoisting procedure is applicable to machines with standard technical specifications. According to the accessories and options actually installed, the hoisting method will be different due to different dimensions, weight, center of gravity distribution, etc.

When hoisting the machine, make operations on the flat ground by following the below steps.
1) Turn the upper structure so that the working device is at one end of the sprocket.

2) Fully extend the stick cylinder, and then use the boom cylinder to drop the working device to the ground, as shown on the right.

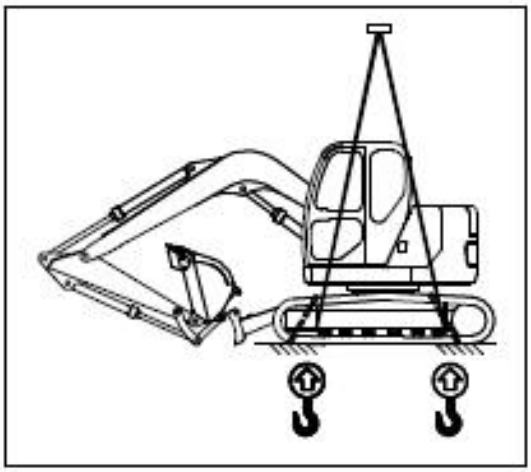

3) Turn off the engine, make sure there is nothing around the cab, and then leave the machine. Close the cab doors and windows.

4) Put a wire rope between the guide wheel and the track thrust wheel from the front, and between the drive wheel and the track thrust wheel from the back. It is also possible to thread the wire rope from under the tracks.

5) Adjust the lifting angle of the wire rope to 30° to 40°, and then slowly hoist the machine.

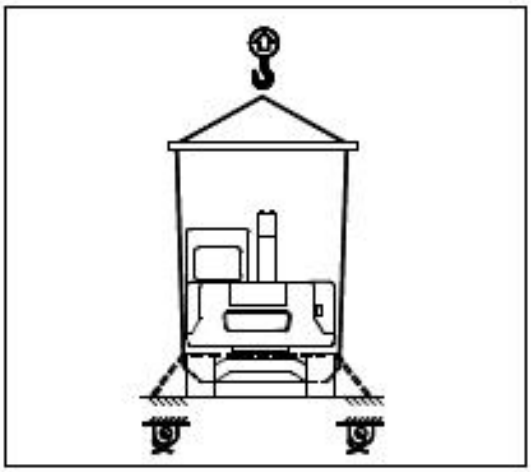

6) After the machine leaves the ground, carefully check whether the machine is balanced, and then slowly hoist it.

Working in cold/hot climates

1. Work in a cold climate

Cold weather will cause special problems. At this time, you must pay special attention to protection to prevent serious damage to the machine. Maintenance in cold weather will extend the life of the machine.

1) Electrical system: Keep the battery clean and fully charged. Check the battery cables and connectors, clean the connectors, and apply a layer of grease to prevent corrosion.
2) Lubricant: Use lubricating oil of appropriate viscosity at each joint. Please use the oil recommended for this machine.
3) Fuel system: Whether the fuel supply is compatible with the cold climate at that time. Use the low-viscosity fuel.

Check the moisture in the fuel system. Cold weather will concentrate water in the fuel tank. Check the water in the fuel filter every 50 hours of operation. If no moisture appears, the inspection period can be extended. If there is moisture, check the fuel tank.

4) Cooling system: Before operating the machine in a cold climate, check the coolant and adjust the appropriate mixing ratio. Use antifreeze suitable for ambient temperature conditions.
5) Working device: Before operating the machine, put on a low gear, start the machine slowly, then stop the machine and operate the working device for about 10 minutes, or do not operate until all hydraulic cylinders are considered to be working properly.

2. Work in a hot climate

To prevent damage to the machine, please do as follows:

1) Ensure that the amount of coolant in the radiator is normal.
2) Before the hot season begins, check the radiator and replace the coolant if necessary.
3) Remove all dirt and scale on the surface of the radiator and engine.
4) Check the fan rotation belt.
5) Use lubricating oil with suitable viscosity.
6) Use proper proportion of coolant in the cooling system.
7) When working in an extremely poor environment such as large dust, always check the air filter.

Storage of the machine

1. Preparation before storage

When storing the machine for a long time, follow the below steps.

1) Clean and rinse all parts, and then put the machine in the room. If you have to store the machine outdoors, choose a flat ground and cover the machine with a cover cloth.
2) Apply a thin layer of grease to the metal surface of the piston rod. Lubricate all lubrication points.
3) Remove the battery, and then store it in a dry and non-freezing place after adding the liquid and charging it.
4) The engine oil is discharged in a hot state and filled with anti-corrosion engine oil. The anti-corrosion engine oil used is MIL-L-21260 for piston engines. Use grade 1 or 2 SAE10W for winter storage and grade SAE30 for summer storage.
5) Add 4 to 6% of the same type of anti-corrosion engine oil in the fuel, and mix the two together well. In order to prevent the generation of condensed water, the fuel tank must be refilled with this mixed fuel.
6) Check the antifreeze performance of the coolant, and use the method of adding antifreeze to make its antifreeze power at least -20℃. If the coolant does not contain an anti-corrosion agent due to the weather, you should add an anti-corrosion agent (for example, according to MIL-G4339C, it should contain a 5% anti-corrosion agent).
7) Start the engine and let it rotate for more than 15 minutes. Different speeds can be used but no load. It should also run when draining lubricating oil from hydraulic components and reducer, and then replaced with new oil for storage.
8) Close the air inlet of the air filter and the outlet of the exhaust pipe. For this, it is recommended to use plastic thick paper and adhesive tape.
9) Lock the platform, raise the safety lock handle (raise the left control box), so that the joysticks and pedals are in a locked state.
10) Put the shut-off valve used to install accessories on the machine to the locked position. Install a plug on the elbow.
11) Keep the machine clean and store it in a dry place.

Note: When storing the machine, adjust the machine to the posture shown in the figure on the right to protect the piston rod of the cylinder and prevent the piston rod from rusting.

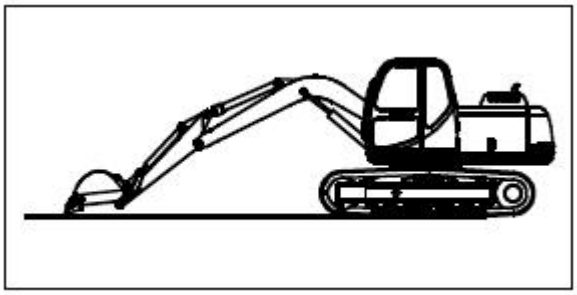

2. During storage

1) During storage, operate the machine once a month so that a new oil film is attached to the surface of the moving parts. At the same time, the battery must be charged.
2) For machines equipped with air-conditioning, the air-conditioning must be operated.
3) Rotate the track.

⚠	Warning: When the machine is indoors, if it is necessary to perform anti-rust operations, open doors and windows to promote air circulation to prevent gas poisoning.

3. Return to use after storage

When using the machine after long-term storage, follow the below steps before using it.
1) Wipe off the grease coated on the surface of the piston rod of the cylinder.
2) Fill all parts with engine oil and grease.
3) When the machine is stored for a long time, the moisture in the atmosphere will enter the oil. Before or after starting the engine, check the oil in all parts. If there is water in the oil, replace all the oil.

Note: 1) Under normal climatic conditions, the storage method described above can store the excavator for one year. However, after 6 months of storage, the parts should be rotated for 15 minutes without loading. At the same time, add lubricating oil to each part.
2) Before the excavator that has been stored for a long time is put into use again, the necessary work and various inspections should be done. After the excavator has been stored for one year, the oil in the reducer and hydraulic circuit must be drained and renewed.

Causes of technical failures and solutions

Fault	Reason	Solution
1. The engine cannot start or is difficult to start	• There is a problem with the starter motor	• Replace or overhaul the starter motor
	• Insufficient battery charge	• Charge or replace with a new battery
	• Improper use of preheating circuit or glow plug	• Repair or replace the glow plug
	• Incorrect injection timing	• Check the injection timing
	• Oil pipeline is blocked	• Clean oil circuit
	• The fuel filter is blocked	• Clean or replace the fuel filter
	• The fuel system has water, dust or air	• Discharge air and clean oil circuit
	• Dirty nozzle or low injection pressure	• Go to the local repair point for repairs
	• Failure of fuel injection pump	• Consult the company's agent
	• Insufficient fuel	• Refill the fuel
	• The intake and exhaust systems are blocked	• Unblocked intake and exhaust systems
2. The engine knocks, runs irregularly or shuts down	• Large blow-by gas	• Consult the company's agent
	• The fuel filter is blocked	• Clean the filter
	• There is dirt or air in the fuel system	• Discharge air and clean oil circuit
	• Oil filter is blocked, nozzle is dirty or faulty	• Go to the local repair point for repairs
	• Damaged high pressure oil pipe	• Replace the high pressure oil pipe
	• Insufficient fuel	• Refill the fuel
	• The governor connection cannot be adjusted	• Consult the company's agent
	• Failure of fuel injection pump	• Consult the company's agent
	• Incorrect fuel injection timing or fuel injection nozzle stuck	• Check fuel injection timing and fuel nozzle
3. Engine power drops	• The fuel is mixed with air	• Discharge air
	• The oil supply is not smooth	• Check and clean
	• Injection timing changes	• Adjust according to the specified value
	• The injector is not working well	• Check the working pressure and atomization of fuel injection
	• Air filter is blocked	• Clean the filter element.
	• Wrong intake and exhaust valve clearance or valve is not sealed	• Adjust valve clearance
	• Cylinder gasket is broken and leaking	• Replace the cylinder gasket
	• Poor operation of fuel injection pump	• Consult the company's agent
	• The engine is overheated	• Check whether the coolant used is correct. Whether the water pump and belt are too loose, repair or replace if there are any, and remove the obstruction of the water channel

Fault	Reason	Solution
4. The engine is overheated	• The coolant level is too low	• Add coolant
	• Temperature sensor failure	• Replace with a new sensor
	• Air filter is blocked	• Clean the air filter
	• The fan belt is loose or out of order	• Re-tighten or replace
	• There is dirt in the cooling system channel	• Cleaning channel
	• Inferior oil or too much oil	• Replace the oil
5. The oil pressure is too low	• The oil level is too low	• Refill the fuel
	• The fuel filter is blocked	• Clean oil filter
	• Pipeline leakage	• Tighten or replace
	• The engine cooling water temperature is too high	• Prepare the mixing ratio of the coolant correctly or consult the local company's agent
6. The engine emits gray and black smoke	• Poor fuel quality	• Use the correct fuel
	• Air filter is blocked	• Replace the filter element
	• Incorrect injection timing	• Adjust according to the specified value
	• Poor nozzle atomization	• Inspect and replace parts
7. The engine emits white smoke	• Poor fuel quality	• Use the correct fuel
	• Excessive engine oil	• Restore the recommended oil level
	• Incorrect injection timing	• Adjust according to the specified value
	• There is water in the cylinder and in the fuel	• Check and change fuel
8. The battery cannot be charged	• The connection is loose or rusty	• Clean or tighten
	• The generator belt is loose or faulty	• Tighten or replace
	• The generator does not charge	• Consult the company's agent
	• Battery electrolyte failure	• Replace battery
	• Battery electrode plate failure	• Replace battery
9. The starter does not work or rotates slowly	• The connection is loose or rusty	• Clean or tighten
	• Insufficient battery charge	• Replace
	• The line is damaged	• Consult the company's agent
10. The engine is running and the generator warning light is on	• Generator failure	• Consult the company's agent
	• Electronic regulator failure	• Replace
	• The line is faulty	• Overhaul
11. The hydraulic system components move too slowly	• Hydraulic oil cooling	• Manipulation action heats up
	• The pilot system pressure is too low	• Consult the company's agent
	• Wrong use of hydraulic oil	• Use the correct hydraulic oil
	• The engine speed is too slow	• Consult the company's agent

Fault	Reason	Solution
12. Hydraulic oil temperature is high	• Wrong use of hydraulic oil	• Use the correct hydraulic oil
	• Oil path blocked	• Consult the company's agent
	• Hydraulic oil filter is blocked	• Clean or replace
	• Oil pump wear	• Consult the company's agent
	• Oil cooler blocked	• Clean oil cooler
	• Oil cooler failure	• Consult the company's agent
	• The pressure for the main safety valve or the relief valve of rotary system is too high	• Consult the company's agent
	• The oil is too dirty	• Oil change
	• Sensor failure	• Replace
13. The hydraulic oil is emulsified or has foam	• The pipeline leaks from the fuel tank to the fuel pump	• Overhaul and tighten
	• Wrong use of hydraulic oil	• Use the correct hydraulic oil
	• Hydraulic oil contains water	• Oil change
	• The oil level is too low	• Calibration of oil level
14. The oil pressure is too low or there is no pressure	• The hydraulic pump is damaged	• Consult the company's agent
	• Insufficient oil in the system	• Refill the fuel
	• Safety valve failure	• Consult the company's agent
15. All parts can't work	• The hydraulic pump is damaged	• Consult the company's agent
A. The oil pump makes noise	• Lack of hydraulic oil	• Refill the fuel
	• Air leakage in the suction pipe	• Repair or replace
B. The noise of the oil pump remains unchanged	• The auxiliary pump is damaged	• Replace
	• The hydraulic safety control device does not work	• Inspection and repair
16. The cylinders or motors are weak or not working	• The hydraulic pump is damaged	• Consult the company's agent
	• Main safety valve pressure becomes lower	• Re-adjust the pressure
	• Low oil pressure and oil level	• Refill the fuel
	• Oil suction filter is blocked	• Clean the oil filter
	• Oil seal is damaged	• Repair or replace
	• Damaged piston rod causes oil leakage	• Repair or replace
	• Pilot valve failure	• Replace
	• The pilot pipe is broken or leaking oil	• Repair or replace
17. Two walking devices do not work	• Central rotary joint oil flushing	• Consult the company's agent
18. A walking device does not work	• The walking device is damaged	• Consult the company's agent
	• The control mechanism is damaged	• Overhaul

Fault	Reason	Solution
19. Abnormal walking	• The track is too tight or too loose	• Re-adjust
	• Oil pump performance is reduced	• Consult the company's agent
	• Crawler frame deformation	• Repair or replace
	• There are gravel or rocks in the track chain	• Removal and repair
	• Control valve leakage	• Consult the company's agent
	• Motor performance is reduced	• Consult the company's agent
20. Abnormal rotation	• Oil pump performance is reduced	• Consult the company's agent
	• Rotary motor is damaged	• Consult the company's agent
	• The pilot valve does not work	• Consult the company's agent
21. Rotation is not continuous	• Rotary gear wear	• Consult the company's agent
	• Rotary support or ball is damaged	• Consult the company's agent
	• Lack of grease	• Consult the company's agent
	• Control valve leakage	• Consult the company's agent
22. Air conditioning system noise	• The electrical connector is loose, causing abnormal noise of the clutch	• Insert the connector tightly or repair it accordingly
	• Belt loose	• Tighten appropriately, replace if damaged
	• Blower blades are loose	• Reassemble tightly
	• The blower is not working properly	• Repair or replace
	• The electronic fan is not working properly	• Repair or replace
	• The compressor bearing is damaged	• Replace
	• The tensioner bearing is damaged	• Replace
23. The air conditioner is not cooling	• Electrical circuit failure	• Repair or replace
	• Air conditioner switch failure	• Repair or replace
	• No refrigerant	• Leak detection, repair, and refrigerant charge
	• System blockage	• Clean or replace
	• Belt loose or broken	• Adjust or replace
	• Expansion valve failure	• Clean or replace
	• The compressor operates abnormally	• Repair or replace
	• Pressure switch failure	• Replace
24. Sometimes there is no cold air	• Poor line contact	• Overhaul
	• Belt loose	• Adjust the belt appropriately
	• Improper adjustment of air conditioner switch cooling	• Re-adjust
	• The system contains too much water and the internal ice is blocked	• Replace the drying bottle
	• The electronic fan or its relay is damaged	• Repair or replace

Fault	Reason	Solution
25. No display on the instrument	• The fuse of the start switch burnt out.	• Replace the fuse with the same specification
	• The start switch is damaged, the wiring is wrong, or the connector is loose.	• Replace the switch; check the circuit and tighten the connector
	• The main power switch is faulty.	• Replace the main switch, check the circuit and tighten the connector
	• Battery wiring fault	• Check the installation of the battery wiring and eliminate the off-line and other phenomena
	• Battery body fault	• Check the electric eye of the battery, charge or replace the battery if it shows in red
	• The instrument fuse burnt out	• Replace the fuse with the same specification
	• Instrument body fault	• Check the instrument wiring and eliminate the poor contact; Replace with a new instrument
26. The engine cannot start	• The start switch is damaged, the wiring is wrong, or the connector is loose.	• Replace the switch; check the circuit and tighten the connector • Replace the fuse with the same specification
	• The fuse of the starter motor burnt out • The start relay is damaged	• Check the relay connector and eliminate poor contact; replace the start relay.
Starter does not rotate	• Poor contact of starter wiring	• Clean and tighten contacts
	• Insufficient battery charge	• Charge or replace the battery
	• There is an open circuit in the starter motor	• Repair or replace the starter motor
Weak starting for the starter motor	• Poor contact of start switch	• Repair or replace the start switch
	• Poor contact at the main wire end of the motor	• Clean and tighten the electrical contacts
	• The wiring end of electromagnetic switch is loose	• Tighten the electrical contacts
	• Insufficient battery charge	• Charge the battery
27. No preheating	• The start switch is damaged, the wiring is wrong, or the connector is loose.	• Replace the switch; check the circuit and tighten the connector
	• The fuse for preheating burnt out	• Replace the fuse with the same specification
	• The relay for preheating is damaged	• Check the relay connector and eliminate poor contact; replace the start relay.
	• Insufficient battery power	• Replace with a new battery or charge the old battery
28. The instrument does not work properly	• The instrument panel displays abnormally	• Replace it with a new instrument if the LCD panel is broken;
	• The instrument key is abnormal	• Replace it with a new instrument if the key is damaged.
	• The instrument speed value displays abnormally	• Replace the instrument if it is broken; • The speed sensor is damaged, or the wiring is poor, please check the wiring. • Check whether the number of flywheel teeth set by the instrument is correct.
	• The oil level value on the instrument displays abnormally	• Replace the instrument if it is broken; • The oil level sensor is damaged, or the wiring is poor, please check the wiring.

Fault	Reason	Solution
	• The hydraulic oil temperature on the instrument displays abnormally	• Replace the instrument if it is broken; the oil temperature sensor is damaged or the wiring is poor, please check the wiring.
	• The water temperature value on the instrument displays abnormally	• Replace the instrument if it is broken; the water temperature sensor is damaged or the wiring is poor, please check the wiring.
	• The oil pressure value on the instrument displays abnormally	• Replace the instrument if it is broken; the oil pressure sensor is damaged or the wiring is poor, please check the wiring.
	• Abnormal alarm function of air filter and oil filter	• Replace the instrument if it is broken; the sensors of air filter and oil filter are damaged, or the wiring is poor, please check the wiring.
29. Other electrical appliances do not work properly	• The electric fan does not work	• Replace the electric fan if it is broken; check the fan connector and eliminate poor contact; replace the switch if the fan switch is broken;
	• The work lamp does not work	• Replace it with a bulb of the same specification if the work light bulb is broken; check the work light connector and eliminate poor contact; replace the switch if the work light switch is broken;
	• The electric horn does not work	• Replace it with a horn of the same specification if the electric horn is broken; check the electric horn connector and eliminate poor contact; replace the switch if the electric horn button switch is broken.
	• The cab dome lamp does not work	• Replace it with a bulb of the same specification if the dome lamp bulb is broken; Check the dome lamp connector and eliminate poor contact; replace the dome lamp assembly if the dome lamp switch is broken.
	• The radio does not work properly	• Replace it with a new one if the radio is broken; check whether the radio antenna is in good condition and whether the wiring is normal; check whether the power plug connector is in good contact. • The horn wiring is poor, please check the wiring.
	• The wiper does not work properly	• Replace it with a wiper of the same specification if the wiper is broken; check the wiper connector and eliminate poor contact; replace the switch if the wiper switch is broken;

5

Maintenance

Common sense for maintenance

New machine running in

The first 100 hours of the machine is the running-in period. Be careful to use during this period, and do not allow the machine to do some work that is overloaded or work-intensive. And only 80% of the work load shall be allowed for 50 hours before the running-in period. The quality of use during the running-in period affects the service life of the machine.

After the first 50 hours of work, the machine shall be inspected and maintained for the first time in accordance with the inspection and maintenance table. At the same time, the pollution degree of the hydraulic oil shall be checked, and its value cannot be greater than NAS9. Otherwise, replace with new hydraulic oil.

If the hydraulic system does not work, the engine cannot be operated at high speed. Only if the temperature of the hydraulic oil exceeds 20 degrees Celsius, the working device can be operated.

Construction in a dusty site

During working in a dusty workplace, follow the below steps:

- It is necessary to frequently check the air filter for blockage with the air filter blockage sensor.
- Clean the radiator core frequently to avoid clogging.
- Frequently clean and replace the fuel filter element.
- Clean the electrical components, especially the starter motor and alternator to avoid accumulation of dust.
- During checking or replacing the oil, move the machine to a dust-free place to prevent dust from entering the oil.

Oil and filter element

Please use clean engine oil and grease, and prevent impurities from entering the engine oil container.

After replacing the oil or the filter element, check the waste oil and filter element for metal chips or impurities. If a large amount of metal chips or impurities are found, report it to the person in charge of the machine and take appropriate measures.

Do not mix oils of different grades. If oil of a different grade is required to be filled, drain the old oil and replace it with oil of a new grade.

Maintenance hours

Pay attention to the working hours indicated on the instrument panel, and carry out the corresponding maintenance according to the maintenance hours.

Use original accessories

The use of original Yuchai accessories is an important factor in ensuring the normal operation of the machine and prolonging the service life of the machine.

Waste disposal

Promote environmental protection and pay special attention to methods of waste disposal:

● Put the oil discharged from the machine into a container. Do not discharge the oil directly onto the ground, or pour it into sewers, drains, rivers, oceans or lakes.

● During handling of hazardous materials, such as oil, fuel, coolant, antifreeze, plastic accessories, solvents, filter elements, batteries and other hazardous materials, the relevant environmental protection laws and regulations shall be followed.

Prevent articles from falling into the machine

● During inspection when opening the fuel tank nozzle, be careful not to drop bolts, nuts, washers or tools inside the machine. If these articles fall into the machine, this will cause damage and malfunction of the machine, and may lead to accidents. If something falls into the machine, take it out immediately.

● Before and after the inspection, check the tools and parts you carried to make sure that nothing has fallen into the machine.

Regular inspection and maintenance

Regular inspection and maintenance shall be carried out in accordance with the items listed in the "Regular Inspection and Maintenance Table", which is an important prerequisite for ensuring the normal operation of the machine and prolonging its service life. Be sure to observe the inspection and maintenance cycle.

Recheck after inspection and maintenance

If recheck is not carried out after each inspection and maintenance, unexpected failures may occur, resulting in serious injury or damage. Pay attention to check
the following:

● Are there any other parts that shall be inspected and maintained?

● Whether all inspection and maintenance items have been carried out correctly.

● Check whether any tools or parts have fallen into the machine. It is very dangerous if any parts fall into the machine and jam into the linkage mechanism.

● Check around the machine to check if there is water or oil leakage and all bolts have been tightened.

Maintenance summary

Lubricating oil

● Use oil that meets the grade and temperature given in the "Oil Selection Table" in this manual. In due time, the oil shall be replaced even if the oil is not dirty.
● Take care to prevent impurities (water, metal particles, dust, etc.) from entering the lubricating oil. Most of the problems of the machine are caused by the ingress of impurities.
● Do not mix lubricating oils of different grades.
● Fill the oil according to the specified amount. Too much oil or too little oil can cause malfunctions.
● During replacing the oil, be sure to replace the relevant filter element, especially during replacing the oil filter element, charge fresh and clean engine oil that meets the requirements into the new filter element before installation.

Fuel oil

● During storing or filling fuel, take special care not to let impurities enter.
● Be sure to use the fuel specified in the "Fuel Selection Table" in this manual. The fuel shall be selected according to the ambient temperature, otherwise it will easily solidify at low temperatures (especially below -15°C (5°F)). Therefore, it shall be replaced with the fuel applicable to the ambient temperature.
● In order to prevent moisture in the air from condensing and forming water in the fuel tank, fill the fuel tank up after the daily work.
● Before starting the engine, or 10 minutes after refueling, drain the sediment and water in the fuel tank.
● If the fuel of the engine is used up, or if the filter element is replaced, the air in the oil circuit shall be discharged.

Lubrication grease

● Grease is used to prevent distortion and noise at the connection.
● If any part appears inflexible or produces noise after long-term use, greasing shall be carried out.
● Wipe off the old grease squeezed out during greasing.
● Be careful to wipe off the old grease anywhere. Sand or dust sticking to the grease will cause wear of the rotating parts.

Coolant

● Antifreeze shall be used in any climate.
● Check the coolant level according to regulations, and add it in time if it is found to be insufficient. Insufficient coolant will cause the engine to overheat.
● According to the ambient temperature, select a suitable mixing ratio of coolant and antifreeze.
● Do not add coolant if the engine is overheated or not yet cooled.

Filter element

● All filter elements shall be replaced regularly. But during working in harsh conditions, the filter element shall be replaced in a short term according to the lubricating oil and fuel (sulfur content) used.
● Do not reuse the cleaned filter element (filter element type). Replace it with a new one.
● During replacing the filter element, check whether there are metal particles adsorbed on the old filter element. If so, please contact your Yuchai dealer.
● Before use, do not open the package of the back-up filter element.

Hydraulic system

● During and after work, the hydraulic system is under high temperature. And it is still under high pressure during operation. Therefore, pay special attention to waiting for the temperature to drop and release the pressure in the hydraulic cylinder pipeline when checking and maintaining the hydraulic system.
● During loosening plugs, screws or hose joints, do not stand in front of the parts. Before disassembling, loosen them gradually to release the internal pressure.
● During inspecting or maintaining the hydraulic oil circuit, be sure to discharge the air to release the internal pressure.
● The inspection or maintenance of the hydraulic system includes: checking the hydraulic oil level, replacing the filter element and filling hydraulic oil.
● During removing the high-pressure hose, check whether the O-ring is damaged. If so, replace it.
● During disassembling parts at the position sealed by O-rings or gaskets, clean the installation surface and replace with new parts.
● During installing the hose, it is not allowed to twist or bend the hose into a small diameter circle. This will damage the hose and significantly shorten the service life of the hose.

Mandatory replaceable parts

Some parts, mainly some oil hoses play an important role in safety, and their materials are easy to age, wear or deteriorate with the working time of machine, affecting their normal functions, and becoming safe potential hazards at the same time. These problems are not easy to check. Therefore, these parts shall be replaced compulsorily after the specified time limit.

If these parts are abnormal before the specified time limit, they shall be repaired or replaced immediately. During replacing the hose, the corresponding seal shall also be replaced.

Oil selection table

Choose suitable oil according to factors such as ambient temperature and operating conditions, etc. It is necessary to use oil that meets the following specifications.

	Lubricating oil or fuel	Operating temperature	Viscosity	Recommended alternative oil
Engine lubricating oil	CI-4 SAE 15W/40 CI-3 SAE 5W-30	-15°C ~+40°C -25°C~+30°C		
Hydraulic oil	Low temperature area: HS46+ general area: HMP46+	Above -35 ° C - above 25 ° C	At 40°C 46±4.5 (㎟/s)	The hydraulic oil meeting the requirements of Technical Specification for Hydraulic Oil of Construction Machinery in the enterprise standard of Yuchai Heavy Industry
Lubricating oil for the walking reducer	Gear oil (GL-5) for heavy-duty vehicles	Universal in winter and summer		SAE80W/90
Lubricating oil for the rotary reducer	Gear oil (GL-5) for heavy-duty vehicles	Universal in winter and summer		
Lubricating oil for the guide wheel and the supporting wheel	SAE80W-90	Various temperature	At 50°C 20 ~ 25(㎟/s)	
Lubrication grease	Molybdenum Disulfide Lithium Grease (No. 3)	-20°C ~ 160°C		
Fuel oil	In summer: No. 0 light diesel In winter: - No. 10 light diesel - No. 20 light diesel - No. 35 light diesel	>0℃ 0℃ ~ -5℃ -5℃ ~ -15℃ -15℃ ~ -28℃		
Coolant (antifreeze) (glycol type engine)	JT 225-1996 - No. 25 - No. 35 - No. 45	>- 15 ℃ >- 25 ℃ >- 35 ℃		

● Oil volume data

Category	Unit	Value
Fuel tank	L	270
Engine oil	L	9~12
Hydraulic oil tank	L	105

Tightening torque

Refer to the values in the below table for the tightening torque of each mounting bolt and nut on the machine. If the bolts or nuts are not tightened to the specified torque, the tightened or connected parts will loosen or even be damaged, causing machine failure or abnormal operation.

Tightening torque of general parts

Bolt strength grade	Yield strength N/mm²	Bolt nominal diameter mm							
		6	8	10	12	14	16	18	20
		Tightening torque Nm							
8.8	640	9-12	22-30	45-59	78-104	124-165	193-257	264-354	376-502
10.9	900	13-16	30 -36	65-78	110-130	180-210	280-330	380-450	540-650
12.9	1080	16-21	38 -51	75-100	131-175	209-278	326-434	448-597	635-847

Bolt strength grade	Yield strength N/mm²	**Bolt nominal diameter mm**						
		22	24	27	30	33	36	39
		Tightening torque Nm						
8.8	640	512-683	651-868	952-1269	1293-1723	1759-2345	2259-3012	2923-3898
10.9	900	740-880	940-1120	1400-1650	1700-2000	2473-3298	2800-3350	4111 -5481
12.9	1080	864-1152	1098-1461	1606-2142	2181-2908	2968-3958	3812-5082	4933-6577

Tightening torque of hydraulic hose

Metric threaded rotary nut			
Metric thread	Outer diameter of steel pipe	N.m	
		Nominal moment	min./max
M12X1.5	6	20	15 -25
M14X1.5	8	38	30-45
M16X1.5	8 10	45	38-52
M18X1.5	10 12	51	43-85
M20X1.5	12	58	50-65
M22X1.5	14 15	74	60-88
M24X1.5	16	74	60-88
M26X1.5	18	105	85-25
M30x2	20 22	135	115-155
M36x2	25 28	166	140-192
M42x2	30	240	210-270
M45x2	35	290	255-325
M52x2	38 42	330	280-380

Tightening torque of hydraulic hose

BSP thread and rotary nut		
	Nm	
BSPP thread	Metric torque	min. / max
G1/4	20	15-25
G3/8	34	27-41
G1/2	60	42-76
G5/8	69	44-94
G3/4	115	95-135
G1	140	115-165
G1.1/4	210	140-280
G1.1/2	290	215-365
G2	400	300-500

ORFS rotary nut			
		Nm	
UNF thread	Marking line specifications	min	max
9/16-18	-4	14	16
11/16-16	-6	24	27
13/16-16	-8	43	47
1-14	-10	60	68
1.3/16 -12	-12	90	95
1.3/16 -12	-14	90	95
1.7/16 -12	-16	125	135
1.11/16 -12	-20	170	190
2-12	-24	200	225

Regular Inspection and Maintenance Table

Regular inspections and maintenance shall be performed on the machine according to the following table, with consideration of the working hours of the machine marked by the engine timer. If the working condition of the machine is very bad or the working intensity is high, or it is equipped with accessories such as hydraulic breaker hammer, etc., the inspection and maintenance period of some parts shall be reduced.

Serial number	Page number	Inspection and maintenance details	Maintenance period (total working hours)					
			10	50	100	250	500	1000
1		Routine inspection						
		• Whether there is leakage of oil, water or fuel	▲					
		• Appearance of mechanical parts and hoses	▲					
		• Fixing situation of bolts and hydraulic joints	▲					
		• Work condition for the working components, working	▲					
		• Work condition for the diesel engine	▲					
2		Engine fuel system						
		• Check the fuel level and refill	▲					
		• Eliminate condensate and impurities			▲			
		• Clean the fuel tank				▲		
		• Check the oil injection pressure					▲	
		• Replace the filter element					☆▲	
3		Engine cooling system						
		• Check the status of rubber hoses and clamps	▲					
		• Check the cooling water level	▲					
		• Clean the radiator fins					▲	
		• Replace the coolant						■
		• Check the coolant concentration	▲					
4		Engine lubrication system and others						
		• Check the oil level of the engine oil (refill if necessary)	▲					
		• Replace the oil					☆▲	
		• Replace the oil filter element					☆▲	
		• Check the tension of the fan belt		☆	▲			
		• Check the valve clearance					☆	▲
		• Check the tightness of the cylinder head					☆	▲
		• Check the tightness of the engine support		☆			▲	

Regular Inspection and Maintenance Table (continued)

Serial number	Page number	Inspection and maintenance details	Maintenance period (total working hours)						
			10	50	100	250	500	1000	2000
5		Engine air intake system							
		• Empty the dust container	▲						
		• Clean the air filter element			▲				
		• Replace the air filter element					▲		
6		Hydraulic system							
		• Check the hydraulic oil level (refill if necessary)	▲						
		• Remove water and dirt from the oil tank				▲			
		• Replace the hydraulic oil and clean the oil suction							☆▲
		• Replace the oil return and pilot filter element						☆▲	
		• Check system pressure					▲		
7		Battery							
		• Check the electrolyte level		▲					
		• Check acidity and charging status					▲		
8		Reducer							
		• Check the oil level and refuel				▲			
		• Replace the oil						☆▲	
		• Check the tightening torque of the reducer		☆			▲		
9		Track							
		• Check and adjust the tension of the track	▲						
10		Thrust wheel, supporting wheels and guide wheels							
		• Check the tightening torque of the thrust wheels		☆			▲		
		• Check the oil level of the guide wheel and the						▲	
11		Lubrication							
		• Add lubricating oil to each lubrication point		▲					

▲ Perform at normal cycle ☆ Perform during the first maintenance ■ Perform once every spring and autumn

Routine inspection

The general routine inspection shall be carried out for the machine every day or every 10 hours.

1) Leak inspection, check whether there are oil, water and fuel leaks in various parts of the machine.
2) Check whether there are scratches, breaks or deformations on the elastic connectors and accessories.
3) Check the fixing and connection of the hydraulic device.
4) Check the appearance of mechanical parts.
5) Check the working conditions of operating devices, control indicator lights and various indicators.
6) Check the working condition of the engine. Whether there is any problem with the exhaust color and abnormal sound, and determine the position of the abnormal sound.

Maintenance instruction

Oil tank capacity.....270 liters
Check oil level..... 10 hours
Drain water and impurities from oil tank.....100 hours
Clean the oil tank..... 250 hours
Check the injection pressure for .....500 hours
Replace the fuel filter element..... 500 hours

1. Oil level inspection and refueling

The fuel level shall be checked through the fuel level indicator on the combined instrument on the front right of the cab. Check every day or every 10 hours.
In order to avoid the formation of condensate, the fuel tank shall be filled after daily work. The fuel filler port is located in front of the fuel-hydraulic tank.

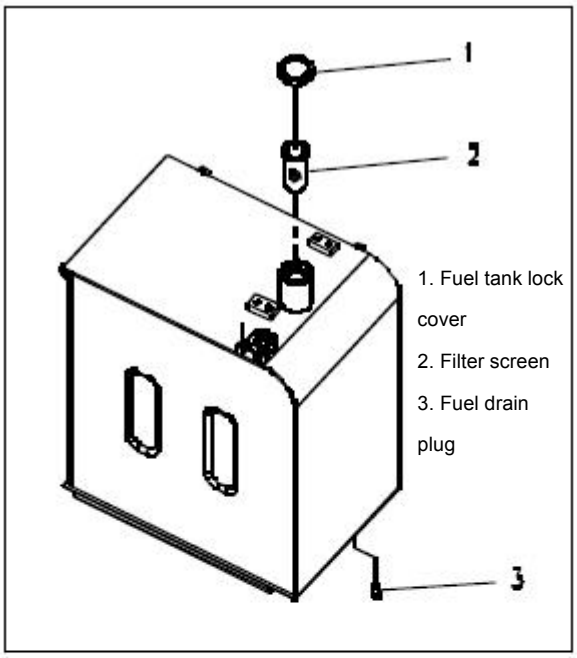

A Direct refueling

Open the fuel tank filler cap and pour the fuel into the fuel filler port.

B Use the refueling pump (optional)
Put the filler pipe into the oil barrel, press the switch '-', and the oil pump will automatically suck the oil into the oil tank. When the oil tank is full, press the switch '○' to stop refueling.

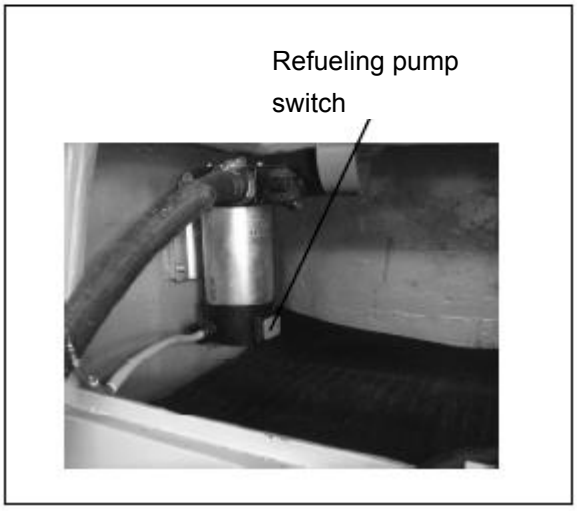

2. Drain water and impurities from the fuel tank

The condensate and sediment shall be removed every 100 hours.
Loosen the fuel drain plug to allow the condensate and sediment to flow out. Once the fuel flows out, reinstall the fuel drain plug. According to the quality of fuel used, the user can re-determine the cycle of draining condensate;

3. Clean the fuel tank

Clean every 250 hours.

1) Prepare a container to receive the discharged fuel

2) Remove the fuel drain plug and take out the filter screen located in the filler port. Fill the correct amount of fuel and empty it again.

3) Clean the refueling filter screen and install it in place.

4) Reinstall the fuel drain plug and fill up the fuel through the filter screen in the fuel filling hole.

4) Discharge the air in the oil circuit.

Note: During flushing the inside of the fuel tank, only diesel shall be used instead of trichloroethylene.

4. Check the oil injection pressure

Check every 500 hours.

The injection pressure should be checked regularly at the intervals shown in the maintenance table. Adjust if necessary. This inspection shall be carried out by our agency!

The working efficiency of the engine basically depends on the working condition of the fuel injection nozzle, so it must be maintained regularly to ensure its normal operation.

In order to better use the engine, the excavator driver should pay attention to the signs indicating that the fuel injection nozzle does not work well:

A. Impact sound coming from single cylinder or multicylinder; B. Engine overheating; C. Reduced efficiency; D. Black exhaust; E. Increased fuel consumption.

These signs may also be caused by the following reasons, so the following inspections should be carried out first:

A. The air inlet and exhaust valves are not well sealed; B. The fuel injection nozzle is not adjusted correctly; C. The fuel filter is dirty or damaged; D. Poor fuel quality;

E. There is water in the fuel; F. The air filter is dirty or blocked.

5. Discharge the fuel circuit

During the replacement of fuel filter element, disconnecting of the fuel line, cleaning the fuel filter, or the fuel tank is unintentionally emptied, if air flows into the fuel circuit, it shall be exhausted before restarting the engine.

1) Open the exhaust screw on the fuel filter seat;

2) Operate the filler plug of the filling pump until there is no air in the fuel flowing out from the exhaust screw;

3) Close the exhaust screw on the fuel filter seat;

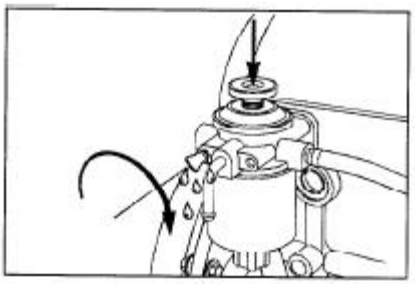

Warning: The fuel pressure in the high pressure fuel pipe is sufficient to penetrate the skin and may cause serious personal injury.

Wear gloves and protective clothing before operation.

6. Diesel prefilter (diesel strainer)

Replace the filter element every 500 hours (see the section "Replace the fuel filter element" below).
Drain the water and sediment in the oil-water separator every day.

1) Turn off the engine, open the drain valve by hands, turn the valve counterclockwise for about three and a half turns, until the valve drops at 25.4 mm (1 in) and begins to drain;
2) Drain the water from the separator until the clean fuel is visible.
3) When the drain valve is closed. Turn the valve clockwise until it is tightened by hands.

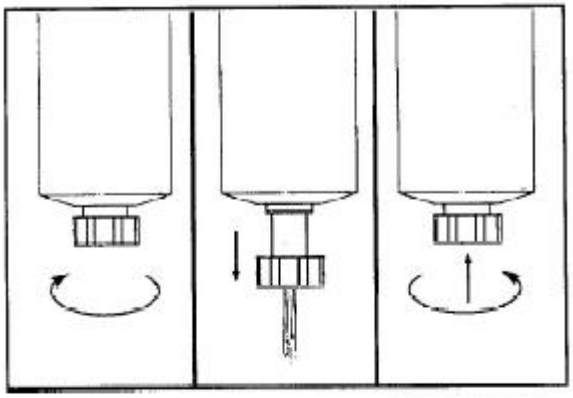

Turn the valve counterclockwise | Valve lowering | Turn clockwise

Note: Do not overtighten the drain valve when closing it. Overtightening will damage the thread.

7. Replace the fuel filter element

The first replacement shall be carried out after 500 hours working for a new machine, and thereafter the filter element shall be replaced every 500 hours or every 6 months. Be sure to use the original filter element.

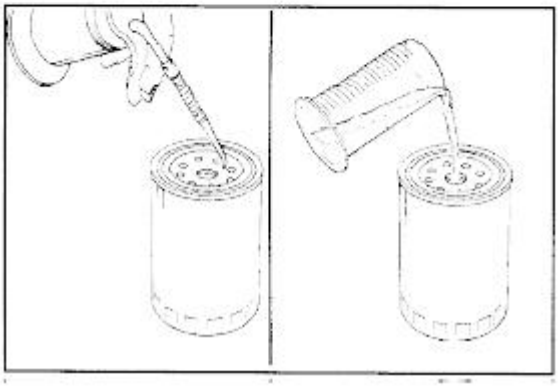

1) Remove the fuel filter;
2) Clean the gasket surface of the filter seat with a lint free cloth;
3) Discard the O-ring;

Note: Check whether there is an old seal on the filter element seat. It will cause oil leakage if the old seal is stuck on it.

5) Fill up the new filter with clean fuel, and lubricate the O-ring with clean engine oil;

6) Install the fuel filter as specified by the filter manufacturer.

Note: In order to reduce the possibility of fuel leakage, ensure that the fuel filter is installed tightly but not too tightly. Excessive mechanical tightening will damage the fuel filter.

7) After replacing the filter element, start the engine and check the sealing surface of the filter element for oil leakage.

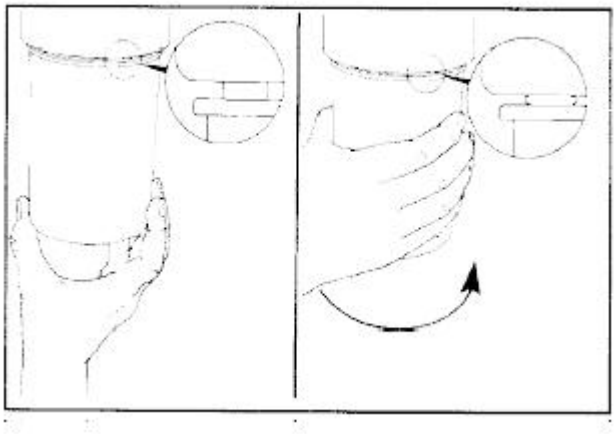

Maintenance instruction

Check the coolant level..... every day or every 10 hours of operation
Check the status of rubber hoses and clamps..... every day or every 10 hours of operation
Clean radiator fins..... every 500 hours of operation
Change the coolant..... every 2000 hours of operation
Check the coolant concentration.....every day or every 10 hours of operation

1. Check the coolant level
Check the liquid level position of the coolant in the radiator before starting the new machine, and check it every day or every 10 hours thereafter.

Remove the radiator (water tank) cap and check the level of the coolant. When the engine is cold, the coolant level shall locate at 20 mm below the water filler port.

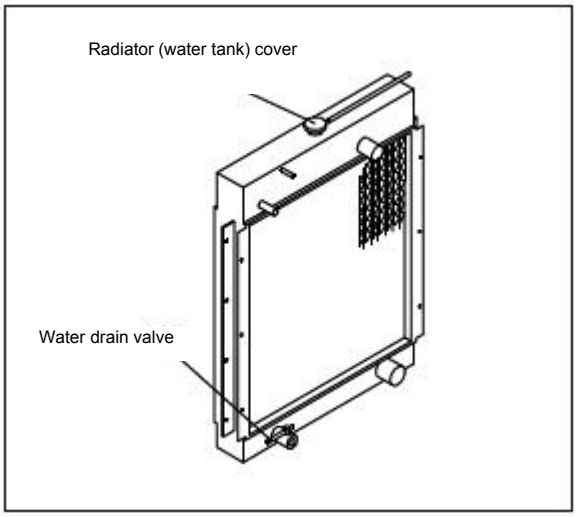

Warning: the hot coolant will spray out when the radiator cover is unscrewed. How to unscrew the cover: After the system cools down, loosen the cover slightly and wait for the pressure to be completely released. If you unscrew the cover very quickly, the coolant will spray out, possibly causing personal injury.

2. Check the status of rubber hoses and clamps

Check every 10 hours or every day.
Check the rubber hose. If it is cracked or hardened due to aging, replace it with a new hose.
Check whether the hose clamp is locked tightly. If it is loose or damaged, replace it in time.

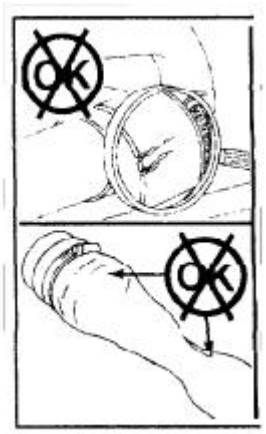

3. Clean and inspect the radiator fins

Clean every 500 hours.
Dust on the outer surface of the radiator (water tank) will affect the cooling effect and shall be cleaned in time.

Open the engine hood and blow away the dust or leaves and other debris that block the oil cooler fins of the radiator fins with high-pressure water or compressed air. Clean the protective net in front of the oil cooler at the same time. For machines equipped with air-conditioning, the condenser fins shall also be cleaned.

⚠	Warning: If compressed air, high-pressure water and steam hit the body directly, or use them to blow away dust or dirt, there is a danger of serious injury. Goggles, dust masks and other protective masks shall be used.

Note: In order to prevent damage to the radiator fins, the distance between the nozzle of high-pressure water or compressed air and the surface of the radiator (water tank) shall be greater than 500 mm.
A damaged radiator fins may cause water leakage or overheating. In dusty sites, check the radiator fins every day regardless of the maintenance cycle.

4. Change the coolant

Change it every 2000 hours during machine work.

1) Remove the radiator (water tank) cover, unscrew the water drain valve, and drain the coolant;
2) Clean the cooling circuit, close the water drain valve, fill up the special cleaning fluid, then start the engine, operate the engine at low speed for 10 minutes, and then stop the engine to discharge the cleaning fluid;
3) Close the water drain valve again;
4) Fill up the coolant, make the engine idle for a few minutes, so that the coolant fills the entire cooling circuit;
5) Check the coolant level and replenish the coolant.

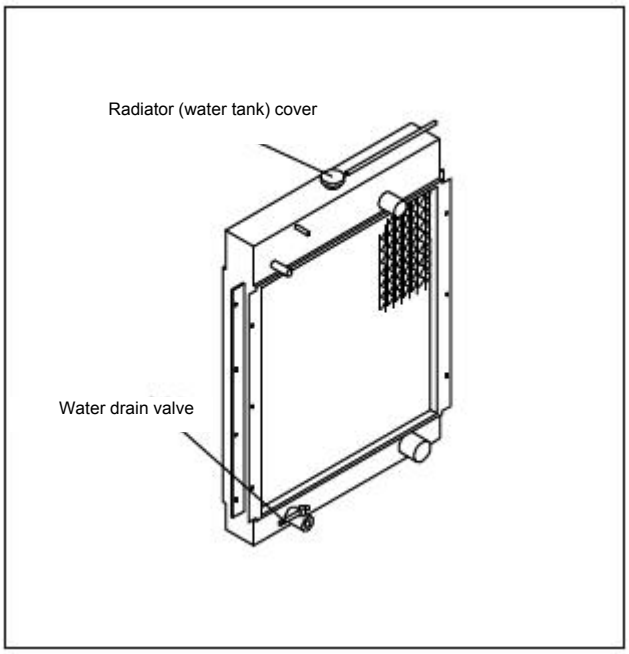

⚠	Warning: Do not open the radiator (water tank) cover from a hot engine. The radiator cover shall not be opened until the temperature of the coolant drops below 50°C. Otherwise, the hot coolant or steam may cause personal injury.

5. Check the coolant concentration

Before the cold season begins, check the concentration of the coolant. The coolant shall be able to work at an ambient temperature of minus 20 degrees Celsius. If the ambient temperature is lower, the specific gravity of the antifreeze shall be increased.

⚠	Warning: Coolant is toxic. Keep children and pets away from the coolant. If it is no longer used, it shall be disposed in accordance with local environmental regulations.

⚠	Warning: Antifreeze shall be used in any climate. Don't just use water as a coolant. Otherwise, the machine may be damaged due to corrosion. The river water contains a lot of calcium and other impurities. If river water is used, scale will be formed and adhere to the engine cooling water channel and radiator, causing heat exchange failure and overheating. If the antifreeze splashes into the eyes, wash eyes immediately with water and go to the hospital for treatment in time.

Engine lubrication system

Maintenance instruction

Check oil level..... Every 10 hours of operation or every day
Change the oil or replace the fuel filter element..... Every 500 hours of operation

1. Check the oil level

Check the oil level once before the new machine is put into use, and check it every 10 hours thereafter.
1) Park the excavator on a level ground and stop the engine.
2) Open the engine hood, take out the oil dipstick, and observe the oil sticky part on the oil dipstick. The oil level should be located between the minimum (L) and maximum (H) marks.
3). If necessary, you can fill oil from the oil port to make the oil level reach the specified value.

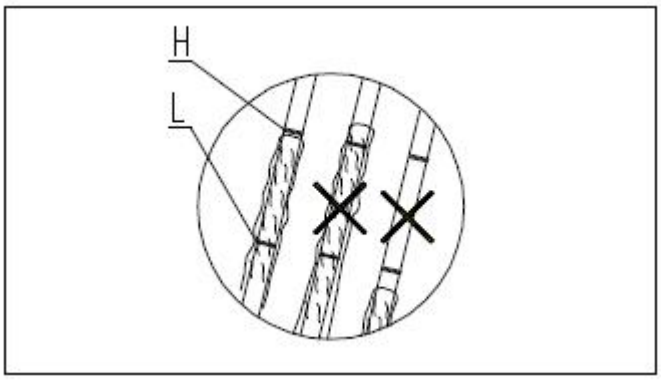

Warning: After the engine is turned off, the parts and oil are still at high temperature, which may cause serious burns. Before starting maintenance, wait for the temperature to drop.

2. Change the engine oil

The oil shall be changed after new machine works for 500 hours, and then it will be changed every 500 hours.
1) Park the excavator on a level ground and stop the engine, and drain the oil while it is hot.
2) Remove the oil drain plug to make the oil flow out completely.

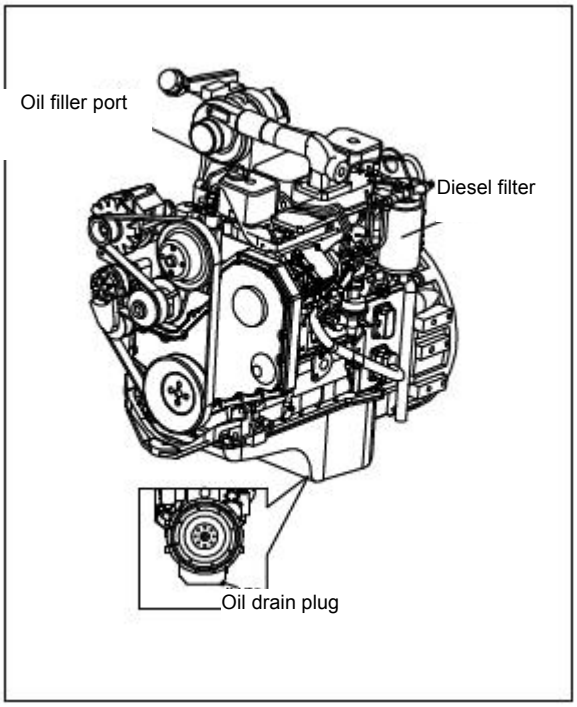

Note: The positions of oil filler port and oil drain port may be different for different models of engines,

Avoid inhaling engine oil vapor, swallowing, and contacting with used engine oil for a long time.

3) Clean the drain plug and reinstall it. If the seal ring is damaged, replace it.
4) Open the oil filler port.
5) Refill with new oil until the oil reaches the "Maximum" mark H on the oil dipstick.
6) Cover the oil filler cap and allow the engine to idle for 5 minutes.
7) Check the oil level 10-20 minutes after the engine is stopped. Add oil if necessary.

3. Replace the engine oil filter element

After 500 hours of the working of new machine, the filter element shall be replaced, and then it will be replaced every 500 hours.

Replace the oil filter

1) Clean the area around the filter seat, remove the oil filter, and clean the sealing gasket surface on the filter seat;
2) The oil filter has two gaskets, which are lubricated;
3) Before installing the filter, apply a layer of engine oil on the surface of the sealing gasket;
4) Install the oil fuel filter as specified by the oil filter manufacturer.
5) Run the engine at low idle speed and check whether the oil filter leaks;
6) Shut down the engine and wait for 15 minutes to allow the oil in the engine parts to fully flow back;
7) Check the oil level and, and add oil to the maximum mark "H" on the oil dipstick if necessary.

Maintenance instruction

Cleaning cycle of air filter element..... Every 100 hours of operation
Replacement cycle of air filter element..... Every 500 hours of operation

Air intake pipe inspection

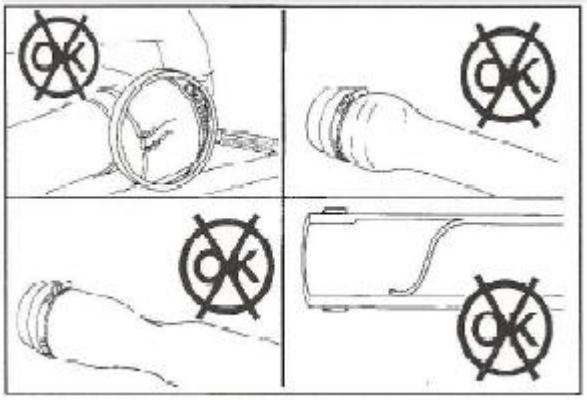

Check the intake pipe every day for signs of damage to the engine, such as worn points, damaged pipes, loose clamps or broken pipes, etc.

If necessary, replace damaged pipes and tighten loose clamps to ensure that the air intake system does not leak.

Other maintenance for engine

⚠	Warning: To prevent injury, do not maintain the engine while the engine is running. If maintenance must be performed while the engine is running, the operation shall be performed with at least two people and the following regulations shall be followed: One person shall sit in the operator's seat and ready to shut down the engine at any time. All personnel shall keep in touch with each other. During operating close to the fan, fan belt or other rotating parts, there is a danger of being caught by the parts, so pay special attention. Do not drop or insert tools or other objects into the fan or fan belt. Otherwise, the parts may break or fly out.

⚠	Warning: If the noise of the machine is too loud, it will cause temporary or permanent hearing problems. During performing engine maintenance and prolonged exposure to noise, wear earmuffs or earplugs.

- ## Check the tension of the fan belt

Perform the first inspection after new machine works for 50 hours. Check every 100 hours thereafter.

In order to ensure the normal operation of the generator and the service life of the belt, the fan belt shall be properly tensioned.

For a correctly tensioned belt, apply 6 kg perpendicular to the belt between the fan pulley and the crankshaft pulley, and the sinking amount for the belt is about 10 mm.

If the belt is found to be damaged, it shall be replaced.

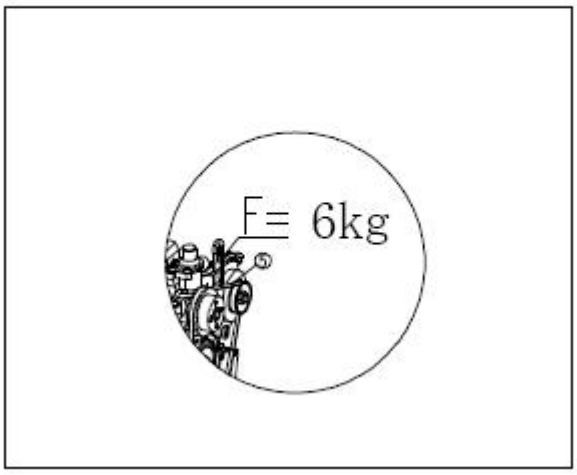

- For the maintenance cycle and specific methods of other components of the engine, please refer to the "Diesel Engine Operation Manual" attached to this machine.

Maintenance instruction

Hydraulic oil tank capacity	105 liters
Check the oil level	every 10 hours
Replace the filter element	every 1000\2000 hours
Change the hydraulic oil	every 2000 hours
Check the system pressure	every 500 hours

Warning: If hydraulic oil or grease is injected into the skin, which may cause serious injury and death. To prevent your hands or body from approaching the pressure oil leakage area. Cardboard or paper shall be used to check for leaks. If hydraulic oil is accidentally injected into the skin, go to the hospital for treatment immediately.

Warning: To avoid scalding, maintenance shall only be carried out after the hydraulic oil has cooled down or the oil is cold before daily work.
During removing the oil filler flange cover, in order to prevent the oil from spraying out, slowly turn the cover to release the internal pressure.

1. Check the oil level in the hydraulic oil tank

Check the oil level of the hydraulic oil tank every 10 hours.

1) Park the machine on a level surface.
2) Start the engine to make each cylinder reciprocate.
3) Retract the stick cylinder, extend the bucket cylinder, and then the bucket falls to the ground, the bulldozer shovel shall be placed on the ground and shut down. As the figure shows.
4) Observe the hydraulic oil level through the oil gauge tube on the hydraulic oil tank.

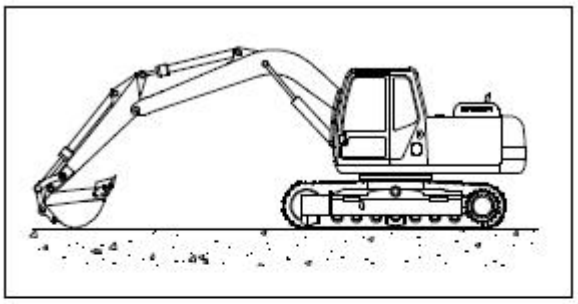

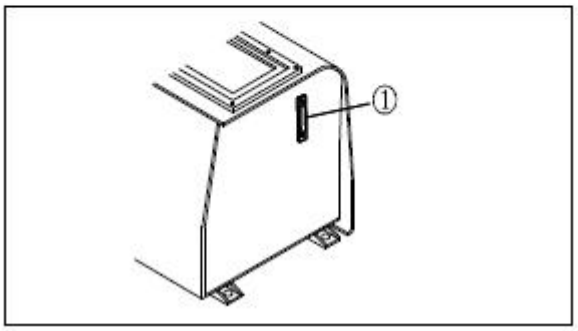

The liquid level of the hydraulic oil shall be observed through the oil gauge tube (as ① in the figure).
The hydraulic oil level shall be clearly seen on the oil gauge, and the oil shall not be filled over much, otherwise the level can not be seen the oil gauge tube. Since this may cause damage to the hydraulic oil circuit or injection of oil. If the refueling is too full, stop the engine and drain the excess oil from the oil drain plug after the oil cools. If the oil gauge shows that the liquid level is too low or the liquid level is not visible, oil shall be refilled in time through the oil filler port on the top of the hydraulic oil tank.

Note: The hydraulic oil level will change with the increase of oil temperature during operation. Before operation, the oil level shall be in the middle of the oil gauge tube. During normal operation, the oil temperature will rise, and the oil level will be closer to the upper end of the oil gauge tube.

2. Remove the water and dirt from the hydraulic oil tank

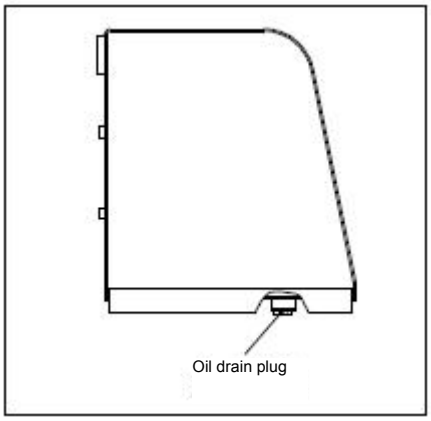

Drain the water and dirt from the hydraulic oil tank every 250 hours.

1) After stopping the machine until the oil temperature drops or before starting work every day, discharge the air from the oil tank.
2) Slowly loosen the drain valve or the drain plug at the bottom of the fuel tank (as shown in the figure).
3) Drain water or dirt until the clear and clear hydraulic oil is discharged. Close the drain valve again or tighten the screw plug.
4) Fill oil if the oil in the oil tank is insufficient.

3. Change the hydraulic oil and clean the oil suction screen

The first replacement shall be carried out after 2000 hours working for a new machine, and thereafter it shall be done every 2000 hours.

> ⚠ Warning: 1) In order to avoid burns, drain the oil only after the hydraulic oil has cooled down or the oil is cold before daily work.
> 2) During removing the oil filler flange cover, in order to prevent the oil from spraying out, slowly turn the cover to release the internal pressure.
> 3) During replacing the oil, be careful not to let water, dirt, sand, etc. enter the oil tank.

Oil change procedures:

1) Park the excavator on level ground.
2) Slowly loosen the air filter on the upper filler flange assembly of the fuel tank to reduce the air pressure stored in the fuel tank.
3) Pump the hydraulic oil with the oil pump and put it into the empty oil barrel.
4) Loosen the drain valve or the drain plug at the bottom of the tank to completely drain the remaining oil.
5) Remove the oil suction filter.
6) Thoroughly clean the inside of the oil tank.
7) Clean the drain plug and reinstall it.
8) Clean the oil suction filter.
9) Add the hydraulic oil that meets the standard, and the new oil shall be added to the oil tank to the middle position.
10) Install the oil suction filter and cover the air filter.

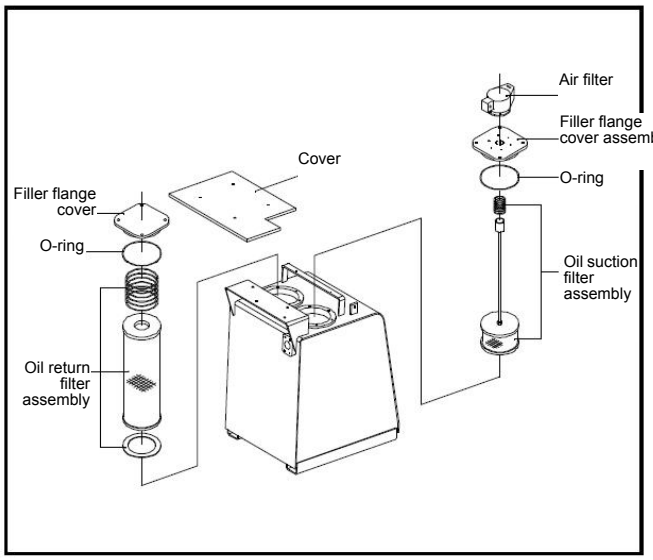

4. Discharge the air in the hydraulic system

A. Discharge the air in the pump

1) Loosen the exhaust screw plug in the exhaust port, and check whether there is oil flowing out. The exhaust is completed.
2) Tighten the screw plug after the exhaust is completed.

Note: If the pump is operated if the pump is not full of oil, it will be abnormally heated and cause premature damage to the pump.

B. Discharge the air between the pump and the hydraulic oil tank

1) Start the engine and keep it running at medium and low speeds.
2) Operate the working device slowly for about 5 minutes to discharge the air.

Note: If the air between the pump and the fuel tank is not discharged to allow the engine to run at a high speed, it will also cause the pump to be heated and damage the pump.

C. Discharge the air in the oil cylinder

1) At low engine speed, extend and retract the oil cylinder to the position where is about 100 mm away from the stroke end for 4-5 times. (Be careful not to extend or retract to the stroke end).
2) Then, operate each cylinder to the stroke end for 3 to 4 times.
3) Finally, operate each cylinder to the stroke end for 4~5 times to completely discharge the air.

Note: If the engine is operated at high speed or the oil cylinder is operated to the stroke end immediately after starting the machine, the air in the oil cylinder will damage the piston seal and damage the oil cylinder.

D. Discharge the air in the rotary motor (when the oil in the housing of the rotary motor is discharged)

Note: During the exhaust, the machine cannot be rotated under any circumstances.

1) Run the engine at idle speed, loosen the exhaust plug, and check whether the oil flows out from the exhaust plug.
2) If there is no oil flowing out, remove the exhaust plug and fill the motor housing with hydraulic oil.
3) After the exhaust is completed, tighten the exhaust plug.
4) Finally, run the engine at a low idle speed and slowly turn the upper part of the car body left and right at least twice. So that the air is completely discharged.

Note: If the air in the motor is not discharged, the bearings of the rotary motor may be damaged.

E. Discharge the air in the walking motor (when the oil in the casing of the walking motor is discharged)

1) Run the engine at idle speed and loosen the exhaust plug. If oil comes out, tighten the screw plug.
2) Run the engine at idling speed and rotate the working device in 90 degree so that it is located on the side of the track. (As shown on the right)
3) Jack up the machine with the working device, keep the track on one side slightly away from the ground, and rotate the track for 2 minutes under no load. Repeat this action on the left and right tracks and rotate the tracks forward and backward equally.

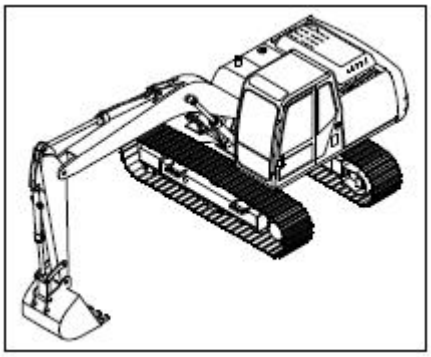

F. Discharge the air in the accessories

If the accessory is installed, run the engine at idle speed and operate the accessory pedal several times (about 10 times) until the air is discharged from the accessory oil circuit.

Note:
1. If the manufacturer specifies a specific exhaust method, which shall be followed strictly.
2. After the exhaust operation is completed, turn off the engine and let the machine stand for at least 5 minutes before starting operation to eliminate air bubbles in the oil in the hydraulic cylinder.
3. There shall be no leakage during the inspection. Wipe the spilled oil if any.
4. After the exhaust operation is completed, check the oil level, and fill it if the oil level is low.

5. Replace the oil return filter element

The first replacement shall be carried out after 1000 hours working for a new machine, and thereafter it shall be done every 1000 hours.

The oil return filter is in the hydraulic oil tank, so:

1) Unscrew the cap on the top of the tank.
2) Remove the spring, bypass valve, and oil return filter from the inside of the tank.
3) Replace the filter element with a new one, clean the spring and bypass valve, and reinstall them.
4) Install the fuel tank cap.

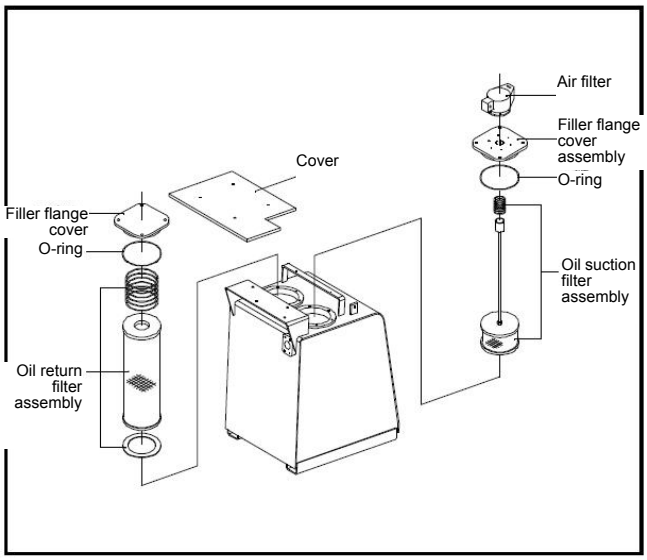

6. Replace the fuel filter element of pilot oil circuit

The first replacement shall be carried out after 1000 hours working for a new machine, and thereafter it shall be done every 1000 hours.

Note: Be sure to discharge the air pressure in the hydraulic oil tank before removing the filter element.

1) Unscrew oil filter housing.
2) Remove the filter element.
3) Install the new O-ring in the filter head groove.
4) Before assembling the new filter element, apply a layer of hydraulic oil on the sealing surface of the filter element and install the filter element into the filter head.
5) Clean the oil filter housing and soft magnet, and be careful not to allow dirt, dust or water to enter the oil filter housing.
6) Tighten the oil filter housing and filter head with a torque of 25~35 N.m.
7) Connect the pipeline and start the engine slowly. Operate continuously for 3-5 minutes to discharge the air in the system.
8) Park the machine on the level ground, stop the machine to check the oil level, and add oil if necessary. Pay attention that the oil filling shall not exceed the required maximum oil level limit.

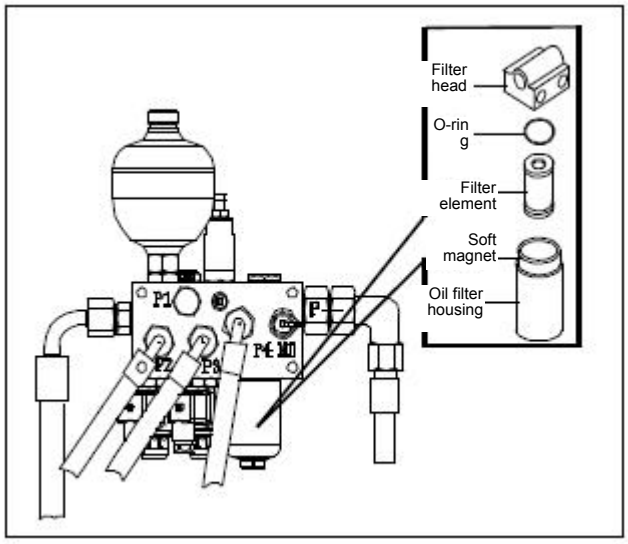

■ The replacement cycle of hydraulic oil and filter elements during using accessories (such as breaker hammer)

Since if the hydraulic hammer is used, the pollution of the hydraulic system is increased and corrosion is accelerated. Compared with excavating devices, the replacement cycle of hydraulic oil and filter elements shall be shortened accordingly, so as not to damage the hydraulic pump and other hydraulic components. The recommended replacement cycle is as follows: (unit: hour)

Hydraulic hammer operating rate	Hydraulic oil replacement cycle (H)	Filter element replacement cycle (H)
50%	1000	Oil return filter element 750, oil suction filter element 1500
100%	500	Oil return filter element 500, oil suction filter element 1000

Note: If a hydraulic hammer is used, the system pressure shall be adjusted appropriately according to the requirements of the hydraulic hammer.

Battery

Warning: 1) The battery contains sulfuric acid liquid, which is highly corrosive. Please keep it away from children. Users should wear protective glasses and rubber gloves when operating the battery. Once the eyes, skin and clothes are splashed with sulfuric acid, wash them with plenty of water immediately, and go to the hospital for treatment in serious cases.
2) The battery will generate hydrogen and oxygen during charging. Once it catches an open flame or the exhaust port is blocked, it will cause explosion. Therefore, the battery should be far away from the open flame to avoid short circuit.
3) The battery case is made of polypropylene by injection molding, which is flammable and should be kept away from open fire.

1. Battery storage

1) This series of products are lead-acid batteries with charged fluid. They should be stored in a dry, clean and well ventilated environment at 5~25 ℃. They should be free from direct sunlight and at least 2 m away from the heat source. If the ambient temperature is too high, the performance of the battery will be greatly affected.
2) The battery shall not be placed upside down and horizontally, and shall not be subjected to any mechanical impact and heavy pressure.
3) The storage period of this series of batteries at room temperature is 6 months, and the batteries can be used without recharging within 6 months. If the storage period of the battery exceeds 6 months, it can still be used after recharging.

2. Charge the battery

Hydrogen and oxygen are produced by electrolyzing water in the later stage of battery charging, which causes water loss. The higher the charging voltage, the more water loss. This series of batteries do not need to be filled with water during use, so the constant voltage charging method is highly recommended and the constant current charging method is avoided as far as possible.

2.1 Recharge the battery

2.1.1) Constant current charging method
Charge the battery for 2-4 hours at the current (A) that is one tenth of the battery rated capacity at the rate of 20 hours.
2.1.2) Constant voltage charging method
Charge the battery at a constant voltage of 16V for 16h (the maximum current shall not exceed 25A).

2.2 Normal battery charging

2.2.1) Charge the battery at the current (A) that is one twentieth of the battery rated capacity at the rate of 20 hours until the battery terminal voltage reaches 14.4V, and continue charging for 2-3 hours.
2.2.2) Charge the battery at a constant voltage of 16.0V for 24h (the maximum current shall not exceed 25A).

1) The battery will produce gas during charging, and the vent hole on the battery should be checked regularly to avoid being blocked, in order to avoid battery explosion.
2) When charging the battery, connect the positive pole of the charger with the positive pole of the battery, and connect the negative pole of the charger with the negative pole of the battery. Reverse charging is strictly prohibited.
3) During the charging process, if the temperature of battery electrolyte exceeds 45 ℃, the charging voltage or charging current should be reduced as appropriate to prevent electrolyte splashing due to excessive temperature.

3. Install the battery

1) Before installing the battery, please pay attention to the safety signs on the battery label to prevent unnecessary accidents.
2) A small amount of Vaseline oil shall be coated on the end post of the battery before installation to prevent corrosion. The wiring shall be firm and reliable. It is strictly prohibited to knock the end post to prevent the battery from leaking acid due to the loosening of the end post.
3) When installing the battery, first connect the positive pole of the battery with the positive pole of the automobile generator, and then connect the negative pole of the battery with the negative pole of the generator.
4) The battery shall be firmly installed on the battery rack by upper fixing or lower fixing to avoid battery damage caused by looseness.

4. Battery maintenance

1) The battery cover is equipped with an indicator to display the battery charge state. When the indicator displays in green, the battery can be used normally. The battery shall be charged in time when the indicator displays in black, and the battery shall be replaced immediately when the indicator displays in white.
2) The battery with power loss caused by various reasons during use shall be charged in time to prevent performance degradation caused by battery sulfation.
3) The battery shall be strictly prevented from overcharging during use and charging to avoid premature failure due to excessive water loss, longer grid and lead paste falling off.
4) The battery that has been installed and used in the machine shall be removed from the machine and stored in a ventilated and dry place if it is not used for a long time (generally more than 15 days). The battery shall be recharged every 3-6 months (depending on whether the indicator is black).
5) For the battery in question, please contact the dealer in time to solve it.

Maintenance instruction

Lubricating oil capacity of rotary reducer..... 5.6L
Lubricating oil capacity of walking reducer..... 5L
Check the lubricating oil level and add oil..... every 250 hours
Replace the lubricating oil .....every 1000 hours of operation
Check the tightening torque of the reducer connecting bolts..... every 500 hours of operation

A: Walking reducer

1. Check the lubricating oil level of the walking reducer and fill oil

⚠	Warning: The oil in the reducer will heat up shortly after the machine moves. After turning off the engine, the walking reducer and oil are still at a high temperature, which can cause severe burns. Before starting operation, wait for the oil to cool down. Loosen the exhaust screw plug by two to three threads and release the air pressure in the box before removing the screw plug. It is dangerous to remove the screw plug quickly.

Check once every 250 hours.

1) Prepare an Allen wrench.
2) Park the excavator on level ground.
3) Rotate the walking reducer to make the 3 screw plugs on its outer end perpendicular to the ground, and then stop the machine.
4) Open the screw plug ① and check the position of the lubricating oil level, which should reach the lower part of the screw plug hole
5) Refill the engine oil if necessary (according to the following steps those are used for replacing the lubricating oil)
6) Clean the screw plug ① and reinstall it.

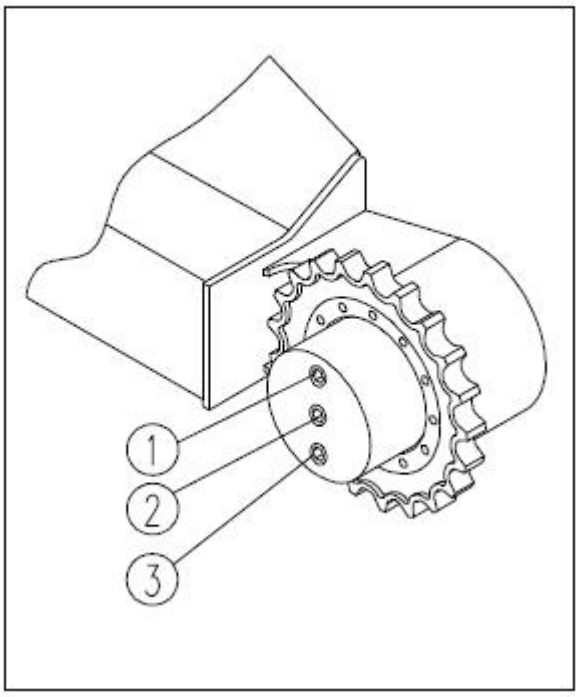

2. Replace the lubricating oil (for each reducer)

The first replacement shall be carried out after 1000 hours working for a new machine, and thereafter it shall be done every 1000 hours.

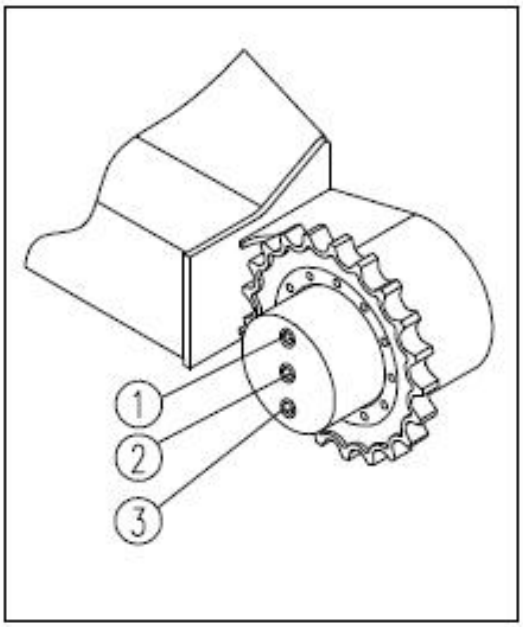

1) Park the excavator on level ground.
2) Rotate the reducer to make the 3 screw plugs on its outer end perpendicular to the ground, and then stop the machine.
3) Drain the oil when the reducer oil is hot.

Note: Don't burn yourself by hot oil.

4) Loosen screw plug ③ to drain oil, and loosen screw plug ① to drain oil completely.
5) Loosen the bolt ②.
6) Add the specified lubricating oil from the oil filling hole ① until oil flows out from the oil level inspection hole ②.

3. Check the tightening torque of the connecting bolts of the walking reducer and the rotary reducer

The tightening inspection of the connecting bolts of the walking reducer

Perform the first inspection after new machine works for 50 hours and then every 500 hours.

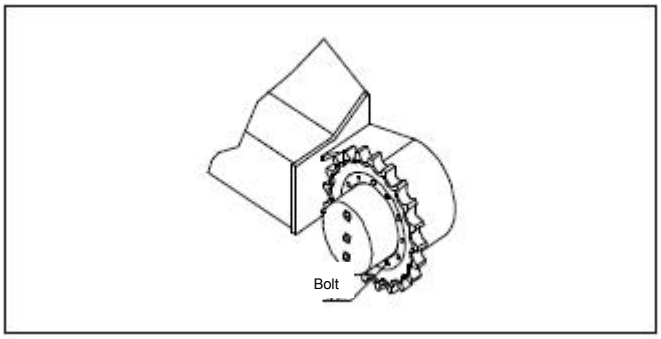

B: Rotary reducer

1. Check the lubricating oil level of the rotary reducer

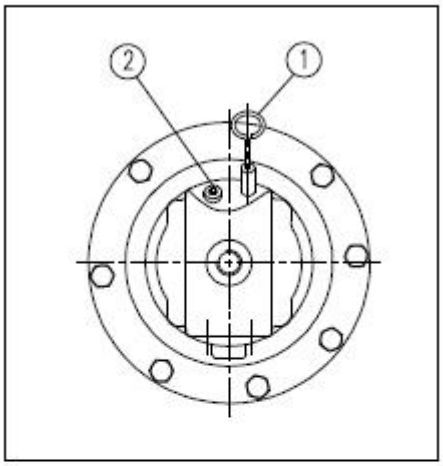

Check once every 250 hours.

1) Park the excavator on level ground.
2) Draw out the oil dipstick ①, and the lubricating oil level shall be between the upper and lower marking lines of the dipstick.
3) Refill the lubricating oil if necessary (according to the following steps those are used for replacing the lubricating oil)
4) Install the dipstick and tighten it.

2. Replace the lubricating oil of the rotary reducer

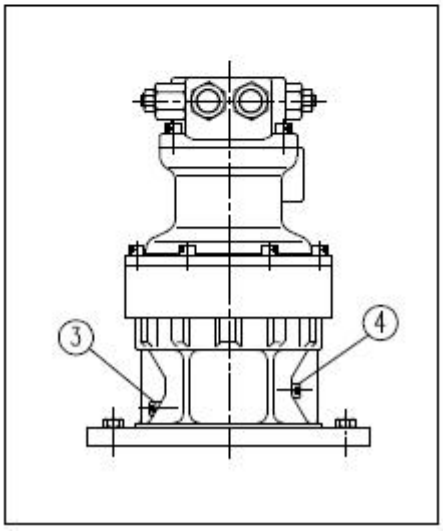

The first replacement shall be carried out after 1000 hours working for a new machine, and thereafter it shall be done every 1000 hours. Drain the oil when the reducer is hot. Be careful not to burn with hot oil.

1) Loosen the drain screw plug ④ to drain the oil, and loosen the filler screw plug ② to drain the oil.
2) Install the screw plug ④ and tighten the screw plug.
3) Add the specified lubricating oil from the oil filler port until it reaches between the upper and lower marking lines of the dipstick.
4) Install the oil dipstick and oil filling plug.

3. Lubricate the bearing of the rotary reducer

1) Loosen the screw plug ③.
2) Inject the lubricating grease by aligning the oil gun nozzle with the screw hole until the lubricating grease is squeezed out of the screw hole.
3) Tighten the screw plug again

4. The tightening inspection of the connecting bolts of the rotary reducer

The first inspection after working for 50 hours and then every 500 hours.

Tighten the bolts connecting the reducer and the platform.

5. Check the lubrication of the rotary gear

Check every 500 hours of operation, and replace the grease in the reducer after 2000 hours of operation.

1) Remove the small cover plate that is next to the boom cylinder plate on the platform. There is an observation hole from where you can observe the lubrication of gear surface.

2) If the gear surface is not lubricated sufficiently, add the grease here before the platform is rotated. The grease is evenly distributed in the oil groove, and the height of oil level should reach one third of the gear surface height.

3) If the grease is changed in the oil groove, first remove the bottom seal plate under the machine frame, then remove the oil drain plug on the frame, clean the grease in the oil groove through this hole, tighten the screw plug again, and fill the corresponding grease at the observation hole.

4) Reinstall the cover plate

Check and adjust the tension of the track

Check every 10 hours.

1) Park the excavator on a level and solid ground.

2) Remove the cover (1 in Fig. 2) on each track frame, and expose the fuel nozzle of the tensioner (① in Fig. 2).

3) In order to loosen the track, first loosen the joint ② (Fig. 2) to let the grease flow out, so that the branch amount f on the track is controlled at a deflection of 2-4 cm (Fig. 1), and then tighten it gain.

4) In order to tension the track, connect the joint of grease gun (provided as a random tool) with the joint ② (Fig. 2). Then add oil by using a grease gun until

the branch amount f on the track is controlled at a deflection of 2-4 cm (Fig. 1).

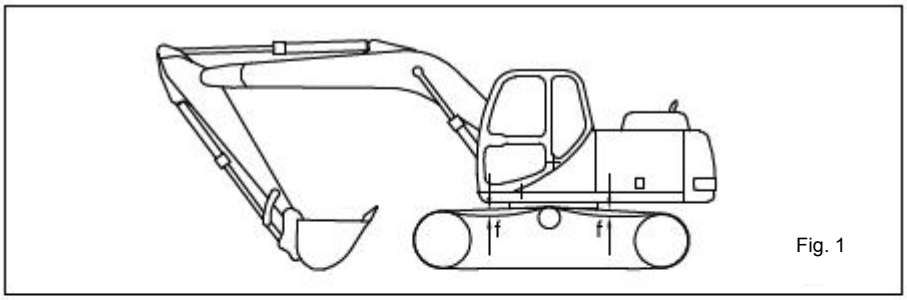

Fig. 1

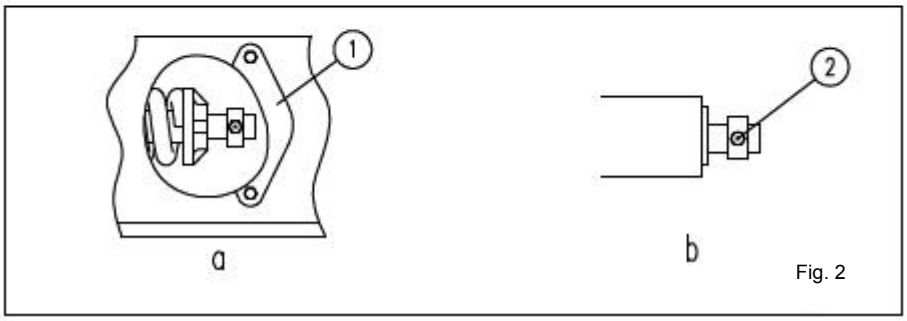

Fig. 2

Warning: Do not knock on the tension spring of the track. The spring will break explosively and cause personal injury due to the huge pressure. Do not disassemble the spring in a stretched state.

Thrust wheels, supporting wheels and guide wheels

1. Check the tightening torque of the thrust wheels

Perform the first inspection after new machine works for 50 hours and then every 500 hours.

If the bolts loose, unscrew the bolts, remove the thread locking agent between the bolt threads, and then apply the thread locking agent to the threaded joints and tighten them as per the specified torque.

If the bolts must be replaced, they shall be replaced with bolts of the same specification and strength class.

2. Check the oil level of the supporting wheels and guide wheels

Check every 1000 hours.

1) Take out the screw plugs ② and ③ respectively from the supporting wheel and guide wheel.
2) Fill the oil in with an oil pot.
3) If oil flows out from the oil filling hole, re-tighten the screw plugs ② and ③.

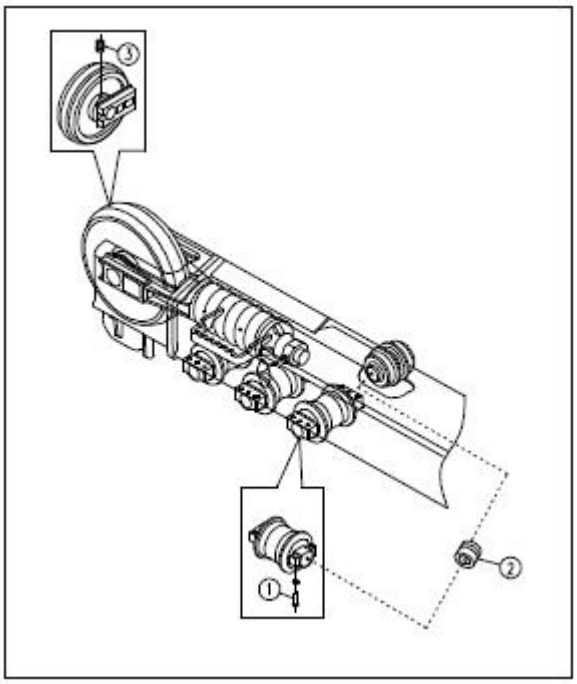

1. Thrust wheel bolt
2. Oil plug of the supporting wheel
3. Oil plug of guide wheel

Lubrication

Lubricate the lubrication points of the machine every 50 hours.

Lubrication steps:

1) Start the working device and put the bucket on the ground.
2) Put the bulldozer shovel on the ground.
3) Stop the engine.
4) Wipe up the filling nozzles of each oil cup.
5) Lubricate each lubrication point and wipe off excess grease squeezed out.

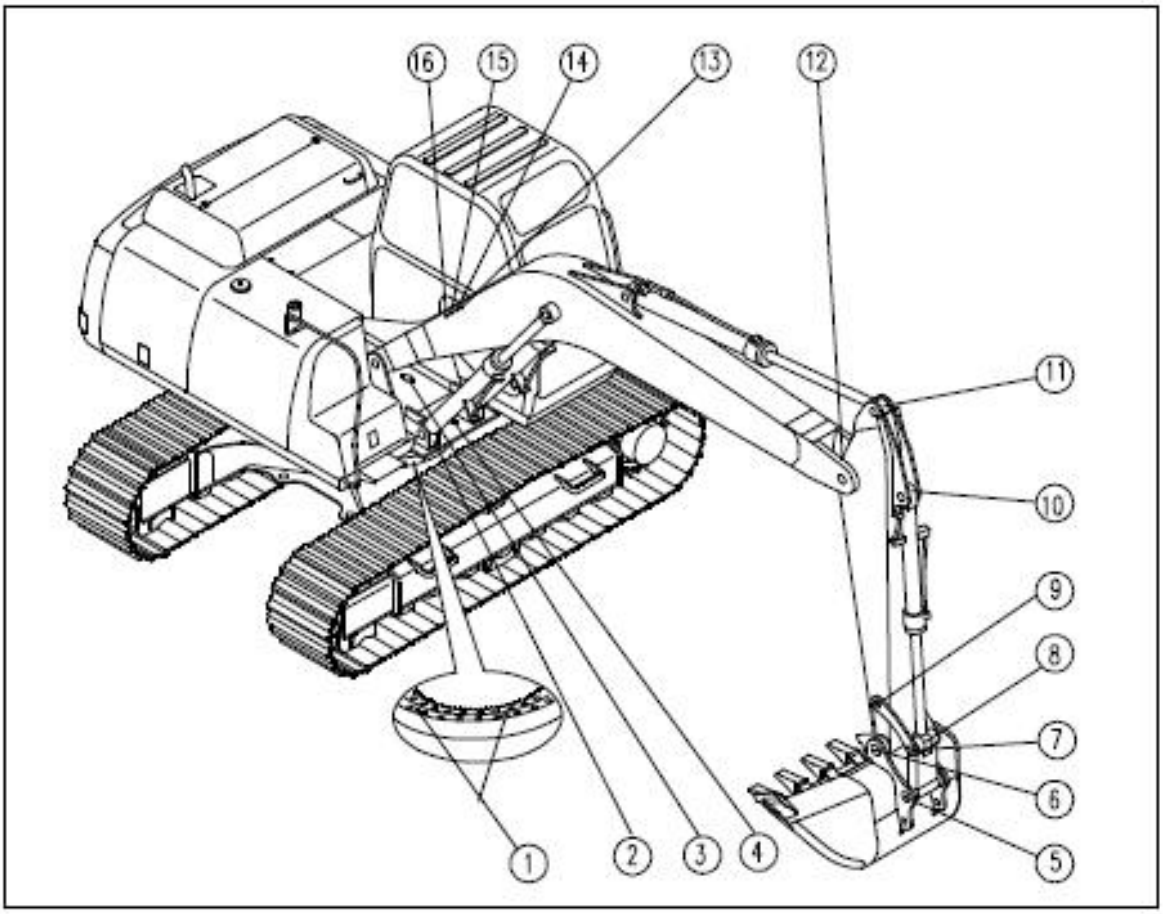

1. Lubrication points inside the rotary support raceway
2. Lubrication point at the tail of the boom cylinder
3. Lubrication point at the bearing of the rotary reducer
4. Lubrication point inside the rotary support inner gear ring
5. Hinge point between connecting rod and bucket
6. Hinge point between stick and bucket
7. Hinge point between rocker and connecting rod
8. Lubrication point at the bucket cylinder head
9. Hinge point between rocker and stick
10. Lubrication point at the tail of bucket cylinder
11. Lubrication point at the stick cylinder head
12. Hinge point between stick and boom
13. Lubrication point at the boom cylinder head.
14. Lubrication point at the tail of the stick cylinder
15. Hinge point between boom and platform
16. Hinge point between boom and platform

Note:
1) If there is abnormal noise in the lubrication area, the additional lubrication beyond the maintenance interval is required.
2) When operating the machine for the first 50 hours, lubricate it every 10 hours.
3) If the excavation operation is carried out in water, lubricate the pin immersed in water before and after the operation.
4) When carrying out heavy load operation or deep excavation, lubricate the mounting pins of the working device before each operation, and then operate the boom, stick, bucket and blade several times before applying grease. In addition, lubricate it every 10 hours.
5) Please fill molybdenum disulfide lithium grease (No. 3)

Air conditioning

For the air conditioning equipped for the cab of this machine, its operating knob is set on the left control box panel of the cab.

For the specific operation and maintenance of the air conditioning system, please refer to the operation manual of the air conditioner attached to the machine while referring to this manual.

1. Precautions for air conditioning maintenance

1) If the manipulator screen graphics flashes, the pressure of refrigeration system is faulty, the compressor cannot operate, and the system cannot cool. It should be repaired by a professional at this time.
2) If the machine shuts down automatically after startup (the manipulator screen lights up and then goes out automatically), or the screen graphics flashes (about 5 seconds), it means that an abnormal power outage is occurring or occurred when the machine was last started (for example, the switch was turned off without turning off the power switch of the air conditioning manipulator, the fuse was burned during the air conditioning was turned on, and the power line of air conditioning was poorly contacted). At this time, if the screen graphics can stop flashing 5 seconds after starting, you can continue to use the air conditioning; If the machine cannot be started or automatically stops after starting, check whether the power circuit of the air conditioner has power failure or poor contact.
3) In order to protect the compressor, the interval for starting the compressor twice is set to be about 15 seconds, so it is normal that the compressor will not operate if you select refrigeration less than 15 seconds from the last time you selected refrigeration. After the time interval reaches 15 seconds, the air conditioning system will automatically accept your cooling instructions.
4) The dust screen of the air conditioning box assembly must be cleaned regularly once a month, otherwise the dust and dirt will block the dust screen, making the indoor air cannot pass through the heat exchanger smoothly, affecting the air conditioning effect.
5) Under special conditions (such as humidity, the environment where is not too hot, use of external circulation air, low speed operation of blower, dust screen blocked by dirt, air return port blocked by foreign matters, etc.), the forced cooling is used for a long time, sometimes the air output is getting smaller and smaller, or even basically no wind, which means that the air-conditioned evaporator frosts. Frost on the evaporator surface blocks the air circulation channel, making the refrigeration effect very poor. However, this is not a fault. As long as the refrigeration is suspended at this time, the dirty blockage is removed, the strong wind is selected, and the refrigeration is turned on a few minutes later, the normal operation can be resumed. After returning to normal use, do not select the combined use mode of light air, forced cooling and external circulation at the same time. For example, the weak cooling or medium cooling can be used.
6) When using the heating system in winter, it should be used after the engine water temperature rises.
7) Because the heater core is connected with the engine water tank, the water tank will be short of water once the heater core leaks, causing the engine to overheat. In winter, it is very important to prevent the heating core from freezing and cracking, just as it is to prevent the water tank from freezing and cracking. In order to prevent the heating core or water tank from freezing and cracking due to the frozen coolant, please use the coolant designated by the OEM. If necessary, in winter when the coolant may freeze, drain the coolant if the shutdown time is long! Please note: If the heating core freezes and cracks in winter, it will not be within the scope of three guarantees. In addition, the heater core is corroded and leaked and the heater valve is damaged if you do not use the coolant specified by the OEM, which is not within the scope of three guarantees.
8) The skin and especially eyes can easily be frozen by refrigerant. In addition, the refrigerant will emit toxic phosgene when catching open fire. Therefore, whenever it is necessary to disassemble the refrigeration system, it is necessary to recover the refrigerant before disassembly in the condition that the refrigerant will not be sprayed on the skin and eyes. The whole process shall be free from open fire.

2. Inspection of refrigerant dosage

The skin and especially eyes can easily be frozen by refrigerant. In addition, the refrigerant will emit toxic phosgene when catching open fire. Therefore, whenever it is necessary to disassemble the refrigeration system, it is necessary to recover or discharge the refrigerant before disassembly in the condition that the refrigerant will not be sprayed on the skin and eyes. Make sure there is no open fire during the whole process!

If there is no refrigerant, the cooling performance will be poor. Check the refrigerant every month or every 250 hours. Operate the air conditioning to reach a strong cool state when the engine is idling at high speed. Determine the amount of refrigerant according to whether there are bubbles in the liquid sight glass on the drying bottle, in order to check the refrigerant dosage.

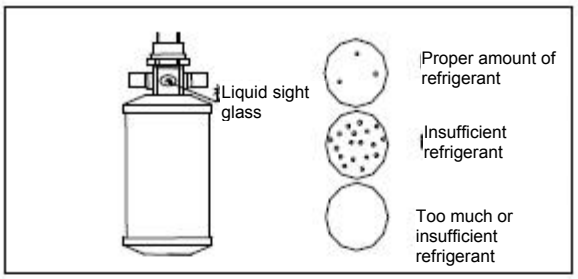

3. Check and adjust the tension of the air conditioning compressor belt

Check and adjust the tension of the air conditioning compressor belt every 250 hours.

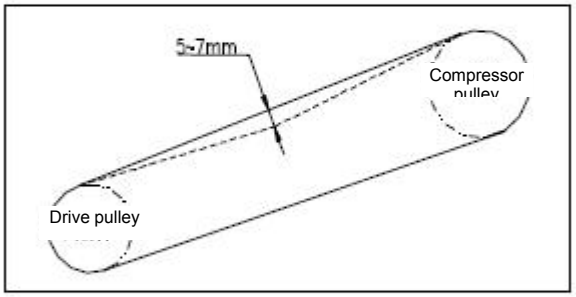

A. Inspection

Press the belt in the middle between the drive pulley and the compressor pulley with a finger force of about 12 N and check that its deflection is about 5-7 mm.

Check the pulley for damage. There is no adjustment allowance if the belt has been stretched, or replace the belt if there is a cut or crack on the belt.

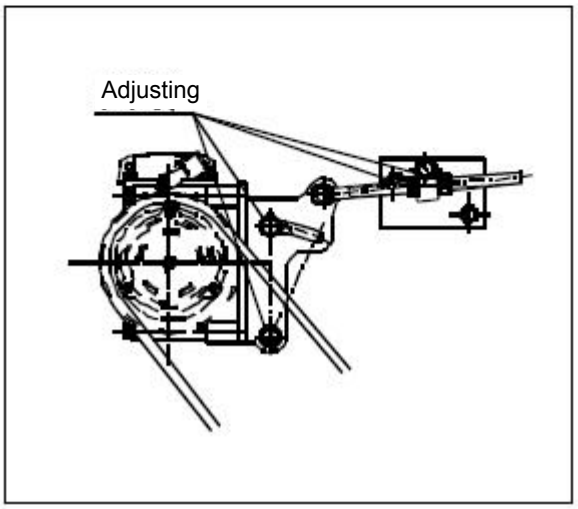

B. Adjustment

Loosen the adjusting bolt shown in the figure, and tighten the bolt after adjusting the bolt to make the belt properly tensioned.

Note: The adjustment methods for different models of air conditioning compressor belts may be different, and the specific model shall prevail.

4. Regular inspection contents of air conditioning

Serial number	Inspection items	Inspection contents	Inspection cycle	
			Every month	Every season
1	All fasteners	Whether there is looseness and falling off	★	
2	Air conditioning belt	Tension and wear	★	
3	Pipeline	Whether there is abrasion or crack	★	
4	Joint	Whether there is abrasion or leakage		★
5	Electric fan	Whether it operates normally	★	
6	Wire harness	Whether there is abrasion and burning	★	
7	Condenser	Whether the surface is blocked by dirt		★
8	Electromagnetic clutch (compressor)	Whether there is slipping	★	
9	Compressor	Whether there is abnormal noise		★
10	Refrigerant dosage	Whether there are bubbles in the liquid sight glass	★	
11	Dust screen	Whether there is blockage by dirt	★	

Bucket teeth replacement

Replace the bucket teeth before the bucket teeth base is worn.

Warning: When replacing the bucket teeth, it is very dangerous if the working device moves accidentally due to wrong operation. Therefore, before replacing the bucket teeth, put the working device in the locked state, then shut down the engine and lock all joysticks firmly. During replacement, wear necessary protective equipment to prevent the lock pin from flying out.

Replace the bucket teeth

1) Place the bottom of the bucket on blocks so that the pin can be removed.
Check that the working device is in a stable state and the bucket is placed horizontally.
Then, pull up the safety lock lever on the left control box to lock the whole machine and shut down the engine.

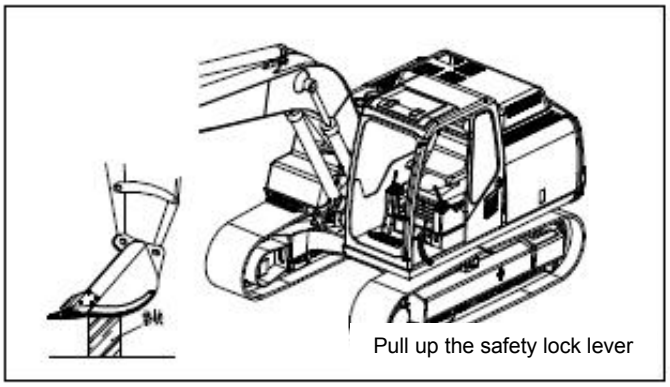

2) Place a metal bar with a diameter slightly smaller than the pin on the pin head, knock the metal bar with a hammer to knock out the pin and remove the bucket teeth.

3) Clean the mounting surface. Install the new bucket teeth into the teeth base, push in the pin partially by hand, and then knock the pin into the lock by using a hammer to install the bucket teeth onto the teeth base.

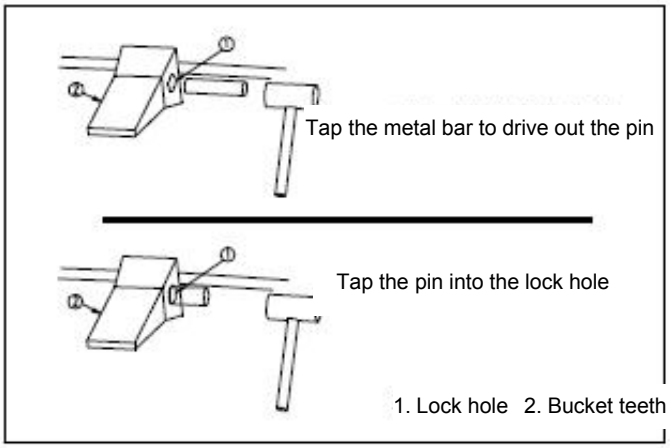

Washing of floor mats

If the floor rubber mats are dirty, clean them at any time to prevent accidents due to slipping and falling of the floor.

⚠	Warning: If you accidentally touch the joystick, the working device or machine will suddenly move, causing serious accidents. Therefore, be sure to stop the machine on a solid and flat ground before removing the floor rubber mat. The operator must lift the pilot safety handle and its upper control box to lock the pilot system before standing up from the seat.

Washing steps of floor mats

1) Take out the floor rubber mat in the cab.
2) Remove dirt with a brush or directly rinse the floor mat with water.
3) Clean the floor in the cab with a dry mop.
4) After the floor rubber mat is blown dry, recover the mats in the cab.

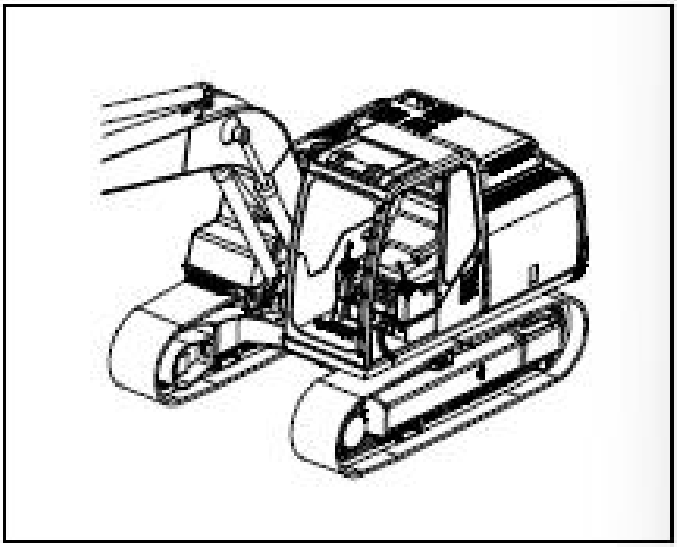

Maintenance of electrical system

The electrical aspect of the excavator is an important part, and the maintenance of the electrical system shall be carried out in strict accordance with the instruction. During inspecting and maintaining electrical components, be sure to turn off the power.

1. First, check whether the battery connector is loose, the battery is the main power source for the whole electrical system. Therefore, the battery connector must be tightened to ensure normal power supply.

2. Long-term use of the excavator must inevitably bring oil, dust and other impurities to the circuit, which is likely to cause short-circuit or circuit break or machine failure. Therefore, the circuit shall be checked every half month and the circuit and joints shall be wiped with a clean towel.

3. Check the appearance of the circuit. Check whether the circuit is broken, aging, etc. If so, invite an electrician with relevant experience to replace it.

4. Check whether the fuse of the working electrical appliance is effective. If the electrical appliance fails to work, first check whether the following fuses are burnt out. If so, replace fuses with new ones. Note that iron wires or other conductors shall never be used in place of the fuse.

5. If the electrical equipment is damp or the wire insulation is damaged, it is very dangerous, which will cause electric leakage and cause machine failure. Do not wash the inside of the cab with water. During flushing the machine, prevent the water from flowing into the electrical parts.

6. Do not install any electronic components other than those specified by Yuchai Heavy Industry.

7. External electrical interference may cause electrical system failures, so please contact Yuchai Heavy Industry dealers before installing radio receivers or other wireless devices.

8. During working on the beach, clean the electrical system carefully to prevent corrosion.

9. When installing the cab air cooler or other equipment, it shall be connected to a special power source. The selected power source shall not be connected to a fuse, start switch or relay.

6

Accessories guide

If you install accessories or options that are not approved by Yuchai, it will not only affect the service life of the machine, but also cause some safety problems.
During installing accessories that are not approved by Yuchai, please contact Yuchai dealer in advance.

If not, we will not be liable for any accidents or damages caused.

1. Safe operation accessories

The accessories are provided with powerful auxiliary functions. To prevent serious injury or damage, the accessories shall be used correctly.

● Do not use the accessories before reading and understanding the instruction thoroughly. If the instruction is lost, please ask the manufacturer or accessory sales company for a new one.
● Install the necessary front guard on the machine as per condition of the accessories.
● According to the condition of the accessories, vibration and noise can make it difficult for colleagues to convey operating instructions. Before starting the operation, a commander shall be assigned and the signal to be used shall be determined.
● If there is a heavy load on the accessories, do not make turning to the side, especially on slopes, it is very dangerous.
● Compared with a machine equipped with a bucket, the load at front of the working device is larger and is unstable for the machine equipped with a breaker hammer. To avoid the risk of tipping, do not operate if the accessory is turned to the side.
● After installing the accessories, the rotation range and the center of gravity of the machine are different, and the machine may move unexpectedly. Be sure to properly check the condition of the machine.
● Before starting operation, set a cordon around the machine to prevent personnel from entering. Do not operate the machine if there are people near the machine.
● To prevent serious accidents caused by wrong operation, do not put your feet on the pedals except operating the pedals.
● After installing the accessories, if the accessory is retracted toward the body, the accessory will interfere with the body. Be careful to handle the accessory.

2. Disassembly or assembly accessories

During accessories disassembly or assembly, be sure to follow the below steps to ensure safety.

● Disassembly and assembly on a firm and level ground.
● If there are two or more people performing operations, ensure and follow these signals during operation.
● A crane shall be used during lifting or carrying heavy objects (over 25Kg).
● During disassembling heavy parts, support the parts before disassembling. During lifting with a crane, pay special attention to the position of the center of gravity.
● It is dangerous to operate if the load is lifted by a crane. Prepare a support and keep it safe.
● During placing disassembled accessories or assembled accessories, make sure that they are in a stable state and will not tip over.
● Do not walk under the load lifted by the crane. Stand in a safe place where there is no danger even if the load falls.

⚠	Warning: A qualification certificate is required to operate a crane. Unqualified personnel are not allowed to operate the crane. For details on disassembly and assembly operations, please contact your Yuchai dealer.

Assembly/disassembly steps of accessories

1. Disassembly steps

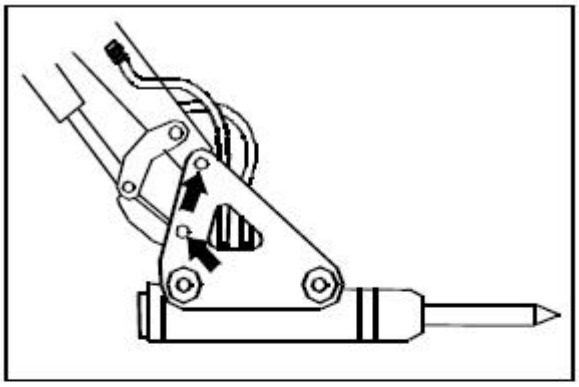

1) Put the accessories on the ground and turn off the engine.
2) Turn the start switch to the ON position and push the left control box to the free position.
3) Operate each working device joystick and accessory control pedal 2 to 3 times forward, backward, left and right in full stroke to eliminate the internal pressure in the hydraulic oil circuit.
4) After confirming that the oil temperature has decreased, lock the rotary valves connected to the inlet and outlet pipes on the stick side.
5) Remove the hose on the accessory side, put the plug on the combined washer and tighten it to the two outlets.
6) Remove the accessories by removing the pins (2 pcs). Then install the bucket.
7) Wrap the unconnected ends of the two rubber tubes of the hydraulic hammer with a clean plastic bag, and dust-proof measures shall be taken. Keep well the accessories.

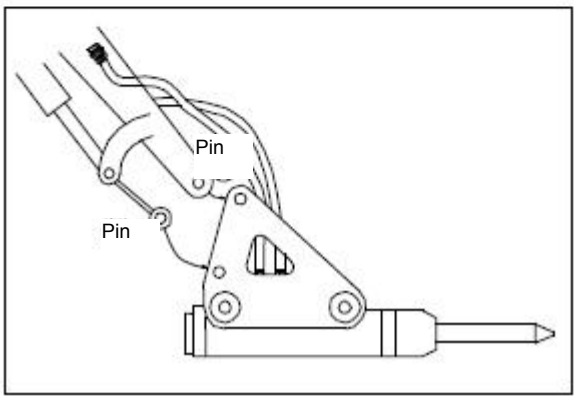

2. Assembly steps

1) Remove the bucket.
2) Put the accessory on a flat place, and connect the stick and the hydraulic hammer and the connecting rod and the hydraulic hammer with pin A and pin B in turn.
3) After confirming that the oil temperature has decreased, remove the plugs from the outlet and inlet respectively. Be careful to prevent dust, dirt, etc. from sticking to the hose port.
If the combination gasket is damaged, replace it with a new one.
4) Connect the hose on the accessory side. During connecting, check the flow direction of the oil, and be careful not to make a wrong connection.
5) Unlock the rotary valves connected to the inlet and outlet pipes on the stick side.
6) After installing the accessories, confirm whether the oil level in the hydraulic oil tank is proper.

This section introduces the precautions that shall be observed for operating hydraulic excavators equipped with accessories.

Note: Select the most suitable accessory for the main engine. The models of machines that can install accessories are different. For the selection of accessories and machine models, please contact your Yuchai dealer.

Hydraulic breaker hammer

1. Guidelines for the use of hydraulic breaker hammer

Hydraulic breaker hammer is the most common work accessory. It is widely used in the demolition of buildings, road cracking, tunnel operations, steel slag and stones crushing, and crushing operations in quarries.

1) During crushing operations, please make sure that the direction of the apex of the hammer drill rod is perpendicular to the surface of the broken object, and keep it as long as possible. If it is inclined to the surface of the broken object, the drill rod may slip off the surface, which may damage the drill rod and affect the piston.

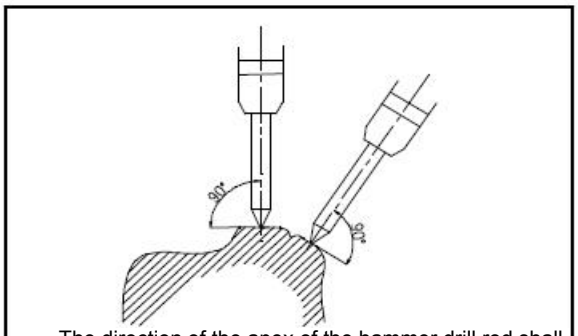

The direction of the apex of the hammer drill rod shall be perpendicular to the surface of the broken object

During crushing, please select the appropriate hitting point, and confirm that the drill rod is indeed stable before hitting.

It is required to keep adjusting the bucket cylinder during operation to keep the penetration direction of the drill rod and the direction of the breaker hammer body in a straight line.

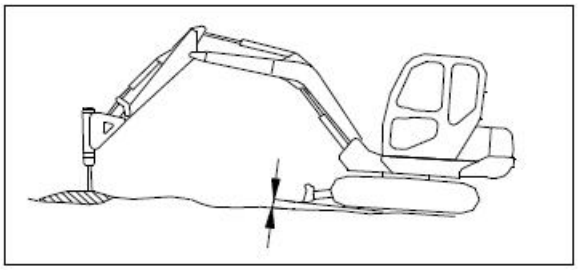

2) During impacting, press the drill rod onto the impact surface to make the chassis is about 5 cm off the ground, and the machine shall not be away from the ground too much.

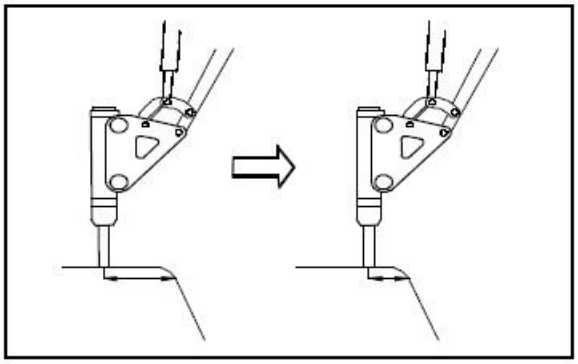

3) During continuous impacting to the same impact surface, if the drill rod cannot penetrate or break the surface within 1 minute, change the impact position to break it near the edge.

4) Make sure that the drill rod always impact the surface properly to prevent the impact force from being used if there is no resistance.

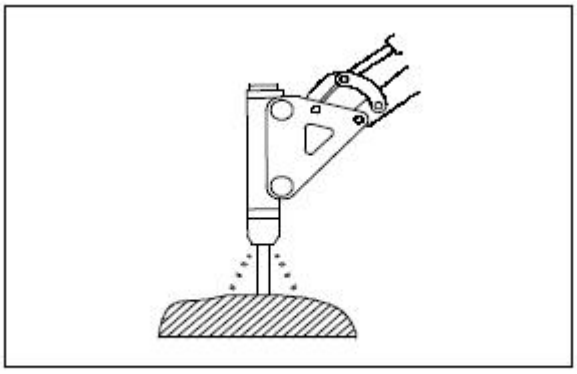

If the rock or the target has been crushed, stop the action of the breaker hammer immediately. The continuous aimless impacting will cause the front part and the main bolts to loosen and damage, and even damage the excavator itself.

Aimless impacting comes from improper insertion and shaking during use of the breaking hammer.

2. Operation taboos for hydraulic breaker hammer

In order to ensure longer service life and safe operation, do not operate the machine in any of the following:

Note: Do not operate all cylinders to the end of the cylinder stroke, and always leave a margin of about 5 cm.

1) Push heavy objects or large rocks with the breaker hammer.

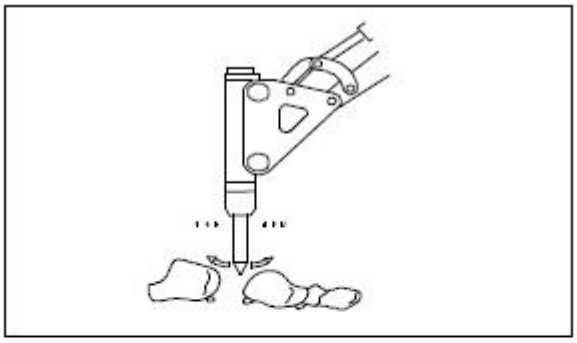

2) Operate with turning force.

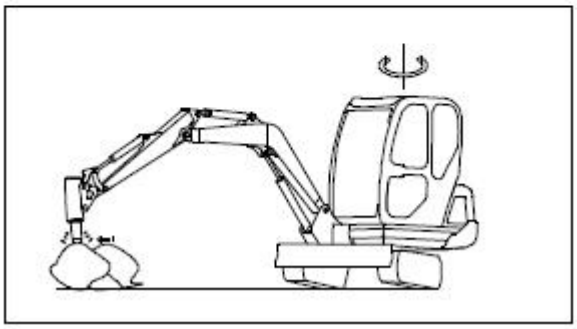

3) The drill rod is moved during impact operation.

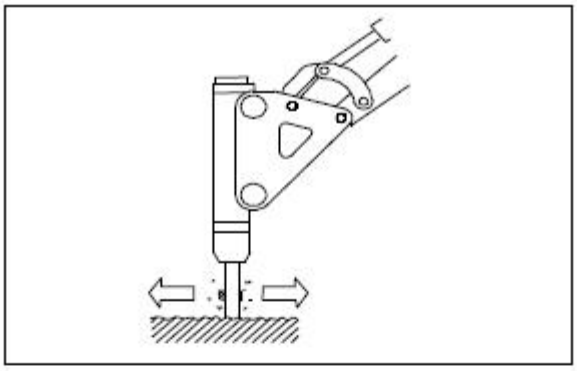

4) Apply impact force horizontally or upward

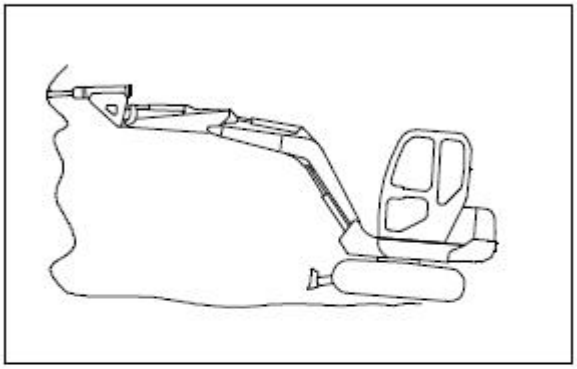

5) Swing the breaker hammer after it has penetrated the rock

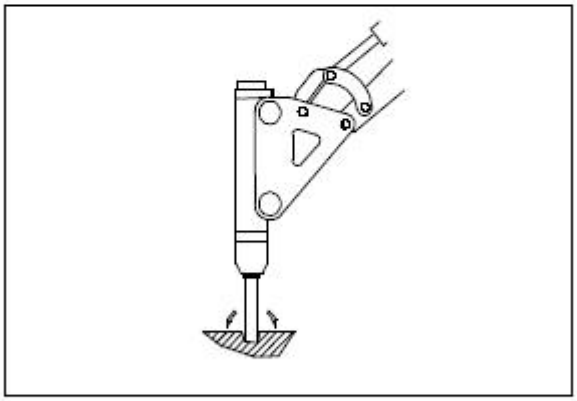

6) Pecking operation

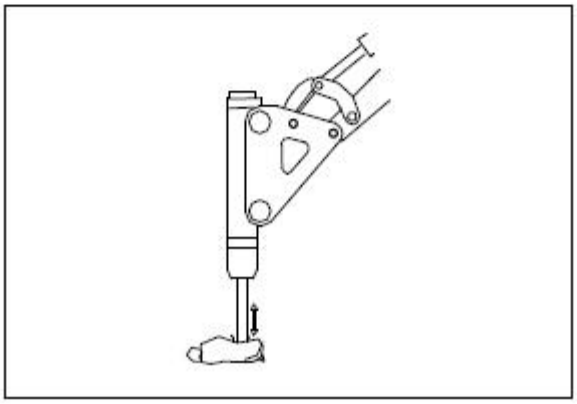

7) Carry out crushing operations in water or muddy ground

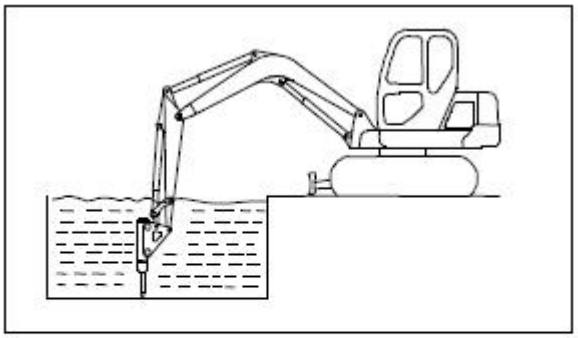

8) Use the breaker hammer as a tool for lifting heavy objects.

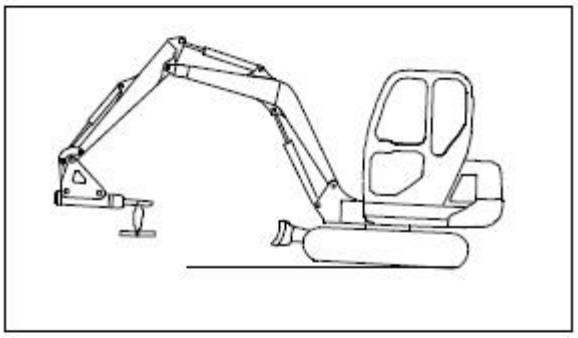

9) The bucket cylinder is fully extended to lift the machine off the ground.

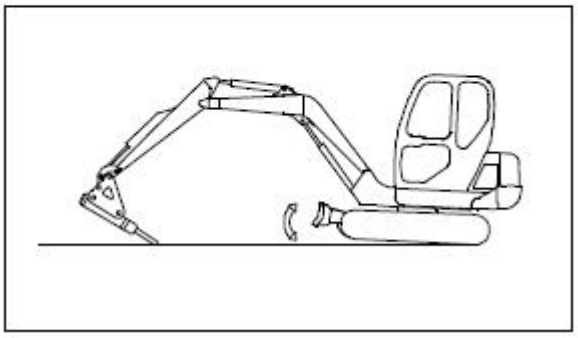

Quick coupler

1. Bucket installation

1) Pry up ① with a crowbar.

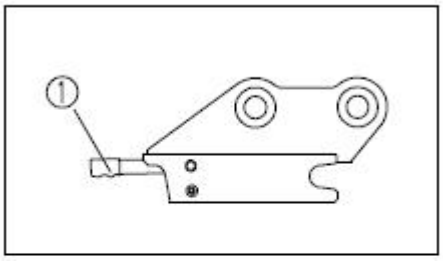

2) Put the bucket pin into ②③, put down the crowbar, and the bucket is installed.

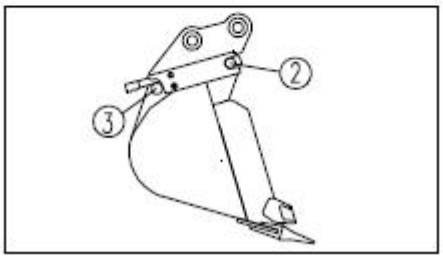

2. Unloading the bucket

1) Pry up ① with a crowbar.
2) Unload the bucket.

Daily inspection of hydraulic breaker hammer

Carry out the daily inspection and maintenance of the hydraulic breaker hammer according to the following table.

Serial number	Inspection or maintenance items	Check points	Maintenance method
1	Check whether the bolts and nuts are loose or missing	Body bolts and side plate bolts	Tighten the bolts or reinstall new bolts
2	Check the hose parts for looseness, hose damage or oil leakage	Breaker hammer hydraulic pipeline High pressure tubing	Re-tighten the loose part and replace the severely damaged part
3	Lubrication 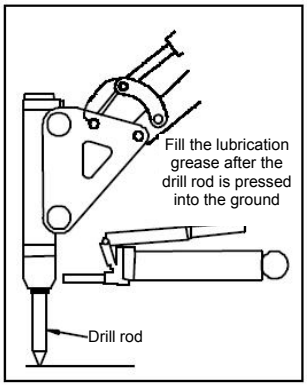 	Lubrication shall be carried out with lubricating oil before operation and after each continuous operation for 2 to 3 hours. Lubricating oil shall be filled at 5-10 times for each lubrication.	Fill the lubricating oil from the lubricating oil filling hole at front of the breaker hammer
4	Check the capacity and pollution of hydraulic oil	Condition of hydraulic oil	The hydraulic oil quality changes due to different working environments. The simple way to judge the quality of the oil is to observe whether the color of the oil changes. If the oil quality deteriorates seriously, please drain the hydraulic oil in the hydraulic oil tank and clean the oil tank before filling new hydraulic oil.

YUCHAI
YUCHAI EQUIPMENT

广西玉柴装备科技有限公司

GUANGXI YUCHAI EQUIPMENT TECHNOLOGY COMPANY LIMITED

Add: Yuchai Engineering Machinery Industry Center,

Luchuan, Yulin, Guangxi, China

Tel: 0086-775-3223503

Web: www.yuchaicm.com