YUCHAI
YUCHAI EQUIPMENT

U60 Hydraulic Excavator User Manual

广西玉柴装备科技有限公司

Guangxi Yuchai Equipment Technology Co., Ltd.

⚠ Warn

Improper operation of this machine may cause injury or death. Before using this machine, please do the following:

● Remember the safety regulations and correct usage specifications of this machine.

●Read and understand the instructions regarding safe operation of the machine.

●Understand and be familiar with all safety signs on the machine.

●Ask irrelevant personnel to leave the workplace.

●Before officially operating the machine at the workplace, safe operation training of the machine should have been carried out in advance.

You are responsible for complying with relevant laws and regulations and following Yuchai Equipment's instructions on machine operation and maintenance.

YUCHAI

YUGHAI is a registered trademark of Guangxi Yuchai Equipment Technology Co., Ltd.

Content

Preface **1**
To The User 2
Product Information 3
Machine Profile 4
Overall Machine Orientation 5
Machine Components 6
Technical Specification 7
Safety regulations **11**
General Safety Guidelines 12
Safety Tips 13
Safety Signage 15
Safety at the Work Site 25
Safe Operation 26
Transporting and loading/unloading the machine. 38
Shutdown and Maintenance 39
Fire prevention, explosion prevention, and poisoning prevention 40
Battery 41
Hydraulic System 42
Introduction to Components **44**
Overview of Control Devices 45
Digital Combination Instrument 46
Right Control Box Panel Switch Group 52
Left Control Box Panel Switch Group. 54
Operation of the Working Device and Rotation Mechanism 56
Mechanical throttle and electronic throttle 59
Driver's Seat 60
Air Conditioning Control 62
Radio 68
Door and Window 71
Operational Guidelines. **72**
Preparation Before Operating the Machine. 73
Engine Operation 74
Entering and Exiting the Machine 78
Movement of the machine 79
Machine Steering. 81
Rotation of the machine. 82
Operation of the working device. 83
Working on slopes or in water. 85
Avoid muddy environments 86
Guidelines for Construction Operations. 87
Park the machine. 92
After Operation 94
Loading and unloading of the machine and transport. 95
Operation in cold or hot climates 99
Storage of the Machine 100
Technical Fault Causes and Solutions 102
Maintenance and Care **110**
Knowledge of Maintenance and Care 111

Maintenance Overview 113
Easily Worn Components 115
Mandatory Replacement Components 116
Fuel Selection Table 117
Tightening Torque 118
Regular Inspection and Maintenance Schedule 121
Regular maintenance inspection schedule (continued). 122
Routine Inspections 123
Engine Fuel System. 124
Engine cooling system. 129
Engine intake system. 135
Additional Engine Maintenance 136
Hydraulic System 137
Battery 143
Reducer 145
Track 147
Support roller, carrier roller, and guide roller 148
Lubrication 149
Air Conditioning 150
Replacement of bucket teeth. 154
Washing the floor mat. 155
Maintenance of the Electrical System. 156
Attachment Guidelines. 157
Safety Considerations. 158
Procedures for installing and removing attachments. 160
Attachment Operation Guide. 162
Quick Coupler 166
Daily Inspection of the Hydraulic Breaker 167

1
Preface

To The User

Dear users:

Welcome to use Yuchai's excavators and thank you for your strong support for Yuchai's business.

This manual is mainly for the mining The driver of the machine and dimension build personnel make Use. see you exist Hold Work, maintain Protection Save keep machine Device Before, Read this instruction manual and strictly follow the safety regulations, usage methods, lubrication and regular maintenance as specified in this instruction manual. Correctly mastering the use method and regularly performing maintenance and care are the key to the reliable operation of the machine, the extension of its life and the maximum efficiency of its operation. Necessary guarantee of rate.

Please entrust our repair station or agency to overhaul and adjust the machine, and use genuine parts provided by our company. If you use non-genuine accessories or parts, it may not have a noticeable effect on the machine at the time, but it may cause problems in the future. If it is caused by using non-genuine accessories or parts or repairing by an institution not authorized by our company, For machine failures caused by overhaul, Yuchai Equipment will not be responsible for the three-guarantee warranty even within the three-guarantee period .

Yuchai Equipment " use household to superior ” The original Then, constantly Land reform Enter Products, to provide the best products possible supply use For Such improvements may be implemented at any time. We will not change the information of products currently on sale without prior notice.

We sincerely hope that this machine can serve you better and create greater value under your correct use and careful care.

Guangxi Yuchai Equipment
Technology Co., Ltd.

Product Information

When you need to know the basic information of the machine, you can check it by clicking the illustrated location.

Complete machine information (the complete machine nameplate is located on the left front side of the platform)

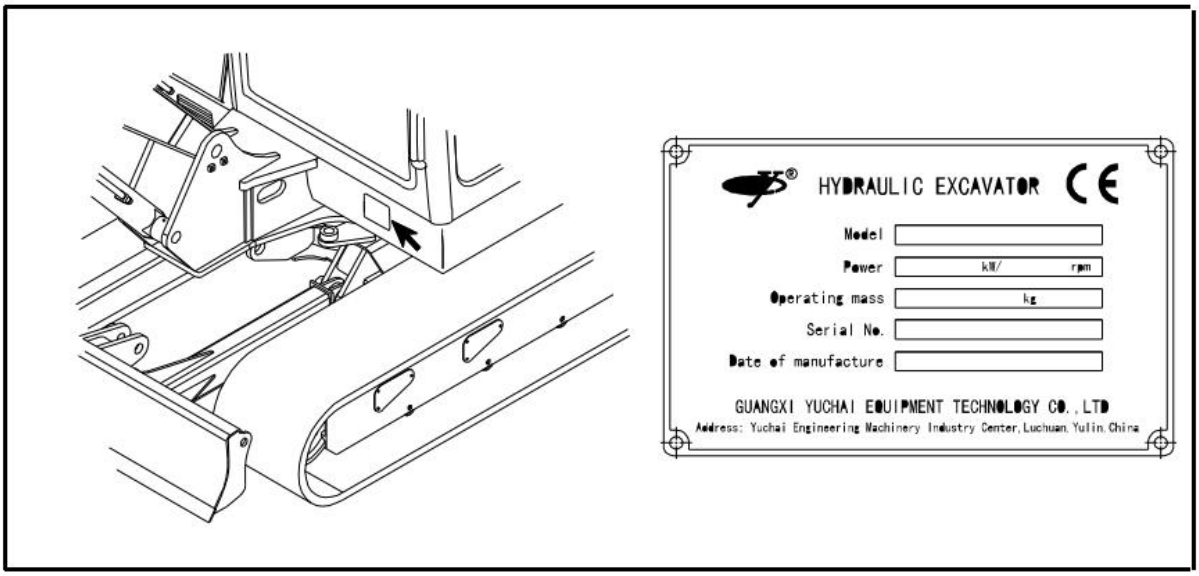

Engine information (engine nameplate is located as shown in the figure)

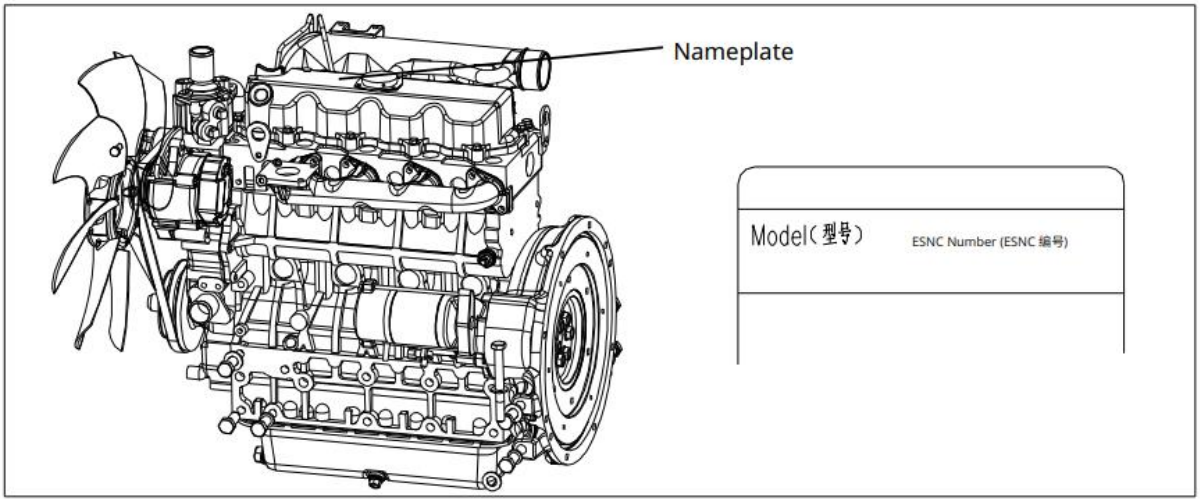

Machine operation information (engine timer is located on the digital instrument cluster in the machine cab)

Machine Profile

Fill in the following table with your machine serial number and engine serial number. When obtaining relevant information, these codes can be informed to Yuchai. Please write down these numbers and keep them with the product certificate. If your machine is stolen, you can submit these documents to the local public security organs.

●Machine model_____

●Product serial number_____

●Engine serial number_____

●Dealer information_____

_____

_____

Overall Machine Orientation

The front, back, left, right, up, and down in this manual refer to the directions of the illustrated state.

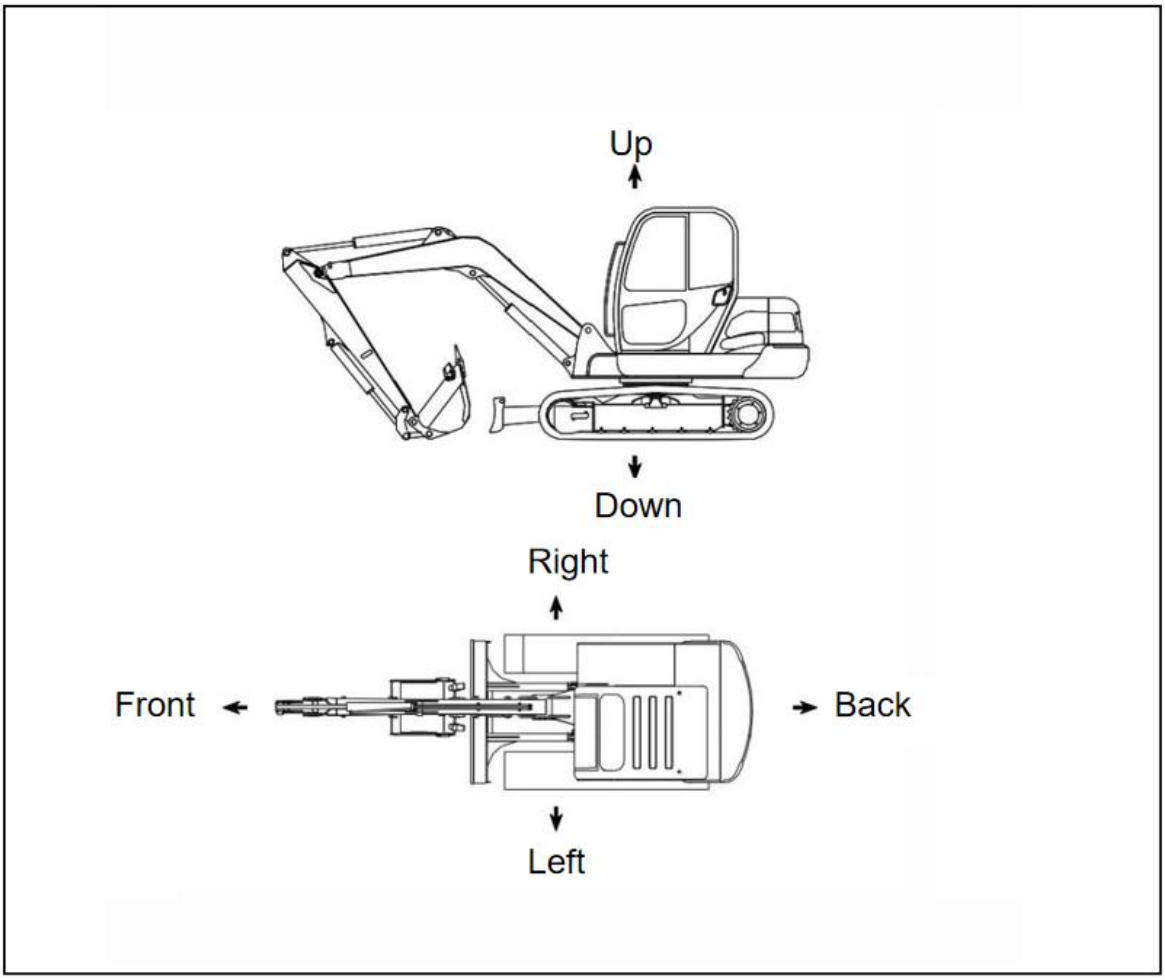

Machine Components

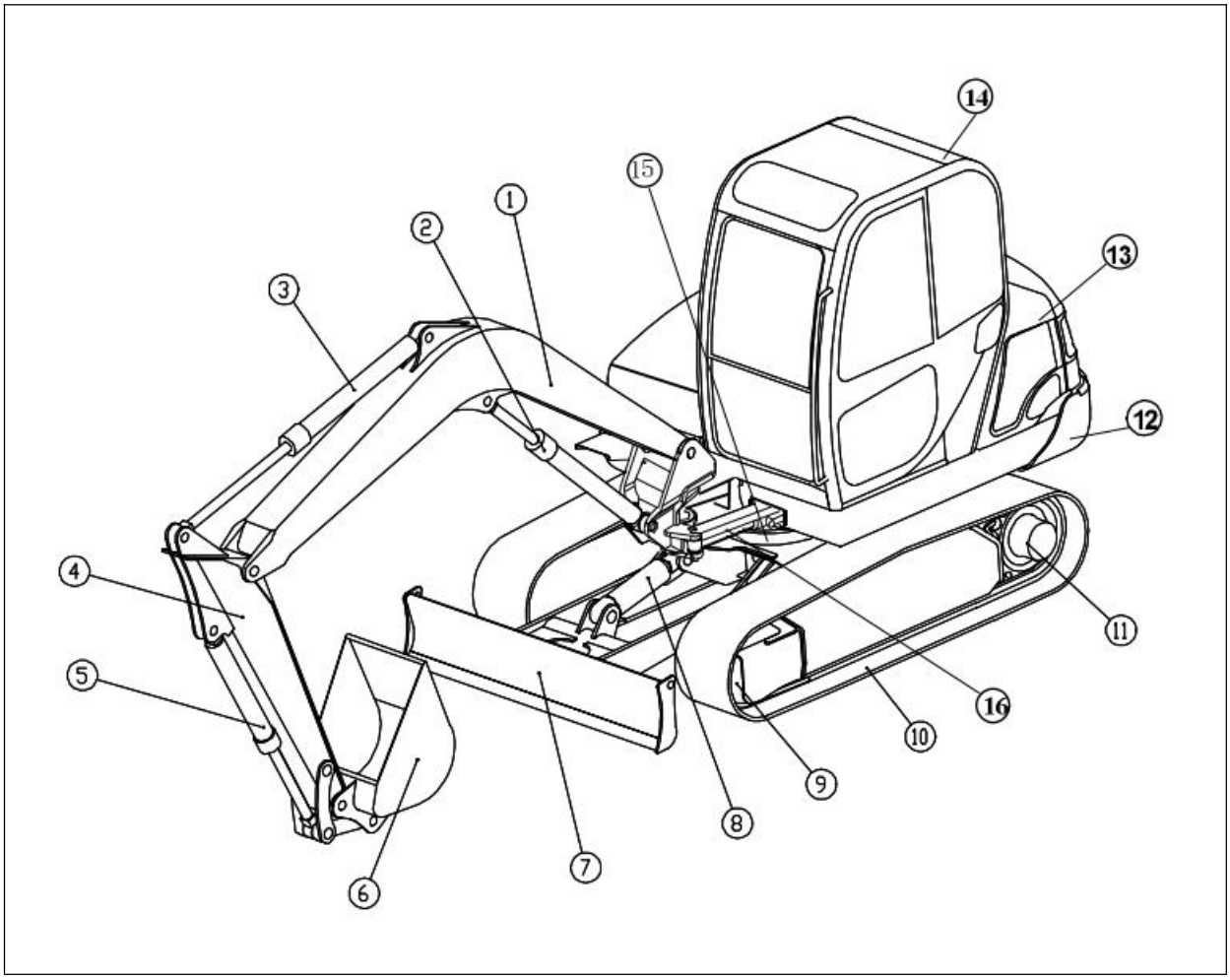

1. Boom	2. Boom cylinder	3. Arm cylinder	4. Stick	5. Bucket cylinder	6. Bucket	7. Bulldozer	8. Bulldozer cylinder
9. Guide wheel	10. Tracks	11. Travel motor	12. Platform	13. Cover	14. Cab	15. Frame	16. Deflection cylinder

Technical Specification

1. Knot Structure ruler inch Ginseng number				
Code	project	unit	U60	
	Operating Weight	kg	5600	
	Standard bucket capacity	m³	0.18	
	Engine Name		V2607	V2403
	Engine power	kw/rpm	35/2200	30.7/2200
A	Transport length	mm	5545	
B	Transport width	mm	1960	
C	Transport height	mm	2550	
D	Platform width	mm	1845	
E	Boom height	mm	2070	
F	Platform height from ground	mm	625	
G	Chassis ground clearance	mm	310	
H	Platform tail turning radius	mm	1065	
I	Track width	mm	3560	
"	Track length	mm	2500	
N	Track width	mm	400	
HH	Right deflection angle	o	53	
Ⅱ	Left deflection angle	0	70	
	Travel speed (low/high)	km/h	2.2/3.6	
	Platform rotation speed	rpm	8-10	
	Cab		•	

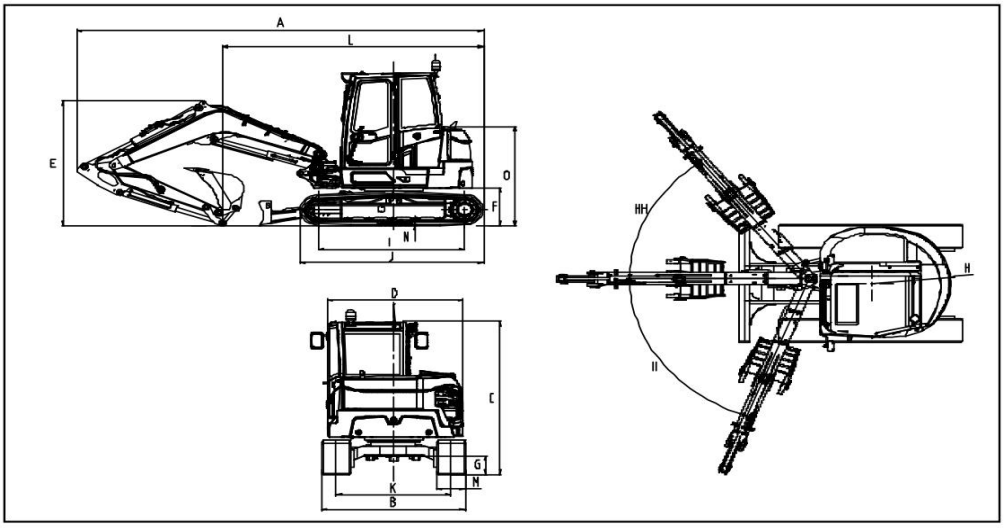

Note: The structural parameters listed above are nominal values and may change without prior notice from the manufacture.

2. Working parameters

Code	Item	Unit	U60
AA	Maximum Digging Height	mm	5670
BB	Maximum Unloading Height	mm	4015
CC	Maximum Digging Depth	mm	3635
DD	Maximum Vertical Digging Depth	mm	2985
EE	Minimum Turning Radius of the	mm	2550
FF	Maximum Ground Digging Radius	mm	6055
GG	Maximum Digging Radius	mm	6190
P	Maximum Push Height of the	mm	440
Q	Maximum Push Depth of the Bulldozer Blade	mm	405
R	Distance from the Bulldozer Blade to the Rotation Center	mm	18
	Maximum Digging Force of the	kN	45
	Maximum Digging Force of the Arm	kN	26

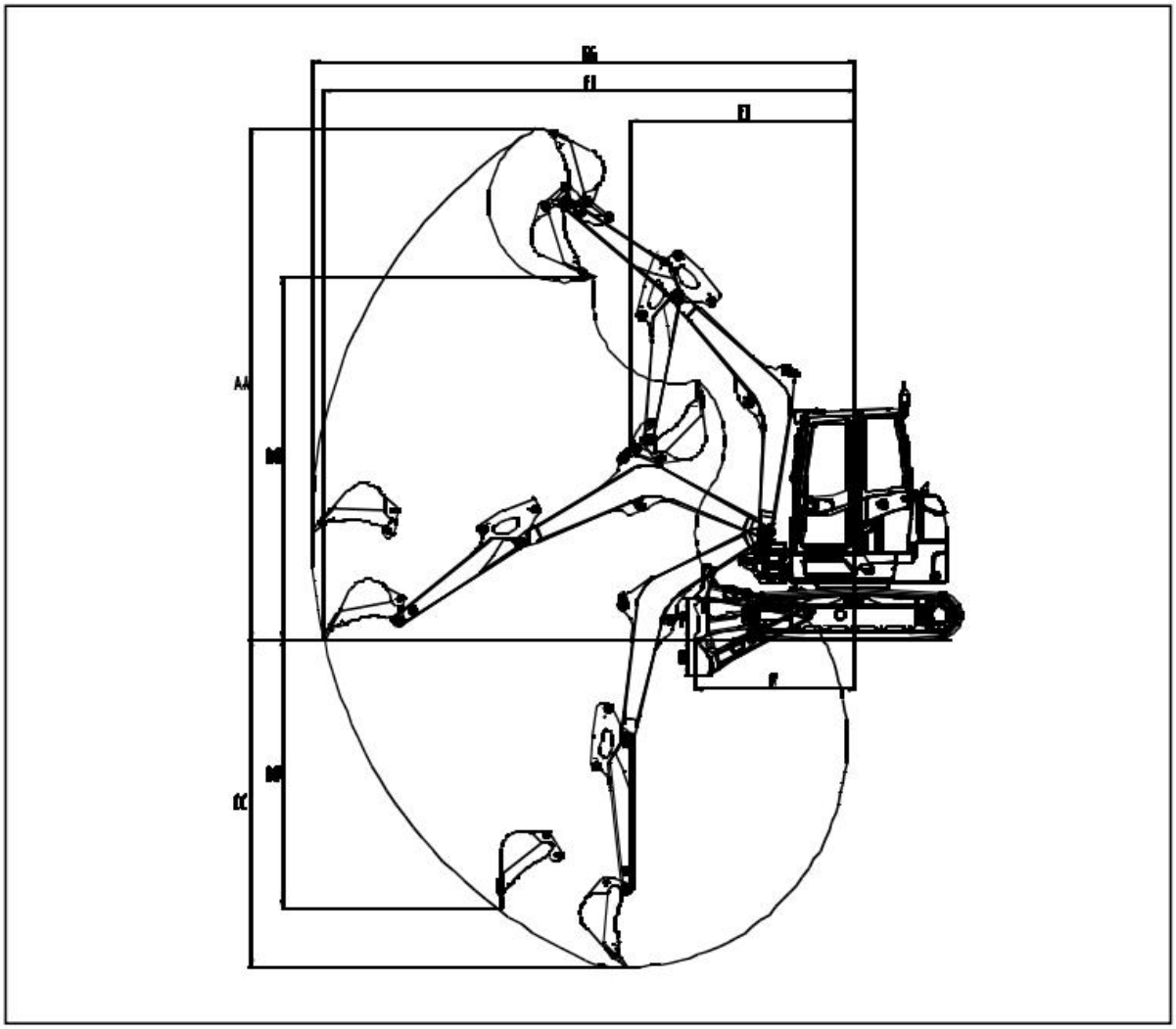

Note: The manufacturer will not provide prior notification of any changes.

5.Walking mechanism

It is independently driven by a hydraulic motor through a multi-stage planetary reducer. The reducer is built into the width of the track.

	Walking speed (km /h)	**Maximum traction force (kN)**	**Gradeability**
High speed	**3.6**	**31.3**	**70%(35°)**
Low speed	**2.2**	**53.8**	

6. Hydraulic system

Load-Sensitive System

Pressure: 27.5 MPa

Oil return filter: filtration accuracy 10 microns

Oil suction filter: Metal type

7. Electrical system

Voltage: 12 V

Battery: 80 Ah

8. Usage Environment

Ambient temperature: -15~40℃

Ambient humidity: <85%

Altitude: When using a supercharged diesel engine, it can be used normally at altitudes below 2000 meters . When it is above 2000 meters, please use it as a diesel engine. The manual corrected the diesel engine output power; when using a non-supercharged engine, it can be used normally at altitudes below 500 meters, and at an altitude of 500 meters For altitudes above 1000 meters, please correct the diesel engine output power according to the diesel engine manual.

Transport and storage temperature: -15 ~ 40℃

9. Interference of the fuselage

When the working devices of various series of excavators are equipped with certain non-standard working devices (or working device accessories), they may interfere with the boom cylinder or boom. There may be interference between the arm cover, cab, cab guard net, platform, frame, bulldozer, etc., so when the machine is equipped with non-standard working equipment When positioning, pay attention to the angle between the boom and the dipper arm when retracting to prevent interference with the fuselage and damage to the fuselage.

The following are all non-standard auxiliary working devices provided by our company:

Fighting	Bucket attachments mounted directly on the stick
	Bucket accessories for use with quick-change couplings
	Bucket attachments for use with quick-change devices
Breaker	Hammer mounted directly on the boom
	Breaker hammer for use with quick-change device
Drilling tools	Drilling device mounted directly on the stick
	Drilling tools for use with quick-change devices
Grab	Grab bucket mounted directly on the arm

If the model you purchased has any of the above configurations, you need to pay attention to the above-mentioned issues.

2
Safety regulations

General Safety Guidelines

Complying with the relevant safety regulations in this manual can avoid most accidents in machine operation and maintenance. Before you operate or repair the machine, you should Read and understand all safety information in this book and the safety diagrams on the machine.

The safety contents in this manual point out the possible situations that may occur during the normal operation and maintenance of the machine and give the following instructions: Possible ways to deal with these situations.

The relevant safety information can be found in each chapter of this manual and the contents of this chapter constitute comprehensive guidance on the safety of this manual.

This manual and the safety information on the machine do not include all potential hazards and possible countermeasures. When a method or action is recommended or permitted, it is your responsibility to take the necessary steps to ensure safety.

In no case may any use or operation prohibited by this manual be performed.

This excavator should be operated and maintained by trained and qualified personnel.

Before starting work, check all the functions of the machine. If any abnormality is found, stop the machine immediately to find out the cause and eliminate the fault before continuing work.

The inspection, maintenance and care shall be strictly carried out in accordance with the provisions of this manual, and the operator shall follow the operating methods and safety Work and operate within the prescribed working range of the machine.

If you are under the influence of alcohol or drugs, please do not operate or maintain the machine as this may cause harm to you and others around you.

It is necessary to understand the content of the relevant signals and gestures.

When driving on the road, you must be familiar with the relevant laws and regulations of the country or region and strictly abide by them.

Safety Tips

1. Warning signs

In this manual, this warning symbol indicates important safety information. When you see this sign, you should carefully read the information and warnings following the sign to avoid possible injuries or deaths.

2. Safety Tips

This manual provides precautions, signs and potential hazards for safe use of the machine. Please read this manual and the safety signs on the machine carefully before use and follow the relevant procedures.

The safety warnings of this machine are marked with words such as “Danger”, “Warning” or “Attention” . The following are their corresponding explanations:

⚠ DANGER: indicates that if not avoided, the consequences of the hazard will result in death or serious injury . It is only applicable to a small number of cases with the most serious dangers. field combines .

⚠ WARNING: Indicates a potentially hazardous situation which, if not avoided, could result in death or serious injury.

⚠ CAUTION: indicates that the consequences of a potential hazard, if not avoided, may result in minor or moderate injuries. It can also be used to indicate possible Unsafe operation resulting in personal injury.

Safety Equipment

1. Protective equipment for operators

1) Operators must wear tight and suitable clothing before operation or maintenance. Work clothes, helmets, work shoes and other related safety protection Supplies (such as protective earplugs, gloves, protective glasses, safety belts wait).

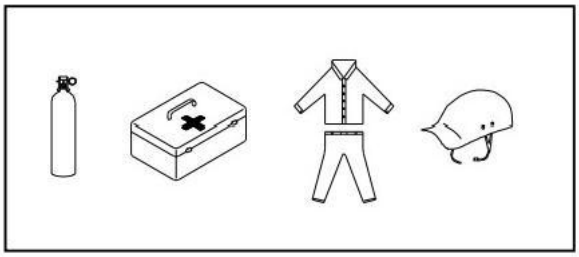

2) If the operator's hair is too long, please tie it up and Cover with a safety cap, this will protect your hair from getting tangled in the machine live.

3) The user must configure emergency medicine in the machine and perform regular Check and add medicine if necessary so that it can be used in emergency.

5) Please be sure to check the function of all protective equipment before operation or maintenance. Is it normal?

2. Escape hammer and fire extinguisher

The emergency escape hammer is installed on the left door pillar of the cab.
When you are trapped in the cab and unable to enter or exit normally, and you need to escape from the cab, use the pointed cone of the emergency escape hammer to strike the glass forcefully until the glass is shattered. Please pay attention to the protection of your eyes and face when striking the glass.
The user shall equip a fire extinguisher by themselves.
There is a reserved installation slot for the fire extinguisher on the pillar at the left rear of the cab.
Please read the usage instructions on the fire extinguisher carefully and use it strictly in accordance with the instructions.
Check and maintain fire extinguishers regularly.
If any part of the TOPS (rollover protective structure) of the cab
In case of plastic deformation or fracture, please contact the OEM for repair. or replace.

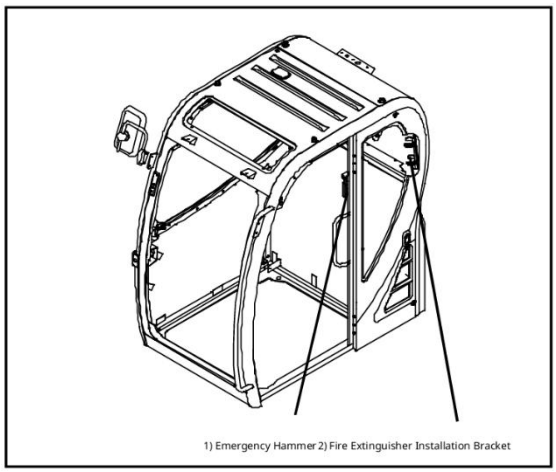

Safety Signage

Warning: Failure to understand the safety signs or the signs are missing may result in death or injury. Please replace any missing signs in a timely manner. Remove lost or damaged signs and keep all safety sign surfaces clean and legible.

Before operating, maintaining or repairing the machine, you must carefully read the instruction manual and warning signs attached to the machine and make sure you fully understand their contents. And follow the relevant procedures.
Check the markings before starting the machine every day. Clean them if they are not clear.
When cleaning the logo, only cotton cloth, water and soap can be used. Organic solvents and gasoline cannot be used, as these can easily cause the logo to fall off.
If the label is damaged, missing or illegible, it must be replaced. If the label is located on the part that needs to be replaced , make sure to match the label on the new part.
Please contact your Yuchai dealer to obtain new safety labels.

1. Safety sign classification

Safety signs are shown in this manual and on the machine in the form of "pictorial safety signs" and "illustrative safety signs".

A. Pictorial safety signs

This type of safety sign uses graphics to represent safety warning information. Easy to understand and clear at a glance.

B. Graphic safety signs

This safety sign is equipped with a picture And corresponding explanatory text . Where graphics cannot adequately convey safety information, text is needed. Combine the words to explain.

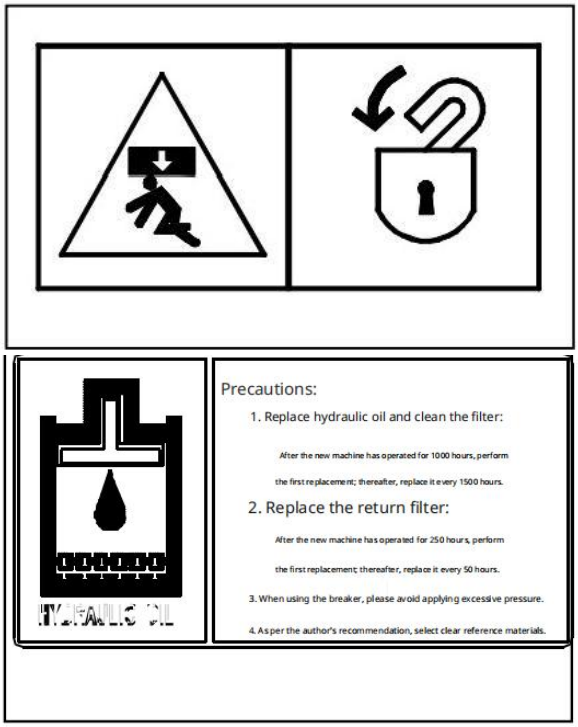

2. Safety logo affixed location

The logo shown in the figure is only the “safety logo” part of all logos. The other functional logos are introduced in the following chapters.

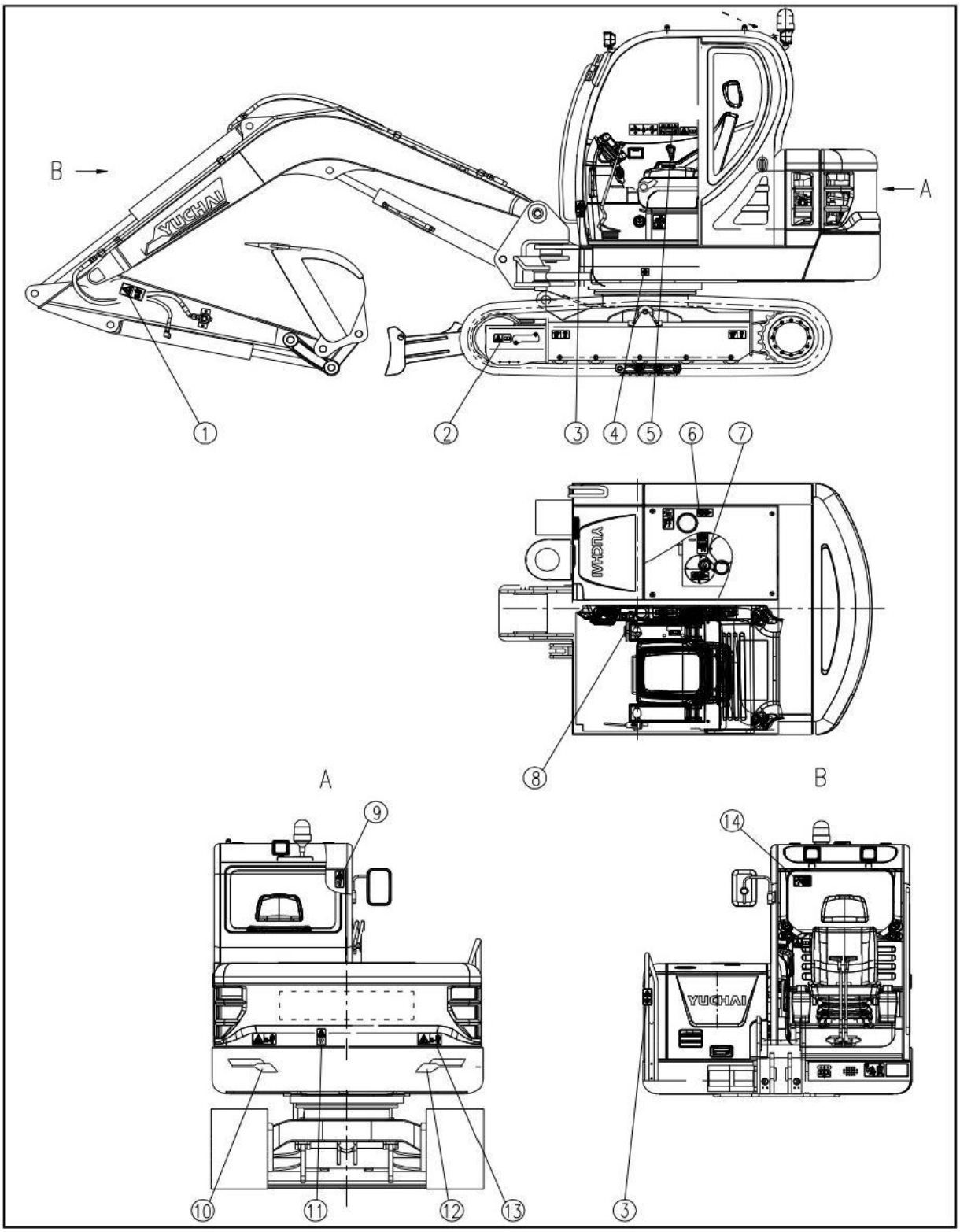

3. Safety labels and other markings

1) Pay attention to and stay away from working devices

2) Please pay attention to safety when getting on and off the machine

3) Read the instruction manual carefully

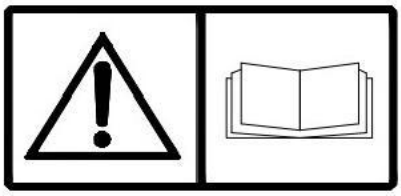

4) Lock mark

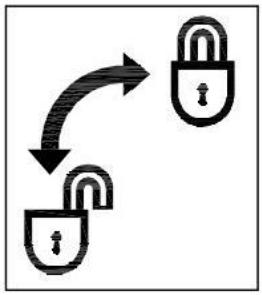

5) Identification for lubricating grease filling

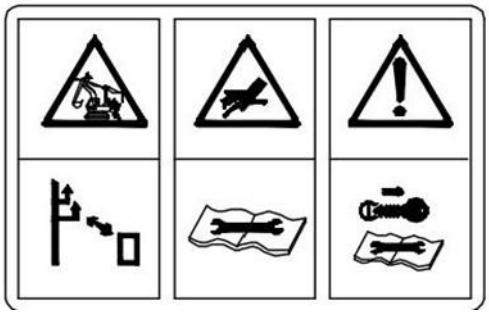

6) Safety information to be paid attention to during operation and maintenance when getting on or off the bus, move slowly, hold the handrails on both sides, and face the machine, device, using footsteps and track shoes on the machine.

7) Be aware of the danger of high-pressure oil spray when adjusting track tension
Operate, maintain, disassemble, assemble and transport the machine. Please read the instruction manual before the operation.

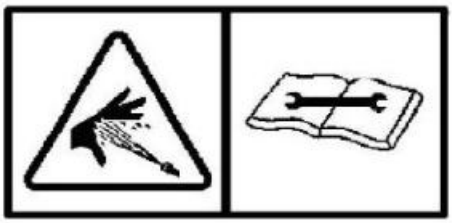

8) Swing center.

9) Sling Combination.

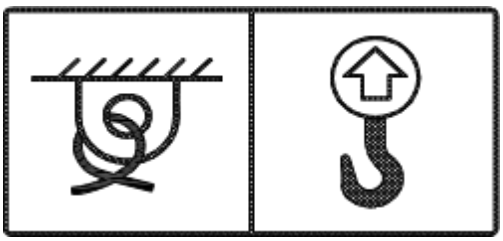

10) Exercise caution and maintain a safe distance from the excavator.

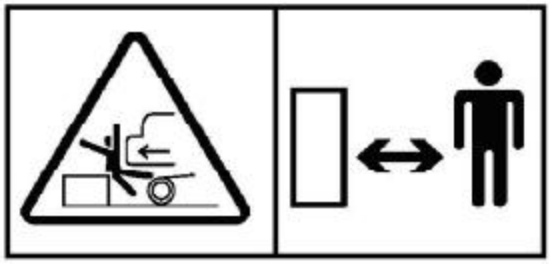

When the machine is rotating, the upper rotating body may pinch your body; do not enter the rotating area.

11) After opening the cab flip window, please ensure it is securely locked.

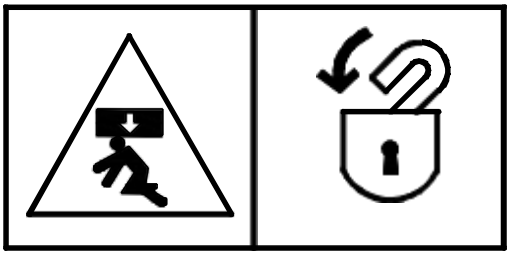

Unsecured windows may suddenly close due to external forces or vibrations from the machine, which could result in personal injury.

12)When performing maintenance and adjustments on the machine, please ensure the engine is shut down.

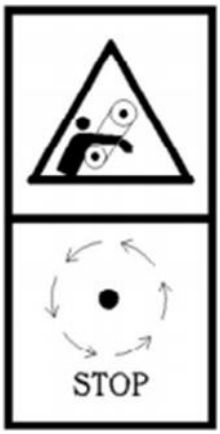

13） Fuel Filling Identification.

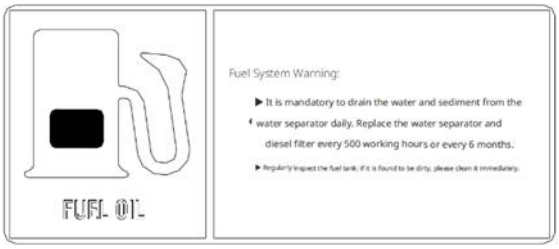

14) Fire Prevention Identification.

15) Hydraulic Refueling Identification.

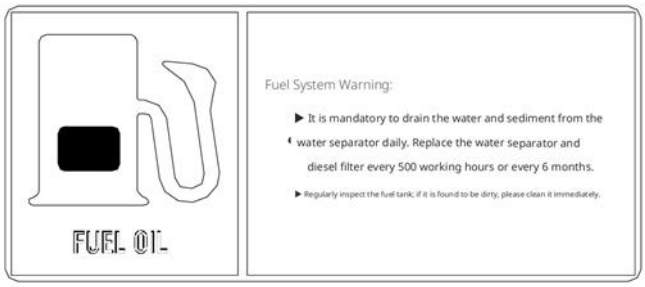

16)The hydraulic oil and engine coolant should not have their container lids opened while in a high-temperature state.

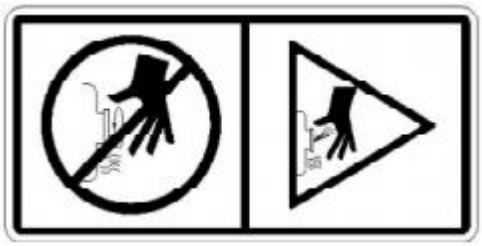

High-temperature hydraulic oil and coolants are under high pressure; opening the lid at this time may cause hot oil to spray out, resulting in personal injury. Wait for them to cool down before removing the lid.

17) Manual Throttle Identification

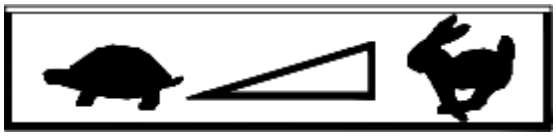

Do not use your hands or any other part of your body to detect high-pressure fluid leakage points. Avoid being sprayed by high-pressure fluid, as it may cause bodily harm

18) Escape Direction Warning Identification.

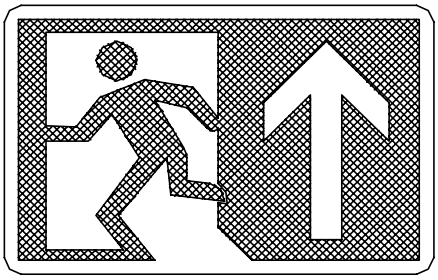

19) Lifting Identification.

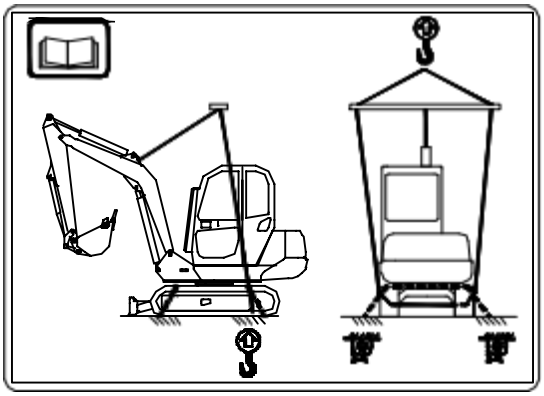

20) Beware of poisonous gases

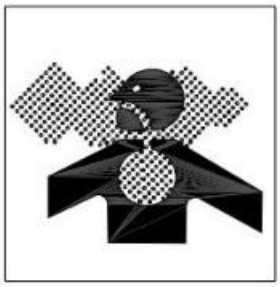

Toxic gases or fumes can suffocate people.

21) Hazard of high-pressure fluid (injection, leakage/spraying)

Do not use your hands or other parts of your body to feel for high-pressure fluid leaks

Do not be sprayed by high-pressure fluid, otherwise it may cause personal injury.

22) Caution: High Voltage Electric Wires.

23) Fire Extinguisher.

24) No Smoking. The use of fireworks is prohibited.

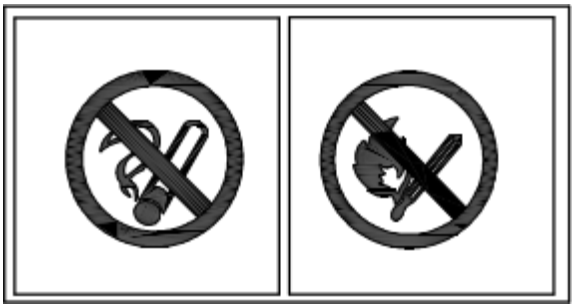

25) Watch out for explosion

26) Precautions for using an emergency escape hammer

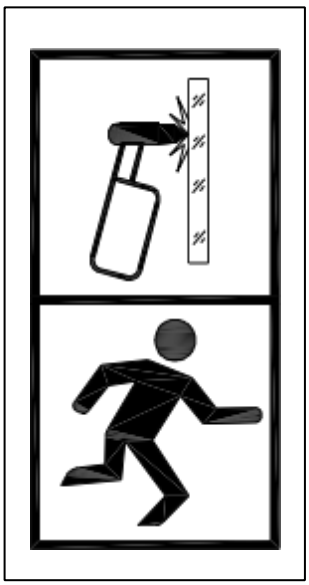

Please read carefully and memorize the contents for future reference.

27) Disassembling, drilling cutting, or striking energy accumulators and high-pressure components of gas springs is strictly prohibited, they must also be kept away from open flames or high temperatures.

These components contain high-pressure gas; improper handling Please allow only experienced personnel to handle them.

28) When conducting electrical maintenance, ensure that you consult the user manual and relevant materials.

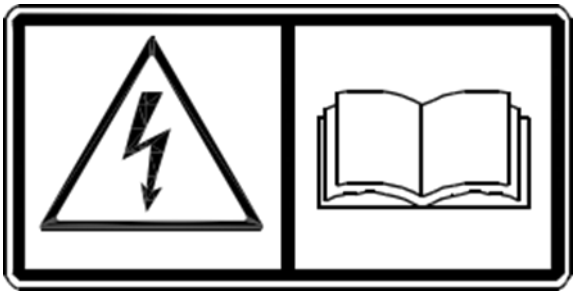

The electrical system is prone to electric shock and other hazards. Be sure to follow the follow the instructions and other related guidance.

29) Be careful with high temperature parts such as the engine, water tank, and muffler. Engine fan damage to people.

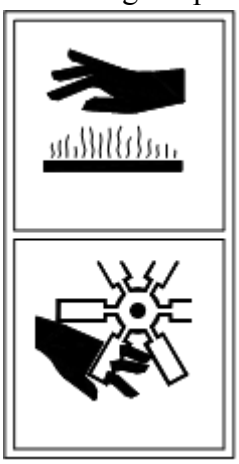

Do not touch directly. Turn off the engine and wait for the engine to The temperature drops to a suitable temperature.

30) Accessory pipeline identification, the upper picture shows the oil inlet pipeline, the lower picture shows the oil inlet pipeline. The figure shows the oil return line.

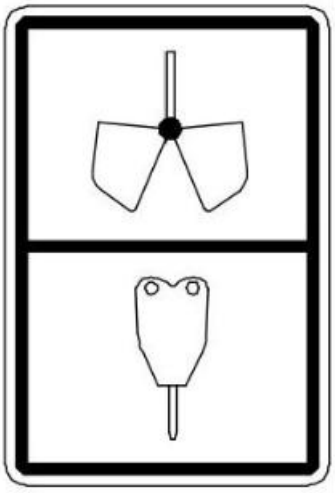

Safety at the Work Site

As much as possible, familiarize yourself with the area where you will be working. Please check the following:

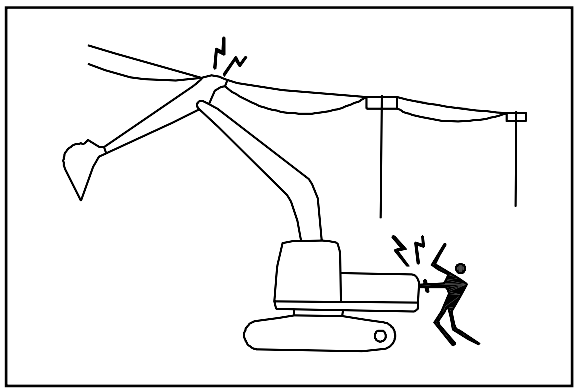

1.The location of slopes.

2.Ditches.

3.Falling objects or overhead hazards.

4. Soil conditions (soft or hard).

5.Standing water and marshy areas.

6.Rocks and stumps.

7.Boundaries of buried foundations, root columns, or walls.

8.Boundaries of buried debris or fill.

9.Holes, obstacles, mud, or ice.

10.Traffic volume.

11.Dense dust, smoke, or fog.

12.Ensure the accurate location of buried or overhead electrical, gas, telephone, water, sewage, or other utility lines. If necessary, have the utility company mark, shut down, or relocate these facilities before commencing work.

Warning: Before initiating excavation projects, please contact the local utility service systems and departments.

13. When working inside buildings, ascertain the clearance of ceilings, porches, hallways, etc., as well as the load-bearing capacity of floors and ramps. Ensure adequate ventilation during indoor operations. Unclear objects may pose a risk to your safety.

14. Ensure that you understand the precise distances between electric wires, telephone lines, and the machine, as well as between the machine and the ground. If possible, it is advisable to disconnect the power supply. If disconnection is not feasible, please request guidance from a signal person.

15. It is imperative to maintain the statutory minimum distance from underground gas pipes, cables, telephone lines, and water pipes.

Warning: If you look inward from the end of a damaged cable, the severed fiber can cause severe eye injuries.

16. Operating this machine in culverts or underground is strictly prohibited.

17. Operating in mud, swamps, or marshes is strictly prohibited.

18. Operating in the presence of hazardous chemical substances is strictly prohibited.

19. Using this machine in explosive environments is strictly prohibited.

Safe Operation

Warning: It is strictly forbidden to transport or lift personnel with the excavator.

Warning: Before operating the machine, you must fasten your safety belt, honk the horn, and ensure that the work area is clear of personnel before commencing operations.

1. Starting the Machine

A. Safety Guidelines for Starting the Engine

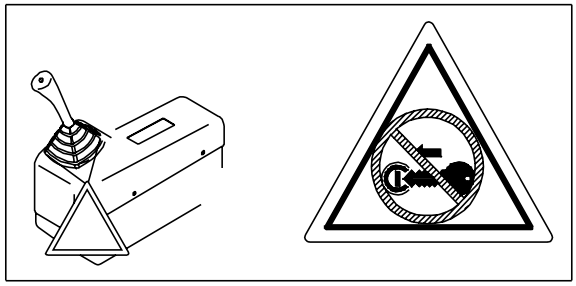

1)Before starting the engine, the horn must be sounded as a warning.

2)No one other than the operator is permitted to ride in the machine.

3)The machine may only be operated while seated in the operator's seat.

4)The engine must not be started by short-circuiting the starter motor.

5)The machine must be preheated in cold weather.

Warning: 1. The engine must not be started when a 'No Engine Start' warning sign is displayed on the handle.

B. After starting the engine, the following items must be checked:

1) Ensure that the safety belt is properly fastened.
2) Verify that the moving components, including the working device, bulldozer blade, traveling mechanism, rotation, and working device deflection, are functioning normally.
3) Check for any abnormalities in the machine's sound, vibration, odor, or instruments.
4) Inspect for any leaks in the engine oil and fuel.

Traveling and Rotation

1) Before traveling, please position the upper part of the machine platform appropriately Device, aligning the working device with the bulldozer blade. If the working device is oriented in the opposite direction to the bulldozer blade, the operation will be reversed.

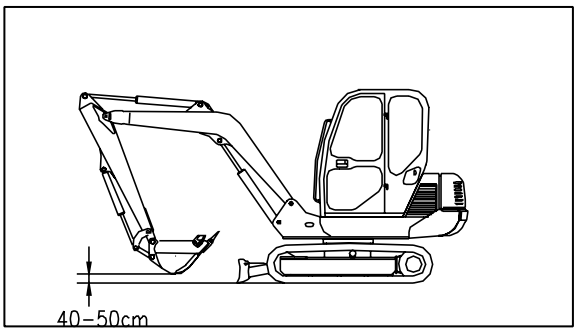

2) Before traveling and rotating, the horn must be sounded to alert individuals in the work area.

3) The excavator must operate on solid ground that is at least 1.5 times its width.

4) Before traveling, the cab door must be closed and locked. The cab windows, flip window, and sunroof (if equipped) may remain open, but they must be secured.

5) Before the machine reverses or rotates, if there are areas behind the machine that are not visible, a signal commander must be assigned.

Safety Rules for Traveling.

1) When traveling on a flat road surface, the boom must be lowered, the arm must be retracted, and the center of gravity should be maintained in the optimal position, keeping the bottom of the bucket 40 to 50 cm above the ground.

2) When traveling on rough and uneven road surfaces, low-speed travel should be employed, and sudden turns must be avoided; otherwise, there is a risk of the machine overturning, which could endanger personal safety.

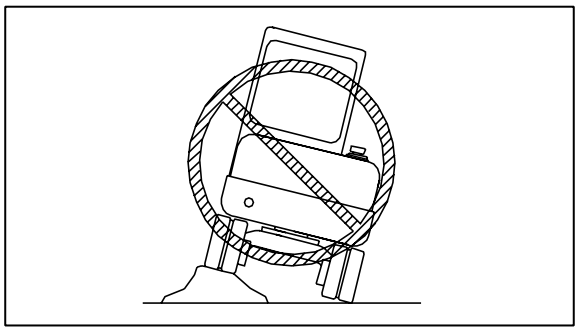

3) The machine must not traverse obstacles that are inclined to one side, as this may result in the machine overturning.

4)When traveling or operating, always maintain a safe distance from individuals buildings, or other machines to prevent contact.

5) When navigating through confined spaces such as underground passages, beneath bridges, or under electric wires, ensure that hand signals are used for guidance. Furthermore, be cautious to maintain a safe distance from these structures.

6) When traveling up or down a slope, it is essential to lock the platform.

7) Before passing over a bridge, building, or support structure, ensure that they can adequately support the weight of the machine.

8) Prior to traveling on a highway, consult the local traffic management department and obtain their permission.

3. Traveling or operating on a slope.

The excavator presents a significant hazard when traveling or operating on a slope; utmost caution must be exercised.

1) It is recommended not to ascend or descend slopes greater than 20 degrees for extended periods.

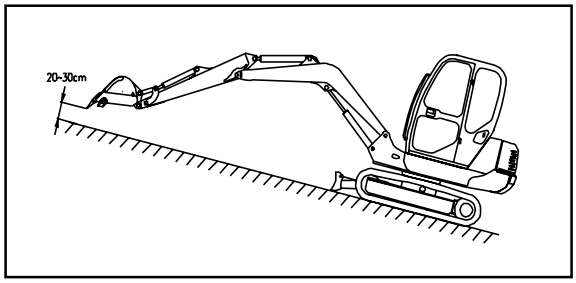

2) When the machine is in operation, especially when ascending or descending slopes and working in hazardous areas, ensure that the safety belt is securely fastened

3) When the excavator is ascending a slope, the drive wheels should be oriented downhill. The boom and arm should be fully extended parallel to the slope, with the bucket teeth positioned 20-30 cm above the ground. After locking the platform, ascend the slope at low speed.

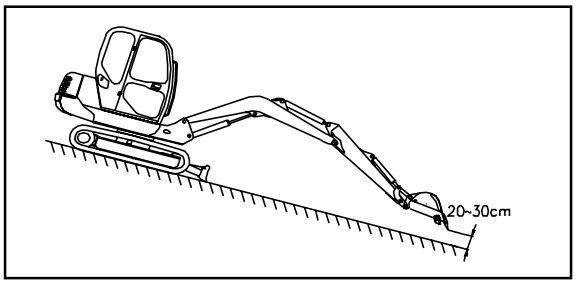

4) When the excavator is descending a slope, the platform should be locked, and the drive wheels should be oriented uphill. The boom and arm should be fully extended, with the bucket teeth positioned 20-30 cm above the ground, and descend the slope at low speed.

5) Do not turn or traverse a slope.
Always move to a flat area to change the machine's position before ascending the slope.

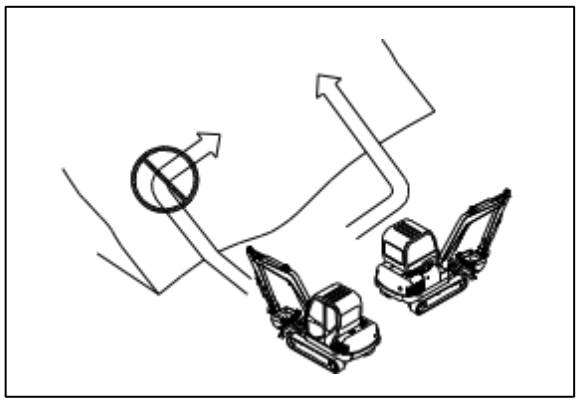

6) when operating on a slope, you must begin from the higher point and gradually excavate downwards, ensuring that the bulldozer blade is positioned at the rear stabilize the machine on the ground, with the dumping location oriented uphill.

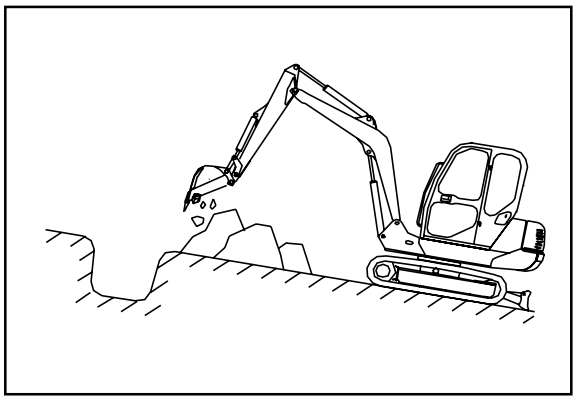

7) Travel at low speed on grass, fallen leaves, or wet steel plates, as there is a risk of slippage even on very gentle slopes.

8) It is strictly prohibited to make sharp turns while going uphill or downhill; otherwise, the machine may roll over.

9) When stopping on a slope, the front bulldozer blade must be inserted into the ground, and the bucket must be lowered to penetrate the ground. Only after the machine has stabilized is it permissible to stop the engine and for the operator to disembark.

Danger

Stopping the machine on a slope is very dangerous! If it is unavoidable, press Do the following: If the engine stalls on a slope, immediately lower the dozer blade and bucket to the ground and place all handles in neutral position, and then restart the engine. Stop the machine during this period and lower the bucket and dozer blade to the ground. Pull all handles to the middle position and place them at the lower end of the track. Sufficient fixed obstacles.

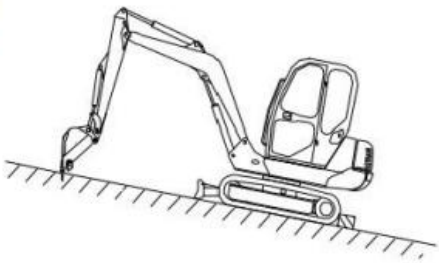

10) It is strictly prohibited to travel or operate on slopes with a longitudinal gradient greater than 25 degrees.

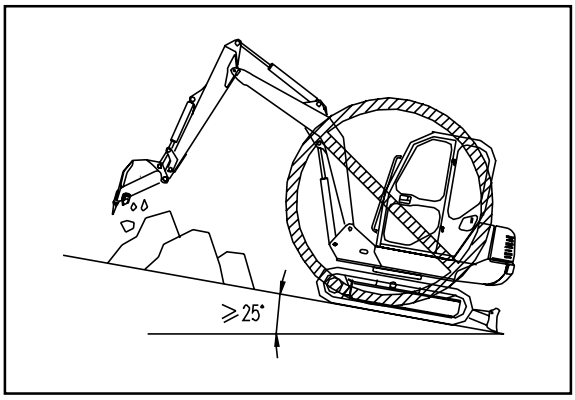

11) It is strictly prohibited to travel or operate on slopes with a lateral gradient greater than 15 degrees.

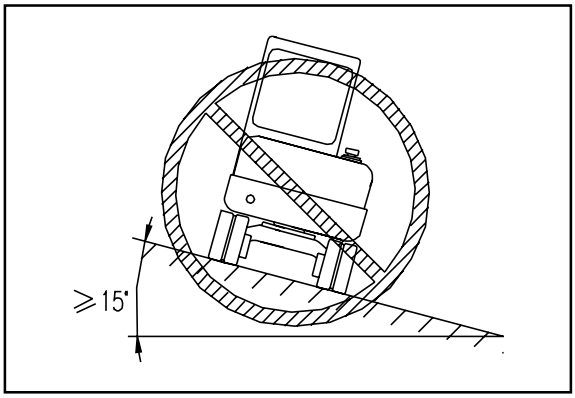

12) Always maintain the machine's balance; it is strictly prohibited to travel on rocks or to cross obstacles.

13) Changing direction on a slope is not permitted.

14) When ascending a slope, ensure that the engine and hydraulic oil are properly preheated; otherwise, it may result in accidents.

15) When the bucket is fully loaded, do not allow the working de- vice to swing from the uphill side to the downhill side. Such an operation is hazardous and may cause the machine to overturn.

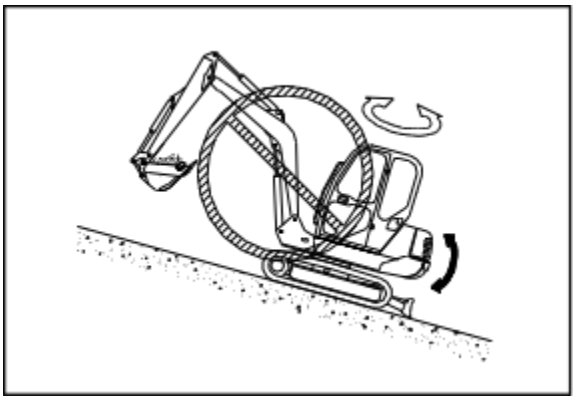

16) When operating on a slope, there is a risk of losing balance and overturning the machine during rotation or operation of the working device. This can lead to serious injury or equipment damage; therefore, it is crucial to establish a solid platform using earth mounds that can maintain the machine's level.

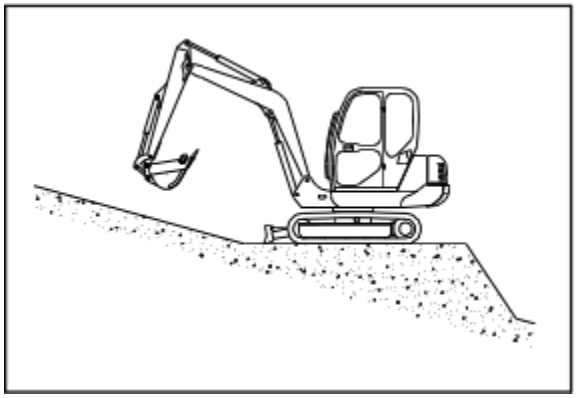

4. Safety in Excavation Operations.

Warning: Operators must be thoroughly familiar with the functions of each control lever to avoid erroneous actions.

Warning: Improper use of the excavator may lead to tipping and slippage; familiarizing yourself with this section is essential for ensuring your personal safety.

1) Before commencing work, all unauthorized personnel must be removed from the excavation site.
2) Ensure that the work area can adequately support the machine before proceeding.

3) Both tracks of the excavator must be maintained on the same plane as much as possible during operation.

4) Ensure that there are no cables , air pipes, or water pipes beneath the work area, or that their specific locations have been clearly identified before commencing excavation.

5)When the device is operating in reverse (such as during trenching), check that the travel path is level and free of obstacles. Movement should only proceed when safety is assured, otherwise, it may result in the device overturning

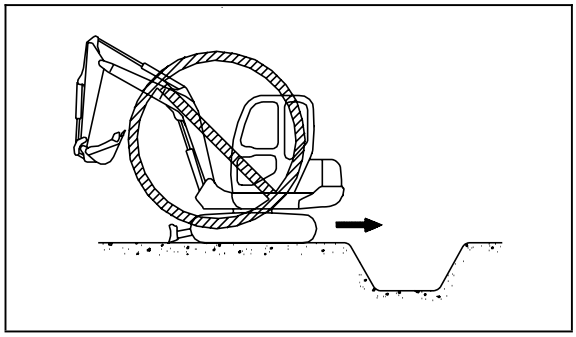

6) Do not walk or rotate the machine if the bucket is encountered. Unusual resistance on the ground, as this may cause damage to the machine.

7) When conducting excavation operations, the tracks should be adjusted to form a right angle with the shoulder or cliff, and the sprocket should be positioned at the rear to ensure that the machine can easily retreat in any situation.

8) During operation, if the hydraulic cylinder reaches the end of its stroke, force will be exerted on the internal limit ring of the cylinder, which can reduce the machine's lifespan. To prevent this, a small margin should always be maintained when operating the hydraulic cylinder.

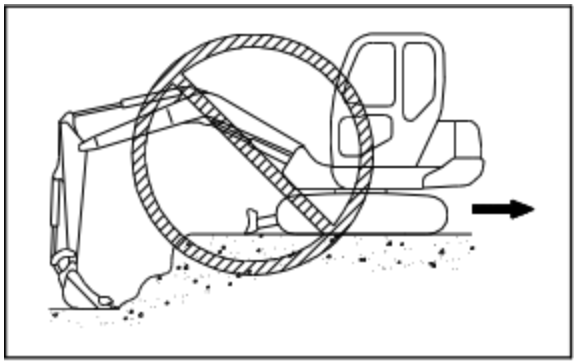

9) When performing deep excavation, ensure that the base of the boom and the hose of the bucket's oil cylinder do not come into contact with the ground.

10) When operating the machine, ensure that foreign objects do not come into contact with the boom, arm, or cab.

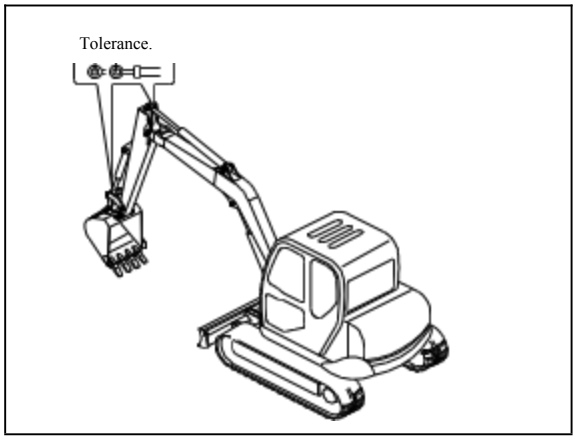

11) When the machine is rotating, avoid any contact with the engine cover and rear counterweight.

12) When lowering the boom, avoid stopping suddenly whenever possible to prevent operational damage to the machine and to enhance safety during work.

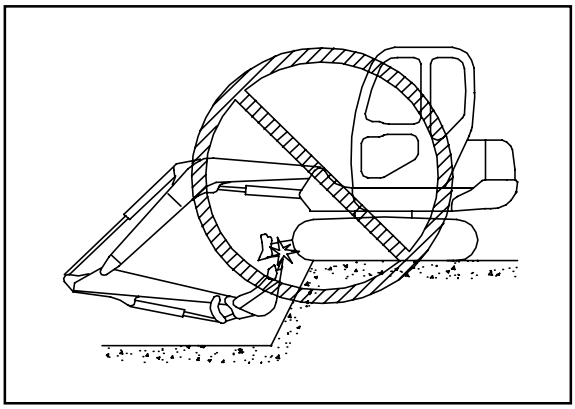

13) Do not excavate on the machine's body.

14) Do not excavate too deeply in front of the machine; otherwise, the ground beneath it may collapse, causing the machine to fall.

15) Do not perform excavation operations when the tracks are off the ground, as this may cause damage to the machine and its structure.

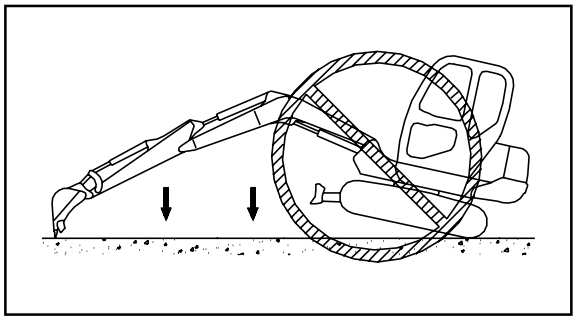

16) Do not rely on the machine's weight to increase its digging force.

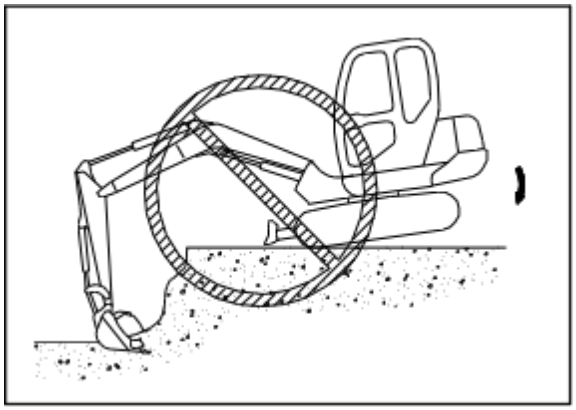

17) Do not use the falling force of the bucket as a pick, breaker, or pile driver, as this will subject the rear of the machine to excessive force. This not only risks damaging the machine, but it is also extremely hazardous.

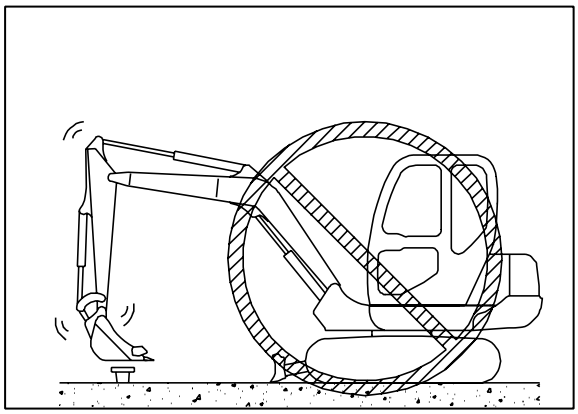

18) Do not excessively use the bucket to level the road surface; otherwise, various components may sustain damage due to overload.

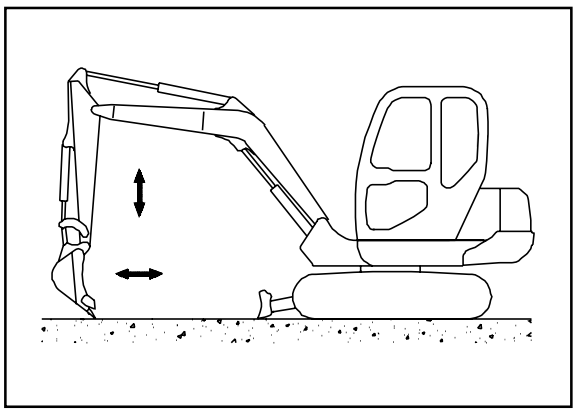

19)Do not utilize the machine's falling force for excavation, as this may result in damage machine.

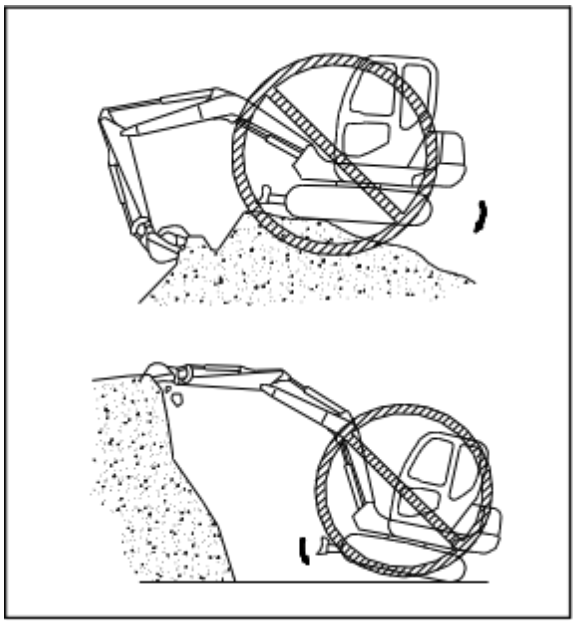

20)Do not employ the rotational force to compact the soil or to disrupt soil piles and walls. When rotating, avoid inserting the bucket teeth into the soil, as these actions may damage the working device.

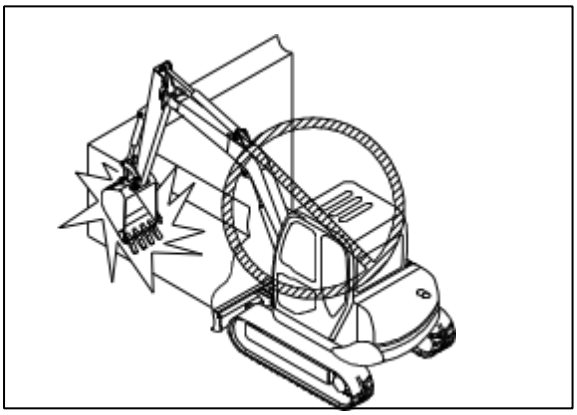

21) Do not use the traveling force to dig with the bucket into the ground, as this will impose excessive force on the rear of the machine.

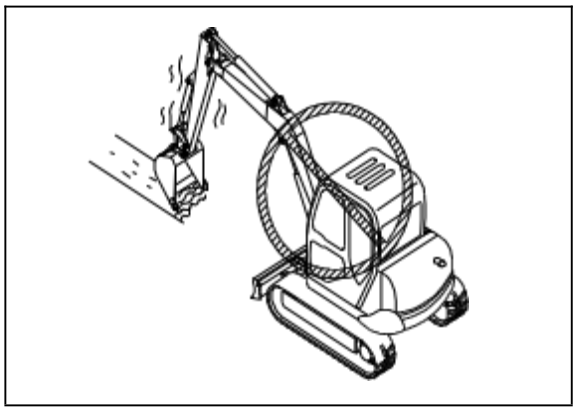

22) Do not excavate beneath suspended sections of the work surface, as this presents a risk of falling rocks or collapse of the suspended section, which could impact the machine.

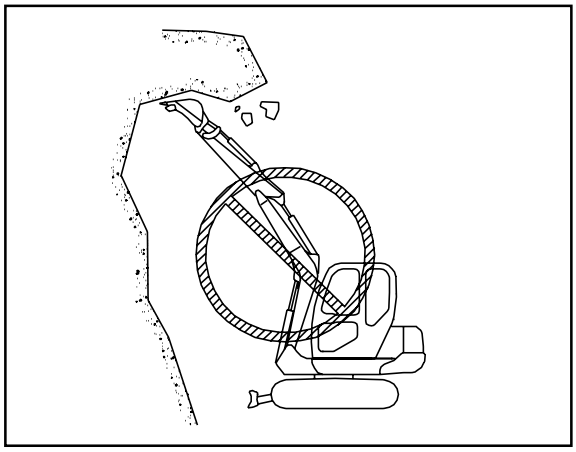

23) If the machine is operating in an area with a risk of falling objects or splashing hazards, ensure that protective devices against falling objects and splashes are installed.

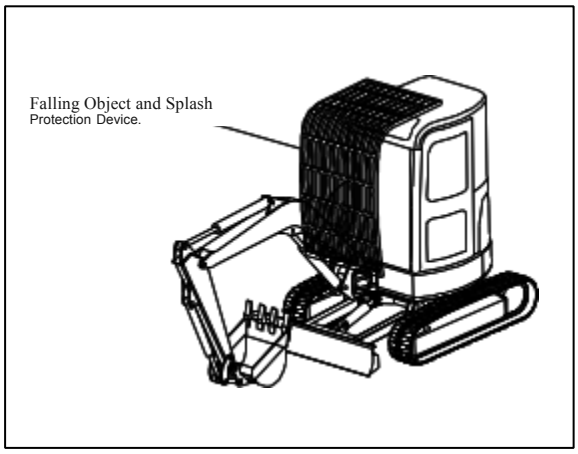

24) It is prohibited for the machine to operate or travel on soft road surfaces or marshy areas.

25) Please do not use the excavator to tow other equipment or objects.

26) Do not use the machine to lift objects. Doing so may damage the working device and create safety hazards.

27) Do not perform dismantling operations underneath the machine , as this can compromise stability and pose a risk of rollover.

28) When working above buildings or other structures, ensure to check the strength of the structure before commencing operations. Failing to do so may result in a risk of collapse, leading to serious injury or damage.

29) Do not use the impact force of the working device for breaking operations, as this poses a hazard of flying debris from broken materials, which can cause personal injury or damage to the working device.

30) It is prohibited to use the bulldozer blade as a stabilizing device during machine operation.

5. Operation in Snowy Conditions.

1) Surfaces covered with snow or ice are extremely slippery. Exercise caution when walking or operating the machine. Avoid sudden. Movements of the control lever. Even a slight slope can cause the machine to slip; therefore, special attention is required when working on slopes.

2)For frozen ground, when the temperature rises, the ground may become soft, which can lead to the machine rolling over.

3)If the machine enters deep snow, there is a risk of overturning or becoming buried in the snow. Exercise caution to avoid straying from the path or getting stuck in the snow.

4) When clearing snow, objects buried in the snow near the shoulder and road are not visible, creating a risk of the machine over- turning or colliding with these hidden objects. Therefore, it is crucial to operate with care.

6. Safety Measures for Preventing Tipping, Slippage, and Emergency Procedures During Operation.

Warning:

1) When it is necessary to turn on a slope, only wide turns are permissible. When the machine needs to turn right, extend the boom and arm to the left, keeping the bucket approximately 30 cm above the ground, and lock the platform. The opposite applies for left turns.

2) In the event of slippage, immediately press the bulldozer blade and bucket down into the ground.

3) If the device happens to tip over, the operator must not jump from the machine; instead, they should firmly grasp the handrails inside the cab or the vertical columns of the operator's shelter. Jumping from the machine can easily lead to serious injuries or fatalities.

The following situations make the device highly susceptible to tipping over and must be strictly avoided:

1) The device is moved on uneven ground, with one track elevated compared to the other, or when more than half of one track is suspended.

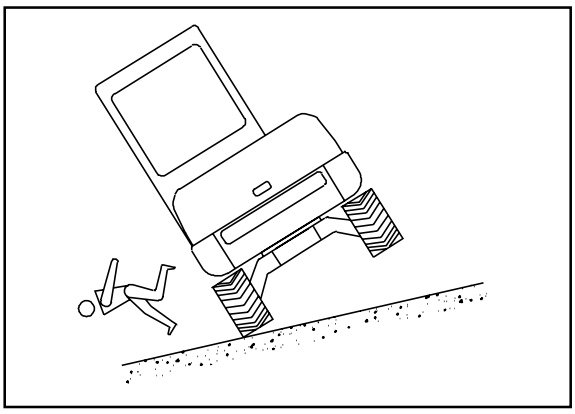

2) One track is on loose soil while the other is on solid ground.

3) There are underground cavities or mud pits present on one side of the device.

4) Operating on a slope greater than 25° while unloading materials in the downhill direction.

5) When operating on a slope with a lateral gradient greater than 15°, materials should be unloaded in the downhill direction.

6) On a slope, when both tracks are positioned at a 90° angle to the slope, and the platform rotates more than 90° .

7) When operating on a slope, avoid sudden turns of the device, rapid platform rotation, or unexpected shutdowns.

8) When the device swings downwards at a 180° angle on a slope.

9) During backward operations (such as trenching) when the road surface is uneven.

10) When the device is performing deep digging to the lower part of its body.

11) Traveling on frozen ground.

12) The machine is susceptible to slippage when both tracks contain engine oil or lubricant.

7.Shut down the machine.

Refer to the section on parking the machine.

Transporting and loading/unloading the machine.

The transport (loading/unloading) of the excavator must strictly adhere to safety principles.

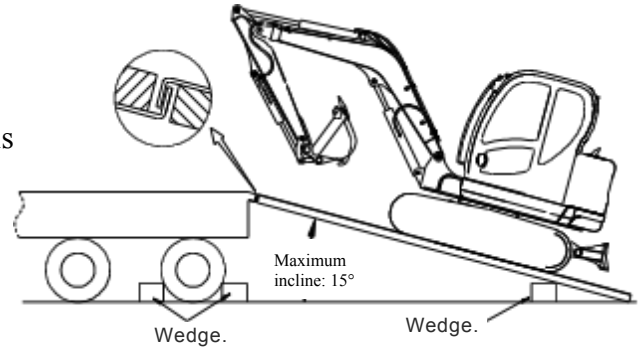

- When transporting the excavator, it is essential to comply with national and local industry regulations regarding safe transport (loading/unloading) and to ensure safety.

- During the transport of the excavator, it is strictly prohibited to carry any personnel or other items in the excavator cab, and mixed loading or transport of personnel and machinery
- During the loading and unloading of the excavator, no personnel or items that may obstruct the process are permitted within the active radius of the crane's boom (including the lifted object).

- During the loading and unloading of the excavator, no personnel or other items that may obstruct the process are allowed within the walking range of the excavator (including its rotation range).

In addition to using lifting methods or driving directly from the dock, the excavator can also be driven onto the transport vehicle using two sufficiently strong planks. The incline of the planks should be less than 15°, the length of the slope should exceed 5 times its height, and the width of the planks should be 1.2 to 1.5 times the width of the tracks.

- When using the sliding track, it is prohibited to operate any handles other than the travel (low speed)handle.
- Ensure that the machine is loaded and unloaded on a solid, flat surface. Tracked machines may cause damage to the road surface; therefore, there are specific restrictions when traveling on such surfaces. Please transport the machine by truck when operating on these surfaces.

Shutdown and Maintenance

> ⚠ Warning: When conducting any maintenance work on the machine, a Do Not Operate warning sign must be affixed to the control handle.

- The excavator must be parked on solid, level ground.
- Once the excavator has come to a complete stop, the bucket must be lowered to the ground, and the engine should be idled for three minutes before shutting down and removing the key from the ignition.
- Release all pressure from the hydraulic system.
- If it is absolutely necessary to park on a slope, sufficient obstacles should be placed on the lower side of both tracks. When parking, ensure that a sufficient distance is maintained from other machines.
- When repairing the electrical system or performing welding, it is essential to remove the negative cable of the battery to prevent the flow of current.
- Before conducting maintenance on the machine, if it is necessary to support the machine or attachments for work, ensure that they are securely supported. Do not work under a machine that is only supported by a single jack.
- Once the machine is started, do not lubricate or perform maintenance, and ensure that hands, feet, or clothing do not come into contact with moving parts.
- If maintenance work is to be conducted while the engine is running, the machine must be monitored by a designated individual.
- Avoid carrying loose items in your pockets to prevent them from falling into moving components.
- High-pressure fluids can splash and cause injury to the eyes or skin; they should be avoided during maintenance.
- Clear all debris from inside the machine to prevent potential unintended actions that could result in injury to personnel or damage to the machine.
- Dispose of waste fluids properly; do not pour oil onto the ground, into drainage ditches, streams, ponds, or lakes. When disposing of engine oil, fuel, antifreeze, plastics, battery fluid, and other hazardous waste, ensure compliance with environmental regulations.

Fire prevention, explosion prevention, and poisoning prevention

- The excavator must avoid contact with electric wires during transport, traveling , and excavation: failure to do so may result in serious injuries or fatalities.
- The electrical components and wiring of the excavator should be inspected regularly. If any damage, wear, or aging is detected, they must be replaced promptly to prevent electrical short circuits that could lead to a fire.

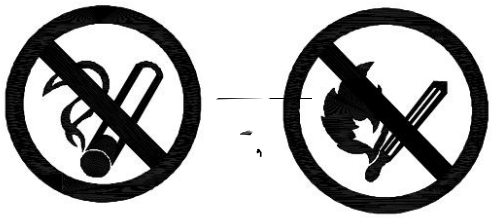

- Ensure that the electrical wire connections are clean and securely fastened. Daily inspections should be conducted to check damaged wires, any or wire clamps should be tightened, while damaged wires should be repaired or replaced.

- Flammable and explosive materials must not be placed inside the excavator; strict fire prevention measures must be implemented.
- When refueling, the engine must be turned off, and refueling should be conducted in a location away from fire sources without leaving the machine unattended.

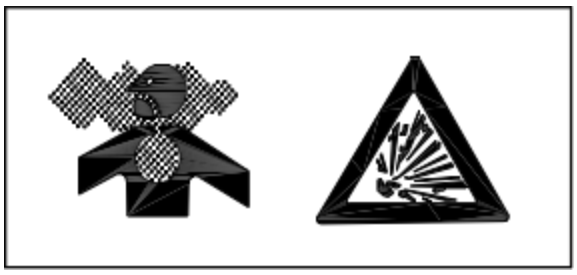

- During refueling, fuel must not spill onto overheated surfaces or electrical systems is removed from the components.
- After refueling,,wipe off any spilled fuel or engine oil and ensure that fuel ensure the engine oil tank cover is securely tightened.
- Promptly remove any accumulation or residue from the engine, exhaust pipes, and muffler. Remove any blades, wood chips, paper fragments, and other flammable materials from within the engine compartment.
- Do not store oil-soaked rags inside the machine to prevent spontaneous combustion and fire hazards.
- Users must equip the machine, with a fire extinguisher, placing it in a readily accessible location.
- Welding on the machine is strictly prohibited unless the hydraulic oil pipelines and fuel lines have been properly isolated.
- To prevent fires caused by hydraulic pipelines, check that all hose clamps, shields, and cushioning pads are securely fastened. Loose components may vibrate during operation and come into contact with other parts. Friction may cause damage to the hose, resulting in high-pressure oil spraying out, which can lead to fire hazards or serious injury.
- The battery must be kept away from fire sources and high temperatures; otherwise, it may result in an explosion.
- For excavators equipped with sealed cab, it is crucial to check the integrity of the partition seal to prevent engine exhaust from entering the cab and causing operator poisoning.
- It is strictly prohibited to operate in poorly ventilated areas to prevent the operator from suffocating.
- In the event of a fire, do not attempt to extinguish it with water; instead, use a powder fire extinguisher or sand to smother the flames. You may also use a cover or tarpaulin to suffocate the fire.

Battery

The safety guidelines for the battery indicate that the electrolyte contains sulfuric acid, which can produce flammable and explosive hydrogen gas. Improper operation may result in serious injury or fire.

Therefore, it is crucial to adhere to the following precautions:

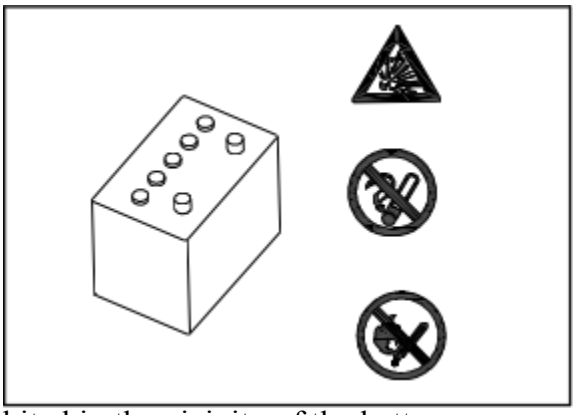

- The battery cover is equipped with an indicator that displays the battery's charge status. When the indicator shows green, the battery can be used normally. When the indicator shows black, the battery should be charged promptly. When the indicator shows white, it should be replaced immediately.
- When operating the battery, it is essential to wear safety glasses and rubber gloves.
- Smoking or using an open flame is strictly prohibited in the vicinity of the battery.
- If sulfuric acid comes into contact with the eyes, clothing, or skin, rinse the affected area immediately with plenty of water and seek medical attention without delay.
- Before operating the battery, ensure that the key switch is turned to the OFF position.
- Use a flashlight to check the electrolyte level; make sure the starter is turned off during this inspection.
- A bulging end of a sealed battery indicates that the battery has frozen. If the battery is frozen, do not charge it or jump-start the engine.
- Do not heat a frozen battery to more than 15°C; otherwise, the battery may explode.
- Battery Explosion Protection.

Warning: Electric sparks or flames can cause an explosion of the hydrogen inside the battery. To prevent an explosion, please observe the following precautions:

1) When disconnecting the battery cable, always disconnect the negative (-) cable first.

2) When connecting the battery cable, always connect the negative (-) cable lasts.

3) Do not short-circuit the battery terminals with metallic components.

4) Do not engage in welding, grinding, or smoking near the battery.

Due to the hazard of sparks, please follow the steps outlined below.

- Ensure the battery is securely installed in the designated position.
- Avoid allowing tools or other metallic objects to meet the battery terminals. Do not drop tools or other metallic objects near the battery.
- Connect or disconnect the positive and negative terminals of the battery in the correct order. The battery terminals must be securely fastened.
- When charging the battery, flammable hydrogen gas will be produced. Therefore, before charging, remove the battery from the lower chassis, place it in a well-ventilated area, and remove the battery cover.
- Ensure the battery cover is tightly secured.

Note: When repairing the electrical system or performing welding operations, disconnect the negative terminal of the battery to prevent current flow.

Hydraulic System

1. Safety Rules for High-Pressure Oil.

The hydraulic system is always under pressure. When inspecting or replacing pipelines or hoses, it is essential to verify that the pressure in the hydraulic oil circuit has been released. If there is still pressure in the oil circuit, it can result in serious injury or damage.

Therefore, the following regulations must be adhered to:

1) Do not conduct inspections or replacements while there is pressure in the hydraulic system.
2) If there are any leaks in the pipelines or hoses, the surrounding area will be wet. Therefore, check for ruptures in the pipelines or hoses and inspect whether the hoses are swollen. When conducting inspections, always wear safety goggles and leather gloves
3) High-pressure oil leaking from small holes can penetrate the skin, and direct contact with the eyes poses a risk of blindness. If high-pressure oil strikes the skin or eyes and causes injury, rinse the affected area with clean water immediately and seek medical attention.

2.Safe Operation of High-Pressure Hoses

If high-pressure hoses leak or seep oil, it can result in fire or operational failure, leading to serious injury or damage. If any bolts are found to be loose, cease operations and tighten the bolts to the specified torque. Welding on the machine is strictly prohibited unless the hydraulic oil pipelines (hoses) are properly isolated. If any damage to the hoses is detected, stop operations immediately and contact a Yuchai dealer.

If any of the following issues are detected, the hose must be replaced:

1) Hydraulic hose connections are damaged or leaking;
2) The outer layer is worn or broken, or the reinforcing steel wire is exposed;
3) There are swollen areas on the outer layer;
4) Movable parts are twisted or crushed;
5) There are impurities within the outer layer.

3.Safety Rules for High-Temperature Oil

Hydraulic oil that has not cooled down during or after operation is at high temperature and high pressure. To prevent oil from spraying out or causing burns from contact with hot components when checking or draining oil, allow the oil to cool to a temperature that can be safely touched on the cap or plug before beginning operation. Even if the oil has cooled, slowly loosen the cap or plug before removing it to relieve internal pressure.

4.Release the internal pressure of the hydraulic system.

When the machine has just stopped working, the hydraulic oil in the hydraulic pipeline is in a high temperature and high-pressure state. When dis-assembling the oil port, oil may spray out; therefore, before removing the cover, rotate the oil filling port cover to relieve the internal pressure.

1) If the working device is not in the position shown in the diagram, start the engine at low speed, extend the bucket oil cylinder, and retract the dipper stick oil cylinder. Then, lower the bucket to the ground and place the bulldozer blade on the ground, and turn off the engine.

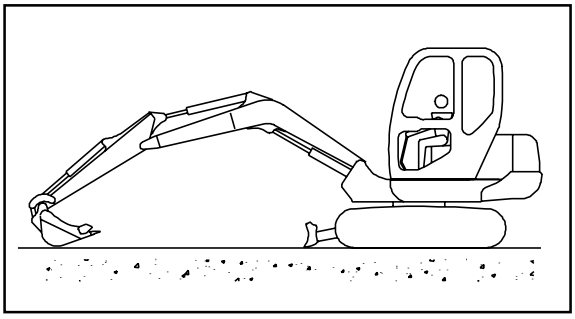

2) Turn off the engine within 15 seconds, set the ignition switch to the ON position, and operate the control lever for the working device and travel in all directions to release internal pressure.

5. Safe Operation of the Accumulator.

Warning: The accumulator is a component filled with high-pressure nitrogen gas; improper use may lead to hazards such as explosions.

Do not disassemble the accumulator, nor perform drilling, welding, or similar operations on it. Avoid placing the accumulator near fire sources and prevent it from being subjected to collisions and impacts. When disposing of the accumulator, please consult a professional.

The machine is equipped with an accumulator in the control pipeline.

This accumulator serves as a pressure storage device, enabling short-term operation of the control pipeline even after the engine has stopped.

By operating the joystick, the working device can be lowered under its own weight. Device method for depressurizing the machine's control pipeline equipped with an accumulator.

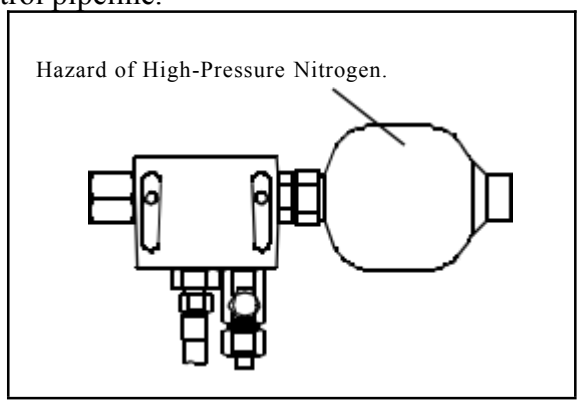

1) Lower the working device to the ground and then turn off the hydraulic breaker or other attachments.

2) Turn off the engine.

3) Turn the key of the ignition switches back to the ON position to allow current to flow through the circuit.

4) Adjust the safety lock control lever to the free position, then operate the working device control levers and attachment control

pedals (if equipped) through their full range__forward, backward, left, and right to release the pressure in the control pipeline.

5) Adjust the safety lock control lever to the locked position to secure the control levers and attachment control pedals.

3

Introduction to Components

Overview of Control Devices

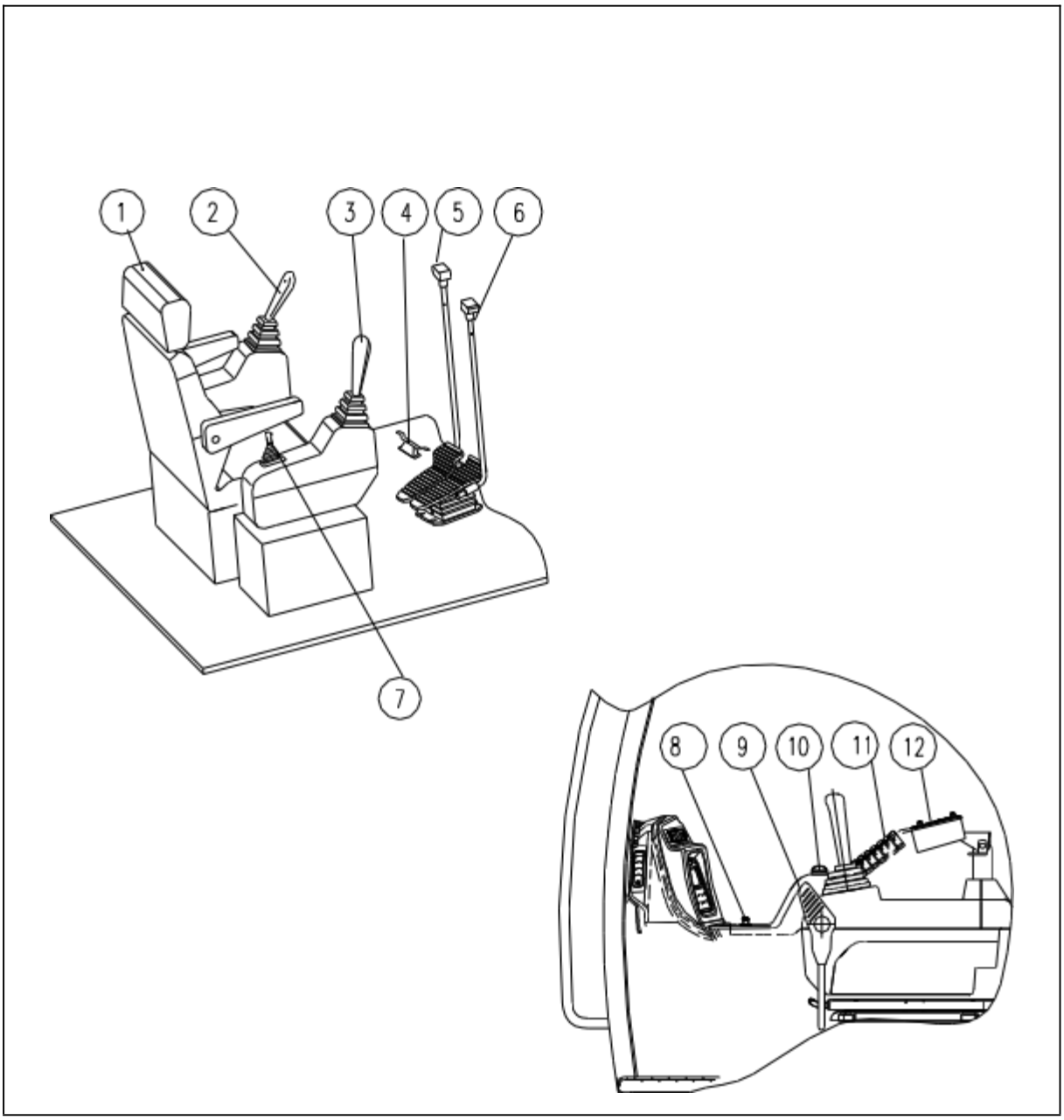

1. Seat
2. Left Working Device Control Lever
3. Right Working Device Control Lever
4. Auxiliary Control Pilot Valve Pedal Cover
5. Left Traveling Control Lever
6. Right Traveling Control Lever Panel
7. Bulldozer Blade Control Lever
8. Cigarette Lighter
9. Safety Locking Handle
10. Engine Throttle (Manual Throttle)
11. Control
12. Radio

Digital Combination Instrument

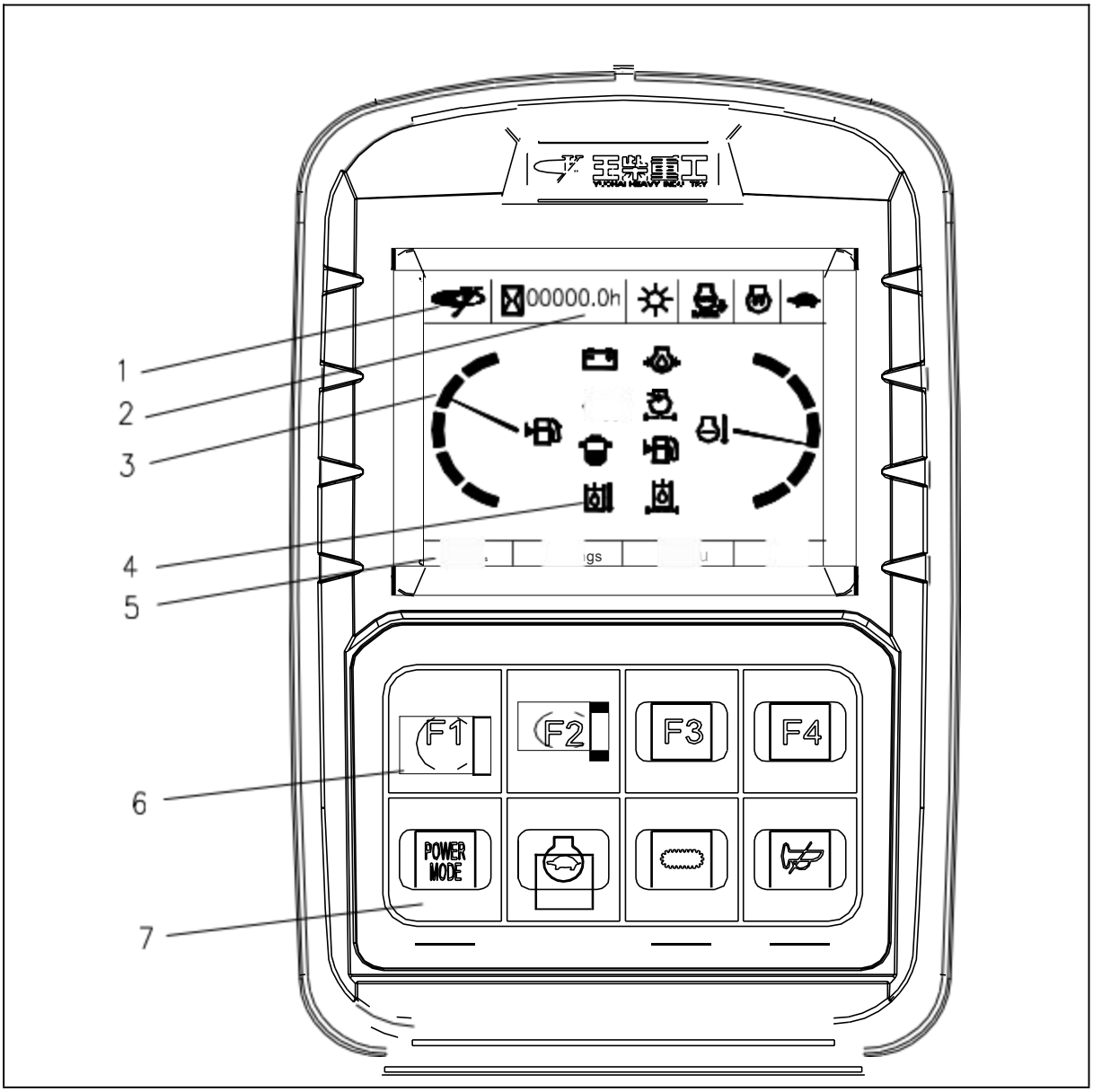

1. Machine Trademark
2. Machine Status Display Area
3. Machine Alarm Display Area
4. Main Display Area
5. Soft Key Area
6.Keys (Corresponding to Soft Keys)
7. Function Keys

A. Instrument Panel Display

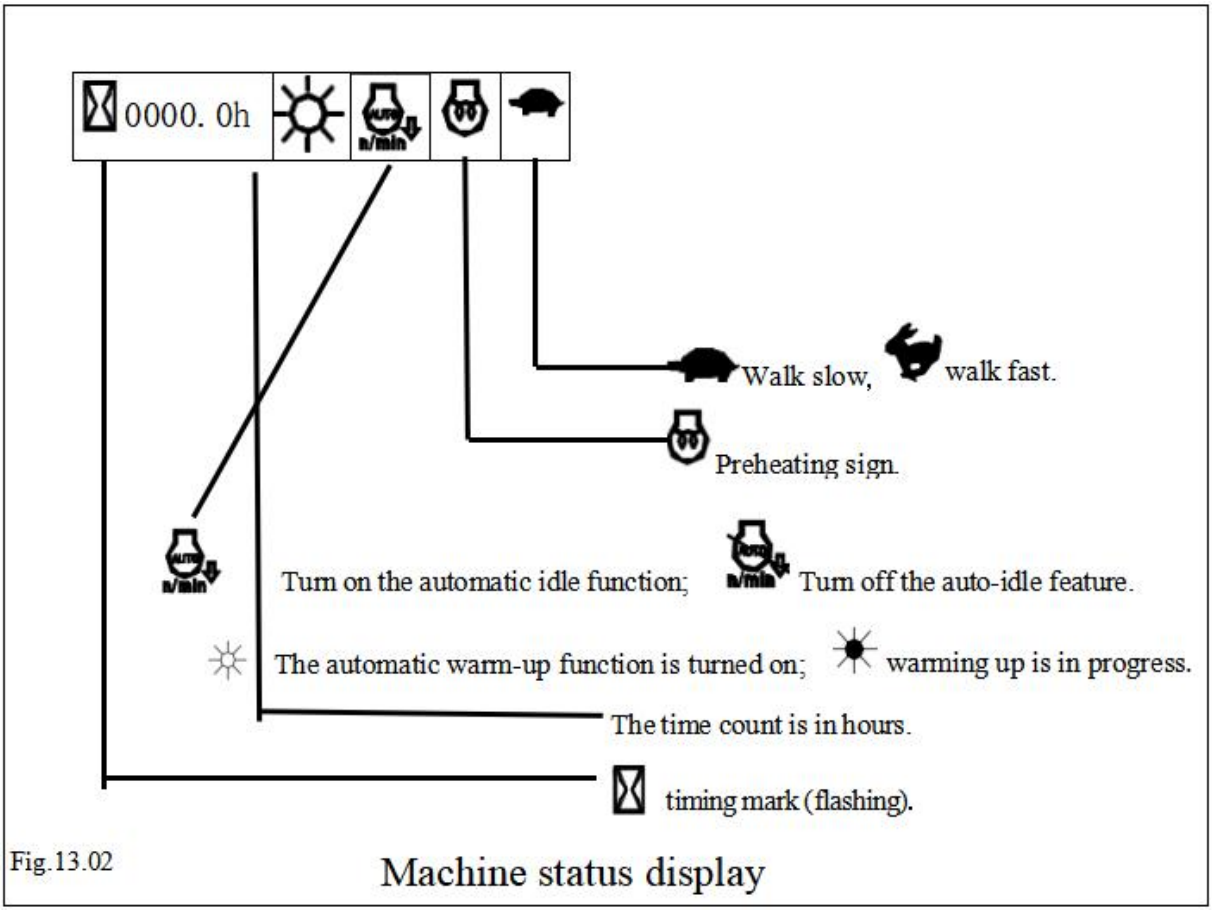

Fig.13.02 Machine status display

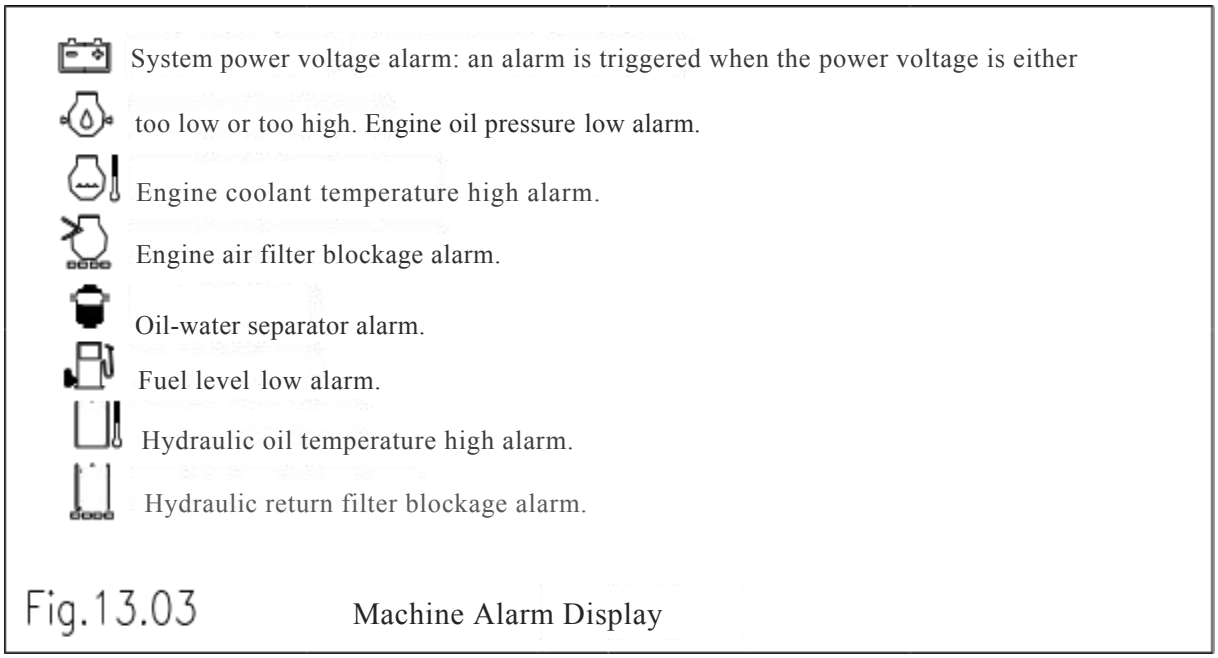

Fig.13.03 Machine Alarm Display

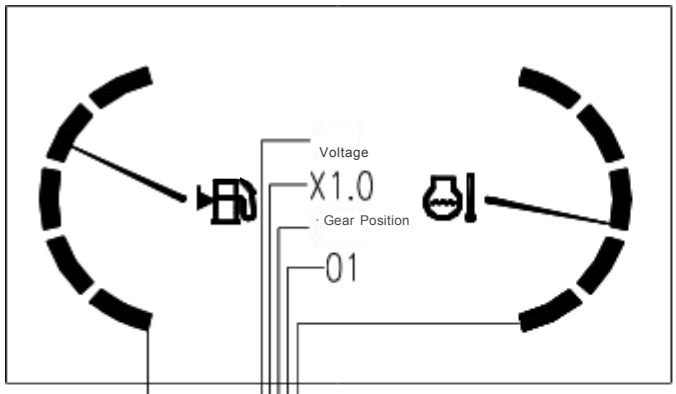

Engine Coolant Temperature Gauge. When the engine's coolant temperature exceeds safe limits, the machine alarm area indicates an alarm. Gear Position Display Value.

Throttle Gear Position.

Voltage Display

Value.

Current system voltage, measured in volts.

Fuel Level Gauge. When the fuel level is low, the machine alarm area will indicate an alarm.

Fig.13.04

Main Instrument Display Screen 八 声 号 面

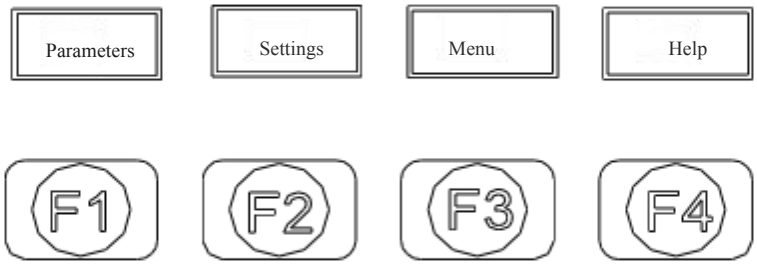

Fig.13.05

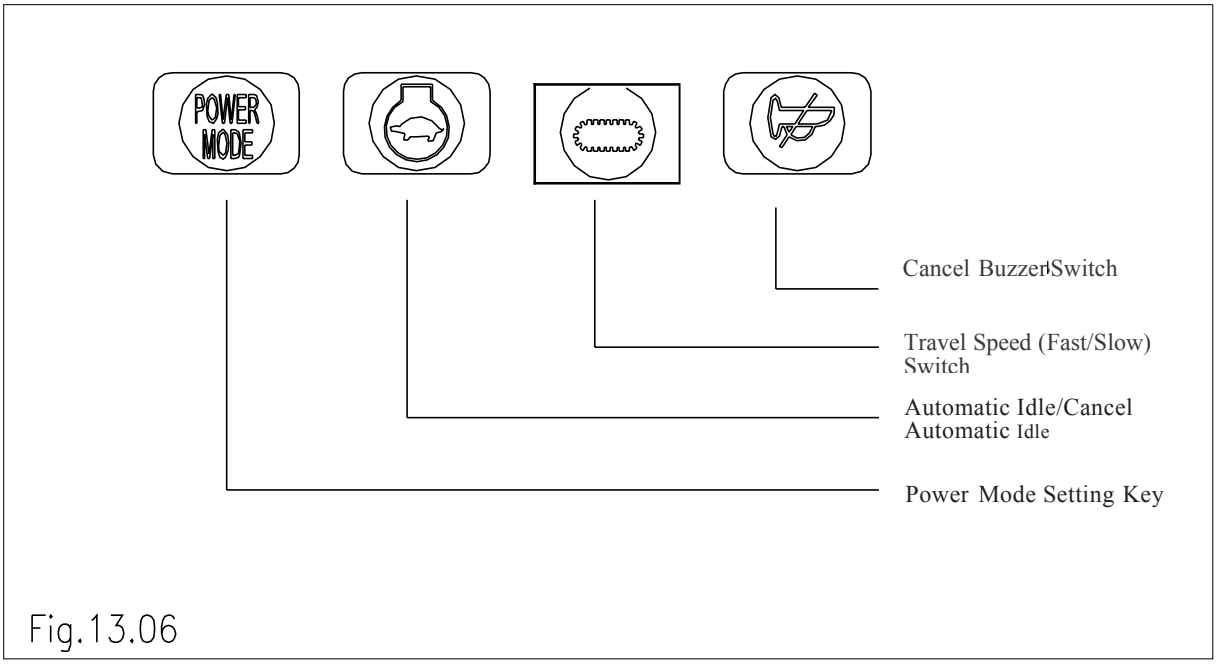

Fig.13.06

Function Selection Key and Alarm Indicator Light

When operating the function selection key, the outcome of the selection can be determined by observing the display in the machine status area.

Alarm Indicator Light: Whenever there is an alarm displayed on the monitor, the red alarm indicator will illuminate.

B. Display During Instrument Operation

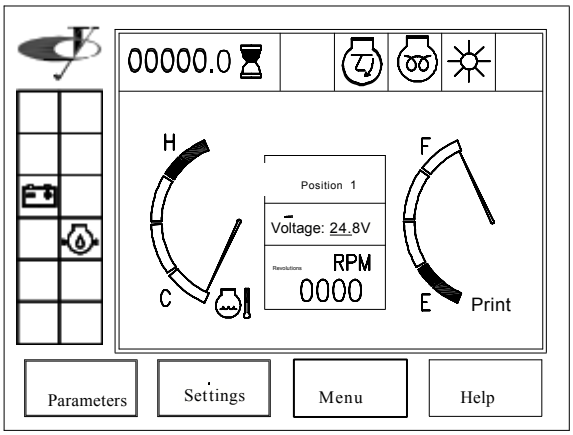

Turn on the power. Under normal conditions, the main monitoring screen of the machine is displayed as shown in the left image. After the engine starts, the power voltage alarm and the low engine oil pressure alarm indicators will disappear. Begin timing.

Engine Oil Pressure	0700	KPa
Fuel Level	100	%
Engin Speed	1015	RPM
Coolant Temperature	040	°C
Hydraulic Oil Temperature	025	°C
Working Time	00000.0	h
Phase Working Time	0000.0	h

Press the button to select 'Parameters' to monitor the lisplay.

Machine Operating Data.

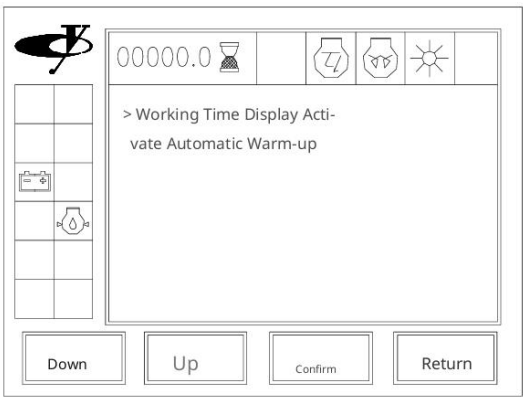

Press the button to select 'Settings' to display the system settings menu.

Use 'Up' and 'Down' to select menu items, and use 'Confirm ' to change options. The options include:

1. Display of work time / phase work time;

2. Activate automatic warm-up / deactivate automatic warm-up; if the automatic warm-up function is deactivated, the warm-up status icon will not be displayed.

(Press 'Return' to return to the main monitoring screen.)

By pressing the selection button, choose 'Menu', and the beyond the set alarm values, the monitor will issue an alarm message.

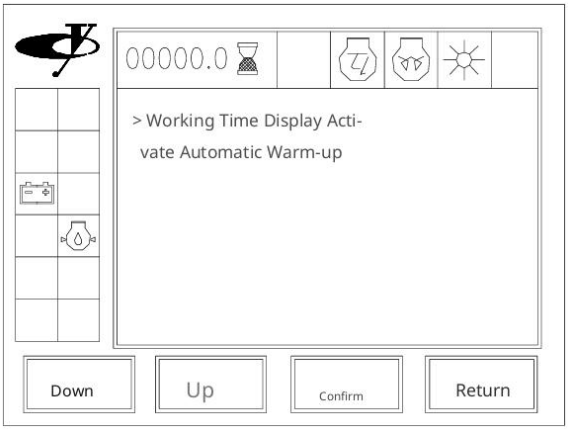

3. Select 'User Settings' to access the User Settings

menu: this section primarily involves setting the user password and resetting the stage timer.

4. Select 'System Settings' to access the System Settings menu; this option is intended solely for factory debugging purposes and will be omitted here.

5. Select 'English' to change the option by pressing 'OK': English / Chinese, allowing the monitor to be configured to display in either Chinese or English mode.

Engine Oil Pressure	100	KPa %
Fuel Level Alarm Cooling	015	℃ ℃
Liquid Temperature Alarm	103	V
Hydraulic Oil Temperature Alarm	090	V
High Voltage Alarm	28. 6	
Low Voltage Alarm	26. 1	
Flywheel Tooth Count Setting	130	

When 'Alarm Parameters' is selected, the machine's preset alarm settings will be displayed.

(This parameter is set before the machine is shipped from the factory.)

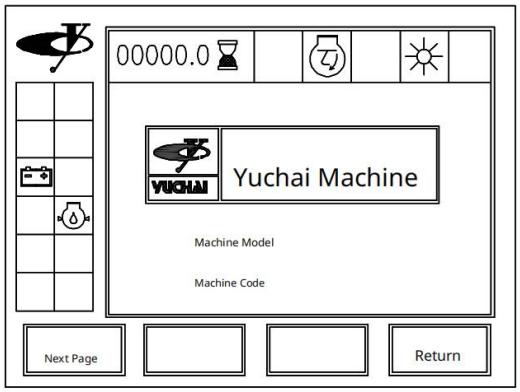

By selecting the 'Help' button, the monitor will display the system's help information this primarily shows the machine model and machine code, while 'Next Page' displays the version numbers of the monitor's hardware and software.

Right Control Box Panel Switch Group

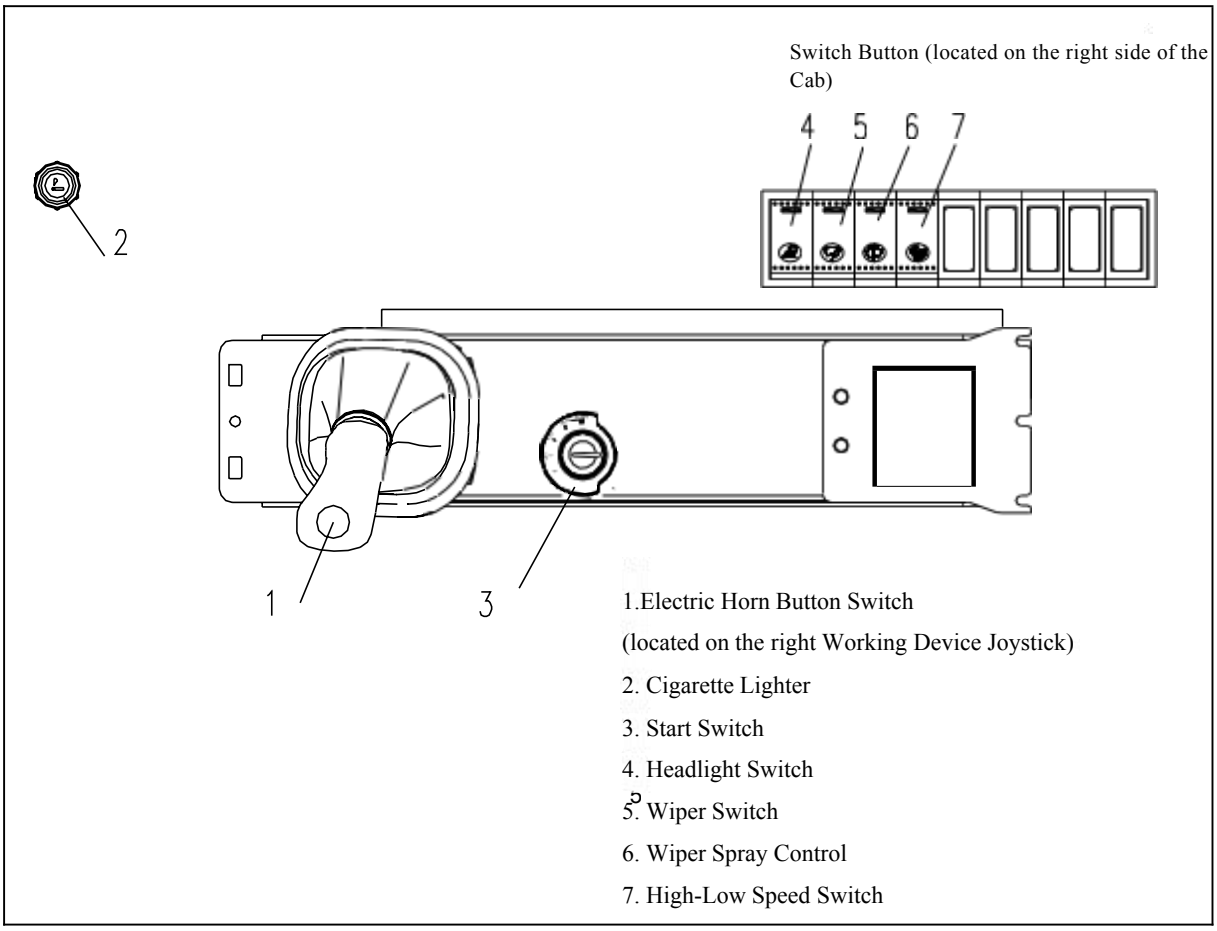

1. Electric Horn Button Switch

When the electric horn button switch at the top of the right Working Device Joystick is pressed, the horn will sound.

2. Cigarette Lighter

You may either connect the cigarette lighter component directly or use the cigarette lighter cable to supply power to other electrical devices.

Note: The total current capacity provided must not exceed 10A.

3. Start Switch

This switch is used to start or stop the engine and has four positions.

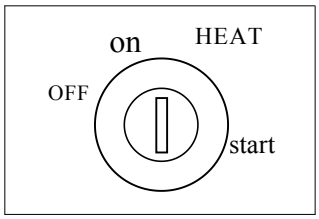

OFF Position

The key can be inserted or removed when all switches in the electrical system are off and the engine is not running.

ON Position

When the engine is running, the ignition switch key should be kept in the ON position.

START Position

This is the position for starting the engine. When starting the engine, keep the key in this position.

Once the engine starts, immediately release the key; it will automatically return to the ON position.

HEAT Position

When the engine starts, in winter, turn the key to this position. When the key is in the HEAT position, the preheat indicator light will illuminate. After preheating is complete, release the key; it will automatically return to the ON position. Then, turn the key to the START position to start the engine.

4. Work Light Switch

The boom light and the front light switch located at the top of the cab can be activated by pressing the toggle switch; the side with the switch symbol indicates ON, while the opposite side indicates OFF.

5. The dual-speed wiper switch controls the front window wiper.
This toggle switch has two positions.

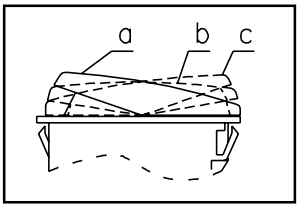

a) OFF: The wiper is not operational.

b) ON: The wiper operates at a slow speed.

c) ON: The wiper operates at a fast speed.

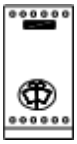

6.Windshield washer switch.

To activate the washing function, press the toggle switch; the side marked with the switch symbol indicates ON, while the opposite side indicates OFF.

7.Spare switch.

Caution: Please do not turn on all the lights simultaneously.

Left Control Box Panel Switch Group.

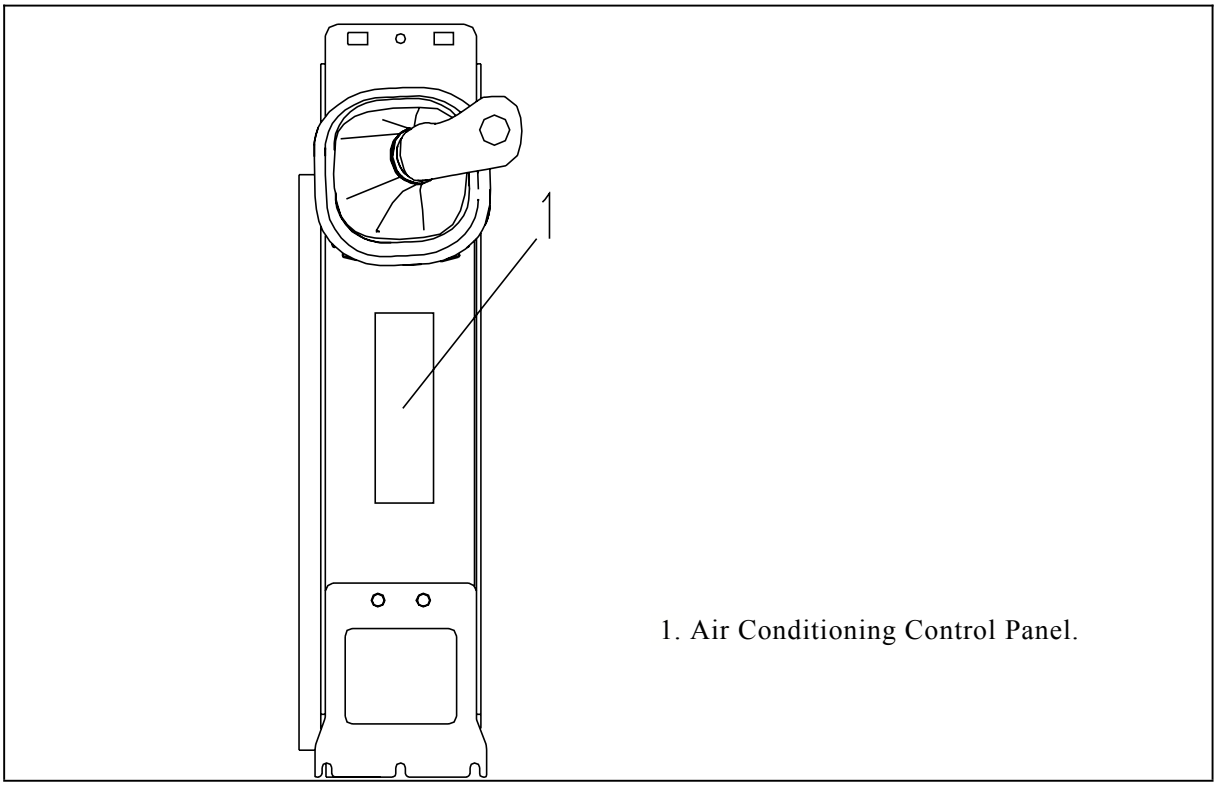

1. Air Conditioning Control Panel

Please refer to the 'Air Conditioning Control' section.

Safety Lock Component.

1. Safety Lock.

> Warning: The safety locking mechanism of the working device is a critical component of the machine's safety system. When the operator leaves the cab, the safety lock must be engaged. If the left control box safety lock handle is not in the locked position, the handle may move, causing the working device or platform to operate, which could result in an accident.

Pilot Valve Lock

Rotate the safety lock handle of the left control box to the vertical position. This will prevent the pilot system's main control from supplying oil, thereby disabling the machine's working device, platform rotation, and other functions, thus providing a safety protection mechanism.

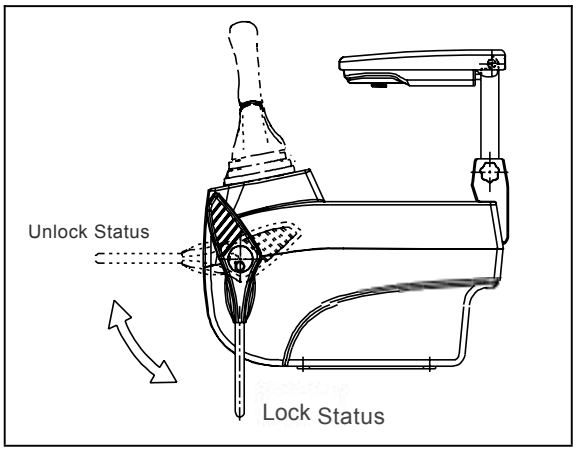

Pilot Valve Unlock

Rotate the safety lock handle to the horizontal position; this will connect the pilot system with the hydraulic source, allowing the machine to operate normally.

Operation of the Working Device and Rotation Mechanism

1. Operation of the Excavation Working Device and Platform Rotation Mechanism (Boom does not de- viate) Utilize the left and right working device control levers as indicated in the diagram on the right.

   A. Left Working Device Control Lever:

Bucket Arm Control: Extend the bucket arm forward and retract it backward.

Platform Rotation: Rotate the platform to the right when swaying right, and to the left when swaying left.

   B. Right Working Device Control Lever:

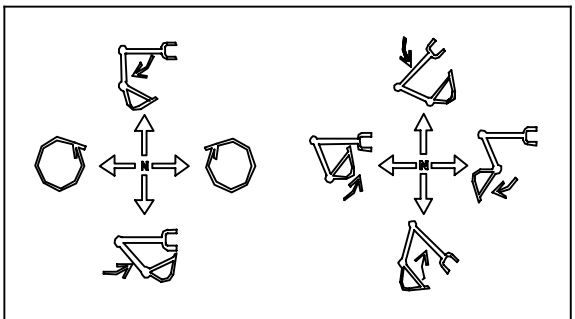

Boom Control: Lower the boom when pushing forward and raise it when pulling backward.

Bucket Control: The bucket tilts outward when swaying right and rotates inward when swaying left.

2. Operation of the Excavating Working Device and Platform Rotation Mechanism (with Offset Swing Arm Type).

A. Left Working Device Control Lever.

Bucket Arm Control: Extend the bucket arm forward and retract it backward

Platform Rotation: Rotate the platform the right when swinging to the right, and to the left when swinging to the left.

Boom Rotation: Rotate the boom to the right when swinging to the right, and to the left when swinging to the left.

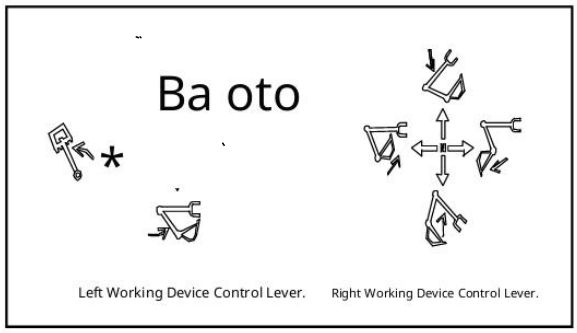

B. Right Working Device Control Lever.

Boom Control: Push forward to lower the boom and pull back to raise it.

When manipulating the bucket, it tilts outward when swinging to the right and inward when swinging to the left.

● Selection and operation of rotation and deflection.

For the boom deflection model equipped with a swivel head, it is necessary to first switch between the platform rotation and boom deflection modes using the toggle button on the left working device joystick, to select either the platform rotation function or the boom deflection function.

Under norma. conditions, the platform rotation mode can be directly operated using the left working device joystick to control the platform rotation.

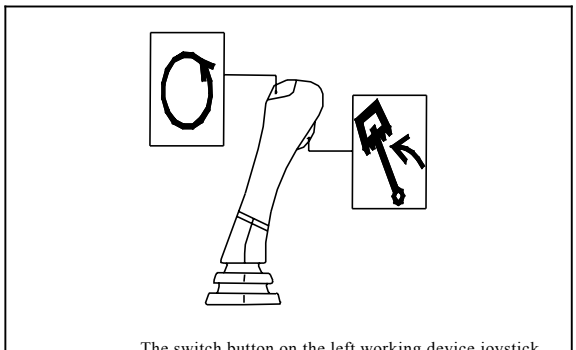

The switch button on the left working device joystick.

When the switch button is located above the left working device joystick is pressed, the joystick can be used to control the deflection of the steering head. Pressing the reset button on the left working device joystick will return it to the platform rotation mode.

3. Operation of the Bulldozer Blade.

Pushing the joystick downward causes the bulldozer blade to cut into the ground.

Pulling it upward raises the bulldozer blade.

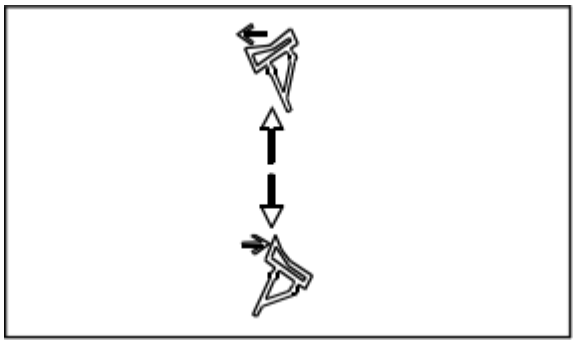

4. Operation of the Auxiliary Working Device.

When the machine is equipped with auxiliary working devices, the speed control and auxiliary operation pilot valve cover can be lifted forward. Pressing down on the pilot valve pedal will then activate the auxiliary oil source.

1. Direction Control

By manipulating the left and right traveling control levers, the machine's left and right tracks can be controlled for movement.

By operating one side of the control lever, the machine can achieve unilateral steering.

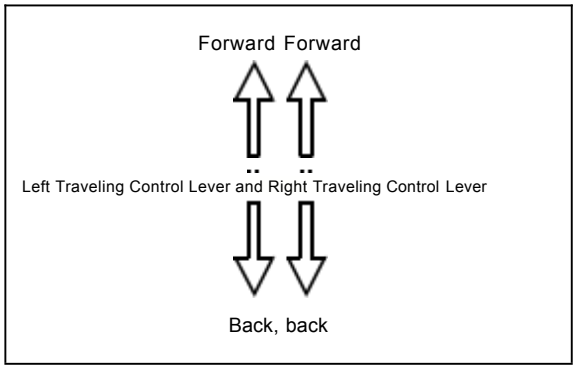

2. Speed Control

1) For models with standard configuration, speed control is achieved through the auxiliary control pilot valve. To engage high-speed traveling, lift the auxiliary control pilot pedal cover forward, and then press down on the pilot valve pedal cover.

2) When equipped with electronic intelligent speed control, the traveling speed is managed via the high and low-speed control buttons on the instrument panel, allowing for both high-speed and low-speed traveling modes.

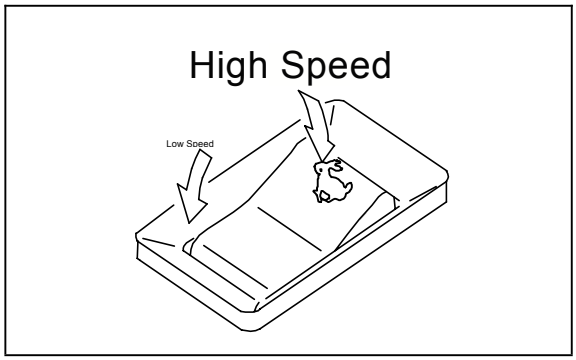

Mechanical throttle and electronic throttle

1. Mechanical Throttle (for mechanical throttle models)

Pull the engine throttle handle backward to increase the throttle. Before stopping the engine, ensure the handle is pushed fully forward.

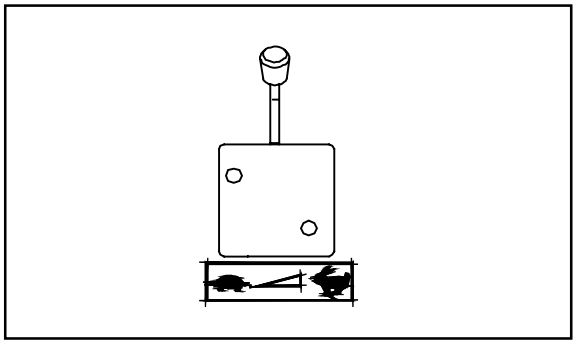

2.Electronic Throttle (for electronic throttle models)

Rotate the engine throttle knob to the right to increase the throttle. Before stopping the engine, rotate the throttle knob to the left limit position.

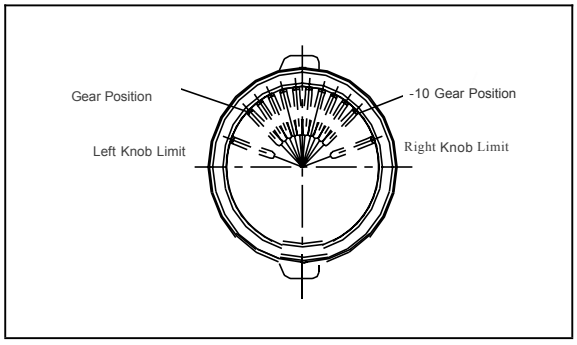

Driver's Seat

Warning: The machine may unexpectedly rollover or move suddenly, which can result in injury or even death. Therefore, for safety reasons, always remember to fasten the seat safety belt and adjust the seat before starting the machine.

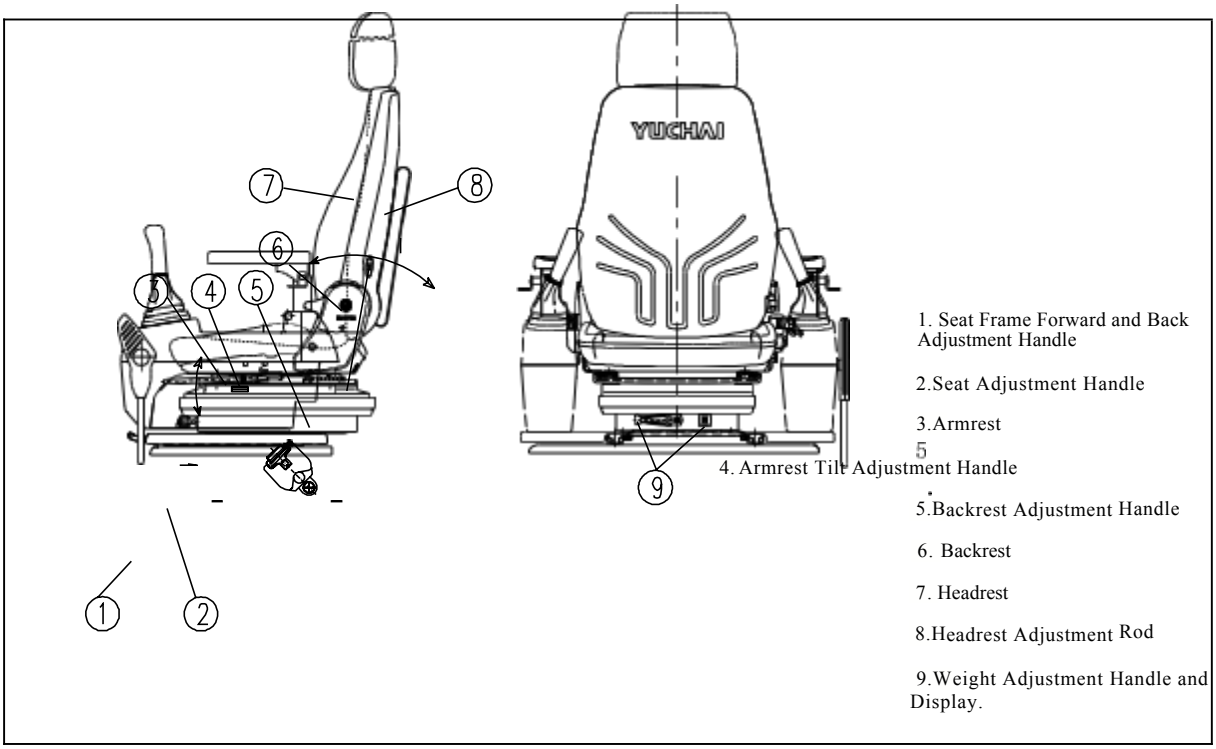

- Seat Fore-and-Aft Adjustment: Rotate the seat fore-and-aft adjustment handle to allow movement of 0 to +75mm in five increments. Release the handle to secure the seat in place .
- Backrest Adjustment: Pull up the backrest adjustment handle to adjust the backrest to one of five positions. Release the handle to secure the backrest in place.
- Headrest Adjustment: Move the headrest adjustment handle backward, then push or pull the headrest to the desired position.
- Armrest Tilt Adjustment: Rotate the armrest tilt adjustment handle to modify the tilt of the armrest.

Note: The machine must be turned off when adjusting the seat. After making adjustments, gently shake the seat to ensure it is securely locked.

Safety Belt

Warning: The safety belt is a crucial component of the machine's safety system. It must be fastened before operation. Failure to fasten the safety belt may result in the cab or machine crushing your body during a rollover, leading to serious injury.

Warning: Before using the safety belt, ensure that its installation is free from abnormalities. If the safety belt is worn or damaged, it must be replaced. Even if no abnormalities are observed in the safety belt, it should be replaced every three years. The production date of the safety belt is indicated on the factory date label.

- During operation, it is imperative to wear the safety belt.
- When fastening the safety belt, ensure that it is not twisted.

1. Secure the safety belt.

Hold the safety belt clip, check for any twists, adjust the length of the safety belt, and then firmly insert it into the buckle. Gently pull on the safety belt to ensure it is properly locked.

2. Remove the safety belt.

Press and hold the red button to unclip the tongue, allowing the safety belt to be removed.

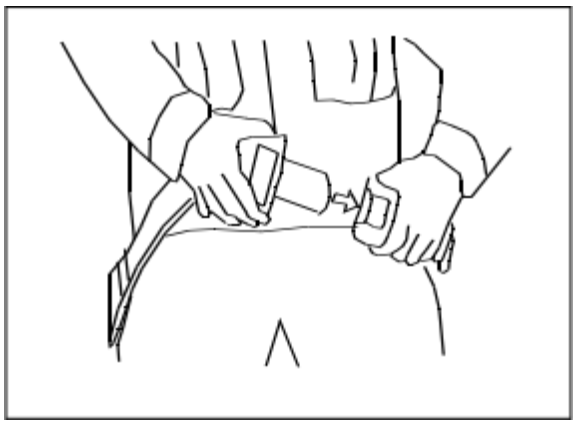

Air Conditioning Control

The air conditioning control panel is located on the left control box panel switch group.

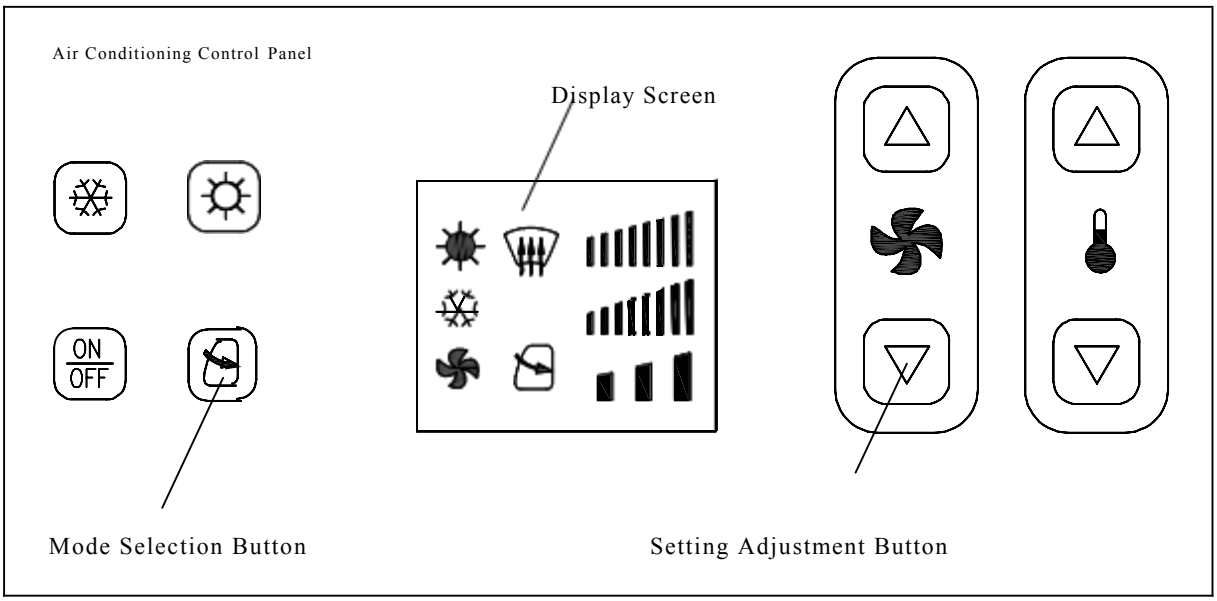

1. Key Functions and Basic Operations

Power switch

When pressed, the air conditioning system is powered, the screen backlight is turned on, the fan runs at low speed for 3 seconds (no other operations are accepted during this time) and then resumes. Press this key again when the power is on to memorize the current working state (cooling/heating/defrosting, fan speed, cooling and heating setting values), and turn off the power.

Cooling button

Press this button in ventilation mode to memorize the current state (wind speed setting value) and the system enters cooling mode. restore the last cooling state parameters (cooling capacity setting value, wind speed setting value).

Press this button in cooling mode to memorize the status (cooling capacity setting value, wind speed setting value) and cancel the cooling mode.

(Middle row) The graphic disappears 、 and the system enters the last ventilation state (wind speed setting value).

Press this button in defrost mode to memorize the current status (heating setting value, wind speed setting value), cancel defrost mode, and the system enters Heating mode. The graphic 、 disappears and the system enters the last heating state (heating setting value)

Hot Key

value) and the system enters heating mode.

The (Upper row) graphic disappears, and the system enters the last ventilation state (wind speed setting value).

Press this button in cooling mode to memorize the current status (cooling capacity setting value, wind speed setting value) and the system enters defrost mode. (Upper row) The graphics 、 disappear and the system enters the last ventilation state (wind speed setting value).

Press this button in cooling mode to memorize the current status (cooling capacity setting value, wind speed setting value) and the system enters defrost mode.

(middle row) and restore the last defrosting status (heating amount setting value, wind speed setting value.

Press this button in defrost mode to memorize the current status (heating setting value, wind speed setting value) , cancel defrost mode, and the system enters Cooling mode. Screen **chapter** **(** upper row), the graphic disappears,

and the system enters the last cooling state (cooling capacity setting value, wind speed setting .

Cycle wind key

Press this button and the system will enter the in external circulation mode, external circulation mode. The screen displays press this key again to the external circulation mode is canceled and the system enters the internal circulation mode.

Increase setting key

In cooling mode, the screen displays the screen to increase the cooling capacity. In heating or defrosting (cooling and heating work at the same time mode, it means to increase the heating capacity, and the screen displays Each time you press the key, the number of bars increases by 1.

Decrease setting key

In cooling mode, it means to reduce the cooling capacity. The screen displays In heating or defrosting (cooling and heating work at the same time) mode, it means to reduce the heating capacity, and the screen displays Each time you press the key, the bar will decrease by 1.

Press this button to increase the speed of wind. The screen will display **clouds.** The wind speed increases by 1 level.

Press this button to reduce the speed of wind. The screen will display **a** grid and the wind speed will increase or decrease by 1 level.

2. Application of Special Operations

1) Forced Cooling Operation

In hot climatic conditions, particularly during the initial period after starting the air conditioning, this operation should typically be selected. The procedure is as follows: select the cooling mode, press the 'Increase Wind Speed' key to choose the maximum wind speed, and press the 'Increase Setting' key to select the maximum cooling capacity.

2) Weak Cooling Operation

In slightly warm climatic conditions, particularly after running the air conditioning for a while when the indoor temperature is already comfortable or even slightly cool, this operation should generally be selected.

The procedure is as follows: select the cooling mode, press the 'Decrease Fan Speed' button to set the fan speed to the minimum, and press the 'Decrease Setting' button to select the minimum cooling capacity.

3) Forced Heating and Defrosting Operation

In cold climatic conditions, especially during the initial period after activating the heating, as well as when it is necessary to remove frost from the exterior of the glass, this operation should generally be selected. The procedure is as follows: select the heating mode, press the 'Increase Fan Speed' button to set the fan speed to the maximum, and press the 'Increase Setting' button to select the maximum heating capacity.

4) Heating Operation

In slightly cold climatic conditions, particularly after using the heating for a period, when the indoor temperature is already comfortable or even warm, this operation should generally be selected. The procedure is as follows: select the heating mode, press the 'Decrease Fan Speed' button to choose the minimum fan speed, and press the 'Decrease Setting' button to select a lower heating output.

5) Dehumidification and Defogging Operation

In humid climatic conditions (including water vapor exhaled by the human body and perspiration), when the indoor temperature exceeds the outdoor temperature (including when using heating), in addition to the discomfort caused by indoor humidity, a layer of fog typically forms on the inner side of the glass, impairing visibility. In such cases, this operation should usually be selected.

There are two methods for this operation:

3.Other Instructions

①.Prolonged use of the internal circulation (with the screen not displaying graphics) may cause the indoor air to become stale and unable to refresh; however, prolonged use of the external circulation (with the screen displaying graphics) will result in a partial loss of cooling or heating. Therefore, operators should use this feature judiciously.

This machine is configured such that whenever the system operating mode is changed or the machine is powered off, the system will automatically close the external circulation damper (entering internal circulation mode). If the operator needs to utilize the external circulation function after changing the operating mode or just starting the machine, it only be effective by pressing the buttoner .

The machine will automatically memorize any changes made to the operation mode and settings, except for the circulation wind mode. This includes automatically remembering the state prior to shutdown (both mode and settings). When you use the mode again, the machine will automatically restore the previous settings (including restoring the state prior to shut down after powering on).

This feature is very convenient for users; for example, when you power on in the morning, it automatically restores the usage state from when you powered off the previous evening; after a break, it automatically restores the usage state from before the break; and when you power on in the afternoon, it automatically restores the usage state from when you powered off in the morning.

Radio

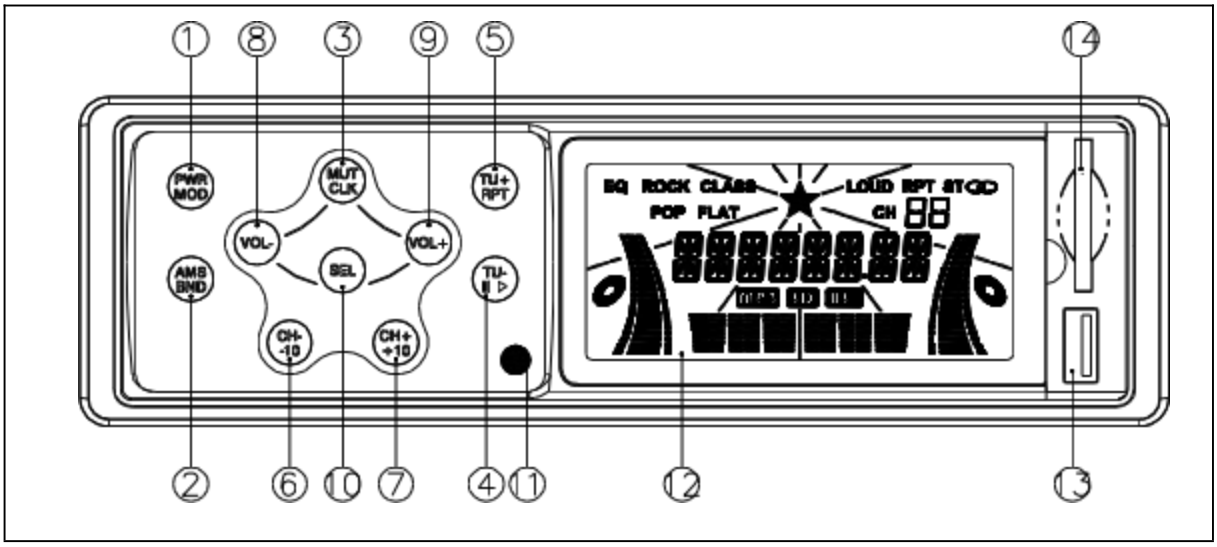

Radio Operation Instructions

1. PWR / MODE: Power Switch and Radio, Mp3 Conversion

   When the power of this device is off, press this button or insert an SD / MMC card or USB to turn the power on.

   After powering on:

   Press and hold to turn the power of this device on.

   Press briefly to switch between Radio and Mp3 (USB, SD).

2. AMS / BAND: Automatic Station Search and Band Switching, Display Mp3 Information and Track Search Radio Status:

   Press this button briefly to switch between FM and AM.

   Press and hold this button to automatically search for and store radio stations. (You can store up to 31 stations for both FM and AM)

   Mp3 Status:

   Press briefly to display the information of the Mp3 song. (Only Western characters are supported for display)

   Press and hold to enter track search mode. Use key 8 (VOL-) or key 9 (VOL+) to select the previous or next track, key 6 (CH-) or key 7 (CH+) to skip forward or back- ward by ten tracks, and key 5 (TU+) or key 4 (TU-) to go to the first or last track. After selecting the desired track number, press this button again to confirm.

3. C LK / MUTE -- Mute Time Display, and Adjustment

   Radio / Mp3 Status:

   Press briefly to mute the entire unit.

   Press and hold to display the time. When the time is displayed, press and hold again to enter the time adjustment mode, at this point, the minutes will flash. If you press briefly again, the clock will flash, then use button 8 (Vol-) or button 9 (Vol+) to decrease or increase the clock or minutes.

4. TU - / —— Manual tuning, automatic station search, Mp3 track selection, and start or pause playback

Radio Status:

Press briefly to manually tune down.

Press and hold to automatically search down.

Mp3 Status:

Press briefly to play the previous track.

Press and hold to start or pause the playback of Mp3 songs. Use key 2 (AMS/BAND) to search for Mp3 tracks.

5.TU + / RPT-- Manual tuning, automatic search, Mp3 selection, and repeat playback. Radio Status:

Press briefly to manually tune up.

Press and hold to automatically search up. Mp3 Status:

Press briefly to play the next track.

Press and hold to display 'RPT' on screen 12, indicating single track repeat playback; if 'RPT' is not displayed, it indicates repeat playback of all songs.

Use key 2 (AMS/BAND) to search for MP3 tracks.

6. CH - / - 10—— Select station, store station, and quickly select MP3 tracks.

Radio status:

Press briefly to select the previous memory station.

Press and hold to enter the store station mode, during which the station number will flash on the display. Then, briefly press key 7 (CH +) or key 6 (CH -) to increment or decrement the station number or press and hold to continuously adjust the station number. Select the station number you wish to store, and after 3 seconds, the frequency will be automatically saved to the selected station number.

Mp3 Status:

Decrease the track number by 10.

7. CH + / + 10 ** Quick selection of stations, storage stations, and Mp3 tracks. Tuning status:

Short press to select the next memory station.

Long press to enter storage mode, at which point the station number will flash. Then, short press button 7 (CH +) or button 6 (CH-) to increase or decrease the station number or long press to continuously adjust the station number. Select the station number to be stored, and after 3 seconds, the frequency will be automatically saved to the selected station number.

Mp3 Status:

Increase the track number by 10.

8. VOL + — Increase Volume, Function Selection Settings.

Press this button to increase the volume.

Long press to continuously adjust.

Use in conjunction with SEL for function settings.

9.VOL - — Decrease Volume, Function Selection Settings. Press this button to decrease the volume.

Long press to continuously adjust.

Use in conjunction with SEL for function settings.

Use key 2 (AMS/BAND) to search for MP3 tracks.

10. SEL Function Settings (Used in conjunction with button 8 VOL - and button 9 VOL +).

Short press to enter the sound effect menu, cycling through VOL BASS → TRE → BAL. Then, use button 8 (VOL -) and button 9 (VOL +) to adjust the values.

VOL — Volume, BAS — Bass, TRE — Treble, BAL — Left/Right Balance.

Press and hold to enter the system menu, then briefly press the SEL key to cycle through the menu. Use key 8 (VOL-) and key 9 (VOL+) to adjust the values.

VOL LAST / ADJ: Select the power-on volume mode; LAST refers to the last volume value, while ADJ is the default power-on volume value.

BEEP ON / OFF: Toggle the beep function on or off.

HOUR 12/24: Time display mode, either in 12-hour or 24-hour format. LOUD ON / OFF: Toggle the loudness setting on or off.

DSP OFF / FLAT / ROCK / POP / CLASSIC: Set the sound effect mode.

DSP OFF—turns off; FLAT—normal; ROCK—rock; POP—pop; CLASSIC—classical.

Clear the data saved on this machine, restore it to factory settings, and turn off the power.

11. Remote Control Window

12. Display Screen

Displays information related to radio reception and MP3 playback.

13. USB Socket

After inserting the USB drive, this machine will search for all songs on the USB drive and begin playback.

14. SD / MMC Card Slot

After inserting the SD / MMC card, this machine will search for all songs on the card and begin playback.

Supports MP3 and WMA formats, allows direct playback of up to 8 folders (including subdirectories), and supports continuous playback of up to 512 tracks.

Note 1: The excavator has not utilized the clock function of the radio.

Note 2: Due to variations in radio models, the operation panel may differ slightly.

Door and Window

1. Cab Door

The excavator door is the sole pathway for the operator to enter and exit. When the operator leaves the cab, the door must be locked.

When the cab door is open, please secure it to the door catch to prevent injury to others. When it is necessary to close the door, press down on the door catch lever to release it, allowing the cab door to rotate.

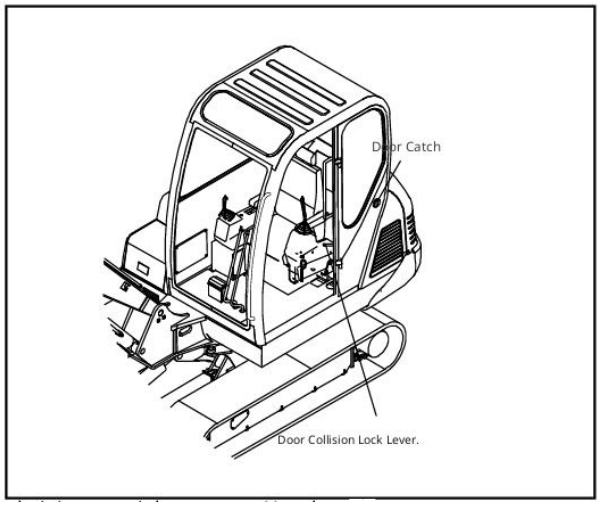

2. Rear Window

The rear window can serve as an emergency exit. If, for any reason,

the cab door cannot be opened, and the operator is trapped inside the cab, it is essential to escape. Use the Emergency Hammer to strike the rear window glass forcefully until it shatters, then exit through the opening .

3.Front Window (Flip Window)

Opening the flip window allows the operator to gain improved visibility and enhances air circulation.

To open the flip window (front window), you must first pull the locking handles on both sides of the flip window. By operating the handle of the flip window lock, you can slide the flip window up and down. Once the flip window is in the desired position, push it upward to the locked position, release the locking handle, and secure the flip window.

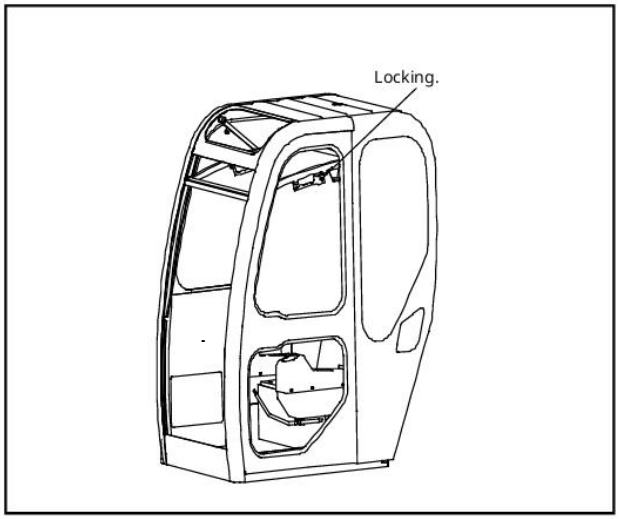

Conversely, you can operate to lower the flip window.

4

Operational Guidelines.

Preparation Before Operating the Machine.

1) The excavator must be operated by trained operators who comply with the specific requirements for operators in their respective regions before they can operate independently.

2) Operators are strictly prohibited from operating the machine until they have thoroughly read the user manual.

3) Operators must wear fitted and appropriate clothing, as well as relevant safety protective equipment suitable for the work, such as safety helmets, safety shoes, gloves, protective eyewear, and safety belts, before operation.

4) Before starting the machine each day, carefully check the operational requirements.

5) Inspect the working device, oil cylinders, and hoses for any signs of damage.

6) Remove dust and debris from around the engine, radiator, and battery.

7) Check the hydraulic system, oil tank, hoses, and joints for any oil leaks (this can be done by observing for any noticeable oil stains on the ground where the machine was parked).

8) Inspect all components of the lower chassis (tracks, drive wheels, guide wheels, etc.) for damage, and ensure that no bolts are loose. Confirm that the bolts connecting the chassis to the platform are secure.

9) Verify that all instruments and monitoring devices are free from damage.

10) Clean the rearview mirror, check for any damage, and adjust the angle to ensure proper visibility.

11) Inspect the seat belt for any signs of damage.

12) Confirm that maintenance has been conducted correctly in accordance with the specified requirements.

Warning: Before operating the machine, ensure that you fully understand and have memorized the relevant safety procedures for operating the machine as outlined in this user manual.

Engine Operation

Warning: Before starting the engine, please refer to the safety details in this user manual. Read all safety labels on the machine. No other individuals should be present in the work area. Prior to operation, it is essential to learn and practice safe operating procedures. When operating the machine, it is crucial to clearly understand and adhere to the relevant sections regarding operation and maintenance in the manual, as well as to comply with applicable regulations.

1. Pre-Start Checks for the Engine

1)Ensure that the safety belt is securely fastened, sound the horn, and verify that there are no individuals in the work area surrounding or above and below the machine.

2) Verify that the windows and rearview mirrors provide a clear field of vision.

3) Inspect the area surrounding the engine, battery, and radiator for dust or debris; if any is found, please remove it.

4) Examine the working device, oil cylinders, connecting rods, and hydraulic hoses for cracks, excessive wear, or play. Any abnormalities detected should be replaced or repaired.

5) Inspect the hydraulic system, hydraulic oil tank, hoses, and joints for any signs of oil leakage.

6) Inspect the lower chassis (including the track, sprocket, idler, etc.) for any signs of damage, wear, loose bolts, or oil leaks.

7) Verify that the instrument display is functioning correctly, that all work lights are operational, and that there are no open circuits or disconnections in the electrical wiring.

8) Ensure that the coolant level, fuel level, hydraulic oil level, and engine oil level are all within the specified upper and lower limits.

9) In cold weather, it is essential to check whether the coolant, fuel, hydraulic oil, battery electrolyte, engine oil, and lubricating oil are frozen. If any of these fluids are frozen, they must be thawed before attempting to start the engine.

10) Verify that the left control box is in a locked position.

11) Assess the machine's current working condition, direction, and position to provide relevant information for operation.

2. Start the engine.

Warning: Do not start the engine when a warning sign prohibiting engine start is attached to the control handle.

Warning: Before starting the engine, ensure that the safety lock handle is in the locked position to prevent accidental contact with the control lever during startup, which could cause the working device to move suddenly and result in an accident.

Warning: If the battery electrolyte is frozen, do not charge the battery or start the engine using a different power source. Doing so poses a risk of the battery catching fire. Before charging or starting the engine with an alternative power source, ensure that the battery electrolyte has thawed, and check for any freezing or leakage of the battery electrolyte prior to starting.

Before starting the engine, insert the key into the ignition switch and turn it to the ON position. Check the status of all indicator warning lights dis-played on the digital combination instrument. If any alarms are detected, perform the necessary troubleshooting before starting the engine.

A. Normal Temperature Engine Start

Turn the key clockwise to the ON position; when the alarm indicator light goes out, it indicates that the machine can start normally. Continue turning to the START position and hold it for no more than 10 seconds. After the engine starts, release the key, which will automatically return to the ON position. If the engine fails to start, you must wait 1 minute before attempting to restart.

Note: Continuous starting time should not exceed 10 seconds; the interval between two starting attempts should not be less than 1 minute. If the engine fails to start three consecutive times, check whether all systems of the engine are functioning normally.

Warning:
1) Do not turn the key while the engine is running, as this may cause damage to the engine.
2)Do not start the engine while towing the excavator.
3) The engine must not be started by short-circuiting the starter motor circuit.

- Start the engine using an auxiliary cable.

> Warning: If the battery electrolyte is frozen, attempting to charge it or jump-start the engine may cause the battery to explode. To prevent the battery electrolyte from freezing, ensure it is kept fully charged. Failure to adhere to these instructions may result in injury to yourself or others.

> Warning: The battery can generate explosive gases. Keep away from sparks, flames, and fireworks. When charging or using the battery in enclosed spaces, ensure proper ventilation, and wear goggles when working near the battery.

If the method for connecting the auxiliary cable is incorrect, it may result in the battery exploding. Therefore, please adhere to the following guidelines.

1) When using the auxiliary cable to start the engine, the operation must be conducted by two individuals (one person seated in the operator's seat and the other handling the battery

When starting another machine, do not allow the two machines to come into contact.

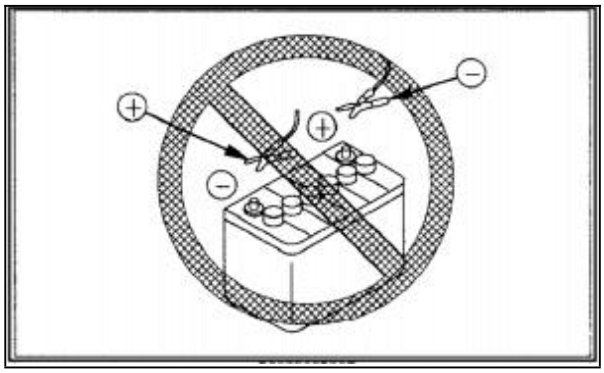

2) When connecting the auxiliary cable, ensure that the key switches of both the operational machine and the faulty machine are turned to the OFF position.
Failure to do so may result in the machine moving when the power is turned on.

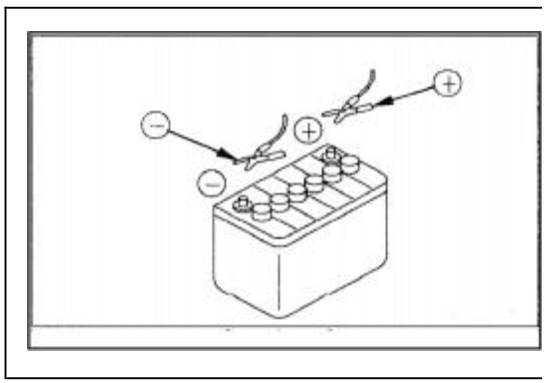

3) When installing the auxiliary cable, always connect the negative terminal (-) of the battery last; when disconnecting the auxiliary cable, the negative terminal (-) cable of the battery should be disconnected first.

4) When disassembling the auxiliary cable, ensure that the auxiliary cable clamps do not come into contact with each other or with the machine.
5) When starting the engine with the auxiliary cable, it is imperative to wear safety goggles and rubber gloves.
6) When connecting a normal machine to a faulty machine using the auxiliary cable, ensure that the normal machine's battery voltage matches that of the faulty machine.

3. After starting the engine:

A. Warm up the engine and allow the machine to reach operating temperature.
The normal operating temperature for the hydraulic oil is between 50 °C and 80 °C. Operating with hydraulic oil at temperatures below 20 °C can damage the hydraulic components. Therefore, before commencing work, if the oil temperature is below 20 °C, the following preheating procedure must be adhered to.

1)Operate the engine at a speed greater than idle (200 rpm) for 5 minutes.
2)Set the engine throttle to the mid-position and run for 5 to 10 minutes.
3)At this speed, extend and retract each oil cylinder several times, and gently operate the swing and traveling motors to preheat them. Work may only begin when the oil temperature exceeds 20 °C. If necessary, the bucket oil cylinder can be extended or retracted to its full stroke to fully load and preheat.

The hydraulic oil, but each operation should not exceed 30 seconds. This process may be repeated until the oil temperature requirement is satisfied.

B. Checks After Starting the Engine.

1)Verify that all indicator lights are extinguished.

2)Inspect for any oil leaks (lubricating oil, fuel) and signs of water leakage.

3)Assess the machine for any unusual sounds, vibrations, overheating, odors, and instrument readings. If any abnormalities are detected, immediate repairs are required.

4. Shut down the engine.
Note: Sudden shutdown of the engine before it has cooled down can significantly reduce its lifespan. Therefore, avoid turning off the engine abruptly except in emergency situations.

If the engine overheats, do not abruptly shut it down; instead, operate it at medium speed to allow the engine to gradually cool down before turning it off.

1) Allow the engine to run at idle for approximately 5 minutes to facilitate gradual cooling.
2) Push the throttle fully forward and pull the parking handle fully back.
3) Turn the key switch to the OFF position to shut down the engine. All indicator lights will turn off.
4) Remove the ignition key.

5.Inspection after engine shutdown.

1) Conduct an inspection of the working device, the exterior of the machine, and the chassis for any signs of water or oil leaks. If any abnormalities are detected, proceed with the necessary repairs.
2) Add fuel to the fuel tank.
3) Inspect the engine compartment for any paper scraps and debris. Remove any paper scraps and debris to prevent the risk of fire.
4) Clear any mud that is attached to the chassis.

Entering and Exiting the Machine

1) Ensure that your hand securely grips the handrail at the cab door as illustrated (indicated by the arrow in the image).

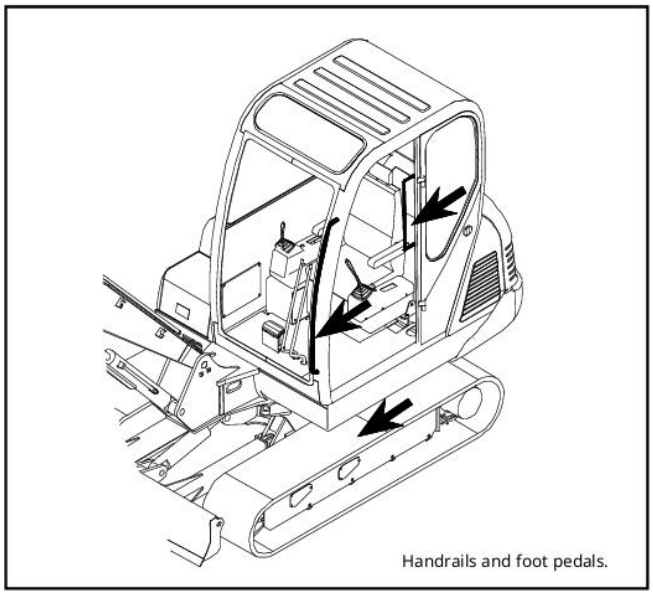

2) Ensure that your feet are firmly placed on the track.

3) When getting on or off the machine, do not use the handle as a handhold.

4) Before getting on or off the machine, you must confirm that there are no substances such as mud or grease on the handrails or the surface of the track that could cause slippage.
If any are present, please clean them thoroughly.

5) Do not jump on or off the machine; do not attempt to get on or off while the machine is in motion.

6) Before leaving the machine, you must lower the working device completely to the ground, then turn the safety lock handle to the locked position, ensuring that the entire machine is secured Turn off the engine and maintain this state until the next operation of the machine

Note: When leaving, please remove the key and lock all doors and windows.

Climbing on top of the fuel tank, engine cover, and cab is strictly prohibited.

Under no circumstances should anyone be on the working device (such as the bucket, arm, boom, and attachments).

Movement of the machine

1. Safety principles for operating the machine.

1) Before starting the excavator, familiarize yourself with the surrounding environment, including the presence of pedestrians, obstacles, and the load-bearing capacity of the ground.
2) Before starting the excavator, the horn must be sounded to alert others to pay attention.
3) It is strictly prohibited for the operator to stand on the ground while starting or operating the machine.
4) The excavator must travel and operate on solid ground that is at least 1.5 times its width.
5) When traveling through underground passages, bridges, or beneath high voltage electric wires, ensure that hand signal guidance is provided.
6) When traveling, the boom and arm must be lowered to maintain the optimal center of gravity.
7) When traveling, only the operator is permitted on the machine; no passengers are allowed.
8) Before operating the steering control lever, ensure to check the direction of the track frame.
9) If the bulldozer blade is positioned at the rear, the operation of the traveling control lever will be reversed.
10) Do not allow anyone in the vicinity of the machine.
11) Ensure that all obstacles are cleared from the machine's travel path.
12) The rear of the machine presents a blind spot; therefore, exercise special caution when reversing.

WARNING: Sudden changes in the joystick while traveling at high speeds can be dangerous.

1) Do not turn the joystick suddenly, otherwise it will cause a sudden start .

2) Avoid suddenly switching the joystick from forward to reverse (or reverse to forward).

3) Avoid sudden changes in the joystick, such as stopping suddenly from high speed (releasing the joystick).

Warning: Sudden changes to the handle during high-speed traveling can present a hazard.
1) Do not abruptly change the handle, as this may lead to sudden starting.
2) Avoid suddenly switching the handle from forward to reverse (or from reverse to forward).
3)Refrain from making sudden changes to the handle, such as abruptly stopping at high speed (by releasing the handle).

2. Preparation for Moving the Machine 1) Rotate the safety
lock handle on the left control box to the unlocked position.

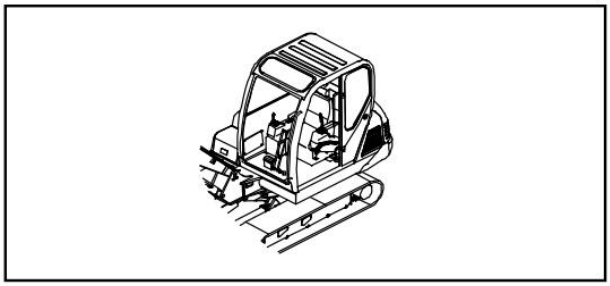

2) Pull (or turn)the throttle handle (throttle knob) to the high-speed position to increase the engine speed.

3. Move the machine forward.

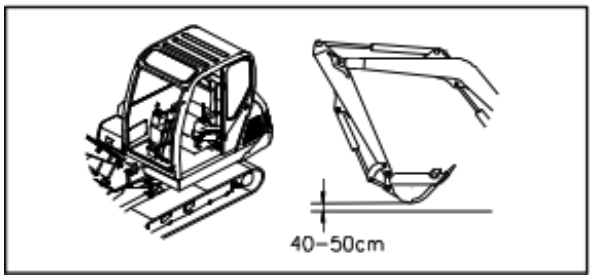

1) Adjust the control box to the free position, raise the working device, and lift it 40 to 50 cm above the ground.

2)Follow the steps below to operate the left and right traveling control levers. When the bulldozer blade is at the front:

Slowly push the front part of the control lever forward to move the machine.

When the bulldozer blade is at the rear of the machine:
Slowly pull the joystick back to make the machine travel.

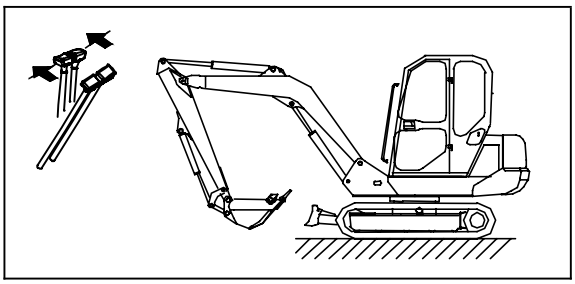

Note: 1.In low temperatures, if the machine's traveling speed is abnormal, a thorough warm-up operation must be performed. Additionally, if the lower chassis is obstructed by dirt, and the machine's traveling speed is abnormal, the dirt and debris on the lower chassis must be removed.

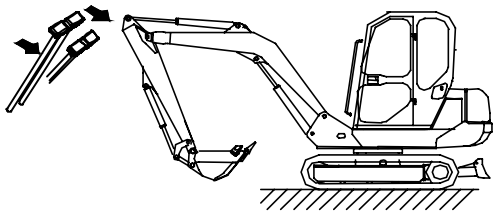

3.When the machine is traveling quickly and makes a sharp turn, slight swaying of the platform due to inertia is a normal occurrence.

4. Move the machine backward.

1)Adjust the control box to the free position, raise the working device, and lift it 40 to 50 cm above the ground.
2) The operation is opposite to the forward movement.

5. Stop the machine.

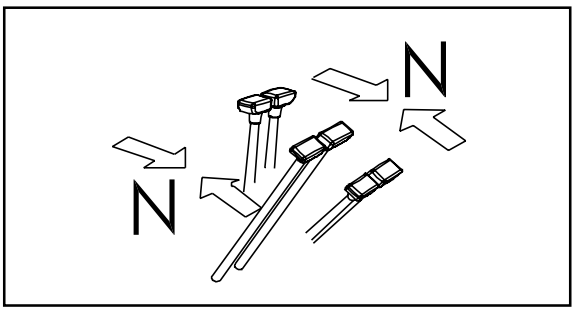

To stop the machine, place the left and right control levers in the neutral position.

Note: Avoid sudden stops of the machine while traveling ; ensure there is adequate space when stopping.

Machine Steering.

Note: Before operating the travel control lever, check the position of the bulldozer blade. If the bulldozer blade is at the rear, the operation of the travel control lever will be reversed.

Use the left and right traveling joysticks to change the direction of travel.

Whenever possible, avoid sudden changes in direction. This is particularly important when performing reverse rotation (turning in place); the machine must be brought to a complete stop before making a turn.

1. Steering when the machine is stationary.

To turn left:

When traveling forward, push the right traveling joystick forward, and the machine will turn left.

When traveling backward, pull the right traveling joystick back, and the machine will turn left.

When turning right, operate the left travel joystick in the same manner.

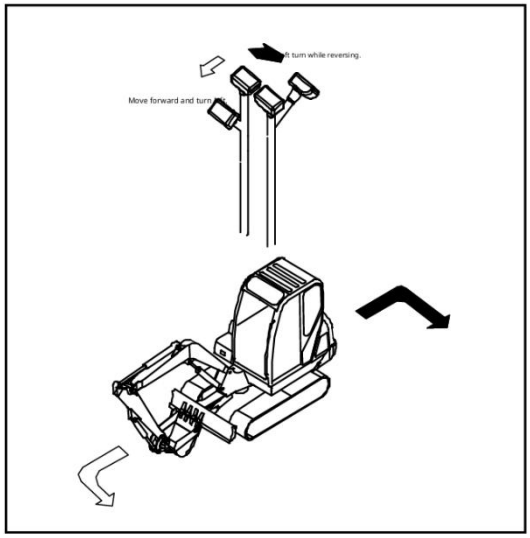

Pivot in place.

When performing a left pivot in place, pull back the left travel joystick and push forward the right travel joystick.

When performing a right pivot in place, pull back the right travel joystick and push forward the left travel joystick.

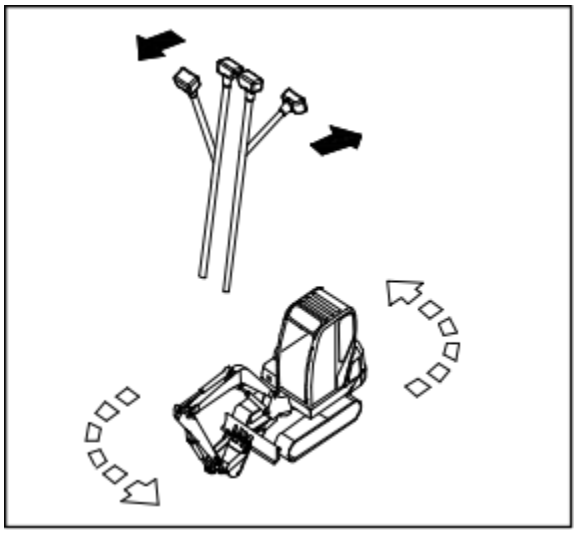

Rotation of the machine.

- Before rotating the upper structure, ensure that the surrounding area is safe.
- If the rotation joystick is operated quickly, the upper structure will rotate rapidly; if it is operated slowly, the upper structure will rotate gradually. Please pay attention to the speed of the joystick operation.

1) If the machine is equipped with a steering head, press the selection button on the eft working device joystick to ensure that the machine is in platform rotation mode.
2) Use the left working device joystick to perform the rotation operation.

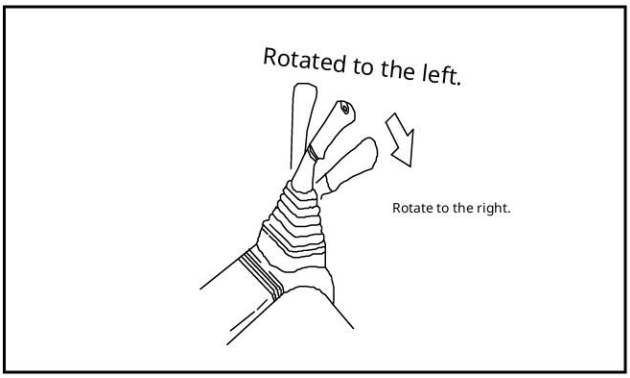

Operation of the working device.

If the joystick for the working device is operated quickly, the working device will move rapidly; conversely, if the joystick is operated slowly, the working device will move slowly.

The working device is controlled by the left and right pilot valves. The left pilot valve controls the boom and rotation (if equipped with a swing head, the left pilot valve can also control the swing of the head). The right joystick operates the arm and bucket. When the joystick is released, it will automatically return to the neutral position, and the working device will remain in its original position.

If the pilot valve is operated within 15 seconds of shutting down the engine, the working device can still be lowered to the ground.

Additionally, the pilot valve can be operated to release the residual pressure in the hydraulic oil circuit and to lower the boom after the machine is equipped with a trailer.

1. Bucket Control

By manipulating the left pilot valve, pushing forward extends the bucket, while pulling back retracts it.

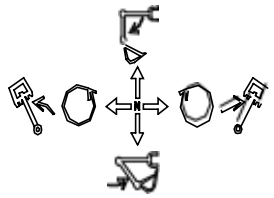

Left Working Device Control Lever.

2. Rotation Control.

By manipulating the left control pilot valve, the platform will turn left when tilted to the left and turn right when tilted to the right. For machines equipped with a swing function on the boom, it is essential to ensure that the machine is in a rotation state before initiating rotation.

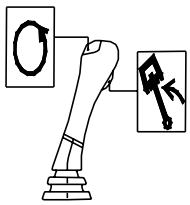

3. Boom Control.

By manipulating the right control pilot valve, pushing it forward lowers the boom, while pulling it back raises the boom.

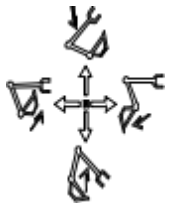

Right Working Device Control Lever.

4.Bucket Control.

By manipulating the right control pilot valve, tilting it to the right causes the bucket to spill, while tilting it to the left causes the bucket to retract.

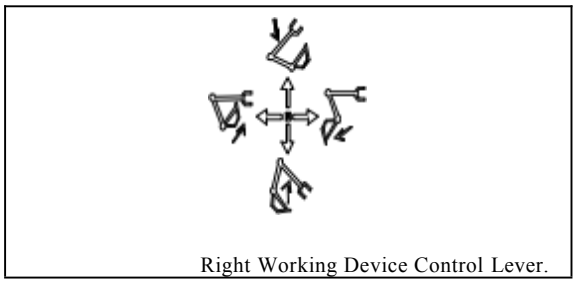
Right Working Device Control Lever.

5. Boom Swing (Swing Head) Control.

By manipulating the left control pilot valve, the swing head will turn left when biased to the left and turn right when biased to the right.

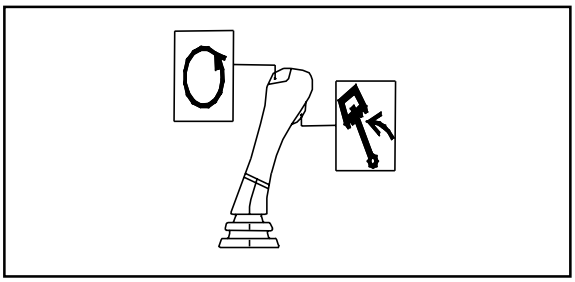

For machines equipped with boom swing functionality, ensure that the machine is in boom swing mode before initiating the swing.

6. Bulldozer Blade Operation

Pushing the bulldozer control lever down causes the bulldozer blade to cut downwards.

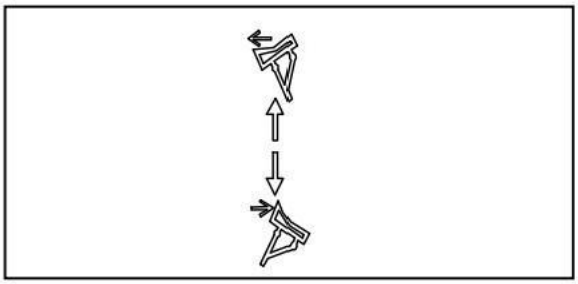

Pulling the lever upwards raises the bulldozer blade.
Note: During bucket rod operation, instances of stalling may occur. This phenomenon is not a mechanical fault but a normal occurrence for the excavator, as the weight of the bucket rod can accelerate its movement, potentially leading to insufficient oil supply.

Working on slopes or in water.

Warning: Construction near the foot of a slope is extremely hazardous. Various conditions such as rain, muddy ground, snow-covered ground, icy ground, loose sand, and soft ground present potential risks to operational safety. Therefore, when working in hazardous areas such as the foot of a slope or on inclines, you must accurately assess whether it is safe to operate in order to make an informed decision.

- When traveling, raise the bucket approximately 20 to 30 cm above the ground.
- Do not walk backward down a slope.
- When traversing over a mound or other obstacles, keep the working device close to the ground and proceed slowly.
- Do not turn or traverse across a slope; it is advisable to turn in a flat area beforehand.
- When working on a slope, turning or operating the working device can cause the machine to lose balance and tip-over; therefore, such operations should be avoided. It is extremely dangerous to rotate the bucket downhill when it is loaded.
- If this operation is necessary, a platform must be constructed with soil on the slope to ensure that the machine can maintain balance during operation.
- Do not ascend or descend steep slopes, as this presents a hazard of machine rollover.
- When traveling uphill, if the track plates slip or if the machine cannot ascend solely by the power of the tracks, do not use the bucket's pull to assist the machine in climbing, as this presents a hazard of machine rollover.
- When traveling uphill, ensure that the engine and hydraulic oil have been properly preheated; otherwise, it may result in an accident.

Permissible water depth
Do not operate the machine in water deeper than the centerline of the track wheels.

For parts that have been submerged for an extended period,
apply grease until all used grease is completely expelled.

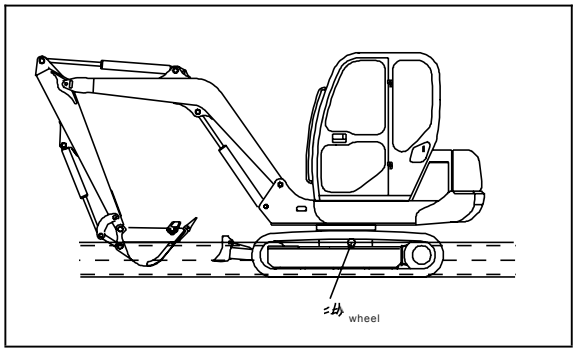

Avoid muddy environments

Always exercise caution during operation to prevent becoming stuck in mud. If the machine becomes stuck, follow the steps below to extricate it.

A. Stuck on one side of the track

Note: When lifting the machine with the boom or dipper arm, ensure that the bottom of the bucket is in contact with the ground (do not use the bucket teeth to push), and maintain an angle between the boom and dipper arm of 90 to 110 degrees.

When only one side of the track is stuck in mud, use the bucket to lift the track, then place wooden boards or logs underneath, and drive the machine out. If necessary, also place wooden boards under the bucket.

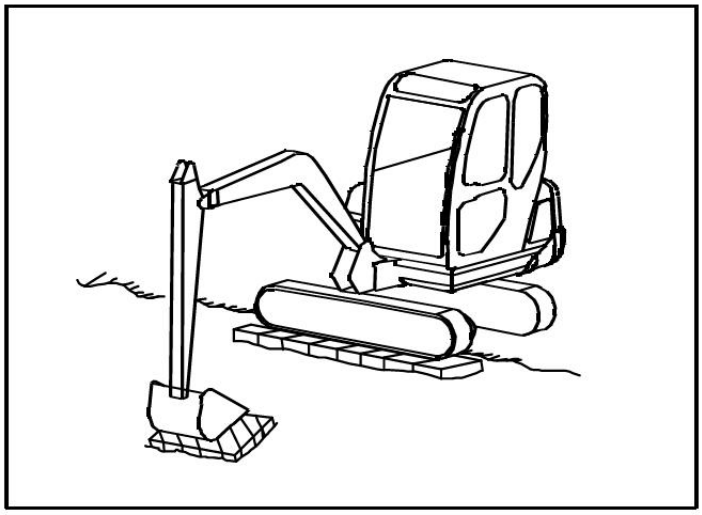

B. Both sides of the tracks are stuck.

If both sides of the tracks are stuck in mud and slippage prevents movement.

Utilize the method provided above to place wooden boards or logs.
Dig the bucket into the ground in front, operate the boom in the same manner as during excavation, and adjust the travel control lever to the forward position to pull the machine out.

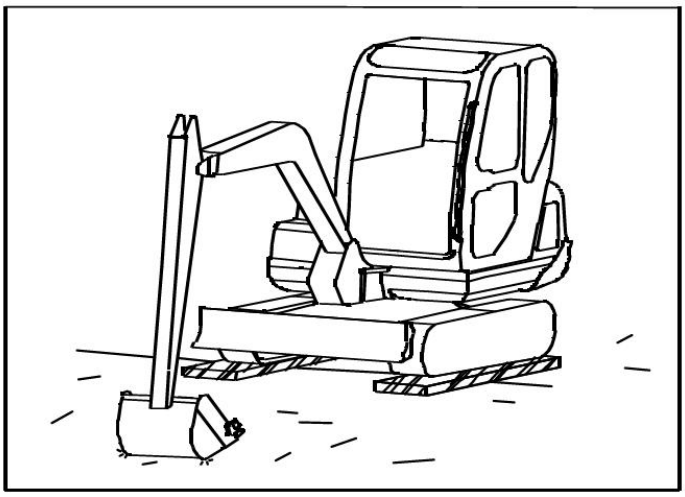

Guidelines for Construction Operations.

1. Backhoe Operations.

The backhoe is suitable for excavation at positions below the machine.

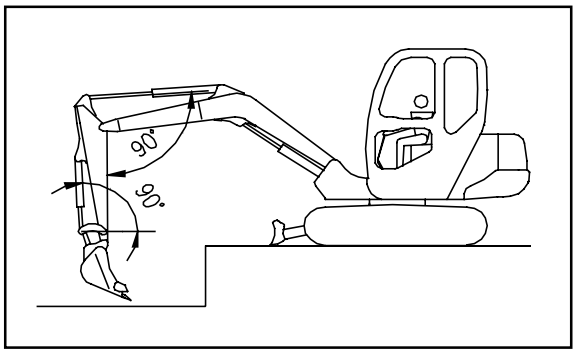

When the machine is in the position shown in the diagram on the right, specifically when the bucket oil cylinder and the linkage, as well as the dipper oil cylinder and the dipper, form a 90° angle, the maximum digging force of the bucket can be achieved.

Effectively utilizing this angle during excavation can optimize work efficiency.

The digging range of the dipper extends from a 45° angle away from the machine to a 30° angle towards the machine.

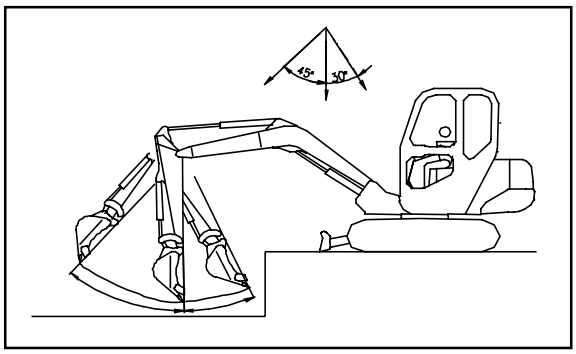

Depending on the excavation depth, there may be some variations; however, it is advisable to operate within the a forementioned range and avoid extending the oil cylinder to its stroke limit.

Note: It is advisable to excavate hard, rocky ground only after it has been broken using other methods. This approach will not only minimize damage to the machine but also be more cost-effective.

2. Loading Operations

In areas with a smaller rotation angle, positioning the dump truck in a location that is easily visible to the operator can enhance operational efficiency.

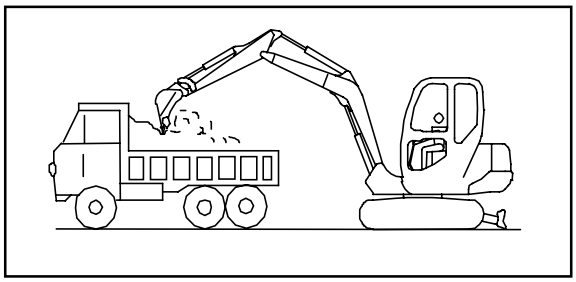

If loading from the rear of the dump truck is more convenient than loading from the side, the loading capacity will be greater.

3. Trenching Operation

Position the bulldozer blade at the rear and anchor it into the ground.

Extend the boom and dipper arm, and insert the bucket teeth into the soil surface.

Excavate using the dipper arm oil cylinder. During the excavation process, adjust the bucket's cutting and loading angles as necessary, or switch to using the bucket oil cylinder for excavation. Avoid inserting the bucket teeth too deeply into the soil to prevent overloading the hydraulic system, which may hinder excavation. If you encounter a situation where excavation is not possible, raise the boom appropriately, and the situation will improve. Once the bucket is full, lift the boom and dipper arm to raise the bucket above the ground, then rotate the platform to the appropriate position to unload the soil.

Attention:

1) Do not touch overhead electric wires.
2) Ensure that the conditions of underground pipelines and cables are clarified before commencing excavation to prevent damage to pipelines and the risk of electric shock.
3) In the event of an electric shock incident, the operator should remain seated and warn others to keep their distance. Move the machine to a safe area, disconnect the power, and then exit.

4. Backfilling or leveling.

To fill the trench, the direction of the excavator's travel should be perpendicular to the trench. After inserting the blade into the soil to a specified depth, release the blade control lever, activate the machine's travel, and use the blade to push soil into the trench.

5. Shake off the mud and soil from the bucket.

Position the arm in a nearly horizontal state and the bucket in the unloading position. If the mud and soil do not fall out, manipulate the bucket control handle left and right a few times, and the sand will shake out of the bucket. Avoid using the impact vibration method of the bucket oil cylinder's stroke end to dislodge the sand and soil.

6. Precautions for the use of related components:

A. Precautions for track usage.

1) Excessive debris entering the track will increase the operational strength of the track, potentially leading to damage.
2) Avoid making sudden turns on road surfaces with high friction.
3) Make every effort to avoid contact with saltwater or saline gases, as salt can corrode the tracks.
4) If the tracks will not be used for an extended period, store them in a cool, dry location.
5) When one track and the front attachment are raised, do not travel using the other track, as this will lead to excessive wear.
6) During travel, the tracks must not be loose; otherwise, they may detach or sustain damage.

B. Precautions for Using the Bulldozer Blade:

1)The bulldozer blade is in- tended solely for moving soil; do not use it for digging, as this may damage the bulldozer blade or the track system.
(Refer to the diagram on the right.)

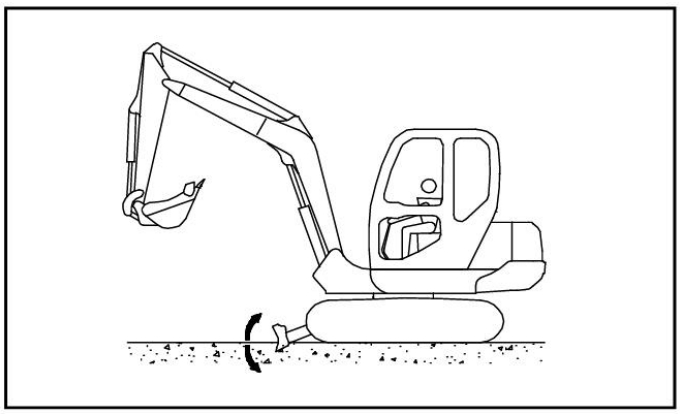

2)The bulldozer blade cannot support heavy or unbalanced loads; otherwise, it may damage the bulldozer blade or the track system.

3)When traveling, the bulldozer blade must not engage with any objects ; otherwise, it may damage the bulldozer blade or the track system.
4)When using the bulldozer blade to lift the machine, ensure that the road surface is level and that the bulldozer blade maintains stable contact with the ground.

Disassembly and Installation of the Bucket.

Safety Principles.

- When striking the pin with a hammer, metal shavings may fall into the eyes, potentially causing serious injury. Always wear protective goggles, a safety helmet, gloves, and other protective equipment when performing this operation.
- When removing the bucket, ensure that it is placed down securely.
- If the pin is struck forcefully, it may fly out and injure personnel in the surrounding area. Therefore, ensure that the surrounding area is safe before striking the pin.
- When disassembling the pin shaft, it is crucial to avoid standing beneath the bucket and to refrain from placing any part of your feet or body under the bucket.
- When disassembling or installing the pin shaft, take care to avoid injuring your hands.
- When aligning the holes, do not insert your fingers into the pin shaft.

Installation.

Position the machine on solid, level ground. During connection work, for safety reasons, collaborate and proceed with caution.

Position the excavator in working condition, facing the bucket.

Manipulate the dipper arm until the holes of the dipper arm and bucket are aligned and inserted.

① Insert into the hole.

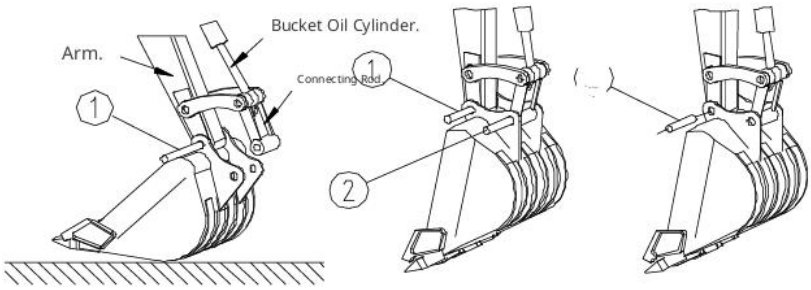

Raise the boom and dipper arm, allowing the bucket to hang vertically from the dipper arm.

Operate the dipper arm oil cylinder to align the hole of the connecting rod with the connecting hole of the bucket.

Install shaft ②, remove steel rod ①, and install shaft ③.

Disassembly.

Position the machine on solid, level ground. The bucket should be placed so that it just makes contact with the ground. Dropping the bucket heavily onto the ground will increase resistance, making it difficult to remove the pin

Remove the double nuts from the locking bolts on each pin of the boom and linkage. Then, detach the bolts and subsequently remove the boom pin ③ and linkage pin ② to take off the bucket.

Park the machine.

Safety Principles.

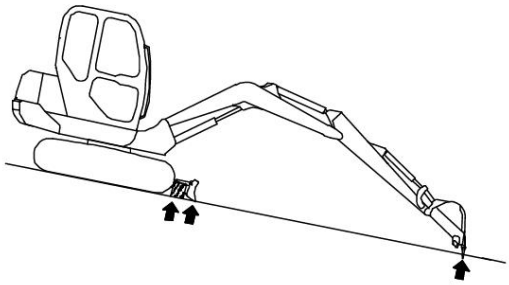

1) Avoid sudden stops. When parking the machine, ensure to leave as much space as possible.
2) Always park the machine on solid, level ground. Avoid parking on a slope. If it is necessary to park on a slope, place blocks under the tracks and insert the working device into the ground to prevent the machine from moving.
3) If the working device control lever is accidentally touched, the working device or machine may move suddenly, potentially
causing serious personal injury or accidents.
Therefore, before standing up from the seat, ensure that the safety locking control lever is securely placed in the locked position.

Park the machine.

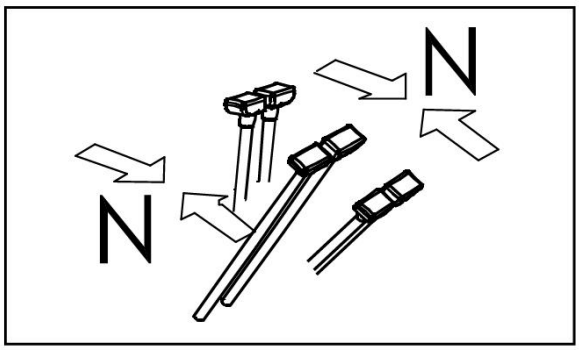

1)Position the left and right traveling control levers in the neutral position and stop the machine.

2) After the engine has been operating under heavy load, do not shut

it down immediately; allow it to run at low speed for 5 minutes to cool

down before turning it off

3) Lower the bucket and bulldozer blade to the ground.

4) Push the throttle handle fully forward (turn the throttle knob to

the left limit position) to reduce the engine speed to idle.

5)Turn the ignition key to the 'OFF' position

(all indicator lights will turn off).

6) Rotate the safety lock handle to the locked position.

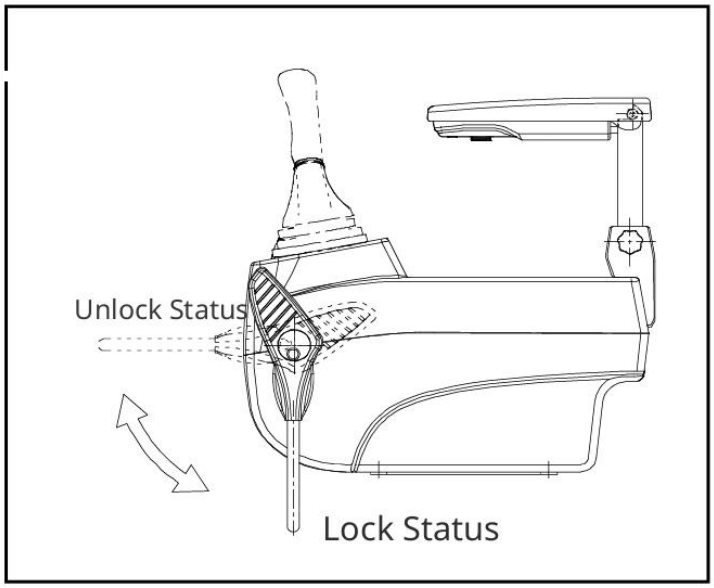

After Operation

1. Inspection

Inspect the engine coolant temperature, engine oil pressure, fuel pressure, fuel level, etc., on the machine's digital monitoring display.

2. Locking

Ensure that the following areas are secured.

1)Cab door (do not forget to close the windows and the flip window). In any case, if you need to open the flip window, you must first pull the locking handles on both sides of the flip window. By operating the handle of the flip window lock, you can slide the flip window up and down. Once the flip window is in the desired position, push it upward to the locked position, release the locking handle, and secure the flip window.

Conversely, you can operate to lower the flip window.

2) Fuel tank filling port.
3) Hydraulic oil tank filling port.
4) Battery box cover.
5) Tank cover and engine cover.

When closing the tank cover and engine cover, please ensure the pneumatic spring is reset before pressing down the cover.

Note: When opening the engine cover, do not stand behind it, as it may spring up and cause injury.

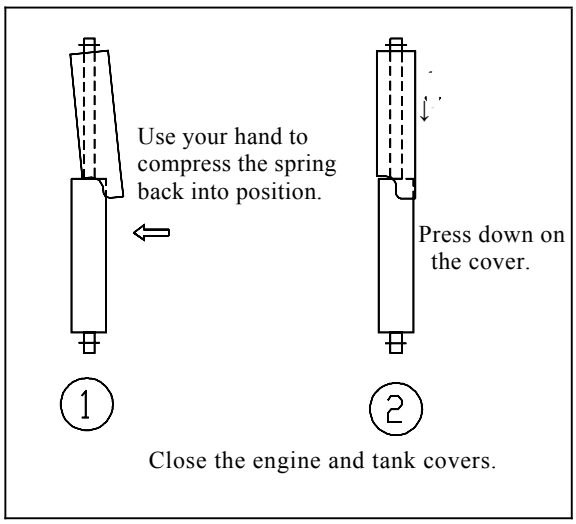

Loading and unloading of the machine and transport.

1. Safety regulations for the transport of the machine.

1) Operate the engine at low speed; when loading or unloading, operate the machine slowly.
2) Do not load or unload the machine while the automatic warm-up operation is in progress.
3) If the automatic warm-up operation is canceled during the loading or unloading process, the speed will change suddenly
4) When loading or unloading the machine, select a solid and level surface. Maintain a safe distance from the edge of the road.
5) To utilize a ramp with adequate width, length, thickness, and strength, the width of the ramp should be 1.2 to 1.5 times the width of the track. To prevent any accidents, it is advisable that the loading/unloading slope be less than 15°, or that the length of the slope exceeds 3.5 times its height. When using a soil ramp, ensure that the soil is fully compacted and take measures to prevent slope collapse.
6) To prevent the machine from slipping on the ramp, all dirt and debris must be removed from the tracks prior to operation. Ensure that the surface of the ramp is clean and free of water, snow, ice, grease, or oil.
7) Do not correct the steering while on a slope, as this poses a risk of the machine overturning. If steering is necessary, drive off the slope, correct the direction, and then re-enter the slope.
8) Do not use the working device for loading and unloading operations, as this is hazardous.
9) When on a slope, refrain from operating any control lever other than the traveling control lever.
10) At the junction between the slope and the transport vehicle, the machine's center of gravity may suddenly change, creating a risk of losing balance. Therefore, proceed slowly when crossing this area.
11) When rotating the upper structure on the transport vehicle, the vehicle becomes unstable. Therefore, the working device must be retracted, and the rotation should be performed slowly.
12) Whether getting on or off the vehicle, the wheels of the transport vehicle must be chocked.
13) During transport, use wooden wedges to secure the excavator in a fixed position on the transport vehicle. Additionally, fasten the excavator to the transport vehicle with straps.
14) After completing work or finishing operation, before the operator leaves the seat, the left control box must first be raised to cut off the pilot control oil supply, preventing inadvertent movements of the machine due to accidental contact with the control lever.

2.Loading

1)Loading should only be conducted on solid and level ground, while maintaining a safe distance from the edge of the road.

2)Ensure that the transport vehicle is properly braked. Additionally, place chocks under the tires to prevent the transport vehicle from moving.

3)Install a ramp between the transport vehicle and the machine, ensuring that both sides of the ramp are level. The maximum slope of the ramp must not exceed 15 degrees. Adjust the distance between the ramps to align with the center of the tracks.

4) Align the excavator with the ramp, ensuring that the bulldozer blade is positioned at the rear.

For safety, the excavator should be brought close to the ramp and slowly ascend the slope until it reaches the end of the ramp.

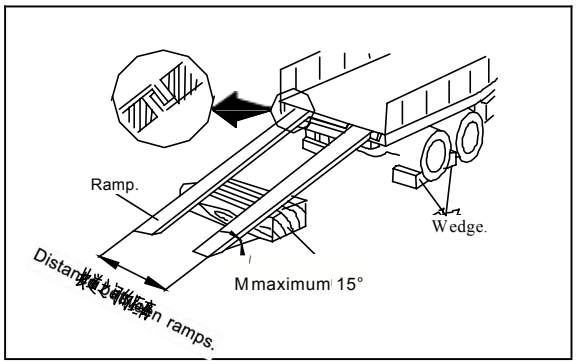

Note: When on the ramp, only the traveling joystick may be operated; do not operate any other joysticks or pedals.

4) Stop traveling and extend the boom outward (as shown in position B in the diagram), allowing the front part of the excavator's track to tilt onto the transport vehicle's bed. Take care not to let the working device come into contact with the body of the transport vehicle while tilting the machine.

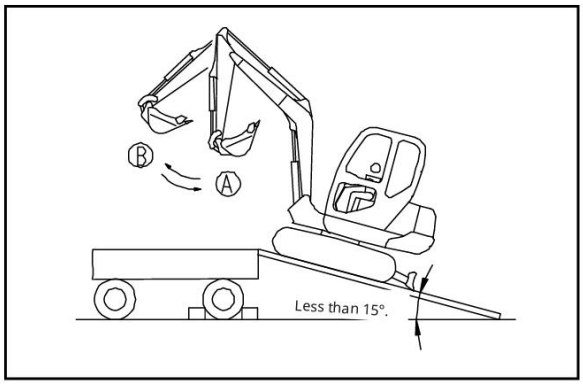

Continue to drive the machine to the designated position of the transport vehicle.

5) Lower the boom and place the bucket on the ground, lower the buldozer blade, and stop the machine at the designated position on the transport vehicle.

Warning: After completing work or finishing operation, the operator must first pull up the safety locking handle to raise the left control box before leaving the seat. This ensures that the pilot control oil circuit is cut off, preventing accidental or unintended contact with the control lever that may cause the machine to operate incorrectly.

Note: Please select a transport vehicle that corresponds to the weight and dimensions provided in this user manual.

3. Secure the machine on the transport vehicle.

1) Properly position the working device.

2) Turn off the engine and remove the key from the ignition switch.

3) Rotate the safety lock handle to the locked position.

4) Lock the cab and engine cover.

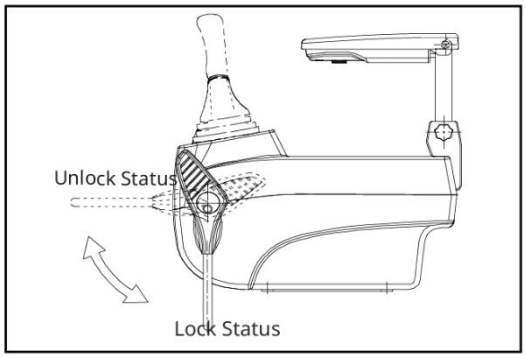

5) Place blocks under both ends of the tracks to prevent the machine from moving during transport, and secure the machine with steel cables. Special attention should be given to ensure that the machine is firmly secured to prevent it from sliding to one side.

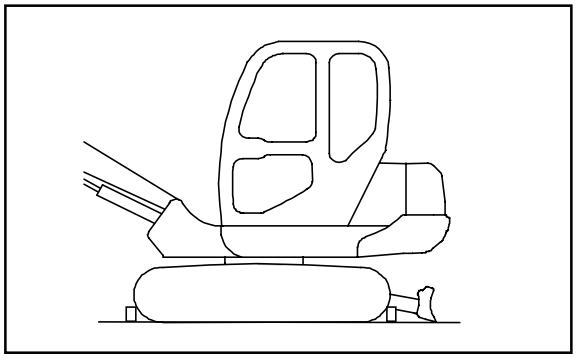

4: Unload from the transport vehicle.

1) Loading and unloading must be performed on solid, level ground, while maintaining a safe distance from the edge of the road.

2) Engage the brakes on the transport vehicle and place chocks under the tires to ensure the vehicle remains stationary.

3) Install a ramp between the transport vehicle and the machine. Ensure that both sides of the ramp are on the same level. The

slope of the ramp should not exceed 15 degrees. Adjust the distance between the ramps to align with the center of the tracks.

4) Remove the steel wire rope that secures the machine.

5) Start the engine. In winter, ensure that a thorough warm-up operation is conducted.

6) Lower the safety locking handle.

7) Raise the boom and bucket and lift the bulldozer blade.

8) Verify that there are no obstacles within the operational range of the excavator.

9) Remove the platform locking pin, rotate the platform 180 degrees, positioning the digging apparatus towards the slope, with the excavator facing forward.

10) The excavator should move forward slowly until it reaches the top of the platform, extending the boom outward to allow the excavator's track to tilt onto the ramp, and then continue moving forward slowly until it reaches the ground.

5. Lifting the Machine

A. Safety Precautions

1) Do not lift the machine when there are individuals on it.

2) Ensure that the steel wire rope used for lifting the machine possesses sufficient strength to support the machine's weight.

3) Do not lift the machine in any position other than those specified in the following procedures, as this may create a risk of losing balance.

4) Do not lift the machine when the upper structure is turned to the side. Before lifting, position the working device at one end of the chain wheel and ensure that the lower track is parallel to the upper structure.

5) When lifting, maintain the machine in a level position.

6) It is extremely hazardous to walk beneath the machine while it is being lifted. Do not walk under the machine.

B. Lifting Procedure - Standard Technical Specifications for the Machine.

Note: The lifting procedure is applicable to machines that conform to standard technical specifications. Depending on the actual attachments and optional components installed, the lifting methods may vary due to differences in dimensions, weight, and center of gravity distribution.

When hoisting the machine, please operate on level ground following the steps outlined below.

1. Rotate the upper structure to position the working device at one
2. end of the chain.
3. Fully extend the bucket oil cylinder and the dipper oil cylinder, then use the boom oil cylinder to lower the working device to the ground, as illustrated in the diagram on the right.

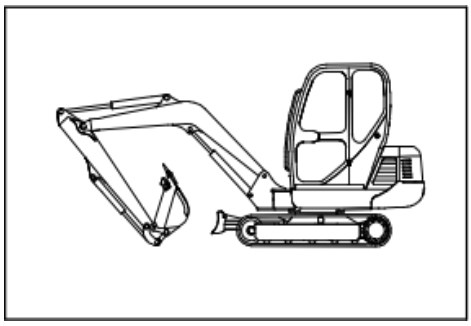

4. Turn off the engine, ensure that there are no objects around the cab, and then exit the machine. Securely close the cab door and all windows.
5. From the front, thread the steel wire rope between the first and second support rollers, and from the back, thread it between the last support roller and the second to last support roller. Alternatively, it can be threaded from underneath the track.
6. Adjust the lifting angle of the steel wire rope to between 30° and 40°, and then gradually lift the machine.
7. Once the machine is off the ground, carefully check to ensure that it is balanced, and then proceed to lift it slowly.

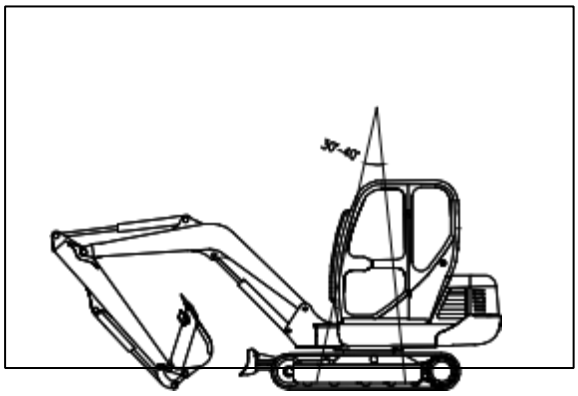

Operation in cold or hot climates

1. Operation in cold climates

Cold weather can lead to specific problems; therefore, special attention must be given to protective measures to prevent significant damage to the machine. Proper maintenance during cold weather will extend the machine's lifespan.

1) Electrical system: Ensure the battery is clean and fully charged. Inspect the battery cables and connections, clean the connections, and apply a layer of grease to prevent rust.

2) Lubricants: Apply lubricating oil of suitable viscosity at each joint. Please use the oils recommended by this machine.

3) Fuel System: Ensure that the fuel supply is suitable for the current cold climate. Switch to low-viscosity fuel if necessary. Inspect the fuel system for moisture. Cold weather can cause moisture to accumulate in the fuel tank. Check the moisture level in the fuel filter every 50 hours of operation. If no moisture is detected, the inspection interval may be extended. If moisture is present, inspect the fuel tank.

4) Cooling System: Before operating the machine in cold weather, check the coolant and adjust the mixing ratio as appropriate. Use antifreeze that is suitable for the environmental temperature conditions.

5) Working Device: Before operating the machine, engage the low gear and slowly start the machine. Then, stop the machine and operate the working device for approximately 10 minutes, or until it is confirmed that all hydraulic cylinders are functioning normally, before proceeding with the operation.

2.Operating in Hot Weather.

To prevent damage to the machine, please follow the terms outlined below:

1) Ensure that the coolant level in the radiator is adequate.

2)Before the onset of hot weather, inspect the radiator and replace the coolant if necessary.

3) Clean all dirt and deposits from the surfaces of the radiator and engine.

4)Inspect the fan drive belt.

5) Use lubricating oil with the correct viscosity.

6) Use a properly mixed coolant in the cooling system.

7) When operating in extremely poor conditions with high dust levels, it is essential to frequently check the air filter.

Storage of the Machine

1. Preparations Before Storage

When storing the machine for an extended period, please follow the steps outlined below.

1) Clean and rinse all components, then place the machine indoors. If it is unavoidable to store the machine outdoors, select a flat surface and cover the machine with a tarpaulin.

2) Apply a thin layer of grease to the metal surface of the piston rod and lubricate all lubrication points.

3) Remove the battery, charge it, and store it in a dry, non-freezing location.

4) Drain the engine oil from the engine and refill it with anti-corrosive engine oil. The anti-corrosive oil suitable for piston-type engines should conform to the MIL L 21260 specification. For winter storage, use SAE 10W of grade 1 or 2; for summer storage, use SAE 30 grade.

5) Add 4 to 6% of the same type of anti-corrosive engine oil to the fuel and ensure that both are thoroughly mixed. To prevent the formation of condensate, the fuel tank should be refilled with this mixed fuel.

6) Check the antifreeze performance of the coolant, ensuring that its freezing point is at least -20°C by adding antifreeze. If the coolant lacks a corrosion inhibitor due to climatic conditions, a corrosion inhibitor should be added (for instance, according to MIL-G4339C, it should contain 5% corrosion inhibitor).

7) Start the engine and allow it to run for more than 15 minutes at varying speeds without load. The lubrication oil for the hydraulic components and the reducer should also be operated before replacing it with new engine oil for storage.

8) Seal the intake of the air filter and the outlet of the exhaust pipe. It is recommended to use thick plastic paper and adhesive tape for this purpose.

9) Lock the platform by lifting the safety lock handle (lift the left control box) to ensure that all control levers and pedals are in a locked position.

10) Set the shut-off valve for attaching accessories on the machine to the locked position. Install a screw plug on the below.

11) Maintain the cleanliness of the machine and store it in a dry location.

Note: When storing the machine, adjust it to the position shown in the diagram on the right to protect the oil cylinder piston rod and prevent rust.

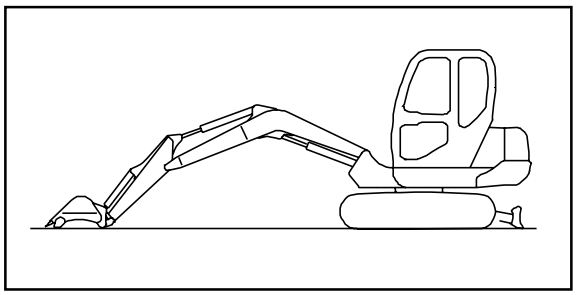

2. During Storage

1) During the storage period, the machine should be operated once a month to ensure a new layer of oil film adheres to the surfaces of moving components. Additionally, the battery must be charged.

2) For machines equipped with air conditioning, the air conditioning system should be activated.

3) Rotate the tracks.

⚠	Warning: When the machine is indoors, if rust prevention operations are necessary, ensure that doors and windows are opened to promote air circulation and prevent gas poisoning.

3. Recovery for Use After Storage

Before using a machine that has been stored for an extended period, please follow the steps outlined below.

1) Wipe off any grease applied to the surface of the oil cylinder piston rod.

2) Add engine oil and grease to all components.

3) If the machine has been stored for a long time, moisture from the atmosphere may have entered the oil. Before starting the engine or after starting it, check the oil in all components. If water is present in the oil, replace all of the oil.

Note:

1)Under normal climatic conditions, the storage method described above allows the excavator to be stored for up to one year. However, after six months of storage, each component should be rotated for 15 minutes without any load. Additionally, lubrication oil must be applied to each component.

2) Before reintroducing an excavator that has been stored for an extended period into operation, necessary maintenance and inspections must be conducted. After one year of storage, the oil in the reducer and hydraulic circuit must also be drained and replaced.

Technical Fault Causes and Solutions

Fault	Cause	Solution
1. The engine fails to start Difficult to start or hard to start	● There is an issue with the starter motor	● Replace or repair the starter motor
	■ Battery charge is insufficient	■ Charge or replace the battery
	■ Improper use of the preheating circuit or preheating plug	■ Repair or replace the preheating plug
	● Incorrect fuel injection timing	● Check the fuel injection timing
	● Blockage in the fuel pipeline	● Clean the fuel line
	● Blockage in the fuel filter	● Clean or replace the fuel filter
	● The fuel system contains water, dirt, or air	● Bleed air and clean the fuel line
	■ Dirty fuel injector or low fuel injection pressure	● Repair at the local service center
	● Fault in the fuel injection pump	■ Consult the company dealer
	● Insufficient fuel	● Refuel
	● Blocked intake and exhaust system	● Ensure unobstructed intake and exhaust system
2. Engine knocking during operation Irregular rotation or engine shutdown	● Excessive gas blow-by	● Consult the company dealer
	● Blockage in the fuel filter	● Clean the filter.
	■ Contaminants or air present in the fuel system	● Exhaust and clean the oil circuit.
	● Oil filter is blocked; the nozzle is dirty or faulty.	● Repair at the local service center
	● The high-pressure oil pipe is damaged.	● Replace the high-pressure oil pipe.
	● Insufficient fuel	●Refuel

	■The governor connection cannot be adjusted.	● Consult the company dealer
	● The fuel injection pump has a fault.	■ Consult the company dealer
	■ The fuel injection timing is incorrect, or the nozzle is stuck.	● Check the fuel injection timing and inspect the nozzle.
3. Reduction in engine power	●Fuel is mixed with air.	● Bleed the air
	●The oil circuit supply is not smooth.	● Check and clean
	● Changes in fuel injection timing.	● Adjust to the specified values
	● Injector malfunction	■ Check the working pressure and the fuel atomization condition
	● Air filter blockage	● Clean the filter element.
	■ Incorrect valve clearance or valve not sealing properly	●Adjust the valve clearance
	● Cylinder gasket failure or air leakage	■ Replace the cylinder gasket
	●Injector pump malfunction	■ Consult the company dealer
	■ Engine overheating	● Check if the coolant used is correct. Inspect the water pump and belt for excessive looseness; if present, they should be repaired or replaced, and any blockages in the water passage should be cleared.

Fault	Cause	Solution
4. Engine Overheating	● Coolant Level is Too Low	●Add Coolant
	●Temperature Sensor Malfunction	● Replace the Sensor
	●Air filter blockage	● Clean the Air Filter
	■Fan Belt is Loose or Malfunctioning	● Re-tighten or Replace
	■Cooling System Passage Contains Debris	● Clean the Passage
	■Poor Quality Engine Oil or Excessive Engine Oil	● Change the Engine Oil
5.Engine Oil Pressure is Too Low	● Engine Oil Level is Too Low	● Refuel
	● Engine Oil Filter is Blocked	● Clean the Engine Oil Filter
	● Pipeline has an Oil Leak	● Tighten for Replacement
	● Engine Coolant Temperature is Too High	■ Properly prepare the coolant mixture ratio or consult a local company representative.
6. Engine Emitting Grayish -Black Smoke Colored Smoke	● Fuel of Poor Quality	● Use the correct fuel.
	● Air Filter is Blocked	● Replace the filter element.
	● Injection Timing is Incorrect	● Adjust to the specified values
	● Injector is Poorly Atomized	● Check and replace parts.
7.Engine Emitting White Smoke	● Fuel of Poor Quality	● Ensure the correct fuel is used.
	● Excess Engine Oil	● Restore the oil level to the recommended mark.
	● Injection Timing is Incorrect	● Adjust to the specified values
	● Water Present in the Cylinder and Fuel	● Check and replace the fuel.
8. The battery cannot be charged.	● Connections are Loose or Rusty	●Clean or tighten as necessary.
	●The generator belt is loose or faulty.	●Tighten or replace as needed.

	● The generator is not charging.	● Consult the company dealer
9. The starter is not functioning.Or it is turning slowly.	■ Connections are Loose or Rusty	■ Clean or tighten as necessary.
	■ Battery charge is insufficient	■ Replace as necessary.
	● The wiring is damaged.	● Consult the company dealer
10. The engine runs, but...The generator alarm light is illuminated	● There is a fault with the generator.	● Consult the company dealer
	● There is a fault with the electronic regulator.	■ Replace as necessary.
	● The circuit has a fault	● Maintenance required
11. The hydraulic system com-ponent is operating too slowly	● The hydraulic oil is cold	■ The operating action is heating up
	● The pilot system pressure is too low	● Consult the company dealer
	● Incorrect usage of hydraulic oil	● Use the appropriate hydraulic oil
	● The engine speed is too slow	● Please consult the company dealer

Fault	Cause	Solution
12. The hydraulic oil temperature is high	● Incorrect usage of hydraulic oil	● Use the appropriate hydraulic oil
	● Oil circuit is blocked	● Consult the company dealer
	●The hydraulic oil filter is blocked	■Clean or replace as necessary
	●Wear of the oil pump	● Consult the company dealer
	● Blockage in the oil cooler	■ Clean the oil cooler thoroughly
	● Fault in the oil cooler	■ Consult the company dealer
	■ Main safety valve or swing system overflow valve pressure is too high	■ Consult the company dealer
	● The oil is excessively dirty	● Replace the oil
	● Fault in the sensor	■ Replace as necessary.
13. Emulsification of hydraulic oil or Foam is present	■Air leakage in the pipeline between the oil tank and the oil pump	●Perform repairs and tighten
	● Incorrect hydraulic oil has been used	● Use the appropriate hydraulic oil
	● Presence of water in the hydraulic oil	● Replace the oil
	● Oil level is too low	● Adjust the oil level
14. The oil pressure is too low or absent Pressure is present	● Hydraulic pump is damaged	● Consult the company dealer
	● There is insufficient oil in the system	● Refuel
	■Fault in the safety valve	● Consult the company dealer
15. All components must not be Operation	● The hydraulic pump is damaged	● Please consult the company dealer
	● There is a lack of hydraulic oil	● Refuel
A. The oil pump is making noise	● The oil suction pipe is leaking air	● Repair or replace

B. The oil pump noise remains unchanged	■The auxiliary pump is damaged	● Replace as necessary.
	■The hydraulic safety control device is not functioning	● Inspect and repair
16. Each oil cylinder or motor The work is insufficient or not operational	■Hydraulic pump is damaged	● Please consult the company dealer
	■The main safety valve pressure has decreased	■Please readjust the pressure
	●The oil pressure and oil level are low	● Refuel
	●The oil suction filter is clogged	● Please clean the oil filter
	●The oil seal is damaged	● Repair or replace as necessary
	■The piston rod is damaged, resulting in oil leakage	● Repair or replace as necessary
	●The pilot valve is malfunctioning	●Replace as necessary.
	●The pilot line is broken or leaking oil	● Repair or replace
17. Both traveling devices are not operational	● The central swivel joint is leaking oil	● Consult the company dealer
18. One traveling device is not operational	●The traveling device is damaged	● Consult the company dealer
	●The control mechanism is damaged	● Maintenance required

Fault	Cause	Solution
19.Traveling is not functioning properly	● The track is either too tight or too loose	■ Readjust as necessary
	● The performance of the oil pump has decreased	● Consult the company dealer
	● The track frame is deformed	● Repair or replace
	■ Debris or rocks are present in the track chain	● Remove for repairs
	● The control valve is leaking oil	■ Consult the company dealer
	■ The motor's performance has decreased	● Consult the company dealer
20. Rotation is not functioning properly	■ The oil pump's performance has decreased	■ Consult the company dealer
	● The rotary motor is damaged	■ Consult the company dealer
	● The pilot valve is not operational	● Consult the company dealer
21. Rotation is not continuous	■ The rotary gear is worn	● Consult the company dealer
	■ The rotary support or ball bearing is damaged	■ Consult the company dealer
	● There is a lack of grease	● Consult the company dealer
	● The control valve is leaking oil	● Consult the company dealer
22. Noise from the air conditioning system	■ Loose electrical connection causing abnormal noise from the clutch	■ Tighten the connection or perform necessary repairs
	● Belt is loose	● Tighten moderately; replace if damaged
	● Blower fan blades are loose	● Retighten as needed
	● Blower is not functioning properly	● Repair or replace
	■ Electronic fan is not functioning properly	● Repair or replace

	●Compressor bearing is damaged	■Replace as necessary.
	● Tensioner bearing is damaged	■Replace as necessary.
23. Air conditioning is not providing cooling	● Fault in the electrical circuit	● Repair or replace
	● Fault in the air conditioning switch	● Repair or replace
	●No refrigerant present	● Perform leak detection, repair, and recharge refrigerant
	● System blockage detected	■Clean or replace as necessary
	● Belt is either slack or broken	●Adjust or replace as necessary
	● Expansion valve malfunction	■Clean or replace as necessary
	● Compressor is operating abnormally	● Repair or replace
	●Pressure switch malfunction	■ Replace as necessary.
24. Air conditioning occasionally works, occasionally does not	● Poor connection in the circuit	● Maintenance required
	● Belt is slack	● Adjust the belt moderately
	■ Improper adjustment of air conditioning switch temperature	■Readjust as necessary
	■Excessive moisture in the system causing internal ice blockage	● Replace the drier unit
	● Electronic fan or its relay is damaged	● Repair or replace

5

Maintenance and Care

Knowledge of Maintenance and Care

New Machine Break-in Period

The initial 100 hours of the machine is designated as the break-in period. During this time, it must be operated with caution and should not be subjected to tasks with excessive loads or high work intensity. For the first 50 hours of the break-in period, it is permitted to bear only 80% of the work load. The quality of operation during the break-in period significantly impacts the machine's lifespan.

After the first 50 hours of operation, the machine should undergo its first inspection in accordance with the inspection and maintenance schedule, replacing the relevant oils and filters. Additionally, check the contamination level of the hydraulic oil, which must not exceed NAS 9 level. If it does, replace it with new hydraulic oil.

When the hydraulic system is not operational, do not allow the engine to run at high speed. The working device may only be operated when the hydraulic oil temperature exceeds 20 degrees Celsius.

When operating in a dusty environment, please follow the steps outlined below:

- Regularly use the air filter blockage sensor to check if the air filter is clogged, and it is necessary to clean the filter element frequently.
- Regularly clean the radiator core to prevent clogging.
- Consistently clean and replace the fuel filter element.
- Ensure that electrical components, particularly the starter motor and alternator, are cleaned to avoid dust accumulation.
- When inspecting or changing the oil, relocate the machine to a dust-free area to prevent dust from contaminating the oil.
- Remove any debris attached to the oil cylinder piston rods to maintain their cleanliness.

Oil and Filter.

Please use clean engine oil and grease and ensure that no impurities enter the engine oil container.

After changing the oil or replacing the filter, inspect the old oil and filter for metal shavings or impurities. If a significant amount of metal shavings or impurities is detected, report to the machine supervisor and take appropriate action.

Do not mix oils of different grades. If it is necessary to add a different grade, completely drain the old oil and replace it with the new grade of oil.

Timer Reading

Check the timer on the dashboard daily to determine if the working hours have reached the required maintenance interval.

Use Genuine Parts

Utilizing Yuchai genuine parts is crucial for ensuring the machine operates correctly and for prolonging its service life.

Waste Disposal

Encourage environmental protection and pay special attention to waste disposal methods:

- Collect the oil discharged from the machine in a container; do not discharge oil directly onto the ground or pour it into drains, ditches, rivers, oceans, or lakes.
- When handling hazardous materials such as engine oil, fuel, coolant, antifreeze, plastic components, solvents, filter elements, batteries, and other harmful substances, it is essential to comply with relevant environmental protection regulations.

Prevent objects from falling into the machine.

- When opening the fuel tank filler for inspection, take care not to drop bolts, nuts, washers, or tools into the machine. The entry of these items can cause damage and faults, potentially leading to accidents. If any item falls into the machine, it must be removed immediately.
- Inspect both the front and rear, and account for all tools and parts carried to ensure that nothing has fallen into the machine.

Regular Inspection and Maintenance

Performing regular inspections and maintenance as outlined in the 'Regular Inspection and Maintenance Schedule' is crucial for ensuring the machine operates correctly and for extending its service life. It is imperative to follow the established inspection and maintenance intervals.

Post-Maintenance Re-inspection

Failure to conduct a re-inspection after each inspection and maintenance can result in unexpected faults, leading to serious injuries or damage. Please pay attention to the following items during the inspection:

- Have any areas that should be checked and maintained been overlooked?
- Have all inspection and maintenance tasks been performed correctly?
- Check for any tools or parts that may have fallen into the machine. It is extremely dangerous if parts fall into the machine and become lodged in the linkage mechanism.
- Inspect the machine's exterior for any signs of water or oil leaks, and ensure that all bolts are properly tightened.

Maintenance Overview

Lubricating Oil

- Use oil that meets the grade and temperature specified in the 'Oil Selection Table' of this user manual. The oil must be replaced within the specified time frame, even if it does not appear dirty.
- Caution: Prevent impurities (such as water, metal particles, dust, etc.) from entering the lubricating oil. Most machine issues are caused by the ingress of impurities.
- Do not mix lubricating oils of different grades or brands.
- Refuel according to the specified oil quantity. Both excessive and insufficient oil can lead to faults.
- When changing the oil, ensure that the relevant filter elements are replaced. Specifically, when replacing the oil filter , add fresh, clean oil that meets specifications into the new filter before installation.

Fuel

- When storing or adding fuel, it is crucial to take special care to prevent impurities from entering.
- It is imperative to use the fuel specified in the 'Fuel Selection Table' of this user manual. When selecting fuel, it should be chosen based on the ambient temperature; otherwise, at low temperatures, the fuel may easily solidify (especially below -15 °C (5 ° F)). Therefore, it is necessary to replace the fuel with one that is suitable for the ambient temperature.
- To prevent moisture in the air from condensing in the fuel tank and forming water, the tank should be filled to capacity at the end each workday.
- Before starting the engine or after refueling for 10 minutes, it is essential to drain any sediment and water from the fuel tank.
- If the engine has run out of fuel or if the filter has been replaced, it is necessary to purge air from the fuel line.

Grease

- Grease is utilized to prevent twisting and noise at connection points.
- Any component that appears stiff or generates noise after extended use should be lubricated with grease.
- Old grease that is extruded during the lubrication process must be wiped away.
- It is essential to remove old grease, as any sand or dust that adheres to the grease can lead to wear on rotating components.

Coolant.

- Antifreeze must be utilized in all climates.
- Check the coolant level as per the specifications and promptly add coolant if it is found to be insufficient. Insufficient coolant can result in engine overheating.
- Select coolant and antifreeze that are appropriate for the mixing ratio based on the ambient temperature.
- Do not add coolant when the engine is overheated and has not yet cooled down.

Filter Element.

- All filter elements must be replaced regularly. However, when operating under harsh conditions, the filter elements should be replaced at shorter intervals based on the type of lubricant and fuel (sulfur content) used.
- Do not reuse cleaned filter elements (filter type). They must be replaced with new ones.
- When replacing the filter element, check for any metal particles adhering to the old filter. If metal particles are found, please contact your Yuchai dealer.
- Before use, do not open the packaging of the spare filter element.

Hydraulic System

- During operation and after work, the hydraulic system is under high temperature. When in operation, it is also under high pressure. Therefore, when inspecting and maintaining the hydraulic system, it is crucial to wait for the temperature to decrease and to release the pressure in the hydraulic oil cylinder pipeline.
- When loosening plugs,screws,or hose connections, do not stand in front of the components. Prior to disassembly, gradually loosen to release any internal pressure.
- When inspecting or maintaining the hydraulic oil circuit, it is crucial to release the air to relieve any internal pressure.
- The inspection and maintenance of the hydraulic system include checking the hydraulic oil level, replacing the filter element, and adding hydraulic oil.
- When disassembling high-pressure hoses, ensure that the O-ring is not damaged. If it is damaged, it must be replaced.
- When disassembling components that are sealed with O-rings or gaskets, clean the installation surface and replace it with new parts.
- When installing hoses, it is prohibited to twist or bend them into small diameters. Such actions can damage the hoses and significantly reduce their lifespan.

Easily Worn Components

Components that are prone to wear, such as seals, filter elements, bucket teeth, and blade plates, should be replaced during regular maintenance checks or when they reach their wear limits to ensure the machine's performance is not compromised.

Mandatory Replacement Components

Certain components that are critical for safety, particularly hydraulic hoses, may undergo material changes as the machine accumulates operating hours. They are susceptible to aging, wear, or deterioration, which can affect their normal functionality and create potential safety risks.

These issues are often difficult to detect. Therefore, these components must be mandatorily replaced after the specified usage period.

If the specified time limit has not yet been reached and these components exhibit abnormalities, they must be repaired or replaced immediately. When replacing hoses, the corresponding seals must also be replaced.

Fuel Selection Table

Select the appropriate oil based on factors such as ambient temperature and operating conditions. Oil that meets the following specifications must be used.

	Lubricating oil or fuel	Operating temperature	Viscosity	Recommended oil substitute
Engine oil	CJ415W-40 CJ45W -30	-15℃～+40℃ -25℃～+30℃		
Hydraulic oil	Low temperature area: HS46+ General area: HMP46+	-35℃ or above -12℃ or above	At 40℃ 46±4.5(mm²/s)	Comply with the enterprise standard Engineering Hydraulic oil technical specifications Requirements for hydraulic oil
Travel reducer lubricating oil	Heavy-duty vehicle Gear oil (GL -5)	Suitable for both winter and summer		SAE80W/90
Rotary reducer lubricating oil	Heavy-duty vehicle Gear oil (GL -5)	Suitable for both winter and summer		
Idler, track and support roller lubricants	SAE85W-140	Various temperatures	At 50℃ 20 ~ 25(mm²/s)	
grease	Lithium MoS2 Grease (No. 3)	-20°C~160°C		
Fuel	Summer use: No. 0 light diesel Winter use: -10 light diesel -No. 20 Light diesel	>0℃ 0℃～-5℃ -5℃～-15℃ -15℃～-28℃		
Coolant (antifreeze) (Ethylene glycol engine)	JT 225-1996 - No.25- 35# light diesel	>-15℃ >-35C >-485C		

●Oil capacity data

category	unit	Value (Note: The oil level is based on the oil dipstick scale)			
Fuel tank	Lift	**73**			
Engine oil	Lift	Kubota V2403-M-DI-3B	**7.6**	Kubota V2607-CR-EW52	**10.2**
Hydraulic oil tank	Lift	**70**			

Tightening Torque

Refer to the values in the table below for the tightening torque of all bolts and nuts installed on the machine. If the bolts or nuts are not tightened to the specified torque, it may cause the fastened or connected parts to loosen or even become damaged, resulting in machine faults or affecting operation.

Tightening Torque for General Parts

Bolt Strength Grade	Yield Strength (N/mm^2)	Nominal Diameter of Bolts							
		6	8	10	12	14	16	18	20
		Tightening Torque (Nm)							
8.8	640	9~12	22~30	45~59	78~104	124~165	193~257	264~354	376~502
10.9	900	13~16	30~36	65~78	110~130	180~210	280~330	380~450	540~650
12.9	1080	16~21	38~51	75~100	131~175	209~278	326~434	448~597	635~847

Bolt Strength Grade	Yield Strength (N/mm^2)	Bolt Nominal Diameter (mm)						
		22	24	27	30	33	36	39
		Tightening Torque (Nm)						
8.8	640	512~683	651~868	952~1269	1293~1723	1759~2345	2259~3012	2923~3898
10.9	900	740~880	940~1120	1400~1650	1700~2000	2473~3298	2800~3350	4111~5481
12.9	1080	864~1152	1098~1461	1606~2142	2181~2908	2968~3958	3812~5082	4933~6577

Tightening Torque for Hydraulic Hose

Metric Thread Rotating Nut			
Metric Thread	Outer Diameter of Steel Pipe	Nm Nominal Torque	min /max
M12x1 .5	6	20	15~25
M14x1 .5	8	38	30-45
M16x1 .5	8 10	45	38~52
M18x1 .5	10 12	5	43~85
M20x1 .5	12	58	50~65
M22x1 .5	14 15	74	60~88
M24x1 .5	16	74	60~88
M26x1 .5	18	1 05	85~25
M30x2	20 22	135	115~155
M36x2	25 28	166	140~1 92
M42x2	30	240	21 0~270
M45x2	35	290	255~325
M52x2	38 42	330	2803380

Tightening Torque for Hydraulic Hose

BSP Thread and Rotating Nut		
BSPP Thread	Metric Torque Nm	min. /max
G1/4	20	15~25
G3/8	34	27~41
G1/2	60	42~76
G5/8	69	44~94
G3/4	115	95~135
G1	140	115~165
G1 . 1/4	210	140~280
G1 . 1/2	290	215~365
G2	400	300~500

ORFS Rotating Nut			
UNF Thread	Marked Specifications	Nm min	max
9/16~18	-4	14	16
11/16~16	-6	24	27
13/16~16	-8	43	47
1 ~14	-10	60	68
1 . 3/16~12	-12	90	95
1 . 3/16~12	-14	90	95
1 .7/16~12	-16	125	135
1 . 11/16~12	- 20	170	190
2~12	- 24	200	225

Regular Inspection and Maintenance Schedule

According to the table below, perform regular inspections and maintenance of the machine based on the operating hours indicated by the engine timer. If the machine operates under harsh conditions or at high intensity, or if it is equipped with attachments such as a hydraulic breaker, the inspection and maintenance intervals for certain components may need to be shortened.

Serial number	page number	Inspection and maintenance content	Maintenance cycle (total working hours)					
			10	**50**	**100**	**250**	**500**	**1000**
1	**5-14**	Routine examination						
		● Check for leakage of engine oil, water or fuel	▲					
		●Appearance of mechanical parts and hoses	▲					
		● Bolt and hydraulic joint fixation	▲					
		●Operating components, working lighting and indicator lights	▲					
		●Diesel engine working conditions	▲					
2	**5-15**	Engine fuel system						
	5-16	● Check oil level and refill	▲					
	5-17	● Remove condensed water and impurities			▲			
	5-18	●Cleaning the fuel tank				▲		
		● Check the injection pressure					▲	
		● Replace the filter		☆		▲		
3	**5-19**	Engine Cooling System						
		● Check the condition of rubber hose and clamp	▲					
	5-20	●Check the cooling water level	▲					
	5-21	● Clean the radiator blades					▲	
		●Replace coolant		☆				■
		● Check coolant concentration	▲					
4	**5-22**	Engine lubrication system and others						
		● Check the engine oil level (refill if necessary)						
	5-23	● Change engine oil		☆		▲		
	5-25	●Replace the oil filter		☆		▲		
		● Check the fan belt tension		☆	▲			
		● Check valve clearance					☆	▲
		● Check the tightness of the cylinder head					☆	▲
		● Check the tightness of engine supports		☆			▲	

Regular maintenance inspection schedule (continued).

Serial number	page number	Inspection and maintenance content	Maintenance cycle (total working hours)						
			10	50	100	250	500	1000	2000
5	5-24	Engine intake system							
		●Empty the dust container	▲						
		●Clean the air filter element			▲				
		●Replace the air filter element					▲		
6	5-26 5-31	Hydraulic system							
		● Check the hydraulic oil level (refill if necessary)	▲						
		● Remove water and dirt from the fuel tank				▲			
		●Replace hydraulic oil and oil suction filter							☆▲
		●Replace the return oil filter and pilot filter						☆▲	
		● Check system pressure					▲		
7	5-32 5-33	Battery							
		● Check the electrolyte level		▲					
		● Check acid and charging status					▲		
8	5-34 5-35	Reducer							
		● Check the oil level and refuel				▲			
		● Change engine oil						☆▲	
		● Check the tightening torque of the reducer connecting bolts		☆			▲		
9	5-36	track							
		● Check and adjust the tension of the track	▲						
10	5-37	Track rollers, support rollers and guide wheels							
		● Check the tightening torque of the track rollers		☆			▲		
		● Check the oil level of the guide wheel and the supporting wheel						▲	
11	5-38	lubricating							
		●Add lubricating oil to each lubrication point		▲					

▲ Follow normal cycle ☆ Performed during first maintenance ■ Once a year in spring and autumn

Routine Inspections

Perform a general routine check on the machine every day or every 10 hours.

1) Leakage check: Inspect all parts of the machine for any engine oil, water, or fuel leakage.

2) Check all elastic connections and attachments for scratches, fractures, or deformation.

3) Inspect the fixation and connections of the hydraulic system.

4)Inspect the appearance of mechanical components.

5)Verify the functionality of operational devices, control indicator lights, and various indicators.

6)Assess the engine's operational condition. Check the exhaust color for any issues, listen for abnormal sounds, and identify the source of any unusual noises.

Engine Fuel System.

Maintenance Instructions:

Tank Capacity :……73 liters

Oil Level Check: …… 10 hours

Drainage of Oil and Impurities from the Tank: ……100 hours

Clean the fuel tank: ……250 hours

Check the injection pressure. ……500 hours

Replace the fuel filter. ……250 hours

1. The oil level can be checked and refilled using the oil level display on the combination instrument located at the front right of the Cab. It is recommended to check the oil level daily or every 10 hours.
To prevent condensation, the fuel tank should be filled after each day's work. The refueling port is located at the front of the Fuel-Hydraulic oil tank.
2.Drain water and impurities from the tank
Remove condensate and sediment every 100 hours.
Loosen the oil drain plug to allow condensate and sediment to flow out. Once fuel begins to flow, promptly reattach the drain plug.
Depending on the quality of the fuel used, the user may determine the discharge interval for condensate.
3.Clean the fuel tank

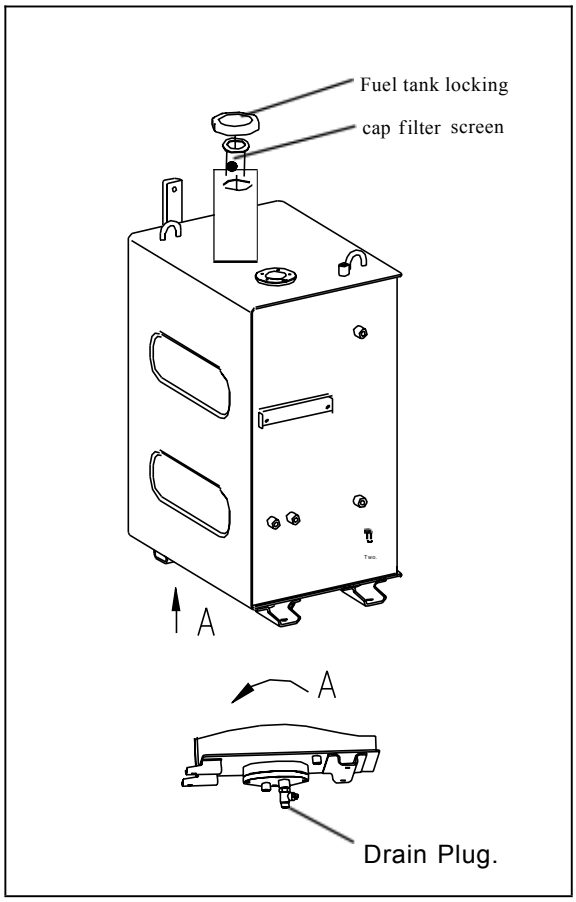

Clean every 250 hours.

1) Prepare a container to collect the discharged fuel.

2) Remove the drain plug and extract the filter located inside the fuel filling port, fill the fuel tank halfway, then drain it again.

3) Clean the fuel filter and reinstall it in its original position.

4) Reinstall the drain plug and fill the tank with fuel through the filter in the filing port.

5) Bleed the air from the fuel line.

Note: When flushing the interior of the fuel tank, do not use trichloroethylene; only diesel fuel should be used.

4. Check Fuel Injection Pressure.

Check every 500 hours!

Fuel injection pressure should be regularly checked according to the maintenance schedule, with a specified value of 22.56 MPa. Adjustments should be made if necessary. This check must be performed by our company's authorized agency!

The operational efficiency of the engine primarily depends on the condition of the fuel injectors; therefore, regular maintenance is essential to ensure their proper functioning.

The operator of the excavator should be attentive to signs indicating poor performance of the fuel injector to optimize engine usage:

A. Knocking sounds from a single or multiple cylinders; B. Engine overheating; C. Reduced efficiency; D. Black exhaust; E. Increased fuel consumption.

These signs may also result from the following issues; therefore, the following checks should be conducted first:

A. Poor sealing of the intake and exhaust valves; B. Incorrect adjustment of the fuel injector; C. Dirty or damaged fuel filter; D. Poor fuel quality; E. Presence of water in the fuel; F. Dirty or clogged air filter.

5. Exhaust of the Fuel Circuit.

If the fuel filter is replaced, the fuel pipeline is disconnected, the fuel filter is cleaned, or the fuel tank is unintentionally emptied, allowing air to enter the fuel circuit, the air must be purged before restarting the engine.

1) Open the fuel switch.
2) Loosen the exhaust screw on the fuel filter a few turns.
3) When no more bubbles appear, tighten the exhaust screw.
4) Open the exhaust plug located on top of the fuel injection pump.
5) Please position the shutdown lever to the STOP position and start the engine
using the starter motor for 10 to 15 seconds. 6) After venting, ensure that the exhaust plug is properly closed.

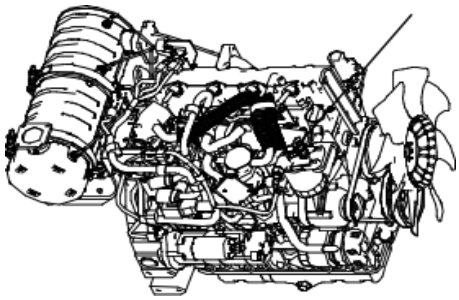

Note: Except during venting, always keep the exhaust plug on top of the fuel injection

pump closed; otherwise, it may cause the engine to stop.

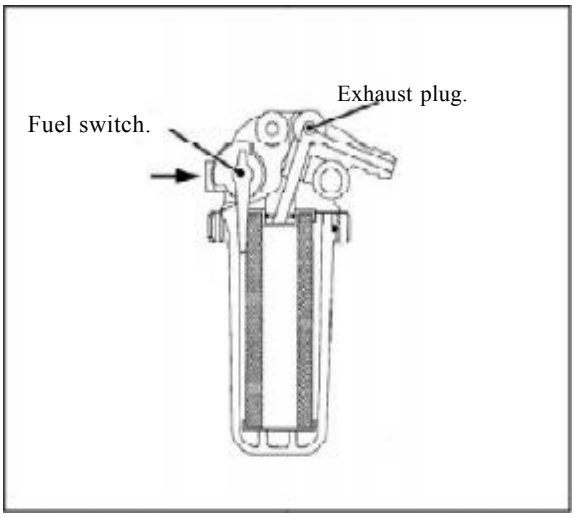
Exhaust plug.
Fuel switch.

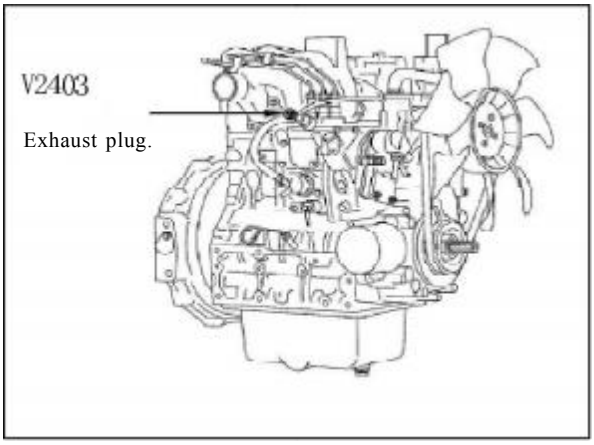
V2403
Exhaust plug.

6. The Diesel Pre-filter (Coarse Diesel Filter) should be replaced for the first time after 50 hours of operation with a new machine, and subsequently every 250 hours (refer to the section 'Replacing the Fuel Filter' later).

Drain the water and sediment from the separator daily.

1)Turn off the engine. Manually open the drain valve by turning it counterclockwise approximately 3.5 turns until the valve descends 25.4 mm in) and begins to Row put ;
2) Drain the water from the separator until clean fuel is visible.
3) When closing the valve, rotate it clockwise until it is hand-tight.

Note: When closing the drain valve, do not overtighten. Excessive tightening can damage the threads.

7. Replace the fuel filter element.

The first replacement should be performed after 50 hours of operation for a new machine, and subsequently every 250 hours or every 3 months.

Ensure that only genuine filter elements are used.

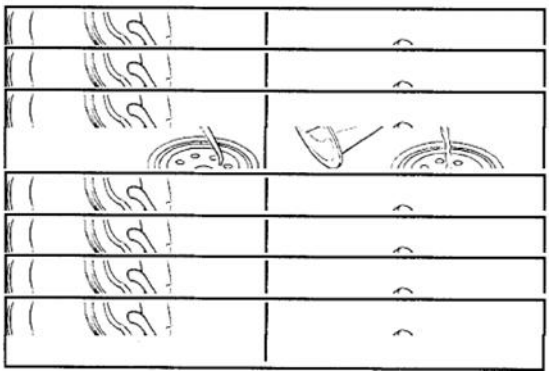

1) Remove the fuel filter.
2) Clean the sealing surface of the filter seat using a lint-free cloth.
3) Discard the O-ring.
4) Install a new O-ring.

3)

Note: Check for any old seals adhered to the filter seat. If an old seal is present; it may cause oil leakage.

5) Fill the new filter with fresh fuel and lubricate the new O-ring with clean engine oil.

6) Install the fuel filter in accordance with the manufacturer's specifications.

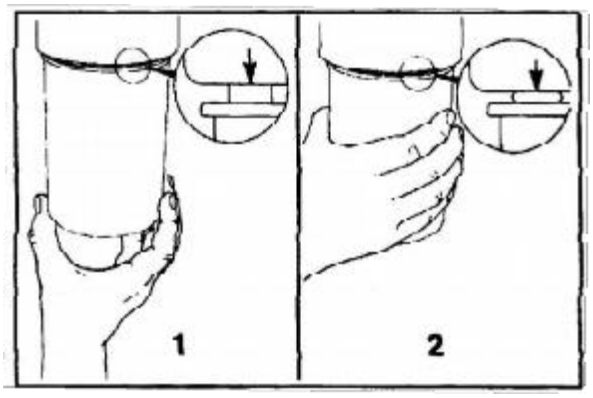

Note: To minimize the risk of fuel leakage, ensure that the fuel filter is securely installed but not overtightened.
Excessive mechanical tightening may damage the fuel filter.

After replacing the filter element, start the engine and check for any oil leakage from the sealing surface of the filter element.

No oil leakage.

Engine cooling system.

Maintenance Instructions
Radiator capacity……5.7 lifts
Coolant level check……Once a day or every 10 hours of work
Check the condition of rubber hose and
clamps.....…Once a day or every 10 hours of work
Cleaning radiator blades……..……Every 500
working hours Coolant replace….....……Once in spring and autumn every year
Coolant concentration check…….....…… Once a day or every 10 hours of work

1. Check the coolant level.

Before operating the new machine, verify the coolant level in the radiator; thereafter, check it daily or every 10 hours of operation.

Remove the radiator cap and inspect the coolant level. When the engine is cold, the coolant level should be 20mm below the filler neck.

Monitor the coolant level in the balance tank,When the engine is cold, the coolant level should be maintained between the maximum and minimum level.

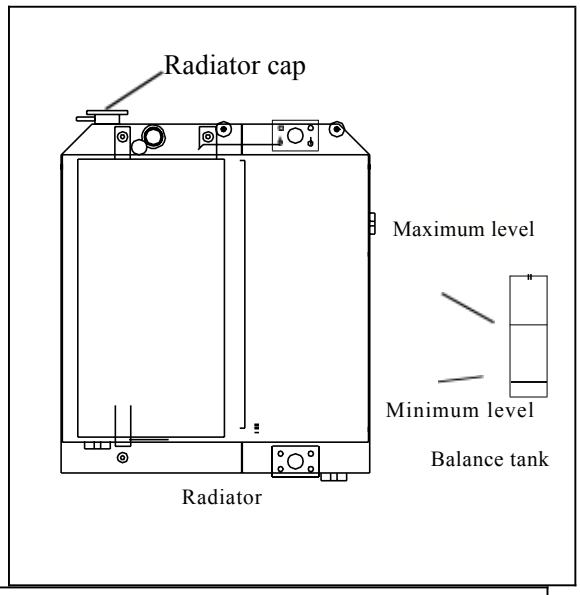

Warning: When removing the radiator cap, hot coolant may spray out. To remove the cap: After the system has cooled, slightly loosen the cap and wait for the pressure to be fully released. If the cap is removed too quickly, coolant may spray out, which could result in personal injury.

2.Inspect the condition of the rubber hoses and clamps.

Perform checks every 10 hours or daily.

Examine the rubber hoses, if any cracks are present or if they have hardened due to aging, replace them with new hoses.

Verify that the hose clamps are securely tightened.

if any looseness or damage is detected,

replace them immediately.

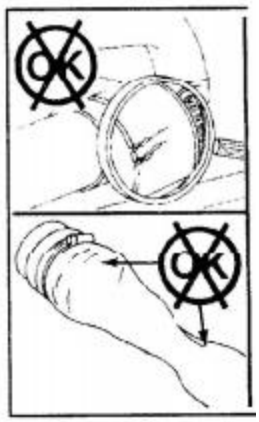

3. Clean and inspect the radiator fins.

Clean the radiator once every 500 hours.

Dust accumulation on the surface area of the radiator (water tank) can impair cooling efficiency; it should be cleaned promptly.

Open the engine cover and use high-pressure water or compressed air to blow away dust or debris, such as leaves, that may block the radiator and oil cooler fins. Additionally, clean the guard net in front of the oil cooler. For machines equipped with air conditioning, ensure that the condenser fins are also cleaned.

> ⚠ Warning: There is a serious risk of injury if compressed air, high-pressure water, or steam directly strikes the body, or if they are used to blow away dust or dirt. Always wear safety goggles, a dust mask, and other protective equipment.

Note: To prevent damage to the radiator, the nozzle of high-pressure water or compressed air must be positioned more than 500mm away from the surface of the radiator (water tank). Damaged radiators can lead to leaks or overheating. In dusty environments, the radiator should be inspected daily, irrespective of the maintenance schedule.

4. Coolant Replacement

The first coolant replacement should be performed after the new machine has operated for 50 hours. Subsequently, it should be replaced twice a year, once in spring and once in autumn.

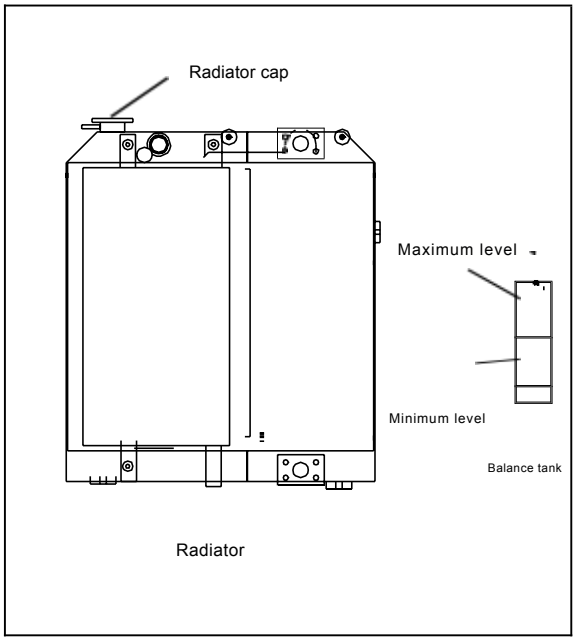

1) Remove the radiator (water tank) cap, and open the drain valve to allow the coolant to flow out.

2) Clean the cooling circuit, close the drain valve, fill it with the designated cleaning fluid, then start the engine and let it run at low speed for 10 minutes. Afterward, stop the engine and drain the cleaning fluid.

3) Close the drain valve again.

4) Fill the system with coolant and let the engine idle for a few minutes to ensure the coolant fills the entire cooling circuit.

5) Check the coolant level and replenish as necessary.

> ⚠ Warning: Do not open the radiator (water tank) cap when the engine is hot. The radiator cap should only be opened when the coolant temperature has dropped below 50°C. Failure to do so may result in high-temperature coolant or steam spraying out, which could cause personal injury!

5. Check the coolant concentration.

Before the onset of cold weather, the concentration of the coolant must be tested. The coolant should be capable of operating in environments with temperatures as low as -20 degrees Celsius; if the ambient temperature is lower, the specific gravity of the antifreeze should be increased.

Warning: The coolant is toxic. Keep children and pets away from it. If no longer in use, dispose of it in accordance with local environmental regulations

Warning: Antifreeze must be used in all climates! Do not use only water as a coolant, as this may lead to damage from corrosion.

Use the coolant supplied by Yuchai Heavy Industry; otherwise, there is a risk of damaging the cooling system.

Engine Lubrication System

Maintenance Instructions:

oil volume…….....……..……V2607 about 10.2 liters (V2403 about 7.6 liters)

Oil level check…….....……..……Every 10 hours of operation or every day

Change the oil or change the oil filter element…….....…….……250 hours per operation

1. Engine Oil Level Inspection

Check the engine oil level once before the new machine is put-into service and subsequently check every 10 hours.

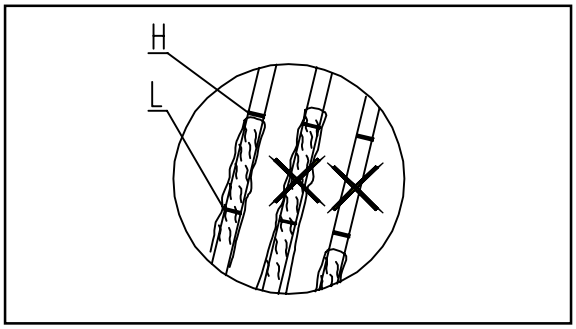

1) Position the excavator on level ground and turn off the engine.

2) Open the engine cover, remove the oil dipstick, and check the oil level on the dipstick; the engine oil level should be between the minimum (L) and maximum (H) marks.

3)If necessary, engine oil can be added through the oil fill port to ensure that the oil level reaches the specified value.

> Warning: After shutting down the engine, components and oil remain at high temperatures, which
>
> can cause serious burns. Wait for the temperature to decrease before beginning maintenance.

2. Change the engine oil.

The first oil change should be performed after the new machine has operated for 50 hours, and thereafter every 250 hours.

1) Park the excavator on level, ground, turn off the engine , and drain the engine oil while it is still warm.

2) Remove the oil drain plug to allow all engine oil to drain out.

> Avoid inhaling engine oil vapors, ingesting it, and prolonged contact with used engine oil.

3) Clean the oil drain plug and reinstall it properly; replace it if the sealing ring is damaged.
4) Open the oil filler cap.
5) Refill with new engine oil until the oil level reaches the 'Maximum mark (H) on the dipstick.
6) Secure the oil filler cap and allow the engine to idle for 5 minutes.
7) After the engine has been stopped for 10-20 minutes, check the engine oil level. Add engine oil if necessary.

3. Replace the engine oil filter element.

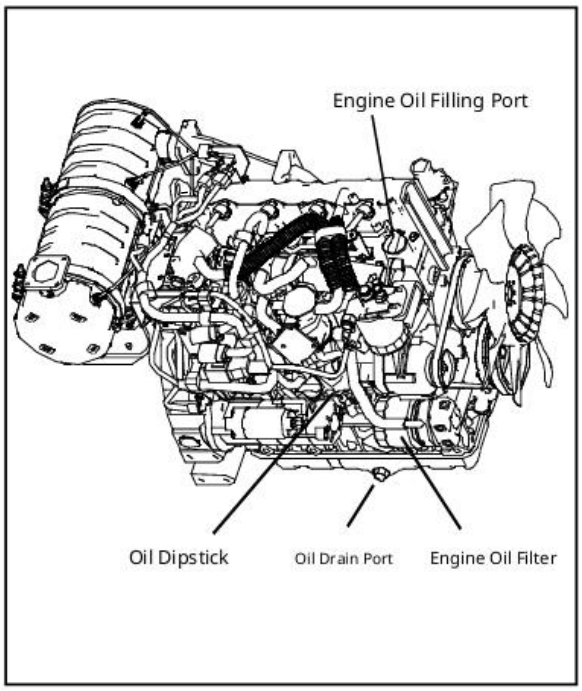

The first cleaning should be conducted after the new machine has operated for 50 hours, and thereafter every 250 hours for cleaning or replacement.
Replacement of the engine oil filter.

1) Clean the area surrounding the filter seat, remove the engine oil filter and clean the surface of the sealing gasket on the filter seat;
2) The engine oil filter contains two sealing gaskets, lubricate both gaskets.
3) Before installing the filter, apply a layer of engine oil to the surface of the sealing gasket.
4) Install the engine oil filter according to the manufacturer's specifications.
5) Operate the engine at low idle and check for any leakage from the oil filter.
6) Turn off the engine and wait for ,15 minutes to allow the engine oil to fully return to the components.
7) Check the oil level; if necessary, add engine oil to reach the maximum level indicated by the 'H'mark on the dipstick.

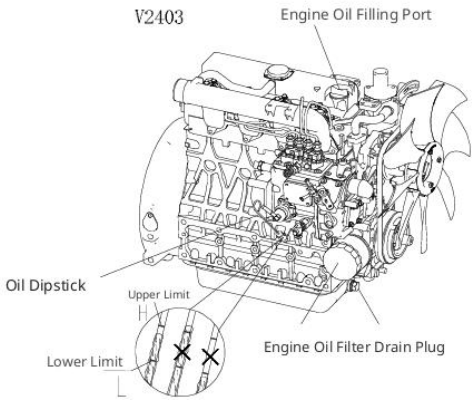

Engine intake system.

Maintenance Instructions

Dust tank cleaning cycle……Every 10 hours or every day
Air filter element cleaning cycle……100 hours of operation
Air filter element replacement cycle……..……500 hours per operation

1. Clean and Replace the Air Filter Element

When the air filter blockage alarm indicator on the digital detection instrument illuminates, or every 100 hours, the air filter element must be cleaned.
Before the air filter blockage alarm indicator light illuminates, it is essential to frequently clean the air filter element; otherwise, the air filter element will fail to provide its intended performance, and the cleaning effectiveness will diminish.

2. Replace the air filter element.

The filter element must be replaced if it has been cleaned 6 times or has been in use for 500 hours.

After installing the cleaned filter element, if the red piston of the dust indicator reappears quickly, even if the filter element has not yet been cleaned 6 times, it should be replaced.

3. Inspection of the Intake Pipeline

Inspect the intake pipeline daily for any signs of wear, damage to the pipeline, loose clamps, or ruptures that could potentially harm the engine.

If necessary, replace any damaged pipes and Tighten Loose clamps to ensure that the intake system is leak-free

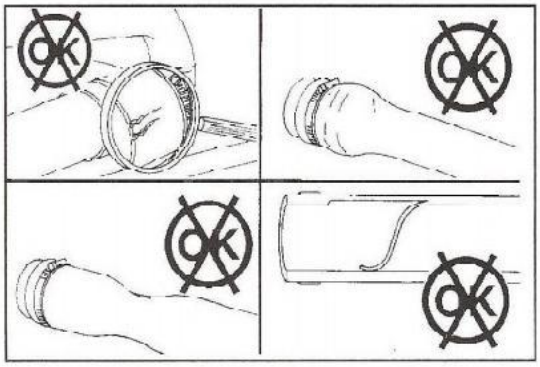

Additional Engine Maintenance

Warning: To prevent injury, do not perform maintenance while the engine is running. If maintenance must be carried out while the engine is operational, it should be conducted with at least two individuals present and in accordance with the following guidelines:

There must always be one person seated in the operator's seat, ready to shut down the engine at any time. All personnel must maintain communication with one another.

When operating near the fan, fan belt, or other rotating components, there is a risk of being caught by these components; therefore, special attention must be exercised.

Do not drop tools or other objects into or insert them into the fan or fan belt, as this may cause components to break or be ejected.

Warning: If the machine's noise level is excessively high, it may lead to temporary or permanent hearing issues. When performing engine maintenance and being exposed to noise for extended periods, it is essential to wear earmuffs or earplugs while working.

- Inspect the tension of the fan belt after 50 hours of operation for the initial check. Subsequently, perform inspections every 100 hours.
  To ensure the generator functions properly and to extend the lifespan of the belt, it is essential to maintain the correct tension of the fan belt.
  For a properly tensioned belt, apply a vertical force of 6 kg to the belt between the fan pulley and the generator pulley, which should result in a sag of approximately 5-10 mm.
  If the belt is found to be damaged, it must be replaced.

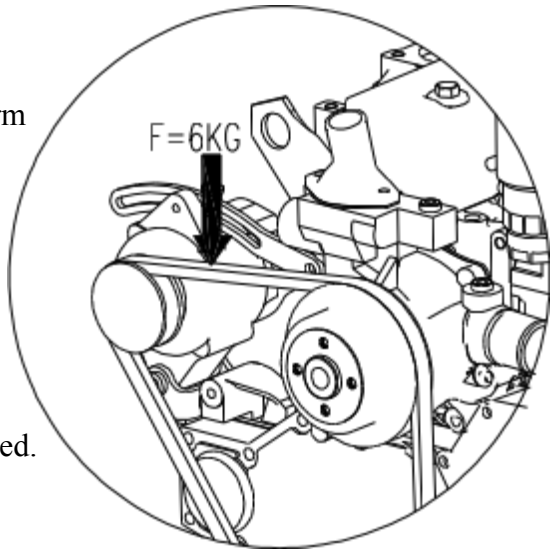

- For the maintenance cycle and specific methods of other engine components, please refer to the 'Diesel Engine User Manual that accompanies this machine.

Hydraulic System

Maintenance Instructions

Hydraulic tank capacity……70 liters

Oil level check……Every 10 hours

Filter element replacement……Every 1000/2000 hours

Hydraulic oil replacement……Every 2000 hours

Check system pressure……Every 500 hours

> Warning: Hydraulic oil or grease, if injected into the skin, can cause serious injury or death. Keep your hands and body away from the pressure oil leakage area. Use cardboard or paper to check for leaks. If hydraulic oil accidentally injects into the skin, seek medical attention immediately.

> Warning: To prevent burns, maintenance should only be performed when the hydraulic oil has cooled down or before daily operations when the oil is cold. When removing the oil filler flange cover, slowly rotate the cover to release internal pressure and prevent oil from spraying out.

1. Check the oil level in the hydraulic oil tank.
Check the hydraulic oil tank's oil level every 10 hours.

1) Ensure the machine is parked on a level surface.

2) Start the engine to initiate the reciprocating motion of each oil cylinder.

3) Retract the arm oil cylinder, extend the bucket oil cylinder, then lower the bucket to the ground and place the bulldozer blade on the ground. Turn off the engine as illustrated in the diagram.

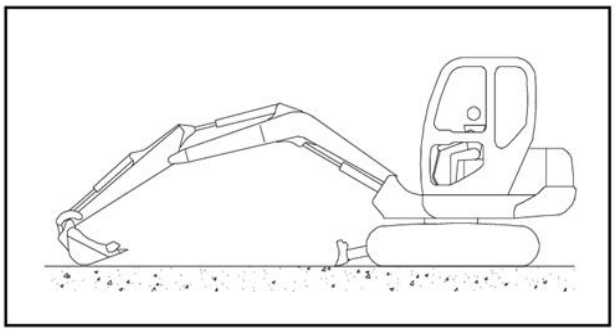

4) Check the hydraulic oil level using the level gauge located on the hydraulic oil tank. The hydraulic oil level can be observed through the oil dipstick tube (as indicated in the diagram at ①).

The hydraulic oil level must be clearly visible within the dipstick range; do not overfill the oil, as this may obstruct visibility of the oil level in the dipstick tube. Overfilling can lead to damage to the hydraulic oil circuit or oil spillage. If overfilled, stop the engine and drain the excess oil from the drain plug after the oil has cooled. If the dipstick indicates that the oil level is too low or if the oil level is not visible, promptly add oil through the filling port located at the top of the hydraulic oil tank.

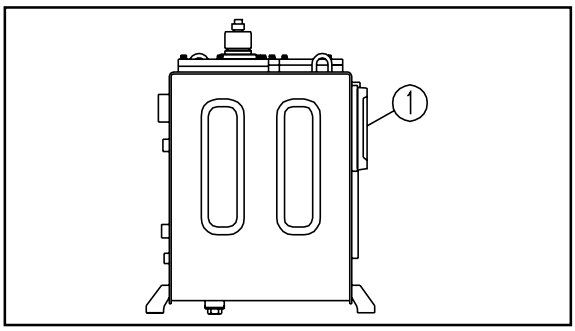

Note: The hydraulic oil level will fluctuate with the increase in oil temperature during operation. Prior to operation, the oil level should be positioned in the middle of the oil gauge. During normal operation, as the oil temperature rises, the oil level will approach the upper end of the oil gauge.

2. Remove moisture and contaminants from the hydraulic oil tank.
Drain the hydraulic oil tank of moisture and contaminants every 250 hours.
1) After stopping the machine and waiting for the oil temperature to drop or before starting work every day, drain Air in the tank.
2) Slowly loosen the drain valve or drain plug at the bottom of the fuel tank (as shown in the figure) shown).
3) Drain water or dirt until clear and transparent hydraulic oil is discharged Close the oil drain valve again or tighten the screw plug.
4) If the oil level in the oil tank is insufficient, add oil.

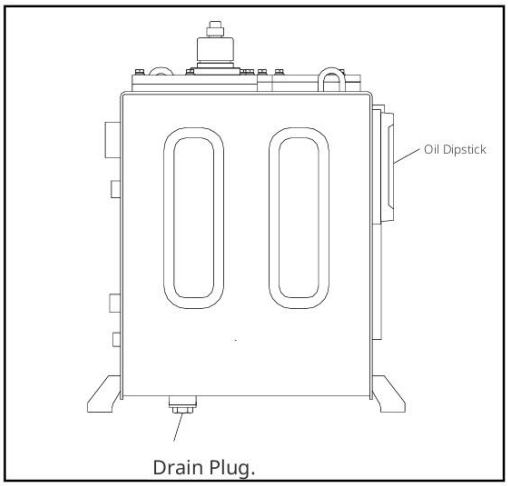

2. Replace the hydraulic oil and clean the hydraulic tank. The suction filter should be replaced after the first 2000 hours of operation, and subsequently every 2000 hours for replacement and cleaning.

Warning:
1) To prevent burns, oil should only be drained after the hydraulic oil has cooled down or before daily operations when the oi is cold.
2) When removing the oil filer flange cover, slowly rotate the cover to release internal pressure and prevent oil from spraying out.
3) During the oil change, ensure that water, dirt, sand, or other contaminants do not enter the oil tank

Oil Change Procedure:

1) Position the excavator on level ground.
2) Slowly loosen the air filter screw on the upper cover of the oil tank (as shown in the diagram on the right). For air filters equipped with a pressure relief button, simply press the relief button to release the internal air pressure of the oil tank. Then loosen the bolts on the oil tank cover to remove the cover of the return filter.
3) Prepare a clean, empty bucket and use an oil pump or a clean hose to extract the oil. Please drain the hydraulic oil.
4) Similar to the method for draining water and contaminants from the oil tank, loosen the oil drain valve or drain plug at the bottom of the tank to completely remove any residual oil.
5) Remove the suction filter assembly and unscrew the suction filter element. Replace it with a new suction filter (with an O-ring inside the groove), align it with the flange pipe opening, and adjust the spring seat to ensure a gap greater than 10mm with the flange cover. Once adjusted, secure it with the nut below and press the cover's protrusion onto the upper end of the rod.

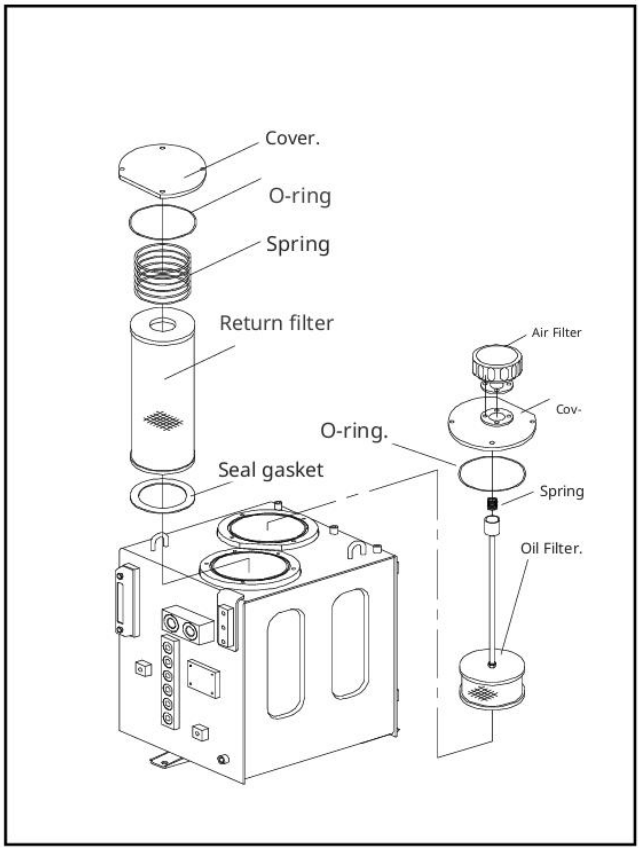

4. Bleed the air from the hydraulic system.

A. Release the air from the pump

1) Loosen the vent plug located at the discharge port and check for any oil flow. Venting is complete.

2) Once venting is complete, tighten the plug.

Note: Operating the pump without it being filled with oil will cause it to generate abnormally high temperatures, leading to premature damage.

B. Release the air between the pump and the hydraulic oil tank

1) Start the engine and maintain operation at low to medium speed.

2) Gradually operate the working device for approximately 5 minutes to remove any trapped air.

Note: Failing to expel the air between the pump and the oil tank while running the engine at high speed may result in the pump generating excessively high temperatures, potentially damaging the pump.

C. Remove the air from the oil cylinder.

1) At low engine speed, extend and retract the oil cylinder to a position approximately 100mm from the end of the stroke a total of 45 times. (Ensure that you do not extend or retract to the end of the stroke.)

2) Next, operate each oil cylinder to its stroke end 3 to 4 times.

3) Finally, operate each oil cylinder to its stroke end 45 times to ensure complete air discharge.

Note: If the engine is started and immediately runs at high speed, or if the oil cylinders are operated to their stroke ends, the air inside the oil cylinders may damage the piston seals, resulting in damage to the oil cylinder

B. Discharge the air from the swing motor (when the oil inside the swing motor housing is discharged).
Note: During the exhaust process, the machine must not be rotated under any circumstances.
1) Idle the engine, loosen the exhaust plug, and check whether oil flows out from the exhaust plug.
2) If no oil flows out, remove the exhaust plug and add hydraulic oil into the motor housing.
3) After completing the exhaust, securely tighten the exhaust plug.
4)Finally, operate the engine at low idle and slowly rotate the upper body of the machine to the left and right at least twice each, to ensure complete and thorough exhaust.
Caution: Failure to discharge the air inside the motor may result in damage to the swing motor bearings.

E. Discharge the air from the travel motor (when the oil inside the travel motor housing is discharged).

1) Operate the engine at idle speed and loosen the vent plug. If oil flows out, tighten the plug.
2)Operate the engine at idle speed, rotate the working device 90 degrees so that it is positioned on one side of the track (as illustrated in the diagram on the right).
3)Use the working device to lift the machine, allowing one side of the track to be slightly off the ground. Rotate the track for 2 minutes in an unloaded state. Repeat this action on both sides of the track, ensuring even rotation of the track forward and backward.

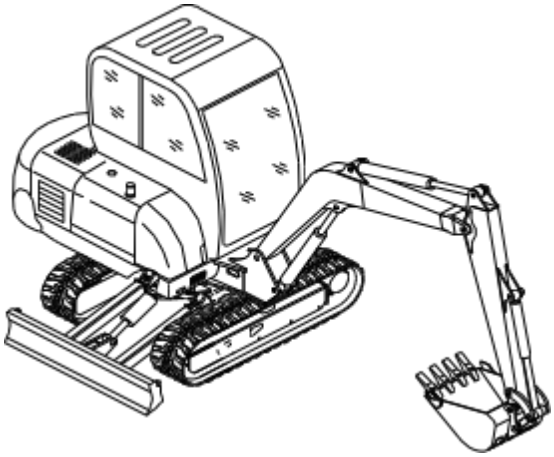

F. Vent the air from the attachment

If an attachment is installed, run the engine at idle and actuate the attachment pedal several times (approximately 10 times) until air is expelled from the hydraulic line of the attachment.

Attention:

1.If the manufacturer specifies a specific venting method, adhere to their prescribed procedure.
2.After completing the venting operation, turn off the engine and allow the machine to rest for at least 5 minutes before commencing operation, to eliminate air bubbles in the hydraulic oil cylinder.
3. During inspection, ensure there are no leaks; wipe off any spilled oil.
4. After completing the exhaust operation, check the oil level. If it is low, add oil as necessary.

5. Replace the return oil filter element.

For a new machine, the first replacement should occur after 1000 hours of operation, followed by replacements every 1000 hours thereafter.

1) Slowly loosen the upper cover of the fuel tank (as illustrated in the diagram on the right) to relieve internal air pressure.

2) Screws (for the pressure relief button; the empty filter only requires pressing the pressure relief button).

If applicable, relieve the internal air pressure of the fuel tank, then loosen the upper cover.

Remove the bolts from the return oil filter cover and take off the cover.

3) Slowly remove the return oil filter. Before replacing it, ensure that the seal of the return oil filter is intact.

At the bottom position of the pipe, align the new return oil filter with the pipe and insert it.

Insert the corresponding spring and cover, ensuring proper installation.

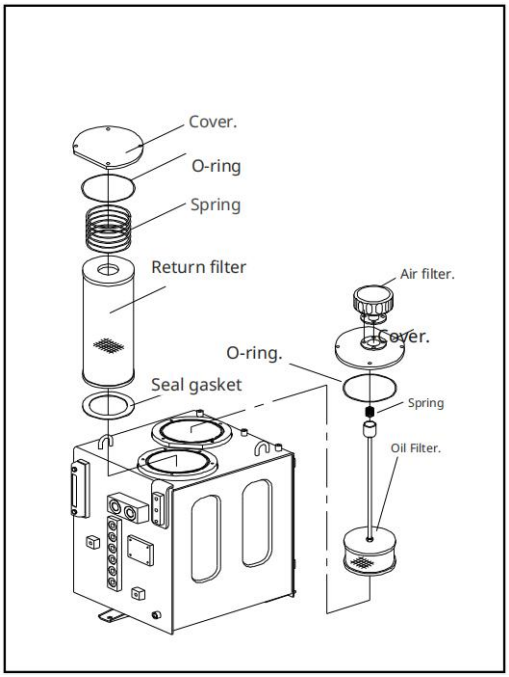

5. Replace the pilot filter element. The initial maintenance time and interval for the pilot filter element is 1000 hours.

Note: Before disassembling the filter element, ensure that the pressure inside the hydraulic oil tank is released.

1) Unscrew the oil filter housing.

2)Remove the filter element.

3)Place the O-ring into the groove of the filter head

4)Before installing the new filter element, apply a layer of hydraulic oil to the sealing surface of the filter element and insert it into the filter head.

5)Clean the oil filter housing and the filter element installation pin, ensuring that no dirt, dust, or water enters the interior of the oil filter housing.

6)Tighten the oil filter shell and filter head with a torque of 25 to 35 N·m.

7) Properly connect the pipelines and slowly start the engine. Run continuously for 35 minutes to expel air from the system.

8)Park the machine on level ground, stop the engine, and check the oil level. If necessary, add oil. Please ensure that the oil level does not exceed the maximum limit specified.

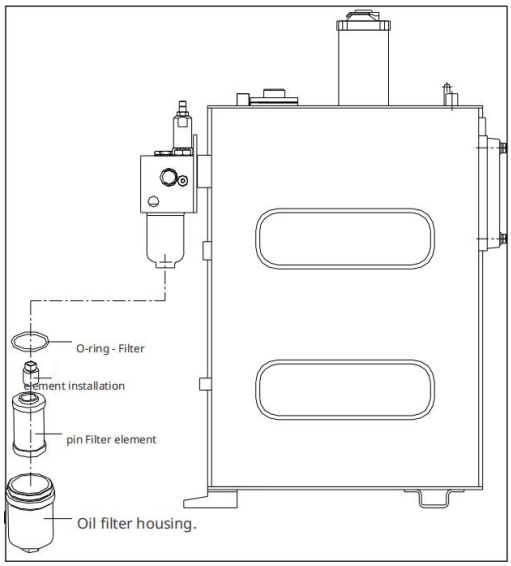

Replacement cycle for the hydraulic oil filter when using attachments (such as a breaker).
When using a hydraulic hammer (it is recommended not to use a hydraulic hammer on new machines), the contamination of the hydraulic system increases, leading to accelerated corrosion. Compared to the excavation device, the replacement cycle for hydraulic oil and filters should also be shortened accordingly to prevent damage to the hydraulic pump and other hydraulic components. The recommended replacement cycles are as follows:

Hydraulic hammer operation rate.	Hydraulic Oil Replacement Interval (Hours)	Filter Element Replacement Interval (Hours)
50%	11000	Return Oil Filter Element: 750 hours; Suction Oil Filter Element: 1500 hours.
100%	500	Return Oil Filter Element: 500 hours; Suction Oil Filter Element: 1000 hours.

Note: When using the hydraulic hammer, the system pressure must be adjusted appropriately according to the specifications of the hydraulic hammer.

Battery

Warning: 1) The battery contains sulfuric acid, which is highly corrosive. Keep away from children. Users should exercise caution when handling the battery. Always wear protective goggles and rubber gloves. In the event that sulfuric acid splashes into the eyes, on the skin, or onto clothing, rinse immediately with copious amounts of water. If the condition is severe, seek medical attention promptly.

2) The battery produces hydrogen and oxygen while charging. If it comes into contact with an open flame or if the exhaust port becomes blocked, it may result in an explosion. Therefore, the battery must be kept away from open flames to prevent short circuits.

3) The battery casing is constructed from polypropylene, which is classified as a flammable material. It should be kept away from open flames.

1.Battery Storage

1) This series of products consists of maintenance-free lead-acid batteries, which should be stored in a dry, clean, and well-ventilated environment at temperatures between 5°C and 25°C. They must be kept away from direct sunlight and at least 2 meters from heat sources. Excessively high ambient temperatures can significantly impact the battery's performance.

2) The battery must not be inverted or laid flat, and it should not be subjected to any mechanical impact or heavy pressure.

3)The storage period for this series of batteries at room temperature is 6 months, during which the battery generally does not require
recharging for use. Batteries stored for more than 6 months can still be utilized after recharging.

2.Battery Charging

In the later stages of charging, the battery produces hydrogen and oxygen through the electrolysis of water, leading to water loss. The lower the charging voltage, the greater the water loss. This series of batteries does not require water addition during operation; therefore, constant voltage charging is highly recommended, while constant current charging should be avoided whenever possible.

1.1 Supplementary Charging of the Batter

2.1.1) Constant Current Charging Method

Charge the battery at a current (A) equal to one-tenth of its rated capacity for a duration of 24 hours.

2.1.2) Constant Voltage Charging Method.

Charge the battery at a constant voltage of 16V for 16 hours, ensuring that the maximum current does not exceed 25A.

2.2 Normal Charging of the Battery.

2.2.1) Charge the battery at one-twentieth of its rated capacity (A) for 20 hours until the terminal voltage reaches 14.4V, then continue charging for an additional 23 hours.

2.2.2) Charge the battery at a constant voltage of 16.0V for 24 hours, ensuring that the maximum current does not exceed 25A.

1)Gases will be generated during battery charging; therefore, it is essential to regularly check that the battery's vent holes are not blocked to prevent the risk of explosion.

2)When charging the battery, the positive terminal of the charger must be connected to the positive terminal of the battery, and the negative terminal of the charger must be connected to the negative terminal of the battery. Reverse charging is strictly prohibited.

3)During the charging process, if the temperature of the battery's electrolyte exceeds 45°C, the charging voltage or current should be appropriately reduced to prevent excessive temperatures from causing electrolyte splashing.

4)Do not charge a frozen battery. A frozen battery should first be brought to a warmer indoor environment to thaw before charging.

3.Battery Installation

1)Before installation, please pay attention to the safety symbols on the battery label to prevent any unnecessary accidents.

2)Prior to installing the battery, apply a small amount of petroleum jelly to the terminals to prevent corrosion. Ensure that the connections are secure and reliable. Striking the terminals is strictly prohibited, as it may cause them to loosen and lead to battery acid leakage.

3)When installing the battery, first connect the positive terminal of the battery to the positive terminal of the vehicle's generator and then connect the negative terminal of the battery to the negative terminal of the generator.

4) Secure the battery firmly to the battery rack using fixed or lower fixed methods to prevent damage to the battery due to looseness.

4. Battery Maintenance.

1)The battery cover is equipped with an indicator that displays the battery's charge status. When the indicator shows green, the battery can be used normally . When the indicator shows black, the battery should be charged promptly. If the indicator shows white, the battery must be replaced immediately.
2) Batteries that have lost charge for various reasons during use should be charged promptly to prevent performance degradation due to sulfation.
3) During both the usage and charging processes of the battery, it is crucial to prevent overcharging to avoid premature failure caused by excessive water loss, grid corrosion, and lead paste shedding.
4) For batteries that have been installed and used, if they are not utilized for an extended period (generally exceeding 15 days), please remove them from the vehicle and store them in a well-ventilated and dry location. Recharge the battery every 36 months, depending on whether the indicator has darkened.
5) If you have any questions regarding the battery, please contact the dealer promptly for assistance.

Reducer

Maintenance Instructions
Rotary gear reducer lubricating oil capacity……...…….……1.6 liters
Travel gear reducer lubricating oil capacity…….…….....……..…1 liter (each side)
Check the lubricating oil level and refuel…….....…Check the lubricating oil level and refuel
Change the lubricating oil……...……...……1000 hours per operation
Check gear reducer connecting bolt tightening torque…….....……500 hours per operation

1. Check the Lubricating Oil Level of the Traveling Reducer and Add Oil

⚠	Warning: The oil inside the reducer will heat up shortly after the machine begins traveling. After shutting down the engine, the traveling reducer and oil will still be at high temperature, which can cause severe burns. Before commencing operation, it is essential to wait for the oil to cool down. Loosen the drain plug by two to three turns to relieve the air pressure inside the housing before removing the plug. Rapidly removing the plug is hazardous.

Perform a check every 250 hours.

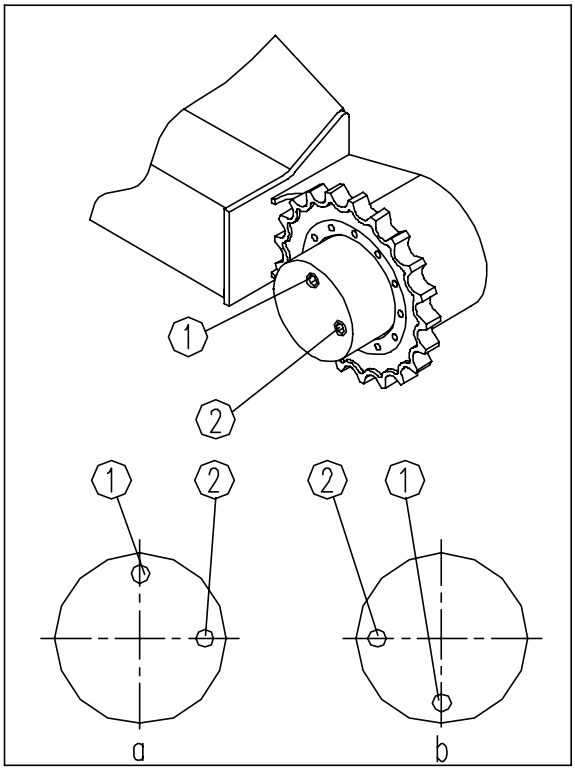

1) Prepare an Allen wrench.
2) Position the excavator on level ground.
3) Rotate the travel reducer until the two plugs on its outer end face are aligned as shown in figure, then turn off the machine.
4) Once the oil has cooled, carefully open plug ①.
5) After releasing the air pressure within the housing, securely tighten plug ① with a torque of 12 o 15 Nm.
6) Open plug ② and check the position of the oil level. The oil level should reach the lower edge of the plug hole.
7) If necessary, add engine oil (following the refueling method).
8) Clean plug ②, reinstall it on the reducer, and tighten it to a torque of 12 to 15 Nm.

2.Replace the lubricating oil (for each gearbox). The initial maintenance interval for the lubricating oil is 1000 hours.

1) Position the excavator on level ground.

2)Rotate the reducer so that plug ① is in position b as shown in the diagram.

3) Drain the oil from the reducer when it is at operating temperature.

Caution: Avoid contact with hot oil to prevent burns.

4) Loosen plug Ⓗ to initiate oil drainage and then loosen plug ② to ensure complete drainage.

5)Rotate the reducer to position the plug as indicated in the diagram.

6)Introduce the specified lubricant through fill hole ① until oil begins to flow from the oil level check hole ②.

7) Re-tighten plugs ① and ②, applying a torque of 12 to 15 N·m.

3. Verify the tightening torque of the connection bolts between the traveling reducer and the swing reducer.

A. For the connection bolts of the traveling reducer, conduct a firmness check after the new machine has operated for 50 hours and thereafter check every 500 hours.
The required tightening torque for the bolts connecting the reducer to the chassis and drive wheel is 150 ± 10 N.m.

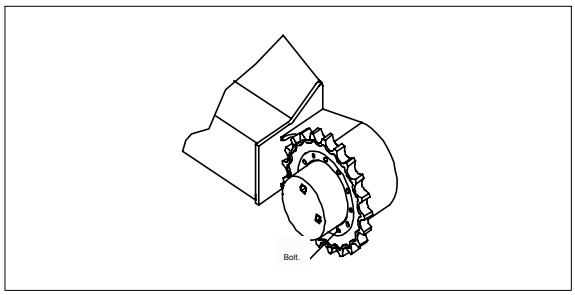

B. Conduct a firmness check for the connection bolts of the swing reducer.

Perform the initial check after 50 hours of operation, and subsequently check every 500 hours.

The tightening torque of the bolts connecting the reducer to the platform should be between 195 and 250 N.

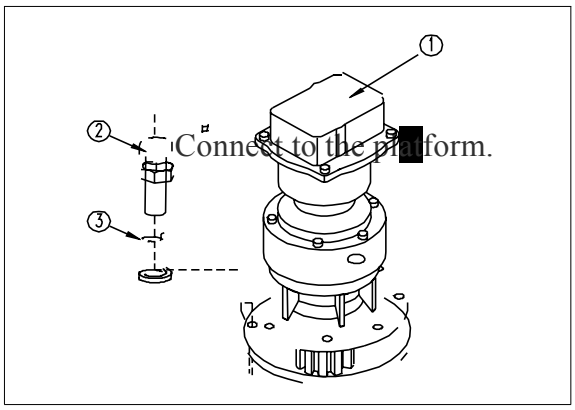

Track

Check and adjust the tension of the tracks every 10 hours.
1) Park the excavator on a level and stable surface.
2) Remove the cover from each track frame (indicated as 1 in Figure 2) to expose the grease fitting of the tensioning device (shown in Figure 2).
3) To loosen the tracks, first loosen joint @ (shown in Figure 2) to allow grease to flow out, ensuring that the deflection) , of the track branch f is controlled within 2-4 cm (as shown in Figure 1), and then retighten.
4) To tense the track, connect the grease gun's nozzle (provided as a random tool) to nozzle @ (refer to Figure 2). Then, use the grease gun to lubricate until the branch amount on the track is maintained within a deflection of 2-4 cm (refer to Figure 1).
5) After daily operation, the machine should have any accumulated mud on the track frame cleaned.

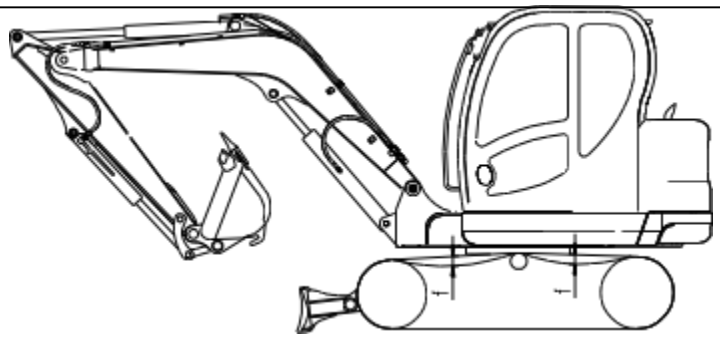

Figure 1

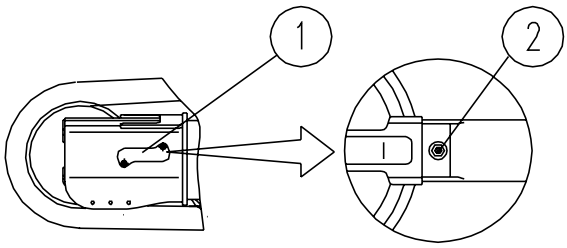

Figure 2

Warning: 1. Do not strike the tension spring of the track. The spring, due to the immense pressure it endures, may fracture explosively, resulting in personal injury. Do not disassemble the spring while it is in a stretched state.

2. Do not tighten the large nut shown in Figure 2, as this may cause the valve body to dislodge, resulting in personal injury.

Support roller, carrier roller, and guide roller

1. Verify the tightening torque of the support roller.

Conduct the first inspection after 50 hours of operation for a new machine and subsequently inspect every 500 hours.
If any bolts are found to be loose, they must be removed, and the thread locking agent between the bolt threads should be thoroughly cleaned. Afterward, apply thread locking agent to the threaded connection area and tighten according to the specified torque.

If it is necessary to replace a bolt, it must be replaced with one of the same specification and strength grade.

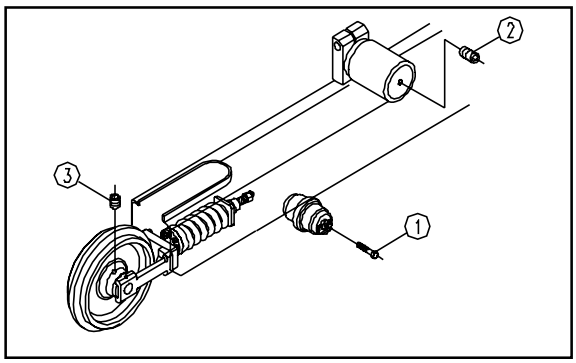

1. Support Wheel Bolt.
2. Idler Oil Plug.
3. Guide Oil Plug.

2. Check the engine oil level of the idler and guide wheels.

Check once every-1000 hours.

1) Remove plugs ② and ③ from the idler and guide wheels, respectively.
2) Use an oil can to add oil.
3) When oil flows out of the filling hole, re-tighten plugs ② and ③.

Lubrication

Lubricate all lubrication points of the machine

every 50 hours.Lubrication Steps:

1) Start the working device and lower the bucket to the ground.
2) Lower the bulldozer blade to the ground.
3) Turn off the engine.
4) Clean the filling spouts of the oil cups.
5) Lubricate all lubrication points and wipe off any excess grease that has been extruded.

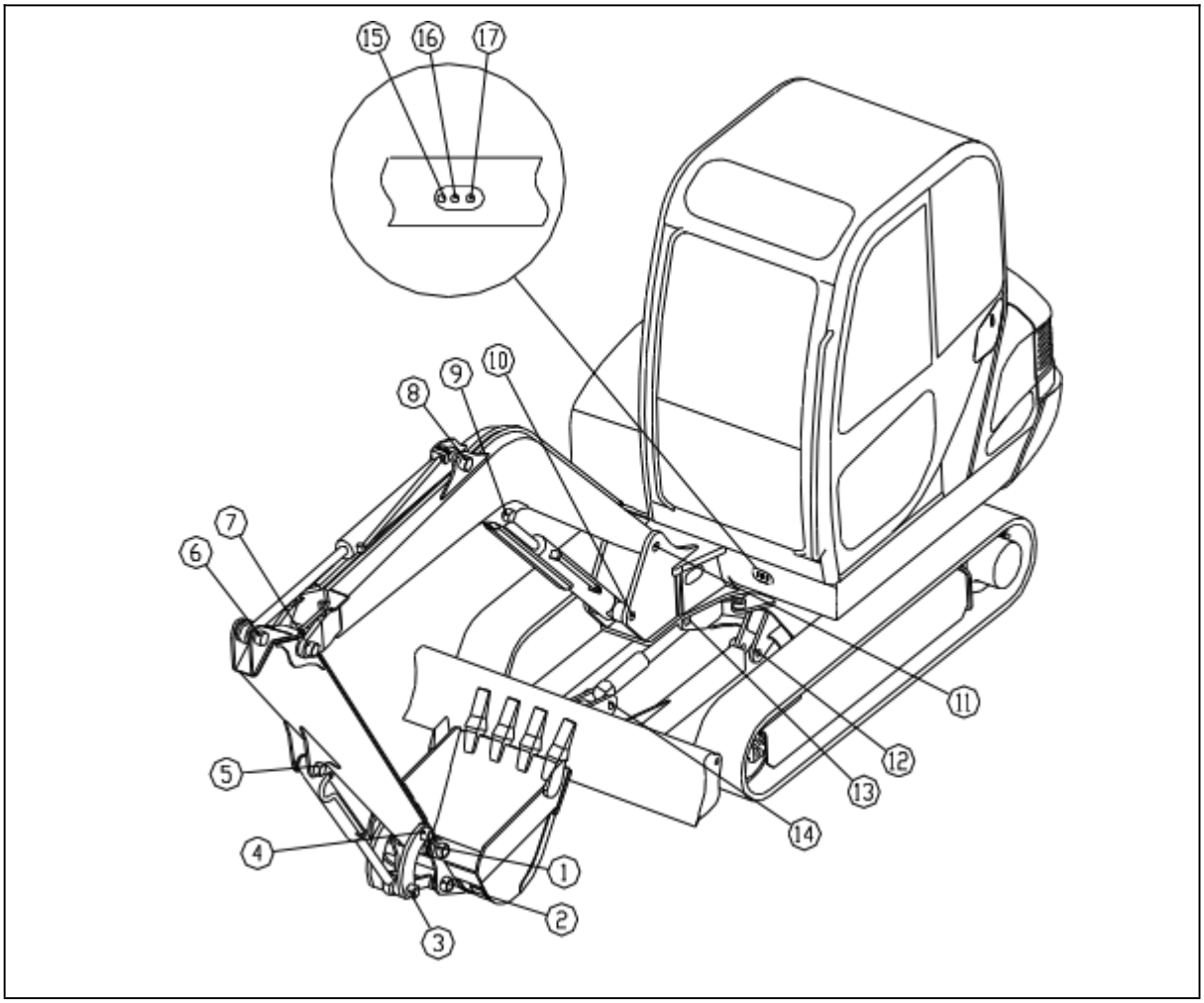

1. Hinge point between the bucket rod and the bucket
2. joystick and Bucket Hinge Point
3.joystick and Linkage Hinge Point
4.joystick and Bucket Rod Hinge Point
5. Bucket Oil Cylinder Rear Lubrication Point
6.Bucket Rod Oil Cylinder Front Lubrication Point
7.Hinge point between the bucket rod and the boom.
8. Bucket Rod Oil Cylinder Rear Lubrication Point
9. Boom Oil Cylinder Front Lubrication Point
10. Boom Oil Cylinder Rear Lubrication Point
11. Boom and Platform Hinge Point
12.Bulldozer Blade and Chassis Hinge Point
13. Bulldozer Oil Cylinder Lubrication Point
14. Bulldozer Oil Cylinder Head Lubrication Point
15. Roller Path Lubrication Point
16,Roller Path Lubrication Point
17. Roller Path Lubrication Point

Air Conditioning

This machine is equipped with an air conditioning system in the cab, with the operation knobs located on the left control box panel of the cab.
For specific operation and maintenance of the air conditioning system, please refer to the air conditioner user manual that accompanies this machine, in addition to this user manual.
1. Precautions for Air Conditioning Maintenance and Care

1) If the 'snowflake' graphic on the control screen is flashing, this indicates a fault in the cooling system pressure, which prevents the compressor from operating and the system from cooling. In this case, a professional technician should be contacted for repairs.

2) If the system automatically shuts down after starting (the control screen lights up and then turns off automatically), or if the 'fan' graphic on the screen is flashing (for approximately 5 seconds), this indicates that an abnormal power outage is occurring or has occurred during the last startup (such as turning off the power switch without shutting down the air conditioning control, blowing a fuse during the air conditioning process, or poor contact in the air conditioning power line, etc.).

If the 'fan' graphic stops flashing 5 seconds after startup, the air conditioning can continue to be used; if it cannot start or shuts down automatically after starting, check for any power outages or poor connections in the air conditioning power line.

3)To protect the compressor, this machine is programmed to maintain an interval of approximately 15 seconds between every two compressor starts. Therefore, if you select cooling and the time since the last cooling selection is less than 15 seconds, the compressor will not operate. This is normal behavior. Once the time interval reaches 15 seconds, the air conditioning system will automatically accept your cooling command.

4)The dust filter of the air conditioning assembly must be cleaned regularly, at least once a month. Failure to do so may result in dust and dirt clogging the filter, which can obstruct the flow of indoor air through the heat exchanger and negatively impact the effectiveness of the air conditioning system.

5) Under special conditions (such as humidity, a moderately warm environment, using external circulation air, low-speed operation of the blower, a dirty or blocked dust filter, or foreign objects obstructing the return air inlet), prolonged use of forced cooling may sometimes result in a noticeable decrease in airflow, or even a complete lack of airflow.

This indicates the formation of frost on the air conditioning evaporator. The frost on the evaporator's surface obstructs the airflow passage, resulting in poor cooling performance. However, this is not a fault.

At this point, simply pause the cooling, remove the blockage, and select high airflow. After a few minutes, you can resume cooling, and normal operation will be restored. After returning to normal use, do not simultaneously select the combination of low airflow, forced cooling, and external circulation modes; for example, you may use weak cooling or medium cooling.

6) When operating the heating system during winter, ensure that the engine water temperature has risen before use.

6) The heating core is connected to the engine radiator; therefore, if the heating core leaks, it will lead to a shortage of water in the radiator, resulting in engine overheating. In winter, it is equally important to protect the heating core from freezing and cracking as it is to protect the radiator. To prevent the coolant from freezing and causing damage to the heating core or radiator, please use the coolant specified by the manufacturer. If necessary, during winter when there is a risk of the coolant freezing, and if the machine will be idle for an extended period, please drain the coolant!

Please note: Damage to the heating core due to freezing in winter will not be covered under warranty. Furthermore, if the heating core is corroded and leaks due to the use of coolant not specified by the manufacturer, or if the hot water valve is damaged, this will also not be covered under warranty.

Refrigerants can easily cause frostbite to the skin, particularly to the eyes. Furthermore, when refrigerants come into contact with open flames, they can release toxic gases. Therefore, whenever it is necessary to disassemble the refrigeration system, ensure that the refrigerant is recovered first, preventing any spray from reaching the skin and eyes, before proceeding with the disassembly of the refrigeration system. The entire process must be conducted without any open flames!

2.Checking the Quantity of Refrigerant

Refrigerants can easily cause frostbite to the skin, particularly to the eyes. Furthermore, when refrigerants encounter an open flame, they can release toxic gases. Therefore, whenever it is necessary to disassemble the refrigeration system, ensure that the refrigerant does not spray onto the skin or eyes. First, recover or release the refrigerant, and then proceed to disassemble the refrigeration system. The entire process must ensure that there is no open flame present!

If there is a deficiency of refrigerant, the cooling performance will be significantly impaired. Check refrigerant level monthly or every 250 hours.
When the engine is idling at high speed, operate the air conditioning in the maximum cooling mode. Check the refrigerant level by observing the presence of bubbles in the sight glass on the drying bottle.

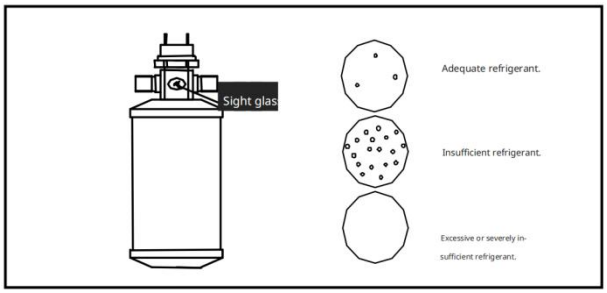

3. Check and adjust the tension of the air conditioning compressor belt every 250 hours.

A.Inspection

Apply approximately 6 kg of finger pressure to the center of the belt
between the drive pulley and the compressor pulley, and check its
deflection, which should measure approximately 5 to 7 mm

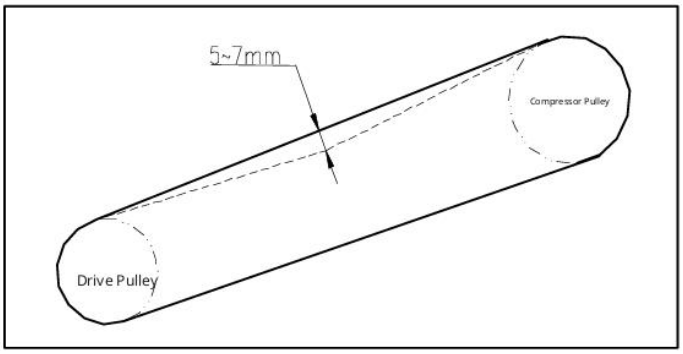

Inspect the pulley for any damage. If the belt has stretched, lacks adjustment allowance, or exhibits cuts or cracks, it must be replaced.

B. Adjustment

Loosen the bolts indicated in the diagram and use a small pry bar to gently pry the air conditioning compressor outward. After adjusting the belt to the
appropriate tension, retighten the loosened bolts. (If necessary, also loosen the two bolts securing the air conditioning compressor at the bottom.)

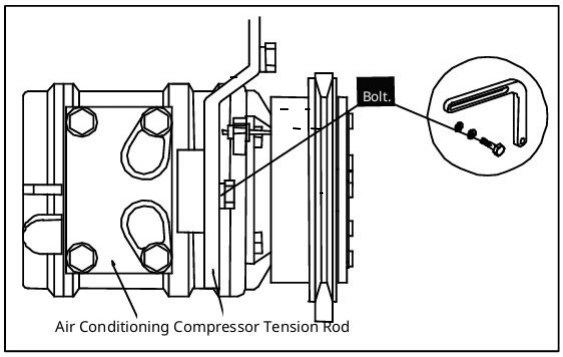

4. Regular Inspection Content for Air Conditioning

Serial Number	Inspection Item	Inspection Details	Inspection Frequency	
			Monthly	Quarterly
1	All Fasteners	Check for Any Looseness or Displacement	★	
2	Air Conditioning Belt	Tension and Wear	★	
3	Pipeline	Check for Any Abrasion or Cracking	★	
4	Joint	Check for Any Abrasion or Leakage		★
5	Electronic Fan	Is it operating normally?	★	
6	Wiring harness.	Is there any wear or signs of burning?	★	
7	Condenser.	Is there any dirt obstructing the surface?		★
8	Electromagnetic clutch (compressor).	Is there any slippage?	★	
9	Compressor.	Is there any unusual noise?		★
10	Refrigerant quantity.	Are there any bubbles in the sight glass?	★	
11	Dust filter.	Is there any dirt blockage?	★	

Replacement of bucket teeth.

Before the bucket teeth wear out, replace the bucket teeth.

> ⚠ Warning: When replacing bucket teeth, it is extremely dangerous if the working device unexpectedly moves due to improper operation. Therefore, before replacing the bucket teeth, ensure that the working device is in a locked state, turn off the engine, and securely lock all control levers. When replacing, wear the necessary protective equipment to prevent the locking pin from flying out.

Replace bucket teeth.

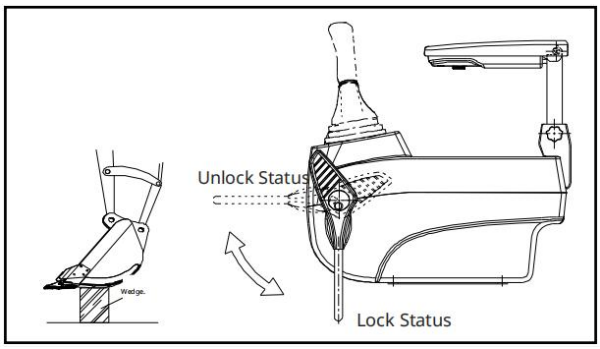

1)Position the bottom of the bucket on the block to facilitate the removal of the pin. Ensure that the working device is stable and that the bucket is level.

Next, rotate the safety lock handle on the left control box to the locked position, securing the entire machine, and turn off the engine.

2)Place a metal rod with a diameter slightly smaller than that of the pin on the pin head and use a hammer to strike the metal rod to drive out the pin, thereby removing the bucket teeth.

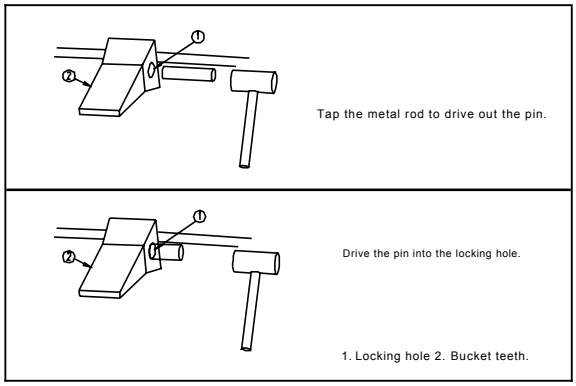

3)Clean the installation surface. Insert the new bucket teeth into the seat, push the pin part in by hand, and then use a hammer to drive the pin into the locking position to secure the bucket teeth to the tooth seat.

Washing the floor mat.

Clean the floor mat whenever it becomes dirty to prevent accidents caused by slippage or falls.

Warning: If the handle is accidentally touched, the working device or machine may move suddenly, leading to serious accidents. Therefore, before removing the floor mat, ensure that the machine is stabilized on solid level ground. Before standing up from the operator's seat, be sure to rotate the safety lock handle on the left control box to the locked position to secure the pilot.

Steps for Cleaning the Floor Mat:

1)Remove the floor mat from the cab.
2) Use a brush to remove dirt or rinse the floor mat directly with water.
3) Use a dry mop to thoroughly clean the floor inside the cab.
4)Once the floor mat has dried, reinstall it in the cab.

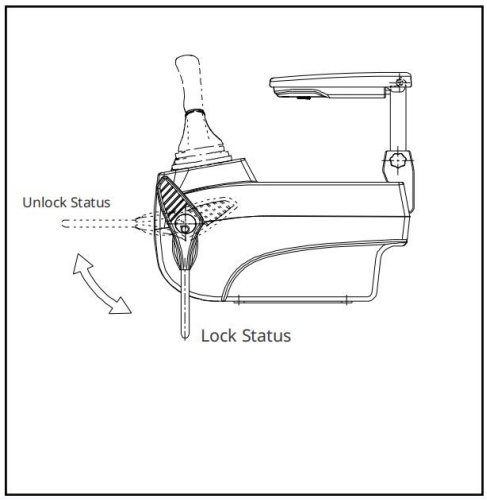

Maintenance of the Electrical System.

The electrical system of the excavator is a crucial component; maintenance of electrical components must be strictly performed according to the guidelines provided in the user manual. When inspecting and maintaining electrical components, ensure that the power is turned off.

1. First, check if the battery terminals are loose. The battery serves as the main power source for the entire electrical system; therefore, the terminals must be securely tightened to ensure a normal power supply.
2. Prolonged use of the excavator will inevitably lead to the accumulation of oil, dust, and other impurities on the wiring, which may cause short circuits or open circuits, resulting in machine faults. Consequently, every two weeks, inspect the condition of the wiring and clean the wires and terminals with a clean cloth.
3. Inspect the appearance of the electric wires. Check for any cracks or signs of aging. If any issues are found, a qualified electrician with relevant experience should be consulted to replace the wires.
4. Verify that the fuses of the electrical appliances are operational. If the appliances fail to work, first check whether the fuse has blown. If it has ,the fuse must be replaced. It is strictly prohibited to use wire or any other conductor as a substitute for the fuse.
5. If the electrical equipment is damp or the insulation layer of the wires is damaged, this poses a significant hazard as it can lead to electric leakage and cause machine faults. Do not wash the interior of the cab with water. When cleaning the machine, take care to prevent water from entering the electrical components.
6. Do not install any electronic components that are not specified by Yuchai Heavy Industry.
7. External electrical interference can cause faults in the electrical system; therefore, when installing a radio receiver or other wireless devices, please consult a Yuchai Heavy Industry dealer.
8.When working on the beach, ensure that the electrical system is thoroughly cleaned to prevent corrosion.
9.When installing the cab air conditioner or other equipment, it must be connected to a dedicated power source; the selected power source must not be connected to fuses, the starter switch, or relays.

6

Attachment Guidelines.

Safety Considerations.

Installing attachments or optional parts that have not been approved by Yuchai will not only affect the machine's lifespan but may also lead to safety issues.

Before installing any attachments that have not been approved by Yuchai, you must first contact a Yuchai dealer.

If you fail to contact Yuchai, we will not be liable for any accidents or damages.

1. Safe Operation of Attachments.

- Attachments provide powerful auxiliary functions. To prevent serious injury or damage, it is essential to use attachments correctly.
- Please read the manual for the attachment thoroughly; do not use the attachment until you have fully understood its contents.

If the manual is lost, kindly request a new one from the manufacturer or the sales company of the attachment.

- Based on the condition of the attachment, it is essential to install the necessary front guard on the machine.
- Given the condition of the attachment, vibration noise may hinder colleagues from effectively communicating operational instructions. Before commencing operation, designate a commander and establish the signals to be used.
- Do not perform side turning operations under heavy load conditions on slopes, as this poses significant hazards.

In comparison to machines equipped with buckets, those fitted with hydraulic breakers have a heavier load at the front of the working device and are inherently unstable. To prevent the risk of rollover, refrain from operating the machine when the attachment is turned to the side.

- When attachments are installed, the machine's rotation range and center of gravity change, which may lead to unexpected

movement. It is crucial to have a thorough understanding of the machine's condition.

- Before commencing operation, a warning line must be established around the machine to prevent personnel from entering the area. Do not operate the machine when individuals are present nearby.
- To prevent serious accidents resulting from improper operation, do not place your feet on the pedals except when actively operating them.
- When attachments are installed, if the attachment is retracted towards the machine body, it may interfere with the machine. Exercise caution when operating the attachment.

2.Disassembling or Installing Attachments.

When disassembling or installing attachments, it is essential to follow the steps outlined below to ensure safe operation.

- Perform disassembly and installation operations on solid, level ground.
- When two or more individuals are operating, ensure that signals are communicated and adhere to these signals during operations.
- Always use a crane when lifting or transporting heavy objects (over 25 kg).
- When disassembling heavy components, support the component prior to disassembly. Pay special attention to the center of gravity's position when lifting with a crane.
- Operating while lifting loads with a crane is hazardous. Prepare a support and ensure its safety status.
- When placing or removing attachments, ensure they are stable and will not tip over.
- Do not walk under loads lifted by the crane. Always stand in a safe area where there is no risk, even if the load were to fall.

Warning: Operating the crane requires a valid qualification certificate. Uncertified personnel are prohibited from operating the crane. For details regarding disassembly and installation procedures, please contact your Yuchai dealer.

Procedures for installing and removing attachments.

1. Disassembly Steps:

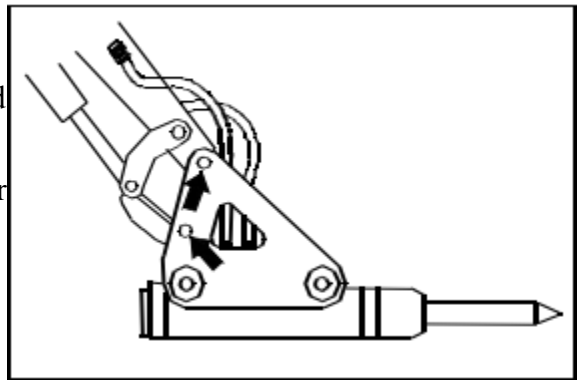

1) Place the attachment on the ground and turn off the engine.
2)Turn the ignition switch to the ON position and push the left control box to the free position.
3)Fully operate each working device control lever and attachment control pedal forward, backward, left, and right 2 to 3 times to relieve internal pressure in the hydraulic oil circuit.
4)After confirming that the oil temperature has decreased, lock the diverter valve on the inlet and outlet pipes connected to the dipper arm.
5)Remove the soft hose from the side of the attachment, then securely tighten the plug onto the two outlets after fitting it with a sealing washer.
6) Disassemble the two pins to remove the attachment. Then, proceed to install the bucket.
7) Wrap the unconnected ends of the two hoses of the hydraulic hammer with clean plastic bags to prevent dust ingress ensure the attachment is stored properly.

2.Installation Steps

1) Remove the bucket.

2) Position the attachment on a flat surface and sequentially connect the boom to the hydraulic hammer and the linkage to the hydraulic hammer using pin A and pin B.

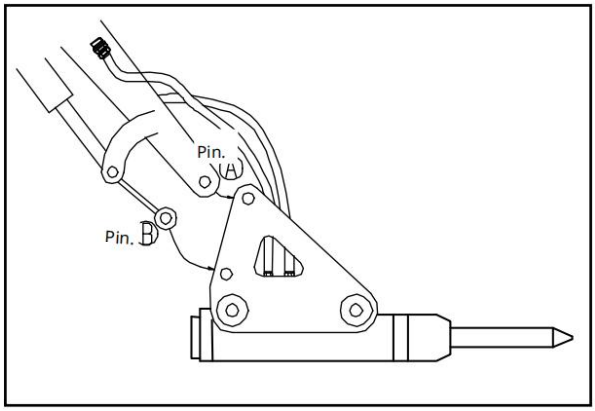

3)After confirming that the oil temperature has decreased, remove the plugs from both the low-pressure and high-pressure oil lines. Take care to prevent dust, dirt, or other contaminants from adhering to the hose connection areas. If the sealing gasket is damaged, replace it with a new one.

4)When connecting the attachment hoses, verify the direction of the oil flow and ensure that they are not connected incorrectly. The two attachment hoses on the left side have the high-pressure oil line above and the low-pressure oil line below, while the single attachment hose on the right side is the high-pressure oil line.

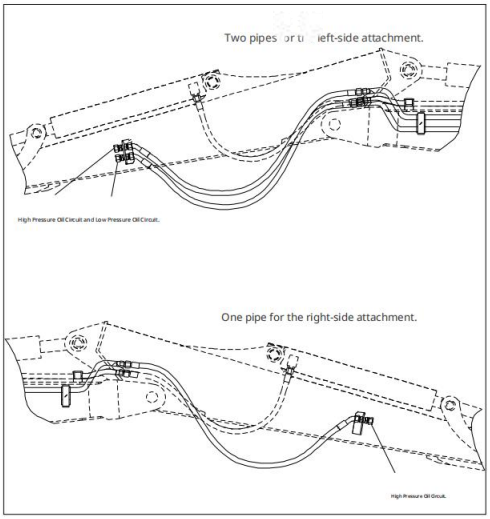

After installing the attachments, please confirm that the oil level in the hydraulic oil tank is at the appropriate position.

Attachment Operation Guide.

This section outlines the precautions that must be followed when operating the hydraulic excavator equipped with attachments.

Note: Select the attachments that are most suitable for the main machine. The models of machines that can accommodate attachments may vary. For information regarding the selection of attachments and machine models, please contact your Yuchai dealer.

Hydraulic Breaker

1.User Guide for the Hydraulic Breaker

The hydraulic breaker is the most commonly used work attachment. It is extensively utilized for various tasks, including the demolition of buildings, breaking of road surfaces, tunnel operations, breaking of steel slag, rocks, and in quarrying activities.

1)When conducting breaking operations, please ensure that the direction of the breaker rod's tip is perpendicular to the surface of the material being broken, and maintain this position as much as possible. If the surface of the material is inclined, the rod may slide off the surface, which could result in damage to the rod and adversely affect the operation of the hydraulic system. When breaking, please select an appropriate impact point and ensure that the chisel is securely fastened before proceeding with the impact.

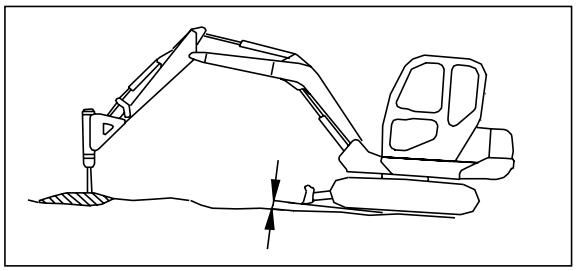

It is essential to continuously adjust the bucket oil cylinder during operation to maintain the alignment of the chisel's penetration direction with that of the breaker body.

2)When applying impact, press the chisel against the impact surface, raising the chassis approximately 5 cm off the ground; do not allow the machine to lift excessively off the ground.

3)When applying continuous impacts to the same striking surface, if the chisel rod fails to penetrate or break the surface within one minute, change the impact location and perform the breaking near the edge.

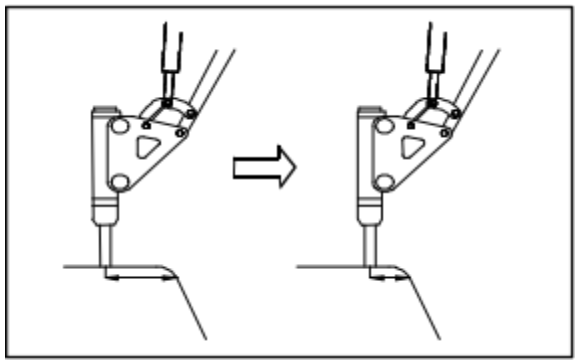

4) Ensure that the chisel rod consistently strikes the appropriate surface to prevent the use of impact force when there is no resistance.
When the rock or target has been shattered, please immediately stop the striking action of the breaker. Continuing aimless strikes will only cause loosening and damage to the front body and main bolts and may even damage the excavator itself.

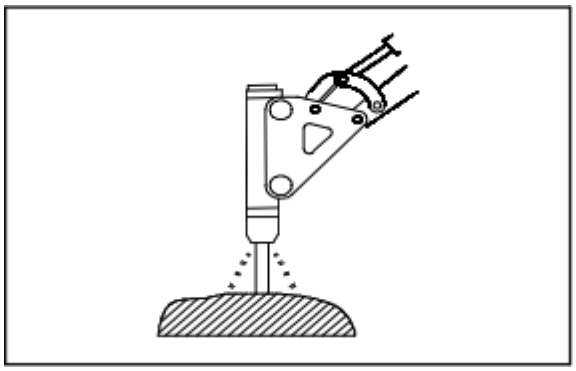

In a state of aimless striking, apart from improper insertion, the shaking of the breaker during use will also have an impact.

2. Prohibitions for Operating the Hydraulic Breaker.

To ensure the machine has a long service life and to guarantee safe operation, do not operate the machine in any of the following manners:

Note: Do not operate all oil cylinders to the end of their stroke; always maintain a clearance of approximately 5 cm.

1) Using the breaker to push heavy objects or large stones.

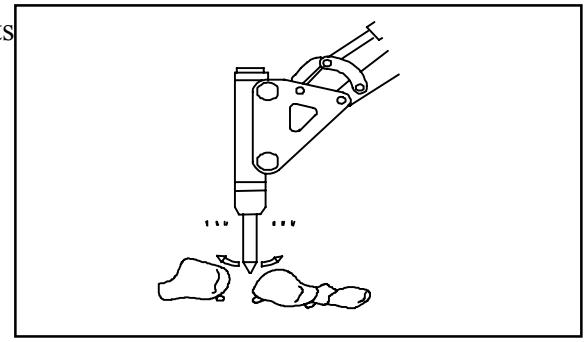

2) Operate using rotational force.

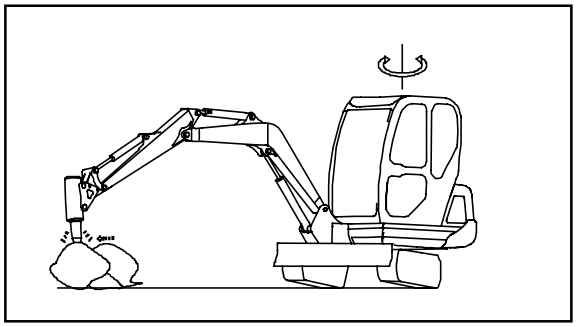

3) Move the drill rod during impact operations.

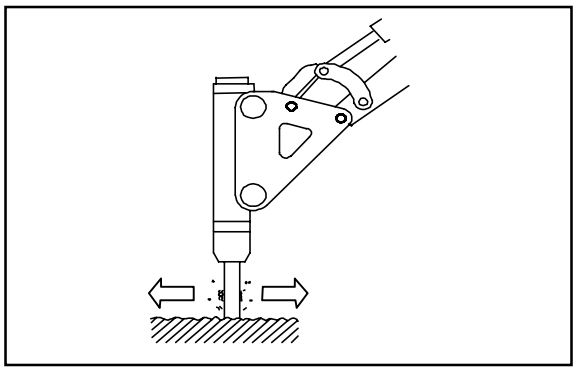

4) Apply impact force either horizontally or upwards.

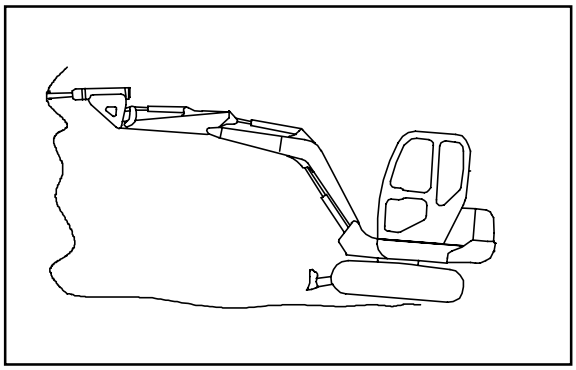

5) Swing the breaker when penetrating the rock.

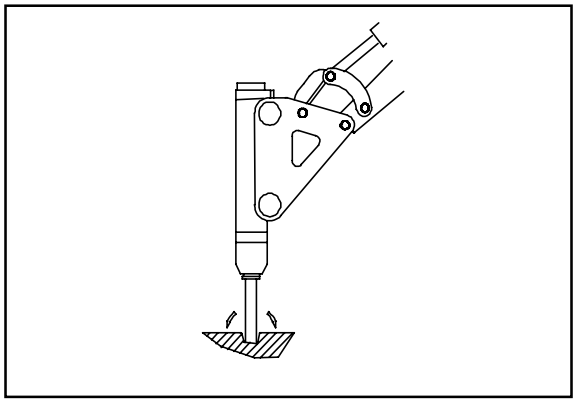

6) Chipping operation.

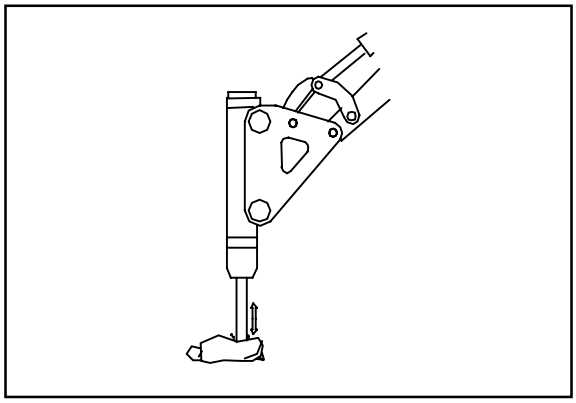

7) Conduct breaking operations in water or muddy ground.

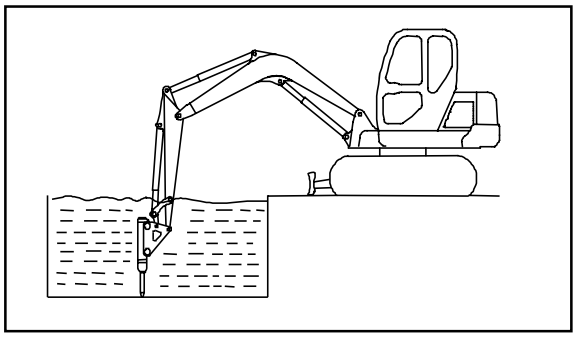

8) Utilize the breaker as a tool for lifting heavy objects.

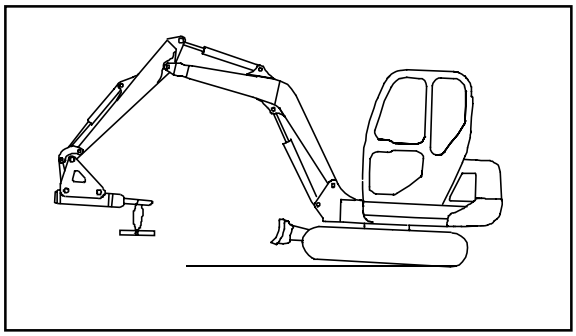

9) Fully extend the bucket oil cylinder to lift the machine off the ground.

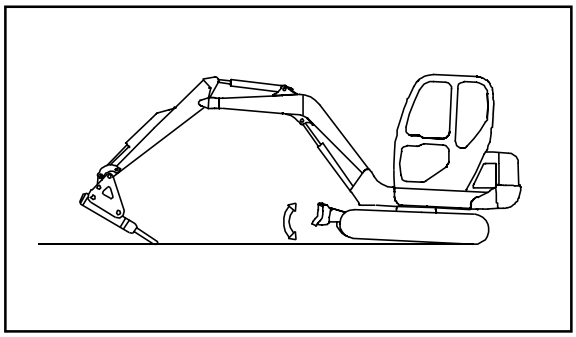

Quick Coupler

1. Installation of the bucket.

1) Use a pry bar to lift item ①.

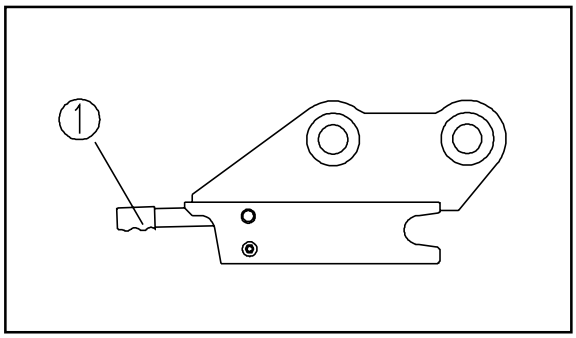

2) Insert the bucket pin into positions ② and ③, then lower the pry bar to complete the bucket installation.

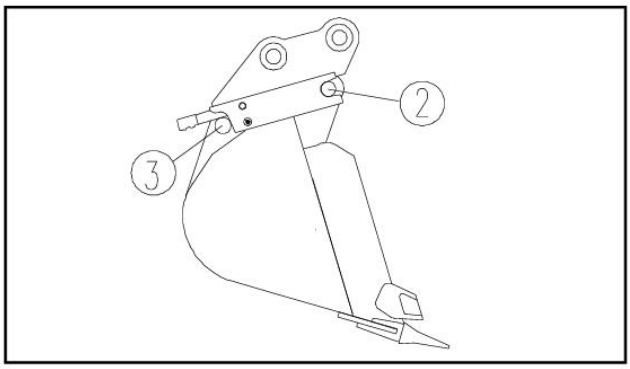

2. Removing the Bucket

1) Use a pry bar to lift item ①.

2) Remove the bucket.

Daily Inspection of the Hydraulic Breaker

Conduct daily inspections and maintenance of the hydraulic breaker as outlined in the table.

Number	Inspection or Maintenance Items	Inspection Points	Maintenance Method
1	Inspect for any loose or missing bolts and nuts.	Main bolts and side plate bolts.	Tighten the bolts or reinstall new ones.
2	Inspect the hose components for any loss, damage, or oil leakage.	High-pressure hydraulic pipeline for the broken hammer	Re-tighten any loose parts and replace any severely damaged components.
3	Lubrication 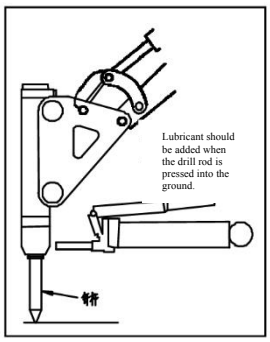	Before operation and after every 2 to 3 hours of continuous operation, it is advisable to apply lubricant. Each lubrication session must involve injecting lubricant 5 to 10 times.	Inject lubricant through the lubrication oil injection hole located on the front body of the breaker.
4	Inspect the capacity and contamination levels of the hydraulic oil.	Condition of the hydraulic oil.	The condition of the hydraulic oil may vary due to different working environments. A simple method to assess the quality change of the oil is to observe any changes in its color. If the oil quality deteriorates significantly, please drain the hydraulic oil from the tank, clean the tank, and refill it with new hydraulic

广西玉柴装备科技有限公司

Guangxi Yuchai Equipment Technology Co., Ltd.

SJ008/U60-AE51

Address:Yuchai Engineering Machinery Industry Center, Luchuan, Yulin, Guangxi， China
Telephone:0086-775-3223503