xylem
Let's Solve Water

hydrovar® X

THE ULTIMATE INTEGRATED MOTOR & DRIVE SOLUTION IN PERFORMANCE, ENERGY EFFICIENCY, CONNECTIVITY AND SIMPLICITY

Distributed in
QLD, NSW, ACT, VIC & TAS by
Brown Brothers Engineers Australia Pty Ltd

Distributed in SA & NT by
WBS PUMPS

Distributed in WA by
APT Water
PUMPING & BEYOND

LOWARA
a xylem brand

hydrovar® X

When connectivity meets simplicity and sustainability.

Xylem is a leading global water technology company committed to solving critical water and infrastructure challenges through innovation.
By providing smart and cutting-edge technology, we are reducing energy consumption to minimum possible levels and increasing sustainability.
There is one thing that Xylem shares with the greatest engineering innovators; that's the continuous investment into new products that is reflected in outstanding solutions.
You can find all these features in hydrovar® X, the answer to innovation, sustainability and user friendliness all-in-one.

hydrovar® X delivers the best in energy efficiency performances with its frequency converter coupled with the ultimate synchronous motor, manufactured by Xylem - integrating decades of expertise and know-how in pumping solutions.

It's the right combination of motors, variable speed drives and pumps ensuring great performance, maximum savings and a rapid return on investment.

e-SV hydrovar® X
Vertical multistage stainless steel pumps

e-SVI hydrovar® X
Immersible multistage pumps

e-HM hydrovar® X
Horizontal multistage pumps

GHV hydrovar® X
Variable speed booster sets

e-LNE hydrovar® X
In-line pumps

e-NSC/e-SH hydrovar® X
End suction pumps

Available soon

Sustainable

hydrovar® X is a green technology solution, providing best-in-class efficiency. Rare earths? No thanks! Xylem accepted the challenge to fight availability and environmental concerns with a smarter technology that provides superior performance with a green heart.

Easy

The built-in application software makes it the easiest drive to commission, program and operate, enabling virtually any configuration of pumps.

Pump solution

Integrated functions provide protection for the pump and motor, and improve the quality of energy from the grid. All of this means excellent energy saving from a compact, easy-to-use solution suited to nearly any application.

We've expanded the impressive list of features to another level:

- Remote control and management via the xylem X app
- Graphic color display
- Preset from factory
- Automated start-up menu
- 30 language sets
- IE5 motor equipped with advanced control for the highest efficiency level and to extend the motor life
- Standard multi-pump capability of up to 8 pumps with no single failure point
- More features are to come, and via the app the user will always get the latest and most updated version

The right solution for you

hydrovar X® is simple to use yet sophisticated and robust, embracing the most common through to the most demanding applications.
The **hydrovar® X+** option makes it easy to fulfil even the most complex applications.

	hydrovar® X+
DISPLAY	Graphic color display
CONTROLS	
pressure	●
flow	●
temperature	●
level	●
MULTI-PUMP	up to 8 pumps
ENCLOSURE	
IP55/NEMA 4	●
working temperature -20/+50°C	●
COMMUNICATION PROTOCOLS	
Modbus RTU	●
BACnet MS/TP	●
FEATURES	
IE5 synchronous motor	●
standard set of I/Os	●
extended I/Os	●
FUNCTIONALITY	
linear proportional pressure	●
MOBILE APP	
wireless communication	●

Discover hydrovar® X.

Easy to commission, with a full set of languages.

Mobile app for smartphone.

You're in control with a backlit graphic color display or seven segment display, within an IP55 cover. Three visual LED options for immediate unit status, with a keypad to navigate and quickly set up your unit.

Wiring chamber for a quick access to terminals.

Full set of I/Os to fullfil even the most demanding application

Modbus and BACnet as standard.

Advanced system control for pump applications, pre-programmed from the factory, with build-in multipump system control up to 8 units.

Protection cover for electronic parts, for a safer installation.

The most compact motor design ever, entirely designed and built by Xylem for our pump solutions: the perfect match of precision and performance.

Assisted reluctance best-in-class efficiency motor.

Multiple cable glands available for easy access.

SOLUTIONS	BENEFITS
Motor with embedded variable speed drive	Optimized motor & drive footprint Increased robustness and operation window, down to -20°C Maximum integration enabling dynamic control at the optimal duty point anytime
Smart device	Onboard IoT for user-friendly installation & operation Extensive monitoring connectivity capabilities Minimized inventory due to flexible spare sparts management
Vast expertise in pump & motor manufacturing	Dedicated solution for pump applications

Don’t hold back your imagination.

With the graphical color display you can quickly set-up and navigate the menu of your unit: check all the parameters and choose the perfect unit configuration to fit your installation. No time to do it? Genie will start up and run the unit for you!

xylem X, mobile App for smartphones available soon.

xylem vue

Digital transformation starts with Xylem Vue

Digital adoption is no longer an option; it's an urgent reality to meet the increasing pressures you face. hydrovar® X is an important part of our full suite of digital solutions, Xylem Vue, that combines smart and connected technologies, intelligent systems and services, and 100+ years of problem solving expertise. Xylem Vue helps solve your most pressing water challenges and deliver transformative outcomes for your communities – faster and more affordably. Let's see what's possible for you, and let's do it together.

For more information on Xylem Vue, go to xylem.com/XylemVue

Set up the unit with the color display or with the app on your mobile phone. ***Stay connected!***

Check your systems from wherever.

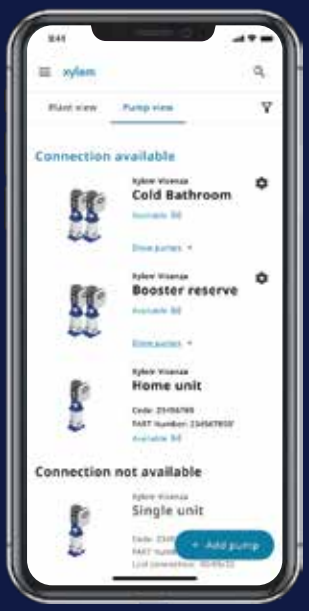

Dimensions

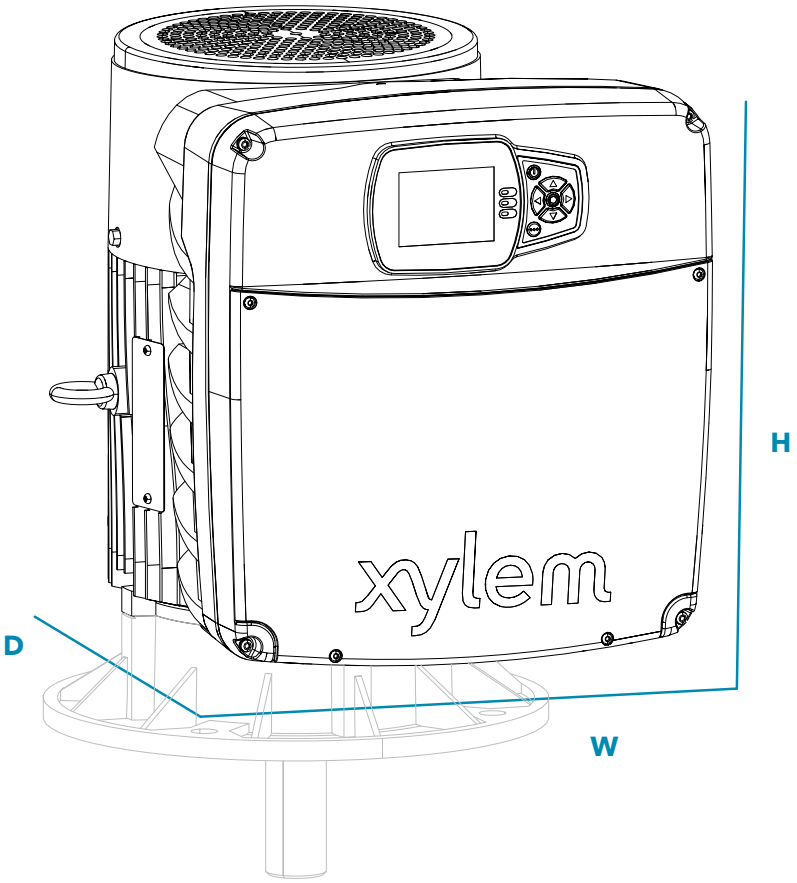

Motor power in kW	H (mm)	W (mm)	D (mm)
3 - 5.5	289	256	284
5.5 - 11	329	302	351
11 - 22	400	362	442

Electromagnetic compatibility (EMC). hydrovar® X complies with the product standard EN6180-3:2004 + A1:2012 part 1, which also refers to applications in domestic structures and buildings/ infrastructures.

Extended working performances

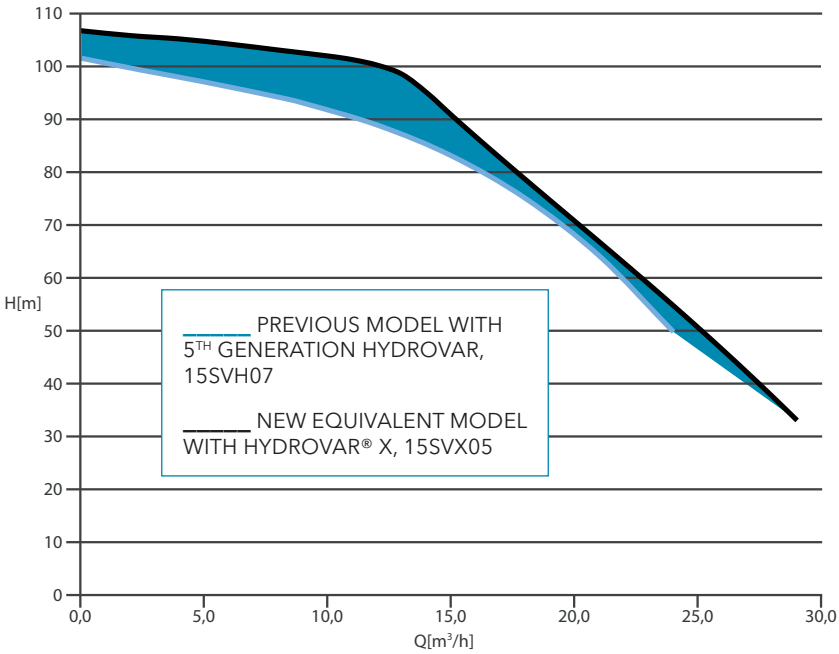

hydrovar® X curve vs traditional 50Hz curve

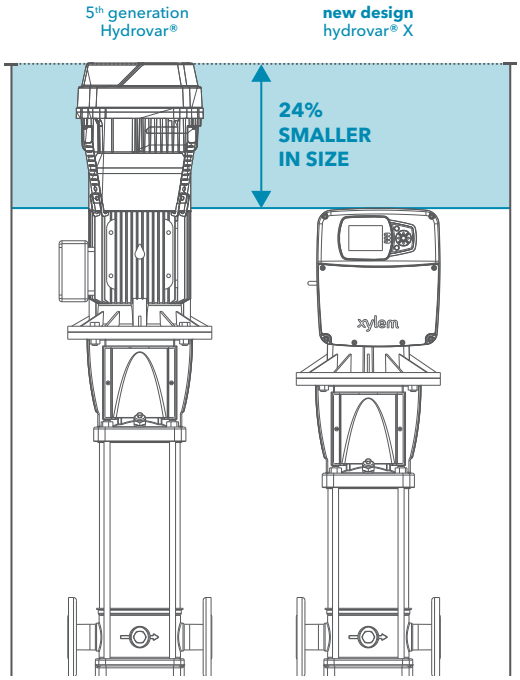

hydrovar® X OFFERS HIGHER PERFORMANCE WITH A REDUCED FOOTPRINT EVEN COMPARED TO THE LEGACY 5TH GENERATION HYDROVAR SOLUTION.

Technical features

hydrovar® X+

INPUTS AND OUTPUTS

Analog inputs	4
Analog input configuration	0-20mA / 4-20mA / 0-10V / 2-10V
Digital inputs	5
Analog output	1
Analog output configuration	0-20mA / 4-20mA / 0-10V / 2-10V
Relay output (Form C)	2
10 V supply	1

COMMUNICATION

RS485 port	2
Modbus RTU	yes
BACnet MS/TP	yes
Multipump internal protocol	yes
Wireless for smartphone app	yes

EMC category C2 according to EN 61800-3

Electromagnetic Compatibility (EMC). hydrovar® X complies with the product standard EN6180-3:2004 + A1: 2012 part 1 which also refers to applications in domestic structures and buildings/infrastructures

Leakage current	<3.5 mA

The leakage currents are measured in accordance with EN 61800-5-1

THD

hydrovar® X complies with the product standard EN61000-3-2 for single-phase models and with EN61000-3-12 for three-phase models.

MAIN CONNECTORS

Voltage and power	3x200-240V 3x380-480V
Voltage tolerance	+-10%
Motor efficiency	IE5
Network	ye TN/TT (IT with optional motor) according to IEC 60364

ENVIRONMENT

Degree protection	IP55/NEMA 4
Operating temperature	-20/+50°C without derating
Storage temperature	-40/70°C
Altitudine	0-1000m without derating
Humidity	max 95% with no condensation

e-SV

The e-SV fabricated stainless steel vertical multistage pump is an energy saving, non-priming pump built to withstand a variety of mechanically aggressive and high temperature liquids, and is designed to extend uptime and help reduce lifecycle costs in a wide range of demanding applications.

The e-SV pump is one of the highest efficiency multistage pumps on the market today.
It features 11 different sizes from 1 to 125 m^3/h, and each can be specially configured for a wide range of environments. This fabricated vertical multistage pump is also easy to install and economical to maintain. When it comes to efficiency, the e-SV delivers.

e-SV multistage pumps have a history of performance handling water and liquids such as glycol, oils/solvents, and more in the in the industrial, municipal, commercial building services and agricultural markets.

Take the efficiency and low lifetime costs of e-SV multistage pumps to new levels with hydrovar® X – first-class pump management that optimises connectivity, sustainability and performance.

Specifications

Flow rate: up to 160 m^3/h

Head: up to 260 m

Temperature of pumped liquid: up to +120°C

Maximum operating pressure 16, 25 or 40 bar (PN16, PN25 or PN40)

The hydraulic performances meet the tolerances specified in ISO 9906:2012

Environment temperature: -20° C to +50° C with no performance derating

Performance Curve

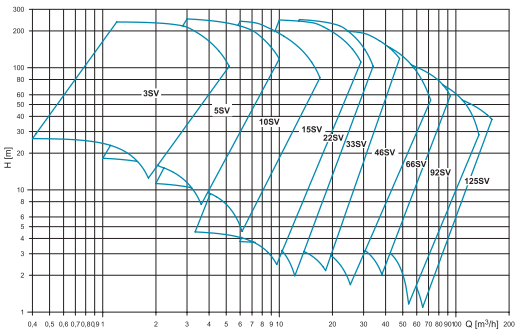

e-SVI

The e-SVI is an efficient, reliable, high-performance pump specially designed to be mounted on the top of a tank, with the pump unit immersed in the liquid to be pumped. Designed with flexibility and reliability in mind, e-SVI is an industry-leading range, with flows up to 120 m³/h and sizes from 1 to 92, and is is an effective solution to many needs in a wide variety of applications in the industrial, OEM and commercial building services markets. The e-SVI can be built with a variable number of stages to cover a wide range of duty points. It's configured to allow an additional number of blank stages, so that the height of the immersed part can accommodate different suction depths. It can serve as an interchangeable drop-in replacement for pumps with 3/4", 1"1/4 or 2" Rp threaded fittings, and for larger sizes a DN80 flanged discharge connection is standard. The e-SVI pump is available in a wide assortment of mechanical seals designed to handle high temperatures, high pressures and aggressive liquids with ease. Durable materials prevent downtime and prolong the life of the seal.

Industrial applications that demand the reliability of e-SVI multistage pumps are taken to new levels with hydrovar® X – with intelligent pump management and connectivity that offers maximum uptime and precision performance.

Specifications

Flow rate: up to 135 m³/h

Head: up to 260 m

Temperature of pumped liquid: up to +120°C

Maximum operating pressure 25 bar (PN 25)

The hydraulic performances meet the tolerances specified in ISO 9906:2012

Environment temperature: -20° C to +50° C with no performance derating

Performance Curve

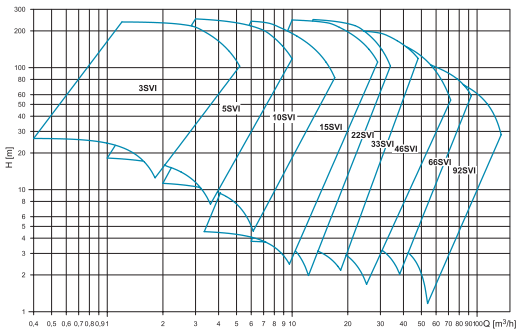

e-HM

e-HM series is a versatile line of horizontal multistage pumps designed for best-in-class efficiency and superior durability to slash the total cost of ownership. Customizable options mean you get exactly the right pump for your application, exactly when you need it.
The e-HM pump is available in 6 different sizes form 1 to 22 m³/h to cover a large requirement in flow rate with maximum efficiency. Whether operating in building services, industrial or residential applications, the e-HM is designed to meet your water needs.

e-HM series is designed to handle water, free of suspended solids, in the civil, industrial and agricultural sectors. Its versatile field of application include pressure boosting and water supply systems, industrial washing and cleaning, circulation of hot and cold liquids for heating, cooling and conditioning systems, water treatment, food and beverage, and HVAC.

Enhance the reliability and energy-saving performance of e-HM horizontal multistage pumps with hydrovar® X – first-class pump management that optimises efficiency, connectivity and sustainability.

Specifications

Flow rate: up to 34 m³/h

Head: up to 160 m

Maximum operating pressure 16 bar (PN 16)

Environment temperature: -20°C to +50°C with no performance derating

Temperature of pumped liquid: up to +120°C

The hydraulic performances meet the tolerances specified in ISO 9906:2012

Performance Curve

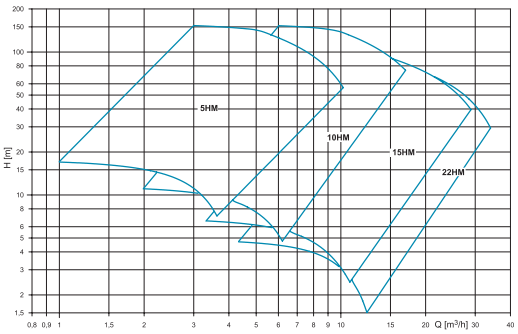

GHV

The Lowara GHV series booster sets are fully automatic booster sets for water supply, water pressure increase and water transfer in condominiums, office buildings, hotels, public buildings, industries and other applications.

The GHV series is equipped with 1 to 8 vertical multistage e-SV pumps, each fitted with a Hydrovar variable frequency drive independently controlled for the maximum reliability. Thanks to its unique compact design version, the GHV series makes installation possible even in tight spaces. The GHV series is easy to program, designed for maximum energy efficiency and can communicate with a BMS system via Modbus or BACnet.

The GHV series is certified for use with potable water.

GHV booster sets are available with other pump series and with other options on request.

Reach a new level of performance, sustainability and connectivity with GHV with hydrovar® X – compact, reliable, all-in-one booster sets with intelligent pump management.

Specifications

Flow rate: up to 1280 m^3/h

Head: up to 160 m

Temperature of pumped liquid: up to +65°C

Maximum operating pressure 16 bar (PN 16)

The hydraulic performances meet the tolerances specified in ISO 9906:2012

Performance Curve

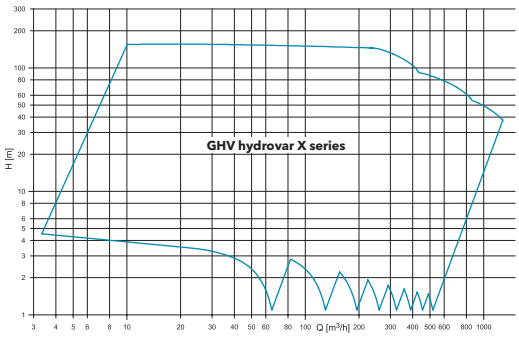

Xylem |ˈzīləm|

1) The tissue in plants that brings water upward from the roots;
2) a leading global water technology company.

We're a global team unified in a common purpose: creating advanced technology solutions to the world's water challenges. Developing new technologies that will improve the way water is used, conserved, and re-used in the future is central to our work. Our products and services move, treat, analyze, monitor and return water to the environment, in public utility, industrial, residential and commercial building services settings. Xylem also provides a leading portfolio of smart metering, network technologies and advanced analytics solutions for water, electric and gas utilities. In more than 150 countries, we have strong, long-standing relationships with customers who know us for our powerful combination of leading product brands and applications expertise with a strong focus on developing comprehensive, sustainable solutions.

For more information on how Xylem can help you, go to www.xylem.com

xylem
Let's Solve Water

Xylem reserves the right to make modification without prior notice.
Lowara, Xylem and hydrovar are trademarks of Xylem Inc. or one of its subsidiaries.
© 2023 Xylem, Inc. - 05/23 - UK Hydrovar X, Sales Lit - UKLIT0259

Distributed in
QLD, NSW, ACT, VIC & TAS by

Brown Brothers Engineers Australia Pty Ltd

Distributed in SA & NT by

WBS PUMPS

Distributed in WA by

APT Water
PUMPING & BEYOND