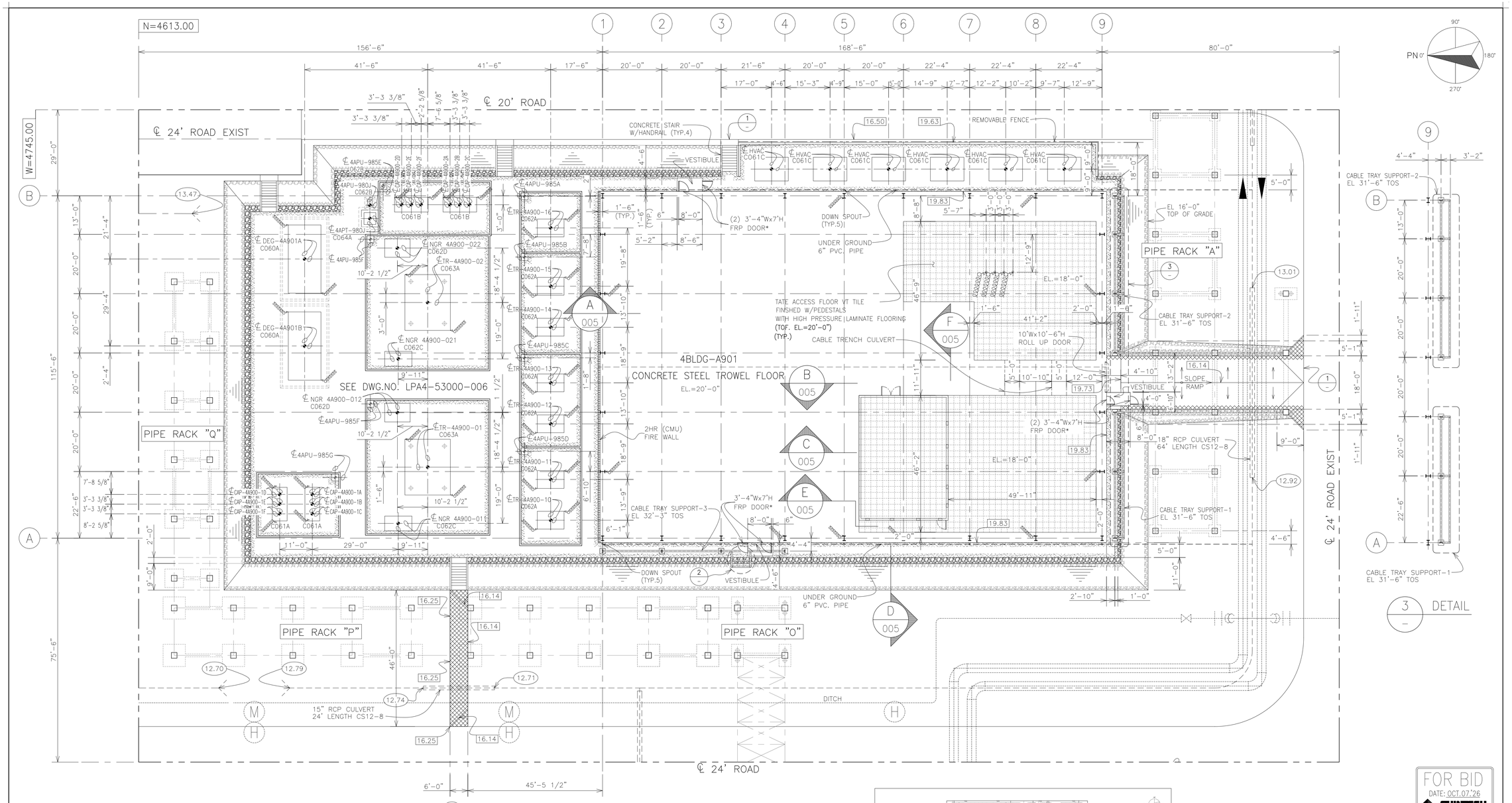

1ST FLOOR PLAN (EL.=VARIES)

NOTE :

1. ※ MARK DIMENSION ARE ONLY REFERENCE. THE DIMENSION SHOULD BE DETERMINED BY CONTRACTOR.
2. ✳ MARKED DOOR SHALL HAVE PANIC BAR.

LEGEND :

- INDICATES LIMIT OF ANTI-ACID
- INDICATES LIMIT OF CONC. PAVING W/#4@12" EA.WAY
- INDICATES LIMIT OF CONC. PAVING
- INDICATES #3 LIMESTONE & FABRIC UNDER STONE
- INDICATES LIMIT OF LIMESTONE PAVING
- 6.0 INDICATES FINISH ELEVATION
- (6.0) INDICATES FLOW ELEVATION
- INDICATES DIRECTION OF DRAIN
- INDICATES GROUNDING PIGTAIL

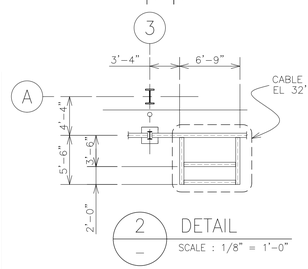

2 — DETAIL
SCALE : 1/8" = 1'-0"

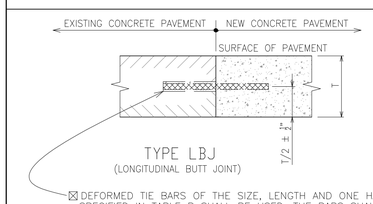

TYPE LBJ
(LONGITUDINAL BUTT JOINT)

☒ DEFORMED TIE BARS OF THE SIZE, LENGTH AND ONE HALF THE SPACING SPECIFIED IN TABLE B SHALL BE USED. THE BARS SHALL BE INSTALLED IN EXISTING PAVEMENT BY DRILLING HOLES LARGER THAN THE BAR DIAMETER (⅛" WHEN EPOXY IS USED. ½" WHEN A CEMENTITIOUS GROUT ANCHOR SYSTEM IS USED, AND IN ACCORDANCE WITH MANUFACTURE'S RECOMMENDATIONS WHEN ADHESIVE ANCHOR SYSTEMS ARE USED) TO A REQUIRED DEPTH OF HALF OF THE BAR LENGTH. THE HOLES SHALL BE DRILLED AND FILLED BEFORE INSERTION OF THE TIE BARS.

1 — TYPICAL DETAIL OF LONGITUNAL BUTT JOINT

REFERENCE DRAWINGS

DWG. NO.	DESCRIPTION
LPA4-33000-002	ROOF PLAN
LPA4-33000-003	NORTH & SOUTH ELEVATION
LPA4-33000-004	EAST & WAST ELEVATION
LPA4-33000-005	SECTION
LPA4-53000-005~007	FOUNDATION ARRANGEMENT PLAN (5)~(7)

THIS DWG.

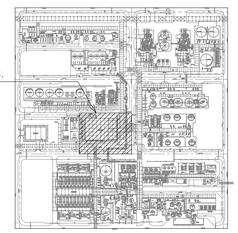

KEY PLAN

REV.NO.	DESCRIPTION	DRAWN	CHECKED	DATE
0/C	FOR PE APPROVAL	P.S		10/01/26
0/B	FOR PE APPROVAL	(ORIGINAL SIGNED)		09/29/26
0/A	FOR REVIEW	(ORIGINAL SIGNED)		09/24/26

FOR BID
DATE: OCT.07'26
SHINTECH

JOB NO. EA-503
BUILDING WORK FOR CA4

SHINTECH PLAQUEMINE CA PLANT-4

300/800 AREA

4BLDG-A901

GENERAL PLAN

SHINTECH

APPROVED BY	KOYAMA	DATE	SEP. 24. 26
CHECKED BY	IZUMI	SCALE	1/16" =1'-0"
DRAWN BY	TTCL	DWG. No.	LPA4-33000-001 /0

CONFIDENTIAL : SHINTECH, ALL RIGHTS RESERVED. THE DRAWINGS, SPECIFICATIONS AND INFORMATIONS ARE THE PROPERTY OF SHINTECH, AND CONFIDENTIAL.

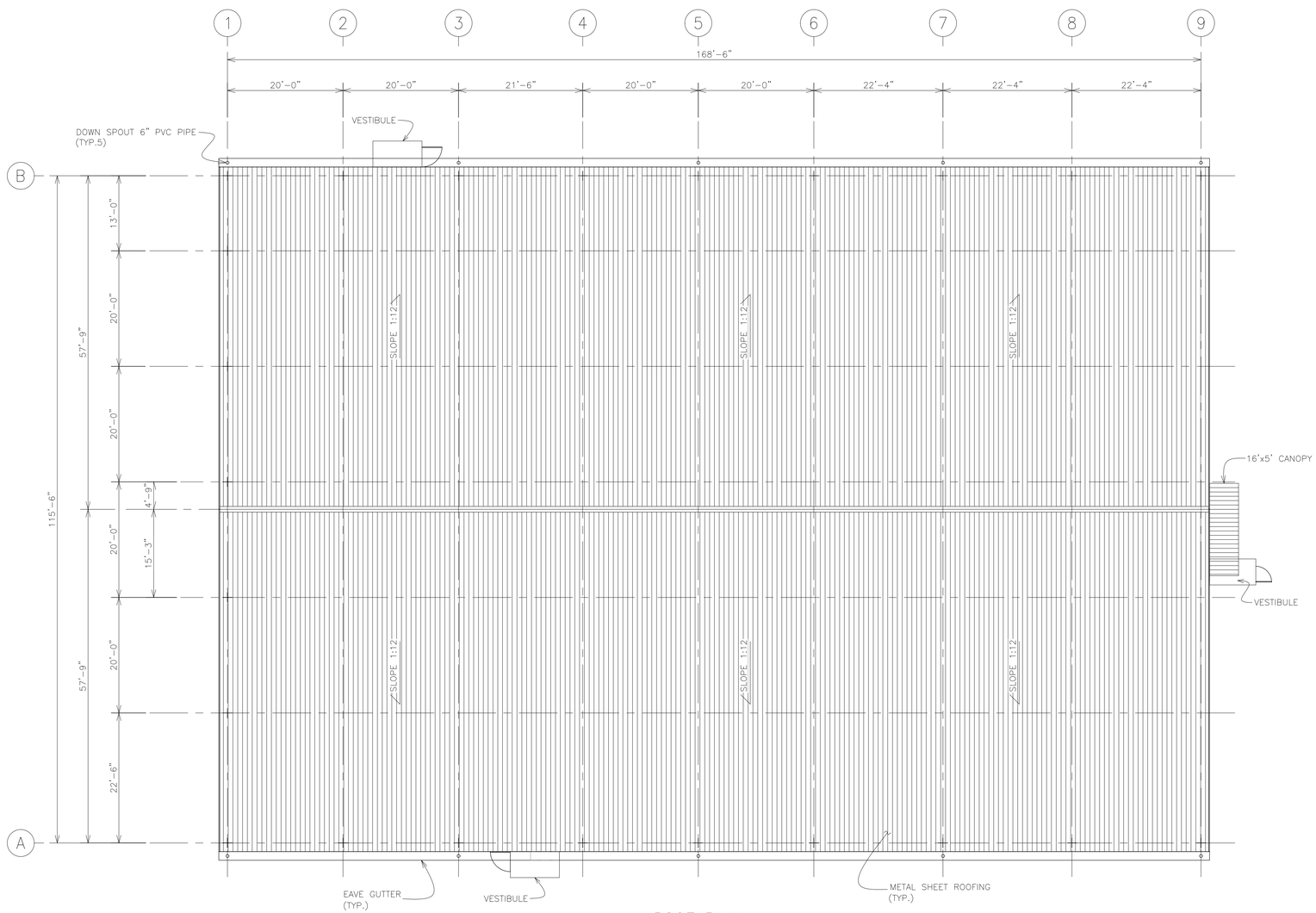

ROOF PLAN

REFERENCE DRAWINGS

DWG. NO.	DESCRIPTION
LPA4-33000-001	GENERAL PLAN

REV.	DESCRIPTION	DWN	CHKD	A/E	CHIEF	MGR.	APPR.	DATE
0/C	FOR PE APPROVAL	P.S						10/01/26
0/B	FOR PE APPROVAL							(ORIGINAL SIGNED) 09/29/26
0/A	FOR REVIEW							(ORIGINAL SIGNED) 09/24/26

FOR BID
DATE: OCT.07'26
SHINTECH

JOB NO. EA-503
BUILDING WORK FOR CA4

REV.NO.	DESCRIPTION	DRAWN	CHECKED	DATE
△				. .
△				. .
△				. .
△				. .
△				. .

SHINTECH PLAQUEMINE CA PLANT-4

300/800 AREA

4BLDG-A901

ROOF PLAN

SHINTECH

APPROVED BY	KOYAMA	DATE	SEP. 24. 26
CHECKED BY	IZUMI	SCALE	3/32" =1'-0"
DRAWN BY	TTCL	DWG. No.	LPA4-33000-002 △0

CONFIDENTIAL : SHINTECH, ALL RIGHTS RESERVED. THE DRAWINGS, SPECIFICATIONS AND INFORMATIONS ARE THE PROPERTY OF SHINTECH, AND CONFIDENTIAL.

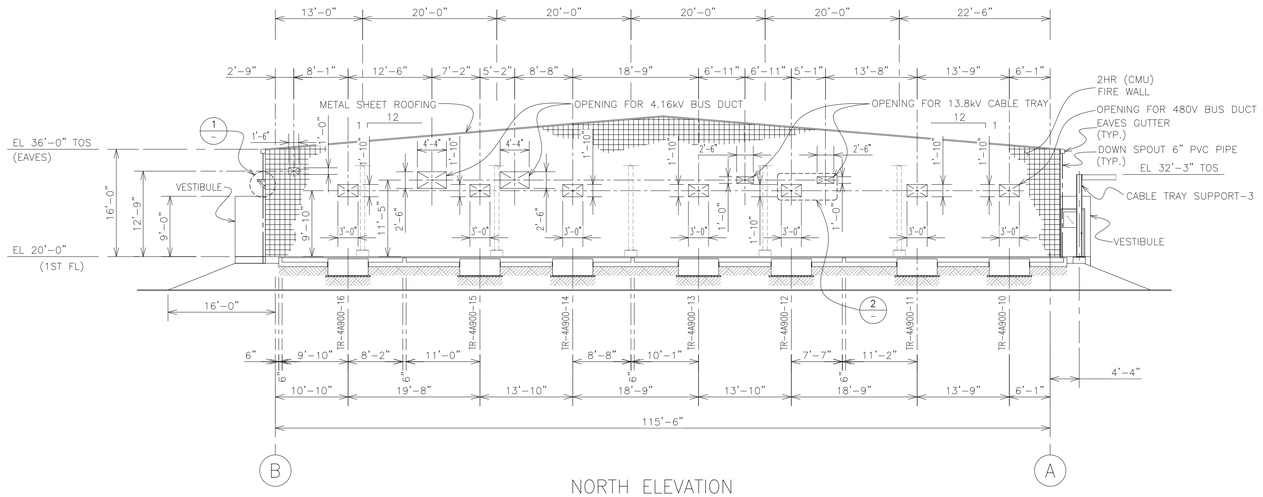

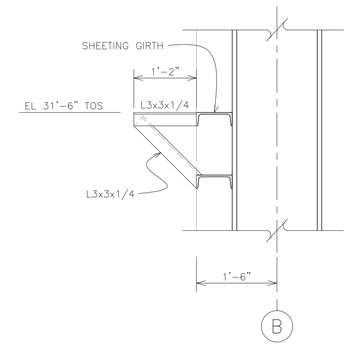

1 / — PIPING SUPPORT DETAIL

SCALE : 3/4" = 1'-0"

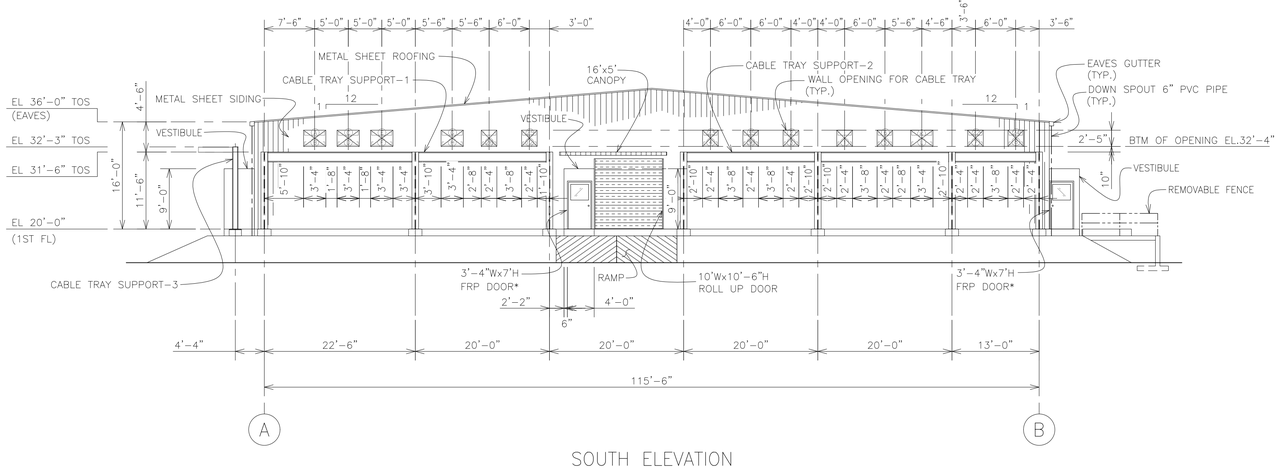

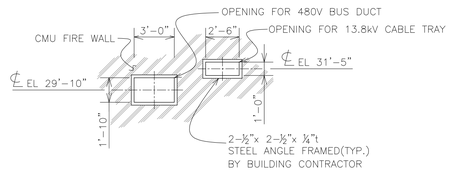

2 / — TYPICAL OPENING DETAIL FOR CMU FIRE WALL

SCALE : 3/16" = 1'-0"

REFERENCE DRAWINGS

DWG. NO.	DESCRIPTION
LPA4-33000-001	GENERAL PLAN

LEGEND :

ⓧ : NUMBER LOAD OF CABLE TRAY

NOTE :

1. TOTAL LOAD OF CABLE TRAY ON SUPPORT-1 IS APPROX. 8,500 LBS.
2. TOTAL LOAD OF CABLE TRAY ON SUPPORT-2 IS APPROX. 11,000 LBS.

REV.NO.	DESCRIPTION	DRAWN	CHECKED	DATE
0C	FOR PE APPROVAL	P.S	[illegible]	10/01/26
0B	FOR PE APPROVAL	(ORIGINAL SIGNED)		09/29/26
0A	FOR REVIEW	(ORIGINAL SIGNED)		09/24/26

FOR BID
DATE: OCT.07'26
SHINTECH

JOB NO. EA-503
BUILDING WORK FOR CA4

SHINTECH PLAQUEMINE CA PLANT-4

300/800 AREA

4BLDG-A901

NORTH & SOUTH ELEVATION

SHINTECH

APPROVED BY	KOYAMA	DATE	SEP. 24, 26	SCALE	3/32" =1'-0"
CHECKED BY	IZUMI				
DRAWN BY	TTCL	DWG. No.	LPA4-33000-003		0

CONFIDENTIAL : SHINTECH, ALL RIGHTS RESERVED. THE DRAWINGS, SPECIFICATIONS AND INFORMATIONS ARE THE PROPERTY OF SHINTECH, AND CONFIDENTIAL.

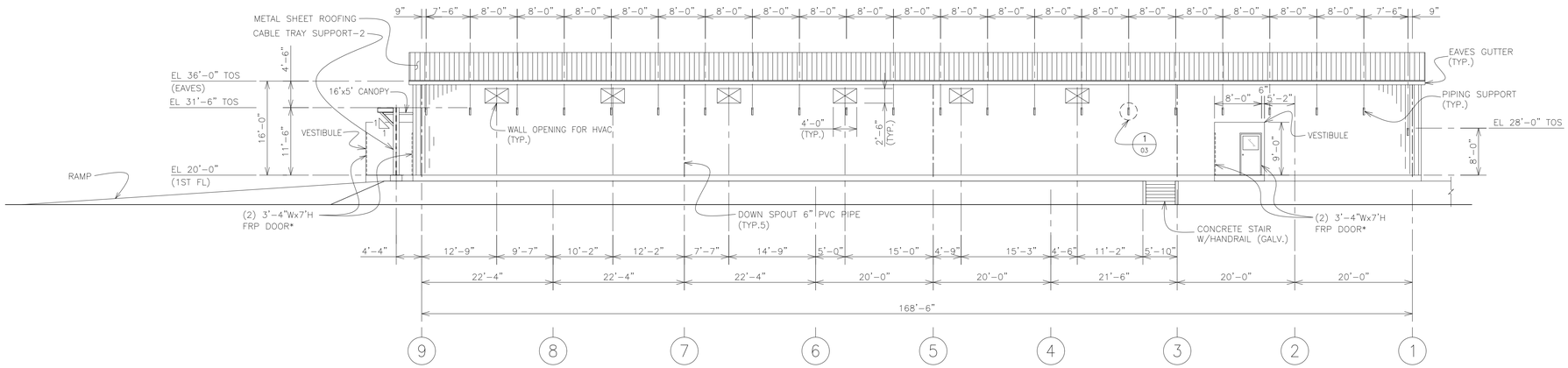

EAST ELEVATION

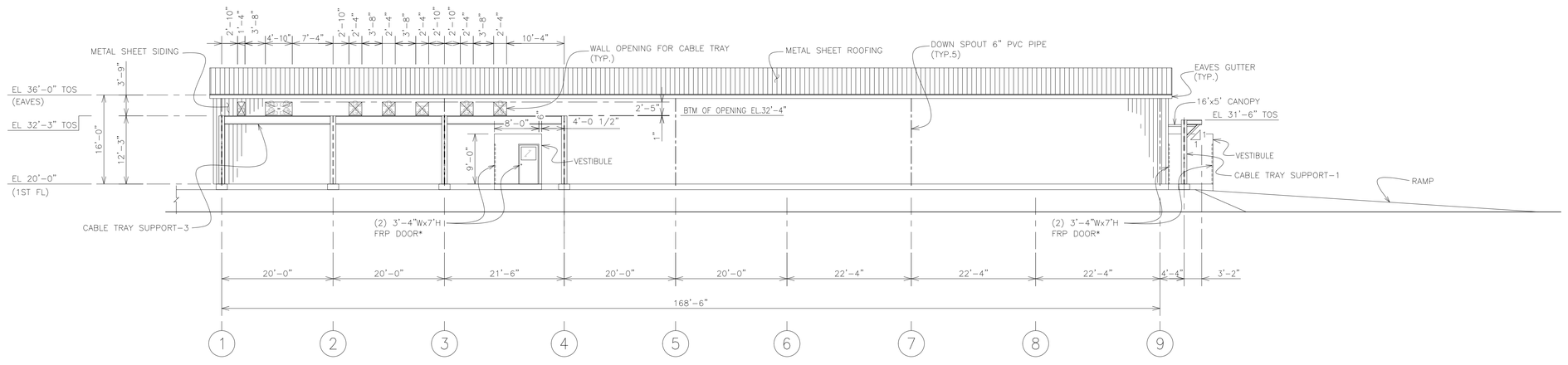

WEST ELEVATION

REFERENCE DRAWINGS

DWG. NO.	DESCRIPTION
LPA4-33000-001	GENERAL PLAN
LPA4-33000-003	NORTH & SOUTH ELEVATION

LEGEND :

(X) : NUMBER LOAD OF CABLE TRAY

NOTE :

1. TOTAL LOAD OF CABLE TRAY ON SUPPORT-3 IS APPROX. 11,000 LBS.
2. OPENING FOR HVAC IS TO BE DESIGNED BY BUILDING CONTRACTOR.

REV.NO.	DESCRIPTION	DRAWN	CHECKED	DATE
0				. .
0				. .
0				. .
0				. .
0				. .

FOR BID
DATE: OCT.07.'26
SHINTECH

JOB NO. EA-503
BUILDING WORK FOR CA4

REV.	DESCRIPTION	DWN	CHKD	A/E	CHIEF	MGR.	APPR.	DATE
0 C	FOR PE APPROVAL	P.S	[illegible]	[illegible]	[illegible]	[illegible]	[illegible]	10/01/26
0 B	FOR PE APPROVAL	(ORIGINAL SIGNED)						09/29/26
0 A	FOR REVIEW	(ORIGINAL SIGNED)						09/24/26

SHINTECH PLAQUEMINE CA PLANT-4

300/800 AREA

4BLDG-A901

EAST & WEST ELEVATION

SHINTECH

APPROVED BY	KOYAMA	DATE	SEP. 24. 26
CHECKED BY	IZUMI	SCALE	3/32" =1'-0"
DRAWN BY	TTCL	DWG. No.	LPA4-33000-004 0

CONFIDENTIAL : SHINTECH, ALL RIGHTS RESERVED. THE DRAWINGS, SPECIFICATIONS AND INFORMATIONS ARE THE PROPERTY OF SHINTECH, AND CONFIDENTIAL.

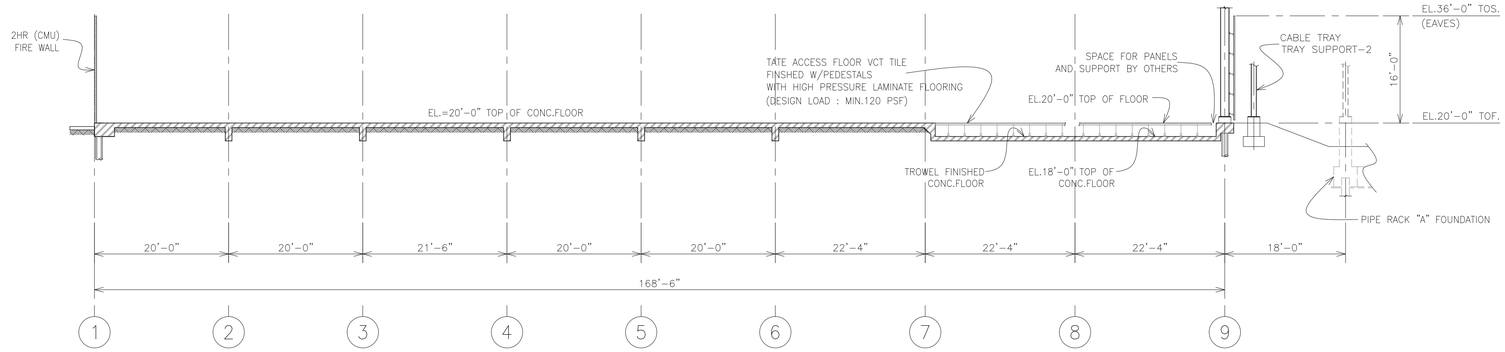

A SECTION 001

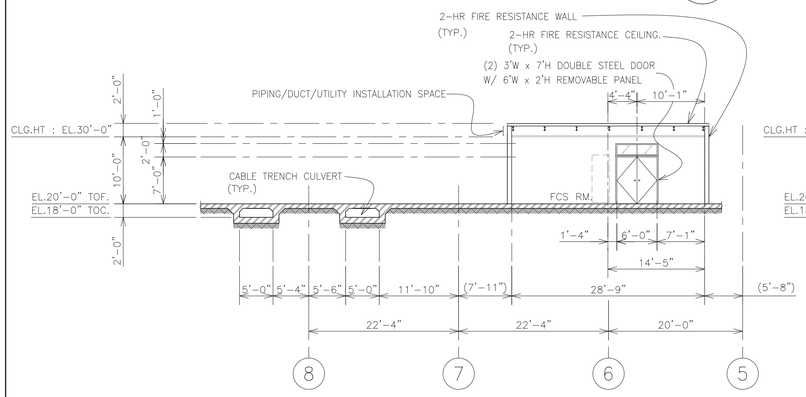

B SECTION 001

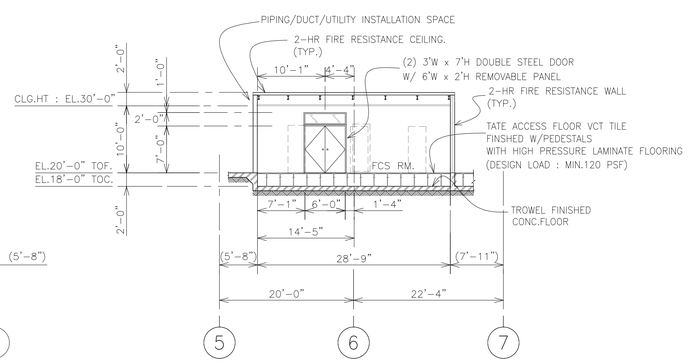

C SECTION 001

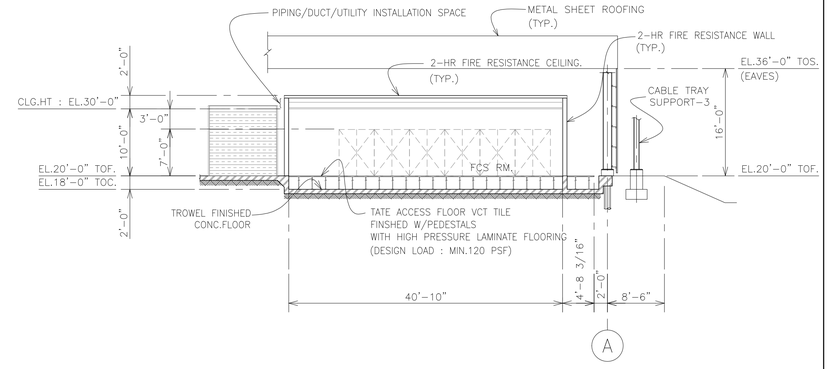

D SECTION 001

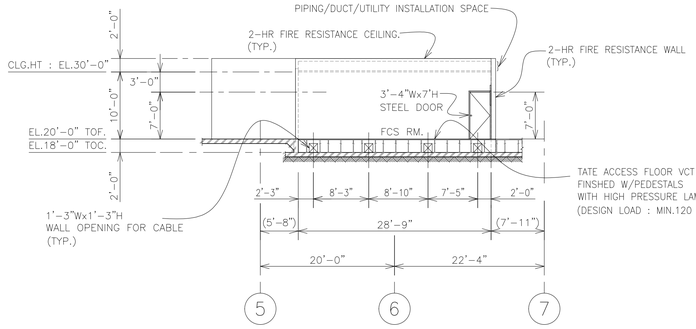

E SECTION 001

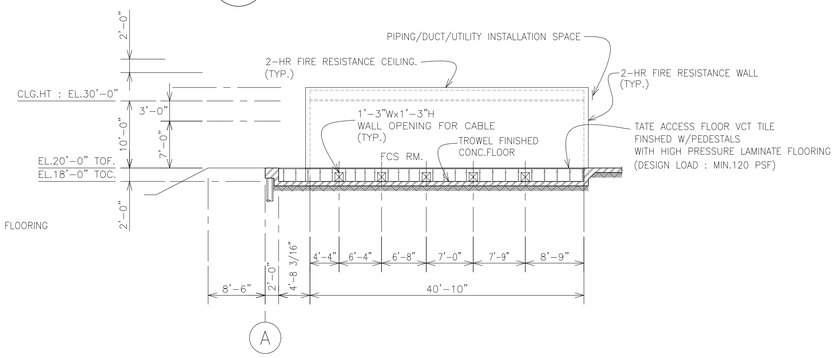

F SECTION 001

ROOM FINISH SCHEDULE

ROOM TITLE	FLOORING					WALLS				CEILING				
	EXPOSED CONC.	PAINTED CONC.	VINYL TILE	ACCESS FLOOR*1	CERAMIC TILE	C.M.B. (PAINTED)*2	C.M.U'S(PAINTED)*3	EXPOSED STRUCT.	FIRE WALL(PAINTED)	EXPOSED STRUCT.	2'x4' GRID LAY-IN ACOUSTIC TILE	6" BATT INSULATION		
	1	2	3	4	5	1	2	3	4	1	2	3		
SWITCHGEAR RM.		2		4			2	3	4	1				VARIES
FCS RM.				4			2	3	4	1				VARIES

NOTE :

1. CEILING SHALL HAVE ENOUGH STRENGTH TO HOLD THE WEIGHT OF (3) WORKERS. DESIGN LOAD IS TO BE DETERMINED BY BUILDING CONTRACTOR.

REFERENCE DRAWINGS

DWG. NO.	DESCRIPTION
LPA4-33000-001	GENERAL PLAN

REV.NO.	DESCRIPTION	DRAWN	CHECKED	DATE
△				. .
△				. .
△				. .
△				. .
△				. .

FOR BID
DATE: OCT.07,'26
SHINTECH

JOB NO. EA-503
BUILDING WORK FOR CA4

REV.	DESCRIPTION	DWN	CHKD	A/E	CHIEF	MGR.	APPR.	DATE
0C	FOR PE APPROVAL	P.S						10/01/26
0B	FOR PE APPROVAL	(ORIGINAL SIGNED)						09/29/26
0A	FOR REVIEW	(ORIGINAL SIGNED)						09/24/26

SHINTECH PLAQUEMINE CA PLANT-4

300/800 AREA

4BLDG-A901

SECTION

SHINTECH

APPROVED BY	KOYAMA
CHECKED BY	IZUMI
DRAWN BY	TTCL

DATE	SEP. 24,'26	SCALE	1/16" =1'-0"
DWG. No.	LPA4-33000-005		0

CONFIDENTIAL : SHINTECH, ALL RIGHTS RESERVED. THE DRAWINGS, SPECIFICATIONS AND INFORMATIONS ARE THE PROPERTY OF SHINTECH, AND CONFIDENTIAL.

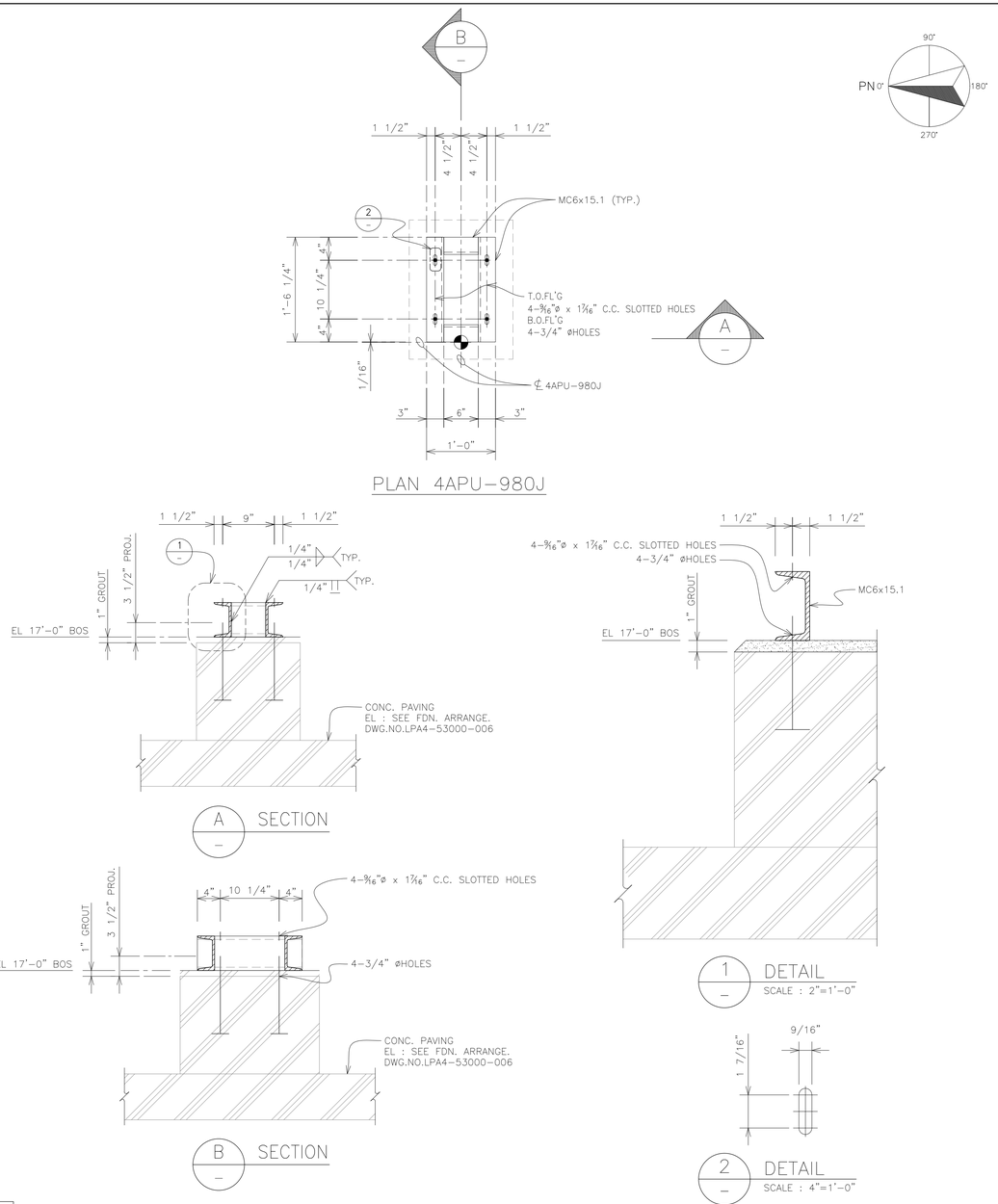

S010A NO.REQ'D : 1 SET

REFERENCE DRAWINGS

DWG. NO.	DESCRIPTION
LPA4-53000-006	FOUNDATION ARRANGEMENT PLAN (6)
LPA4-53010-062	EARTHWORK AND CONCRETE DETAILS (3)

NOTE :

1) ALL BEAM TO BEAM CONNECTION SHALL HAVE EXTENDED SHEAR TABS WELDED TO BEAM FLANGES AS WELL AS BEAM WEBS.

REV.NO.	DESCRIPTION	DRAWN	CHECKED	DATE
△				. .
△				. .
△				. .
△				. .
△				. .

FOR BID
DATE: OCT.07'26
SHINTECH

JOB NO. EA-503
BUILDING WORK FOR CA4

REV.	DESCRIPTION	DWN	CHKD	A/E	CHIEF	MGR.	APPR.	DATE
								/ /
								/ /
0 B	FOR PE APPROVAL	S.B						10/06/26
0 A	FOR REVIEW	(ORIGINAL SIGNED)						01/08/26

SHINTECH PLAQUEMINE CA PLANT-4

300/800 AREA

STEEL SUPPORT DETAIL

FOR 4APU-980J

SHINTECH

APPROVED BY	TAKEDA	DATE	JAN. 08. 26
CHECKED BY	IZUMI	SCALE	1" =1'-0"
DRAWN BY	TTCL	DWG. No.	LPA4-43000-010 △0

CONFIDENTIAL : SHINTECH, ALL RIGHTS RESERVED. THE DRAWINGS, SPECIFICATIONS AND INFORMATIONS ARE THE PROPERTY OF SHINTECH, AND CONFIDENTIAL.

4BLDG-A901
SCOPE OF BUILDING CONTRACTOR

W=4787.00 | B | X10 | X9 | W=4565.00

222'-0"

N=4408.00

MATCH LINE SEE DWG.NO.LPA4-53000-002

PIPE RACK "D"

CONCRETE SRAIR W/HANDRAIL (GALV.)

RC. RETAINING WALL SCOPE OF BUILDING CONTRACTOR

15" RCP CULVERT 40' LG CS12-8

15" RCP CULVERT 56' LG CS12-8

℄ 20' ROAD W=4745.00

DITCH

DIKE BY OTHER TOP OF CURB EL 17'-0" (TYP.)

℄ CHEMICAL STORAGE CONTAINER

W=4722.50

W=4711.50

RCW-01001-48-B01 TOP EL+9.00' N=4240.50 EXIST.

DITCH

CW-01001-48-B01 TOP EL+9.00' N=4234.17 EXIST.

℄ 24' ROAD EXIST.

MATCH LINE SEE DWG.NO.LPA4-51500-005

MATCH LINE SEE DWG.NO.LPA4-59000-004

MATCH LINE SEE DWG.NO.LPA4-51500-004

MATCH LINE SEE DWG.NO.LPA4-51500-001

N=4208.00

R317 R316 R315 R314 R313 R312 R311 Y6 Y5

R022 R021 R020 R019 R018 R017 R016 R015 R014 R013 R012

PN
0°
90°
180°
270°

LEGEND

- INDICATES LIMIT OF CONC. PAVING W/#4@12" EA.WAY
- INDICATES LIMIT OF CONC. PAVING
- INDICATES LIMIT OF LIMESTONE PAVING
- 6.0 INDICATES FINISH ELEVATION
- (6.0) INDICATES FLOW ELEVATION
- INDICATES DIRECTION OF DRAIN
- INDICATES GROUNDING PIGTAIL

REFERENCE DRAWINGS

DWG. NO.	DESCRIPTION
LPA4-50008-004	PIPE RACK FOUNDATION ARRANGEMENT PLAN
LPA4-53010-061	EARTHWORK AND CONCRETE DETAILS (2)
LPA4-53010-051	CONCRETE PAVING / JOINT DETAILS (2)
LPA4-53010-053-054	TRENCH DETAILS (1)-(2)
LPA4-53010-065	TRENCH END DETAILS

THIS DWG.

KEY PLAN

REV.	DESCRIPTION	DWN	CHKD	A/E	CHIEF	MGR.	APPR.	DATE
0/E	FOR PE APPROVAL	S.K						10/02/26
0/D	FOR PE APPROVAL	(ORIGINAL SIGNED)						07/02/26
0/C	FOR PE APPROVAL	(ORIGINAL SIGNED)						06/26/26
0/B	FOR PE APPROVAL	(ORIGINAL SIGNED)						06/17/26

FOR BID
DATE: OCT.07'26
SHINTECH

JOB NO. EA-503
BUILDING WORK FOR CA4

REV.NO.	DESCRIPTION	DRAWN	CHECKED	DATE
△				
△				
△				
△				
△				

SHINTECH PLAQUEMINE CA PLANT-4

300/800 AREA

FOUNDATION ARRANGEMENT PLAN (1)

SHINTECH

APPROVED BY	KOYAMA	DATE	JAN. 22. 26
CHECKED BY	IZUMI	SCALE	3/32" =1'-0"
DRAWN BY	TTCL	DWG. No.	LPA4-53000-001 △0

CONFIDENTIAL : SHINTECH, ALL RIGHTS RESERVED. THE DRAWINGS, SPECIFICATIONS AND INFORMATIONS ARE THE PROPERTY OF SHINTECH, AND CONFIDENTIAL.

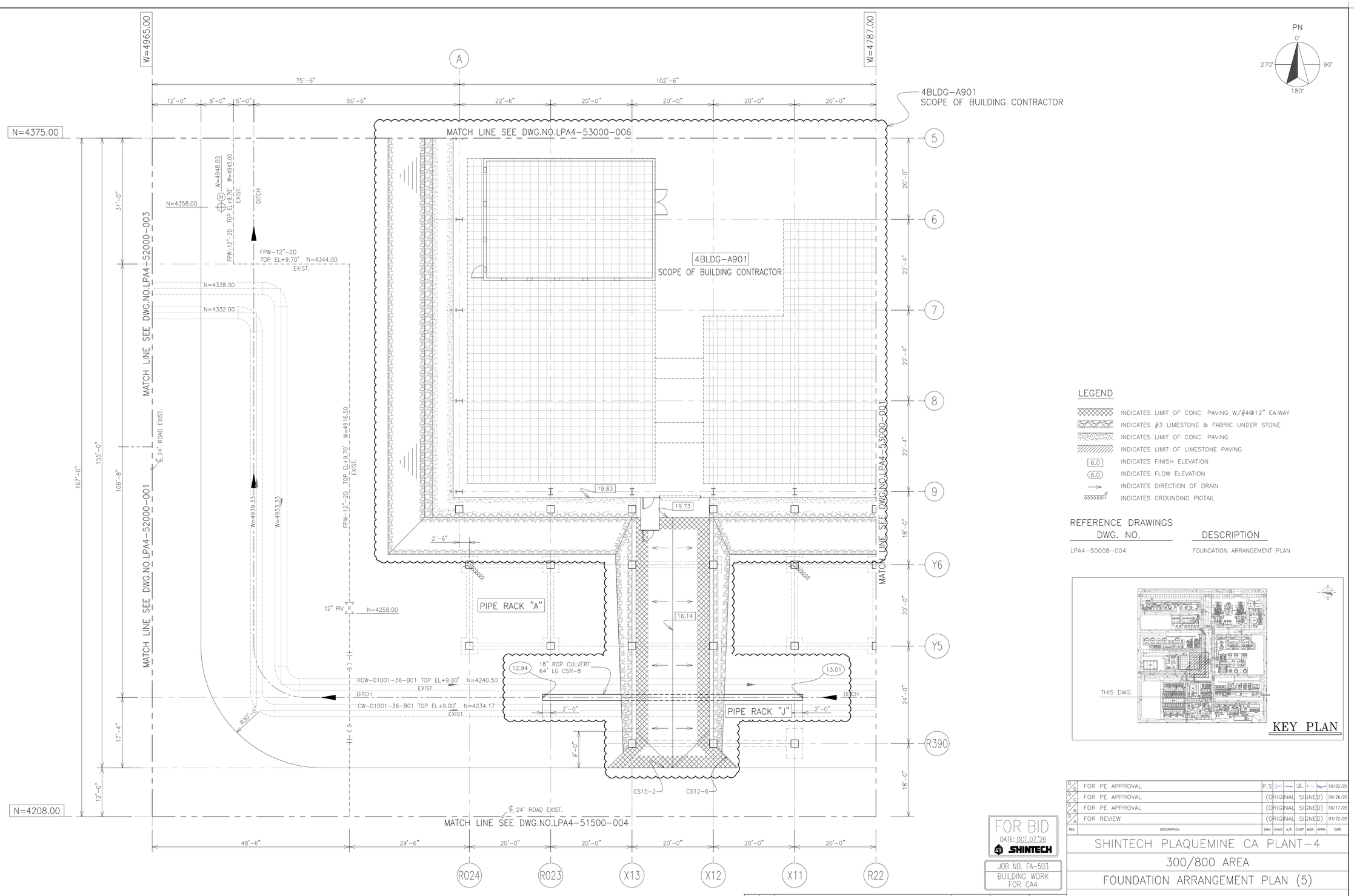

LEGEND

- INDICATES LIMIT OF CONC. PAVING W/#4@12" EA.WAY
- INDICATES #3 LIMESTONE & FABRIC UNDER STONE
- INDICATES LIMIT OF CONC. PAVING
- INDICATES LIMIT OF LIMESTONE PAVING
- 6.0 INDICATES FINISH ELEVATION
- (6.0) INDICATES FLOW ELEVATION
- INDICATES DIRECTION OF DRAIN
- INDICATES GROUNDING PIGTAIL

REFERENCE DRAWINGS

DWG. NO.	DESCRIPTION
LPA4-50008-004	FOUNDATION ARRANGEMENT PLAN

KEY PLAN

REV.	DESCRIPTION	DWN	CHKD	A/E	CHIEF	MGR.	APPR.	DATE
0/D	FOR PE APPROVAL	P.S						10/02/26
0/C	FOR PE APPROVAL	(ORIGINAL SIGNED)						06/26/26
0/B	FOR PE APPROVAL	(ORIGINAL SIGNED)						06/17/26
0/A	FOR REVIEW	(ORIGINAL SIGNED)						01/22/26

FOR BID
DATE: OCT.07.'26
SHINTECH

JOB NO. EA-503
BUILDING WORK FOR CA4

REV.NO.	DESCRIPTION	DRAWN	CHECKED	DATE
△				
△				
△				
△				
△				

SHINTECH PLAQUEMINE CA PLANT-4

300/800 AREA

FOUNDATION ARRANGEMENT PLAN (5)

—

SHINTECH

APPROVED BY KOYAMA	DATE	JAN.22.26	SCALE 3/32" =1'-0"
CHECKED BY IZUMI	DWG. No.	LPA4-53000-005	△0
DRAWN BY TTCL			

CONFIDENTIAL : SHINTECH, ALL RIGHTS RESERVED. THE DRAWINGS, SPECIFICATIONS AND INFORMATIONS ARE THE PROPERTY OF SHINTECH, AND CONFIDENTIAL.

W=4965.00 X15 X14 W=4756.00

N=4541.00 N=4375.00

209'-0"

12'-0" 13'-0" 11'-0" 16'-0" 6'-0" 9'-0" 2'-0" 30'-6" 21'-4" 34'-2" 21'-4" 7'-0" 14'-6" 21'-2"

11'-6" 19'-0" 18'-4 1/2" 2'-11 1/2" 15'-2" 19'-0" 18'-4 1/2" 2'-11 1/2"

166'-0"

R357 R356 R355 R354 R353 R352 R351 Y9 Y8

20'-0" 20'-0" 20'-0" 20'-0" 20'-0" 20'-0" 10'-0" 16'-0" 20'-0"

A B

75'-6" 12'-0" 13'-0" 11'-0" 16'-0" 6'-0" 9'-0" 2'-0" 2'-2" 4'-4" 22'-6" 20'-0" 20'-0" 20'-0" 20'-0" 13'-0" 6'-6" 2'-0" 8'-6" 1'-0" 115'-6" 18'-0"

4BLDG-A901
SCOPE OF BUILDING CONTRACTOR

MATCH LINE SEE DWG.NO.LPA4-53000-007

MATCH LINE SEE DWG.NO.LPA4-52000-005

MATCH LINE SEE DWG.NO.LPA4-53000-002

MATCH LINE SEE DWG.NO.LPA4-53000-001

MATCH LINE SEE DWG.NO.LPA4-53000-005

MATCH LINE SEE DWG.NO.LPA4-53000-001

4BLDG-A901
SCOPE OF BUILDING CONTRACTOR

PIPE RACK "P"

PIPE RACK "O"

SUMP DETAIL "A" (TYP.8)

4APU-985H 4APU-985F 4APU-985D 4APU-985C 4APU-985B 4APU-985A

NGR 4A900-012 NGR 4A900-022 NGR 4A900-011 NGR 4A900-021

TOP OF CURBEL EL 20'-2" (TYP.)

TOP OF CURB EL 20'-2" (TYP.)

TOP OF CURB EL 19'-10"(TYP.)

TR-4A900-01 TR-4A900-02 TR-4A900-10 TR-4A900-11 TR-4A900-12 TR-4A900-13 TR-4A900-14 TR-4A900-15 TR-4A900-16

C062A C062B 4APU-980J C062C C062D C061B

4APT-980J C064A

CAP-4A900-2A CAP-4A900-2B CAP-4A900-2C CAP-4A900-2D CAP-4A900-2E CAP-4A900-2F

CONCRETE STAIR W/HANDRAIL (GALV.)

CS15-2 CS12-6

15" RCP CULVERT 24 LG. CSR-8

15" RCP CULVERT EXIST.

24' ROAD EXIST.

DITCH

FPW-12"-2D TOP EL+9.70' EXIST. W=4945.00

N=4488.00 W=4948.00

12.74 12.71 12.66

DETAIL "A" (TYP.8)

2'-4" 2'-9" DEPTH 2'-4"

LEGEND

- INDICATES LIMIT OF CONC. PAVING W/#4@12" EA.WAY
- INDICATES LIMIT OF CONC. PAVING
- INDICATES LIMIT OF LIMESTONE PAVING
- INDICATES #3 LIMESTONE & FABRIC UNDER STONE
- 6.0 INDICATES FINISH ELEVATION
- (6.0) INDICATES FLOW ELEVATION
- INDICATES DIRECTION OF DRAIN
- INDICATES GROUNDING PIGTAIL

REFERENCE DRAWINGS

DWG. NO.	DESCRIPTION
LPA4-50008-004	PIPE RACK FOUNDATION ARRANGEMENT PLAN
LPA4-53010-050~051	CONCRETE PAVING / JOINT DETAILS (1)~(2)
LPA4-53010-056	JOINT ARRANGEMENT PLAN
LPA4-53010-061~064	EARTHWORK AND CONCRETE DETAILS (2)~(5)

THIS DWG.

KEY PLAN

REV.	DESCRIPTION	DWN	CHKD	A/E	CHIEF	MGR.	APPR.	DATE
0 F	FOR PE APPROVAL	S.K	[illegible]	[illegible]	[illegible]	[illegible]	[illegible]	10/02/26
0 E	FOR PE APPROVAL	(ORIGINAL SIGNED)						09/24/26
0 D	FOR PE APPROVAL	(ORIGINAL SIGNED)						02/07/26
0 C	FOR PE APPROVAL	(ORIGINAL SIGNED)						06/26/26

SHINTECH PLAQUEMINE CA PLANT-4

300/800 AREA

FOUNDATION ARRANGEMENT PLAN (6)

–

SHINTECH

APPROVED BY KOYAMA	DATE	JAN. 22 .26	SCALE 3/32" =1'-0"
CHECKED BY IZUMI	DWG. No.	LPA4-53000-006	0
DRAWN BY TTCL			

FOR BID
DATE: OCT. 07 '26
SHINTECH

JOB NO. EA-503
BUILDING WORK
FOR CA4

REV.NO.	DESCRIPTION	DRAWN	CHECKED	DATE
0				
1				
2				
3				
4				

CONFIDENTIAL : SHINTECH, ALL RIGHTS RESERVED. THE DRAWINGS, SPECIFICATIONS AND INFORMATIONS ARE THE PROPERTY OF SHINTECH, AND CONFIDENTIAL.

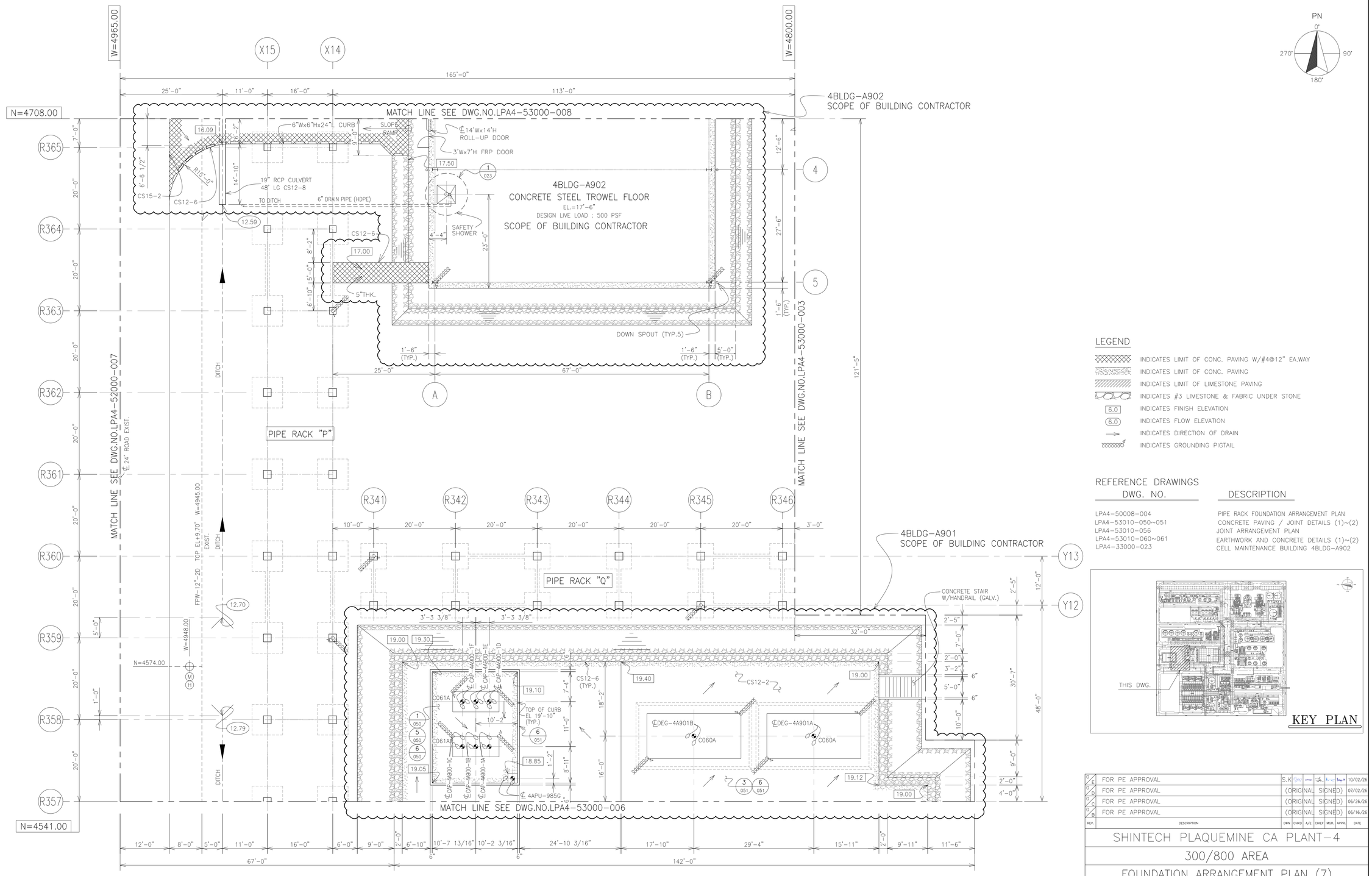

PN
0°
90°
180°
270°

LEGEND

- INDICATES LIMIT OF CONC. PAVING W/#4@12" EA.WAY
- INDICATES LIMIT OF CONC. PAVING
- INDICATES LIMIT OF LIMESTONE PAVING
- INDICATES #3 LIMESTONE & FABRIC UNDER STONE
- 6.0 INDICATES FINISH ELEVATION
- (6.0) INDICATES FLOW ELEVATION
- INDICATES DIRECTION OF DRAIN
- INDICATES GROUNDING PIGTAIL

REFERENCE DRAWINGS

DWG. NO.	DESCRIPTION
LPA4-50008-004	PIPE RACK FOUNDATION ARRANGEMENT PLAN
LPA4-53010-050~051	CONCRETE PAVING / JOINT DETAILS (1)~(2)
LPA4-53010-056	JOINT ARRANGEMENT PLAN
LPA4-53010-060~061	EARTHWORK AND CONCRETE DETAILS (1)~(2)
LPA4-33000-023	CELL MAINTENANCE BUILDING 4BLDG-A902

KEY PLAN

REV.	DESCRIPTION	DWN	CHKD	A/E	CHIEF	MGR.	APPR.	DATE
0/E	FOR PE APPROVAL	S.K						10/02/26
0/D	FOR PE APPROVAL	(ORIGINAL SIGNED)						07/02/26
0/C	FOR PE APPROVAL	(ORIGINAL SIGNED)						06/26/26
0/B	FOR PE APPROVAL	(ORIGINAL SIGNED)						06/16/26

SHINTECH PLAQUEMINE CA PLANT-4

300/800 AREA

FOUNDATION ARRANGEMENT PLAN (7)

—

SHINTECH

APPROVED BY	KOYAMA	DATE	JAN. 22 .26
CHECKED BY	IZUMI	SCALE	3/32" =1'-0"
DRAWN BY	TTCL	DWG. No.	LPA4-53000-007 0

FOR BID
DATE: OCT.07'26
SHINTECH

JOB NO. EA-503
BUILDING WORK FOR CA4

REV.NO.	DESCRIPTION	DRAWN	CHECKED	DATE
△				. .
△				. .
△				. .
△				. .
△				. .

CONFIDENTIAL : SHINTECH, ALL RIGHTS RESERVED. THE DRAWINGS, SPECIFICATIONS AND INFORMATIONS ARE THE PROPERTY OF SHINTECH, AND CONFIDENTIAL.

CONCRETE PAVING IN JOINT SEALANT IMPERVIOUS CONTAINMENT

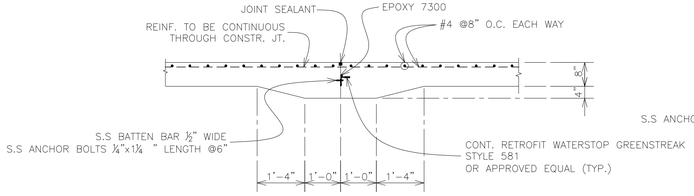

1 — CONSTRUCTION JOINT DETAIL

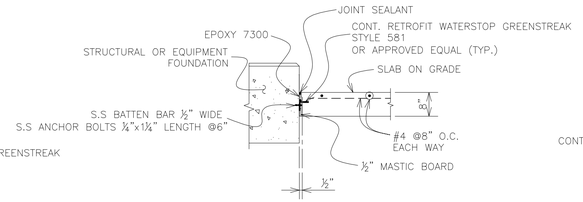

2 — EQUIPMENT SPREAD FOOTING

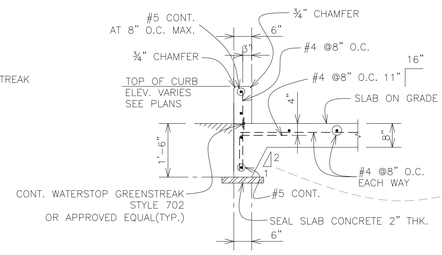

3 — TYP. EDGE WITH CURB DETAIL

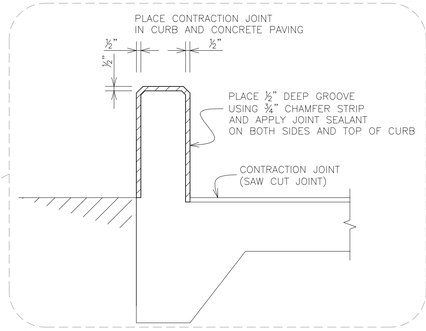

— — CONTRACTION JOINT DETAIL OF CURB

SCALE : 1-1/2" = 1'-0"

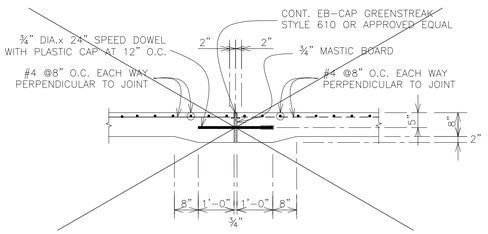

4 — EXPANSION JOINT DETAIL

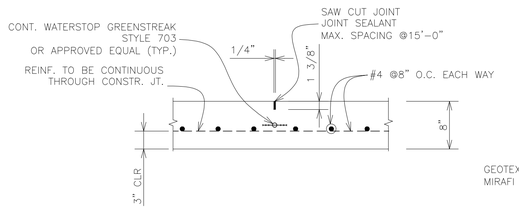

5 — CONTRACTION JOINT

SCALE : 1" = 1'-0"

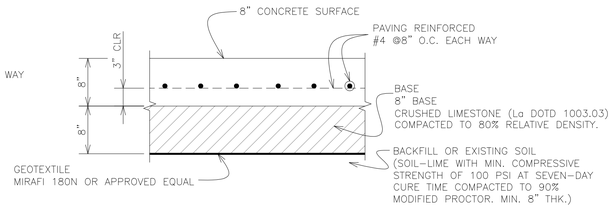

6 — TYP.SLAB ON GRADE AND SUB BASE DETAIL

SCALE : 1" = 1'-0"
NOTE : 28-DAY CONCRETE COMPRESSIVE STRENGTH : 4000 PSI

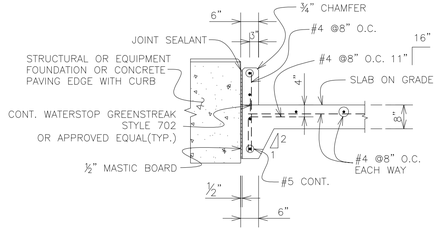

7 — TYP. EDGE WITH CURB AGAINST FOUNDATION

NOTES :

1.EPOXY 7300 IS A PRODUCT OF "GREENSTREAK"

CONCRETE PAVING IN CAUSTIC SODA AREA

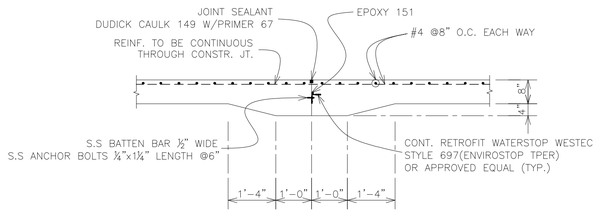

8 — CONSTRUCTION JOINT DETAIL

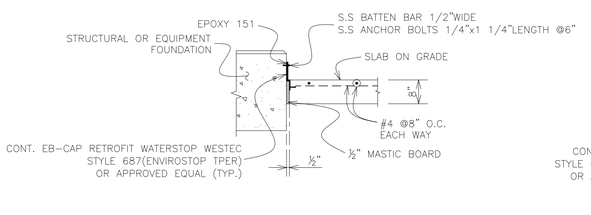

9 — EQUIPMENT SPREAD FOOTING

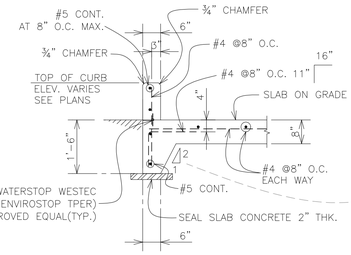

10 — TYP. EDGE WITH CURB DETAIL

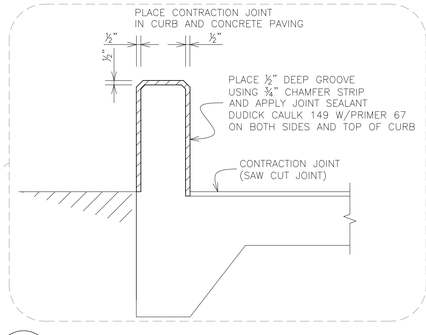

— — CONTRACTION JOINT DETAIL OF CURB

SCALE : 1-1/2" = 1'-0"

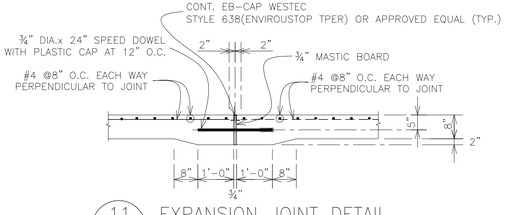

11 — EXPANSION JOINT DETAIL

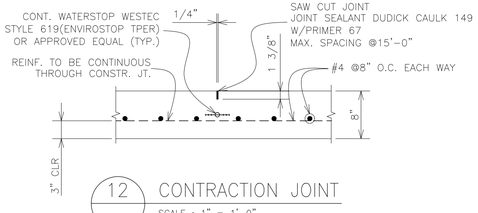

12 — CONTRACTION JOINT

SCALE : 1" = 1'-0"

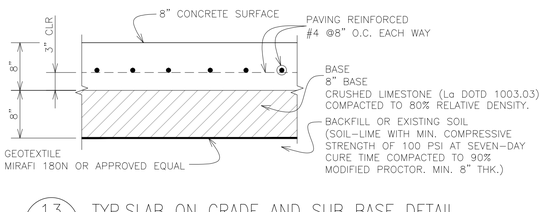

13 — TYP.SLAB ON GRADE AND SUB BASE DETAIL

SCALE : 1" = 1'-0"
NOTE : 28-DAY CONCRETE COMPRESSIVE STRENGTH : 4000 PSI

NOTES :

1.EPOXY 151 IS A PRODUCT OF "WESTEC"

FOR BID
DATE: OCT.07'26
SHINTECH

JOB NO. EA-503
BUILDING WORK FOR CA4

REV.NO.	DESCRIPTION	DRAWN	CHECKED	DATE
0	FOR PE APPROVAL	P.S	[illegible]	06/16/26
A	FOR REVIEW	(ORIGINAL SIGNED)		01/15/26

SHINTECH PLAQUEMINE CA PLANT-4

300/800 AREA

CONCRETE PAVING / JOINT DETAILS (1)

—

SHINTECH

APPROVED BY	KOYAMA	DATE	JAN. 15 .26	SCALE	1/2" =1'-0"
CHECKED BY	IZUMI	DWG. No.	LPA4-53010-050		0
DRAWN BY	TTCL				

CONFIDENTIAL : SHINTECH, ALL RIGHTS RESERVED. THE DRAWINGS, SPECIFICATIONS AND INFORMATIONS ARE THE PROPERTY OF SHINTECH, AND CONFIDENTIAL.

CONCRETE PAVING IN 300/800 AREA

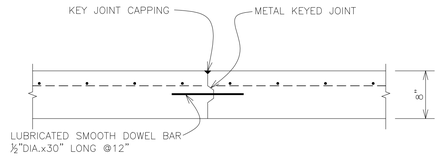

3 — CONSTRUCTION JOINT DETAIL
SCALE : 1" = 1'-0"

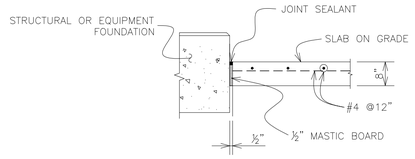

6 — EQUIPMENT SPREAD FOOTING
SCALE : 1/2" = 1'-0"

CONCRETE PAVING IN CAUSTIC SODA AREA

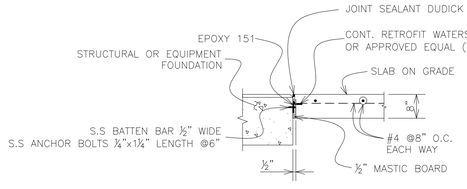

7 — EQUIPMENT SPREAD FOOTING
SCALE : 1/2" = 1'-0"

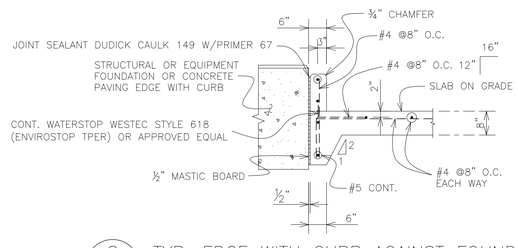

8 — TYP. EDGE WITH CURB AGAINST FOUNDATION
SCALE : 1/2" = 1'-0"

NOTES :
1.EPOXY 151 IS A PRODUCT OF "WESTEC"

GENERAL

1. FOR CONCRETE GENERAL NOTES SEE THE FOLLOWING DRAWINGS:
   LPG4-50000-001
   LPG4-50000-002
2. STANDARD DETAIL FOR TYPICAL REINFORCEMENT AROUND REENTRANT CORNER ARE AS FOLLOWS.

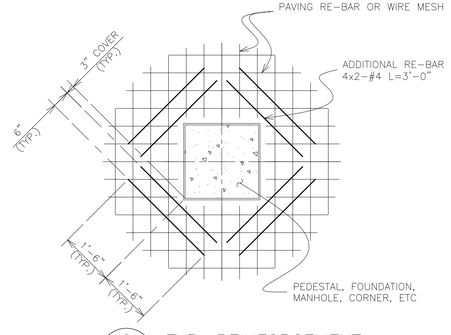

9 — TYP. REINFORCEMENT
SCALE : 1/2" = 1'-0"

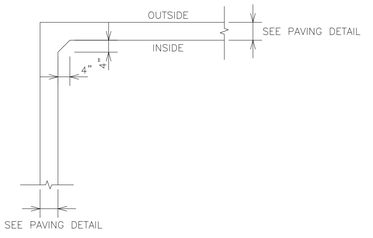

15 — TYP. CURB INSIDE CORNER DETAIL
SCALE : 1/2" = 1'-0"

FOR BID
DATE: OCT.07'26
SHINTECH

JOB NO. EA-503
BUILDING WORK FOR CA4

REV.	DESCRIPTION	DWN	CHKD	A/E	CHIEF	MGR.	APPR.	DATE
0/B	FOR PE APPROVAL	P.S.	DWN	CHKD	A/E	CHIEF	MGR.	07/02/26
0/A	FOR REVIEW	(ORIGINAL SIGNED)						01/15/26
								/ /
								/ /

REV.NO.	DESCRIPTION	DRAWN	CHECKED	DATE
△				. .
△				. .
△				. .
△				. .
△				. .

SHINTECH PLAQUEMINE CA PLANT-4
300/800 AREA
CONCRETE PAVING / JOINT DETAILS (2)
—

SHINTECH

APPROVED BY KOYAMA
CHECKED BY IZUMI
DRAWN BY TTCL

DATE	JAN. 15 .26	SCALE	1/2" =1'-0"
DWG. No.	LPA4-53010-051		0

CONFIDENTIAL : SHINTECH, ALL RIGHTS RESERVED. THE DRAWINGS, SPECIFICATIONS AND INFORMATIONS ARE THE PROPERTY OF SHINTECH, AND CONFIDENTIAL.

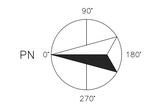

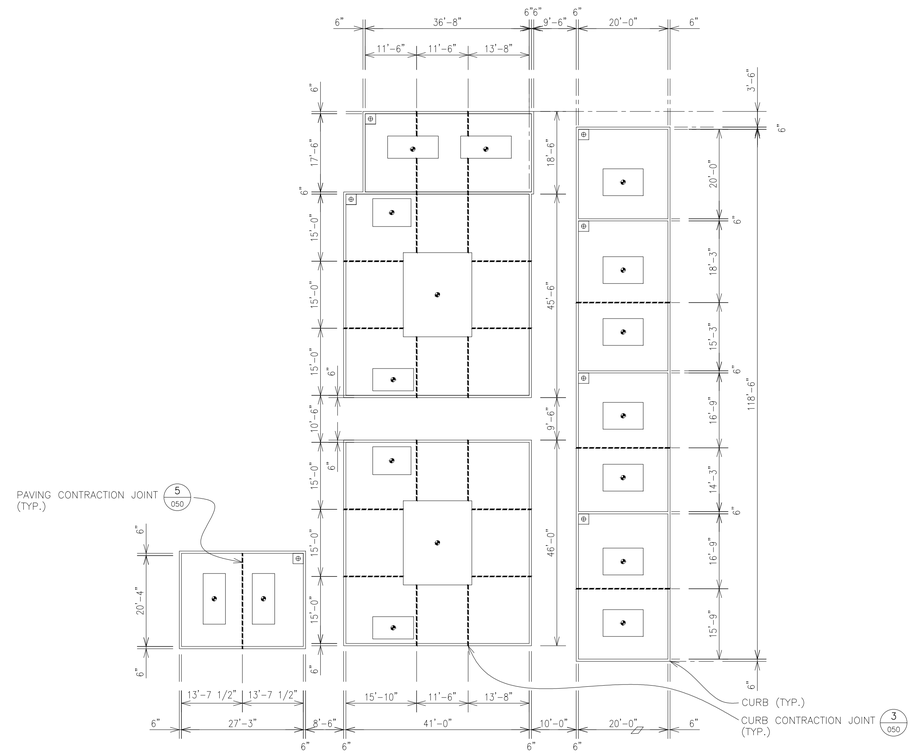

CONTRACTION JOINT ARRANGEMENT PLAN FOR CONCRETE PAVING/ CURB

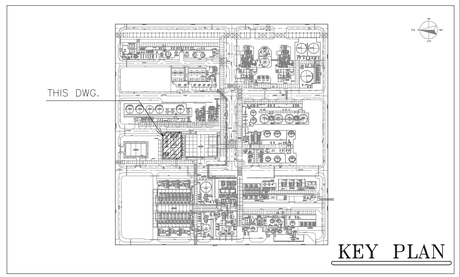

KEY PLAN

LEGEND :

------- : CONTRACTION JOINT

REV.	DESCRIPTION	DRWN	CHKD	A/E	CHIEF	MGR.	APPR.	DATE
0/C	FOR PE APPROVAL	P.S						10/02/26
0/B	FOR PE APPROVAL	(ORIGINAL SIGNED)						07/02/26
0/A	FOR REVIEW	(ORIGINAL SIGNED)						01/15/26

SHINTECH PLAQUEMINE CA PLANT-4

300/800 AREA BESIDE 4BLDG-A901

JOINT ARRANGEMENT PLAN

—

SHINTECH

APPROVED BY	KOYAMA	DATE	JAN. 15, 26
CHECKED BY	IZUMI	SCALE	1/16" =1'-0"
DRAWN BY	TTCL	DWG. No.	LPA4-53010-056 0

FOR BID
DATE: OCT. 07, '26
SHINTECH

JOB NO. EA-503
BUILDING WORK
FOR CA4

REV.NO.	DESCRIPTION	DRAWN	CHECKED	DATE
0				
1				
2				
3				
4				

CONFIDENTIAL : SHINTECH, ALL RIGHTS RESERVED. THE DRAWINGS, SPECIFICATIONS AND INFORMATIONS ARE THE PROPERTY OF SHINTECH, AND CONFIDENTIAL.

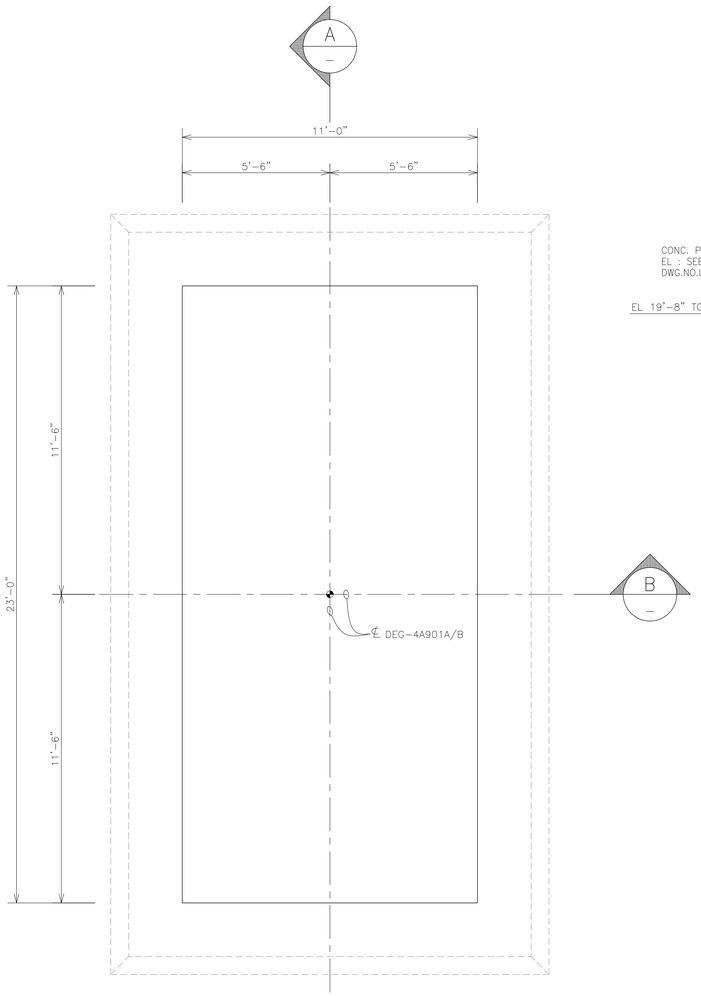

PLAN : DEG-4A901A/B

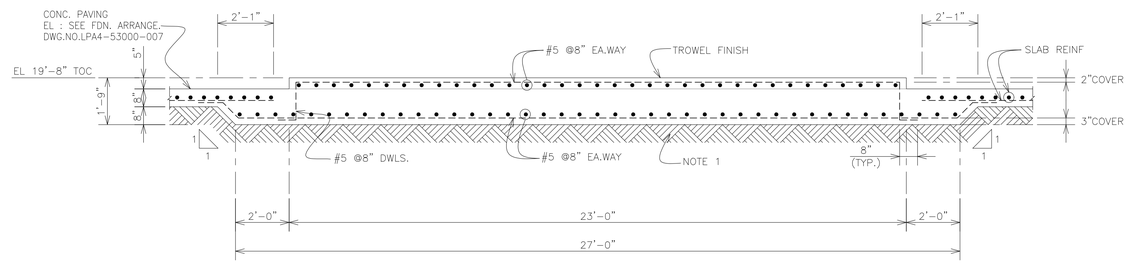

A SECTION

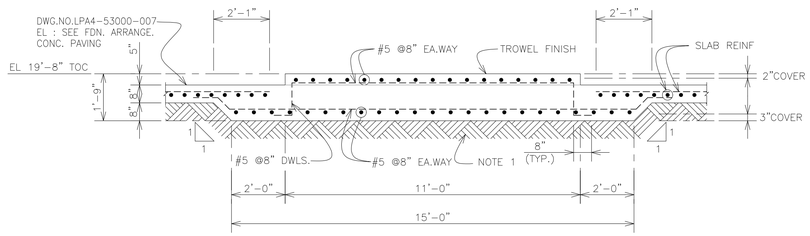

B SECTION

C060A | NO.REQ'D : 2 SETS

REFERENCE DRAWINGS

DWG. NO.	DESCRIPTION
LPA4-53000-007	FOUNDATION ARRANGEMENT PLAN (7)

NOTES

1) FILL BENEATH THE SPREAD FOOTINGS SHOULD BE COMPACTED TO 90% OF ITS MAXIMUM MODIFIED PROCTOR DRY DENSITY FOR CLAY, STRUCTURAL FILL SHALL BE PLACED IN LIFTS OF 8 INCHES MAXIMUM IN LOOSE DEPTH.

REV.NO.	DESCRIPTION	DRAWN	CHECKED	DATE
△				. .
△				. .
△				. .
△				. .
△				. .

FOR BID
DATE: OCT.07'26
SHINTECH

JOB NO. EA-503
BUILDING WORK FOR CA4

REV.	DESCRIPTION	DWN	CHKD	A/E	CHIEF	MGR.	APPR.	DATE
0 B	FOR PE APPROVAL	P.S	[illegible]	[illegible]	[illegible]	[illegible]	[illegible]	12/17/25
0 A	FOR REVIEW	(ORIGINAL SIGNED)						09/19/25

SHINTECH PLAQUEMINE CA PLANT-4

300/800 AREA BESIDE 4BLDG-A901

EARTHWORK AND CONCRETE DETAILS

WITH REBAR ARRANGEMENT PLAN (1)

SHINTECH

APPROVED BY	KOYAMA	DATE	SEP. 19, 25
CHECKED BY	IZUMI	SCALE	3/8" =1'-0"
DRAWN BY	TTCL	DWG. No.	LPA4-53010-060 △0

CONFIDENTIAL : SHINTECH, ALL RIGHTS RESERVED. THE DRAWINGS, SPECIFICATIONS AND INFORMATIONS ARE THE PROPERTY OF SHINTECH, AND CONFIDENTIAL.

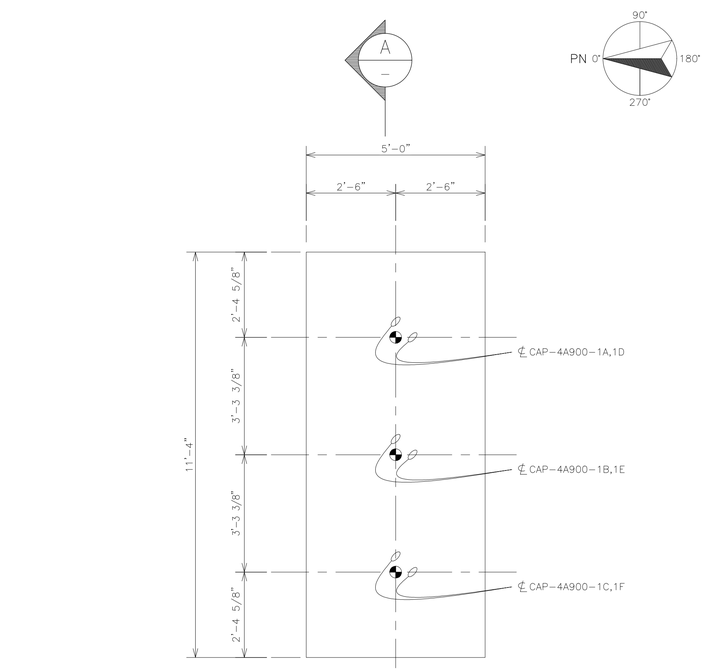

PLAN : CAP-4A900-1A,1B,1C/1D,1E,1F

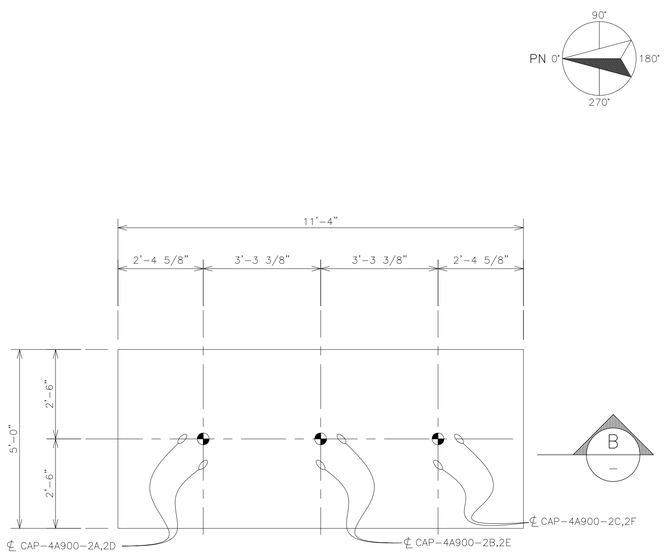

PLAN : CAP-4A900-2A,2B,2C/2D,2E,2F

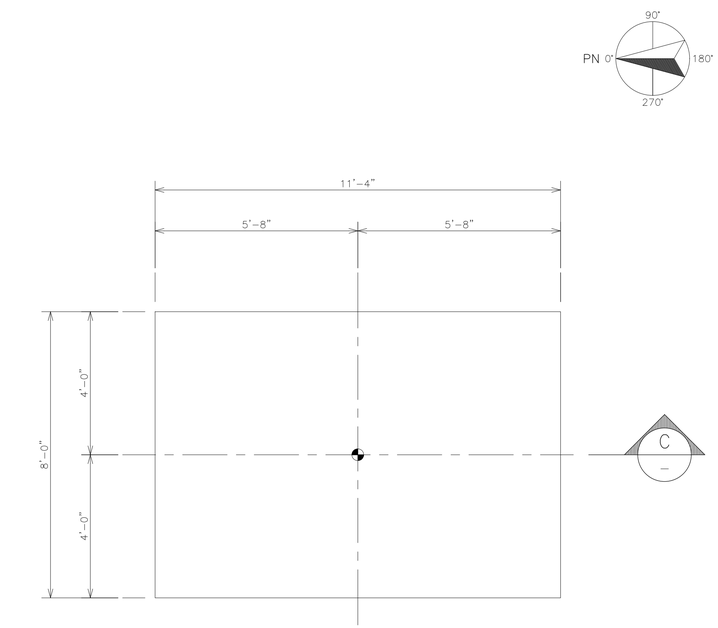

PLAN : HVAC

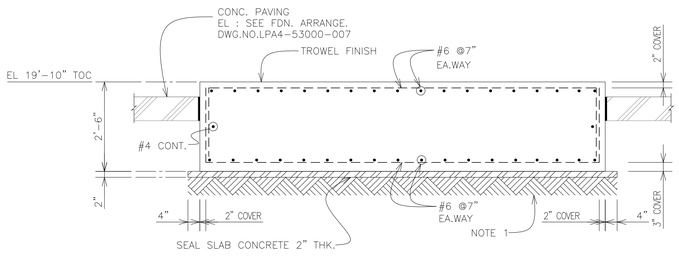

A SECTION

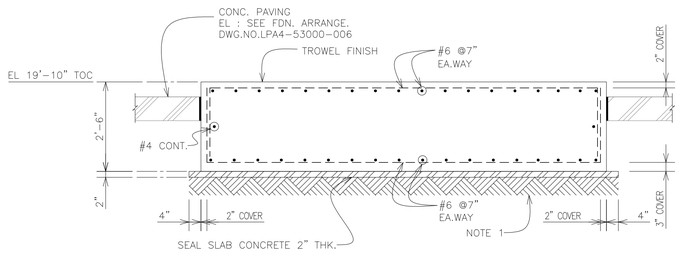

B SECTION

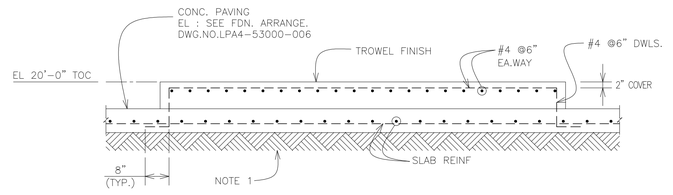

C SECTION

C061A NO.REQ'D : 2 SETS

C061B NO.REQ'D : 2 SETS

C061C NO.REQ'D : 6 SETS

REFERENCE DRAWINGS

DWG. NO.	DESCRIPTION
LPA4-53000-006	FOUNDATION ARRANGEMENT PLAN (6)
LPA4-53000-007	FOUNDATION ARRANGEMENT PLAN (7)

NOTES

1) FILL BENEATH THE SPREAD FOOTINGS SHOULD BE COMPACTED TO 90% OF ITS MAXIMUM MODIFIED PROCTOR DRY DENSITY FOR CLAY, STRUCTURAL FILL SHALL BE PLACED IN LIFTS OF 8 INCHES MAXIMUM IN LOOSE DEPTH.

REV.NO.	DESCRIPTION	DRAWN	CHECKED	DATE
△				. .
△				. .
△				. .
△				. .
△				. .

REV.	DESCRIPTION	DWN.	CHKD	A/E	CHIEF	MGR.	APPR.	DATE
								/ /
								/ /
0 B	FOR PE APPROVAL	S.B						10/06/26
0 A	FOR REVIEW	(ORIGINAL SIGNED)						01/08/26

FOR BID
DATE: OCT.07.'26
SHINTECH

JOB NO. EA-503
BUILDING WORK FOR CA4

SHINTECH PLAQUEMINE CA PLANT-4

300/800 AREA BESIDE 4BLDG-A901

EARTHWORK AND CONCRETE DETAILS

WITH REBAR ARRANGEMENT PLAN (2)

SHINTECH

APPROVED BY	KOYAMA	DATE	JAN. 08 .26
CHECKED BY	IZUMI	SCALE	1/2" =1'-0"
DRAWN BY	TTCL	DWG. No.	LPA4-53010-061 0

CONFIDENTIAL : SHINTECH, ALL RIGHTS RESERVED. THE DRAWINGS, SPECIFICATIONS AND INFORMATIONS ARE THE PROPERTY OF SHINTECH, AND CONFIDENTIAL.

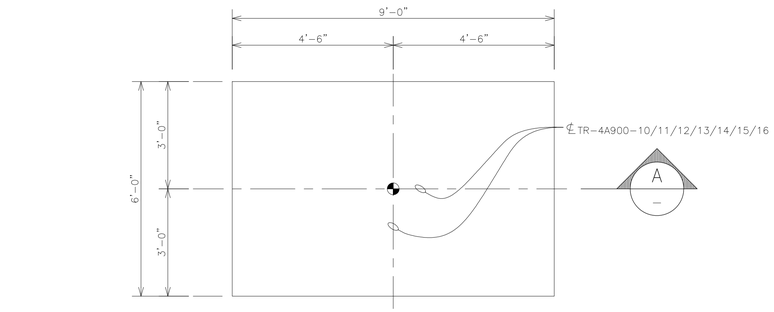

PLAN : TR-4A900-10/11/12/13/14/15/16

SCALE : 1/2" = 1'-0"

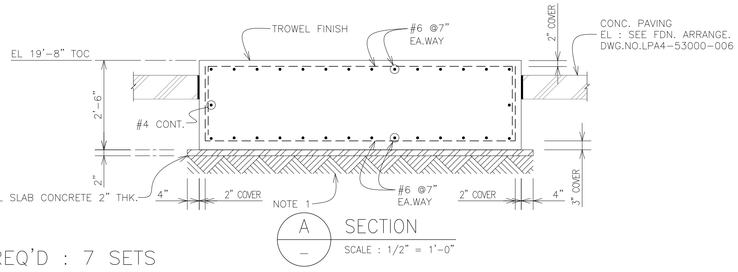

A SECTION

SCALE : 1/2" = 1'-0"

C062A NO.REQ'D : 7 SETS

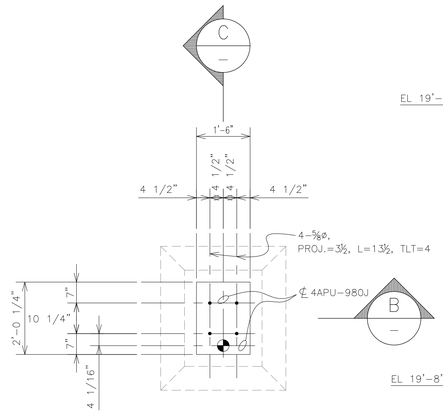

PLAN : 4APU-980J

SCALE : 1/2" = 1'-0"

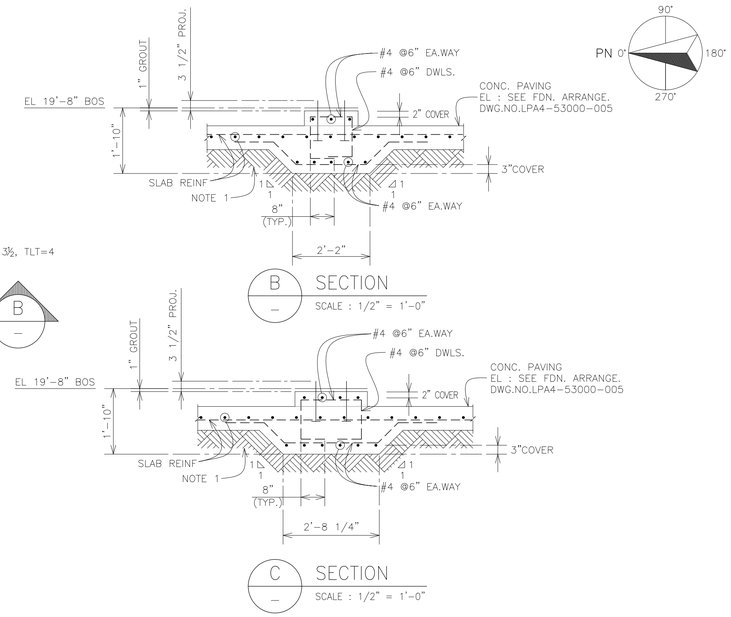

C062B NO.REQ'D : 1 SET

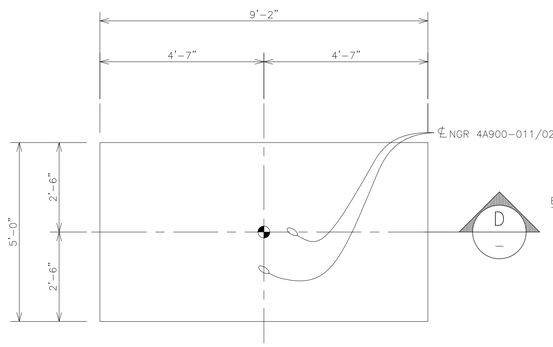

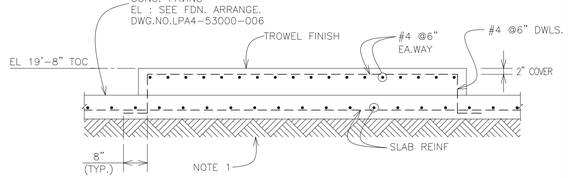

PLAN : NGR-4A900-011, NGR-4A900-021

D SECTION

C062C NO.REQ'D : 2 SETS

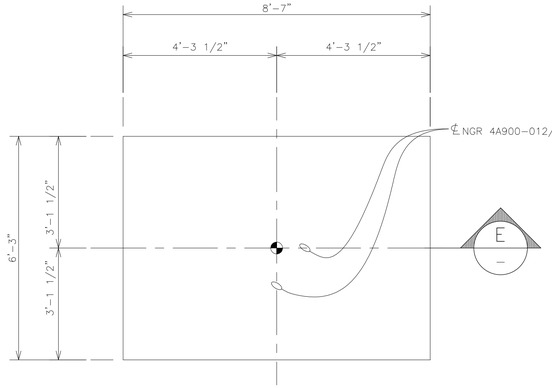

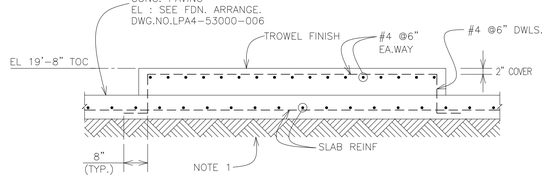

PLAN : NGR-4A900-012, NGR-4A900-022

E SECTION

C062D NO.REQ'D : 2 SETS

REFERENCE DRAWINGS

DWG. NO.	DESCRIPTION
LPA4-53000-005	FOUNDATION ARRANGEMENT PLAN (5)
LPA4-53000-006	FOUNDATION ARRANGEMENT PLAN (6)
LPA4-43000-010	STEEL SUPPORT DETAILS FOR 4APU-980J

NOTES

1) FILL BENEATH THE SPREAD FOOTINGS SHOULD BE COMPACTED TO 90% OF ITS MAXIMUM MODIFIED PROCTOR DRY DENSITY FOR CLAY, STRUCTURAL FILL SHALL BE PLACED IN LIFTS OF 8 INCHES MAXIMUM IN LOOSE DEPTH.

REV.NO.	DESCRIPTION	DRAWN	CHECKED	DATE
△				. .
△				. .
△				. .
△				. .
△				. .

FOR BID
DATE: OCT.07'26
SHINTECH

JOB NO. EA-503
BUILDING WORK FOR CA4

REV.	DESCRIPTION	DWN	CHKD	A/E	CHIEF	MGR.	APPR.	DATE
0/C	FOR PE APPROVAL	S.B						10/06/26
0/B	FOR REVIEW	(ORIGINAL SIGNED)						09/24/26
0/A	FOR REVIEW	(ORIGINAL SIGNED)						01/08/26

SHINTECH PLAQUEMINE CA PLANT-4

300/800 AREA BESIDE 4BLDG-A901

EARTHWORK AND CONCRETE DETAILS WITH REBAR ARRANGEMENT PLAN (3)

SHINTECH

APPROVED BY	KOYAMA	DATE	JAN.08.26
CHECKED BY	IZUMI	SCALE	1/2" =1'-0"
DRAWN BY	TTCL	DWG. No.	LPA4-53010-062 △0

CONFIDENTIAL : SHINTECH, ALL RIGHTS RESERVED. THE DRAWINGS, SPECIFICATIONS AND INFORMATIONS ARE THE PROPERTY OF SHINTECH, AND CONFIDENTIAL.

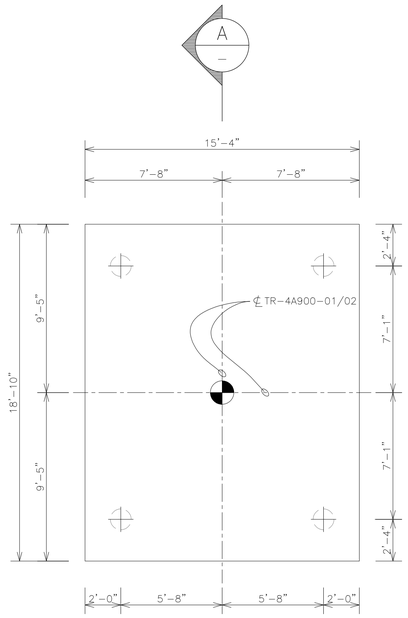

PLAN : TR-4A900-01/02

SCALE : 1/4" = 1'-0"

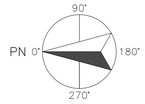

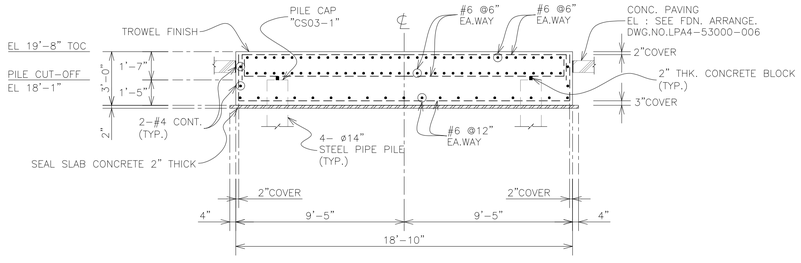

A SECTION

SCALE : 1/4" = 1'-0"

C063A | NO.REQ'D : 2 SETS

REFERENCE DRAWINGS

DWG. NO.	DESCRIPTION
LPA4-53000-006	FOUNDATION ARRANGEMENT PLAN (6)
LPA4-53003-002	PILE ARRANGEMENT PLAN (2)

FOR BID
DATE: OCT.07'26
SHINTECH

JOB NO. EA-503
BUILDING WORK FOR CA4

REV.NO.	DESCRIPTION	DRAWN	CHECKED	DATE
△				. .
△				. .
△				. .
△				. .
△				. .

REV.	DESCRIPTION	DWN	CHKD	A/E	CHIEF	MGR.	APPR.	DATE
1/C	FOR CONSTRUCTION	P.S	DN	[illegible]	[illegible]	A [illegible]	[illegible]	03/18/26
0/B	FOR PE APPROVAL	(ORIGINAL SIGNED)						12/17/25
0/A	FOR REVIEW	(ORIGINAL SIGNED)						11/28/25

SHINTECH PLAQUEMINE CA PLANT-4

300/800 AREA BESIDE 4BLDG-A901

EARTHWORK AND CONCRETE DETAILS

WITH REBAR ARRANGEMENT PLAN (4)

SHINTECH

APPROVED BY KOYAMA
CHECKED BY IZUMI
DRAWN BY TTCL

DATE	NOV. 28.25	SCALE	1/4" =1'-0"
DWG. No.	LPA4-53010-063		1

CONFIDENTIAL : SHINTECH, ALL RIGHTS RESERVED. THE DRAWINGS, SPECIFICATIONS AND INFORMATIONS ARE THE PROPERTY OF SHINTECH, AND CONFIDENTIAL.

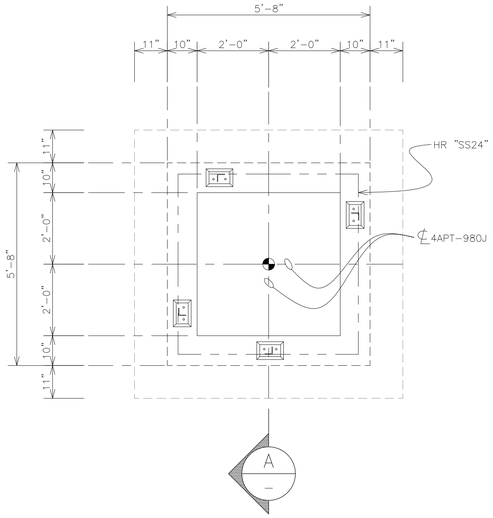

PLAN : 4APT-980J

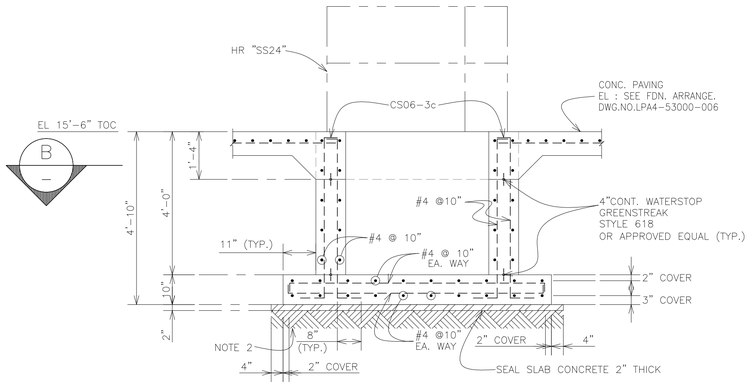

A SECTION

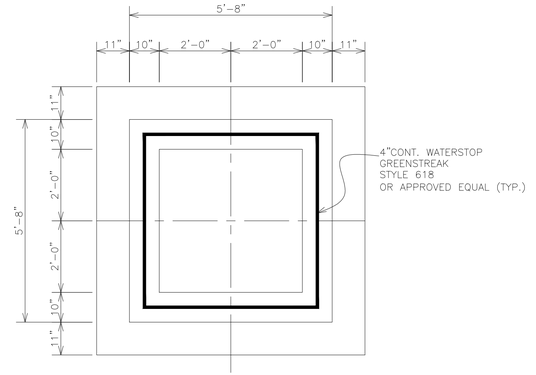

B SECTION

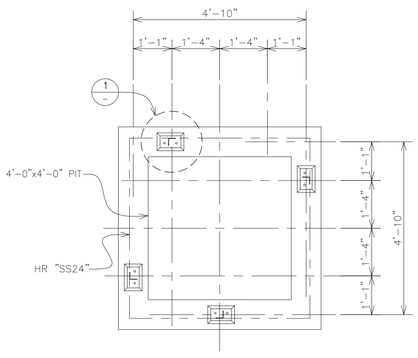

4APT-980J POST PLAN

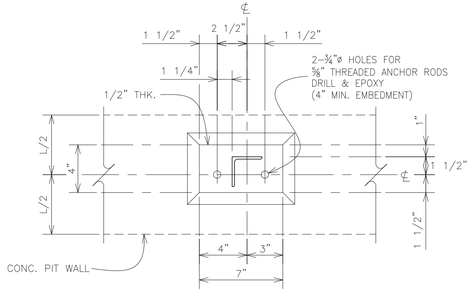

1 DETAIL

SCALE : 2" = 1'-0"

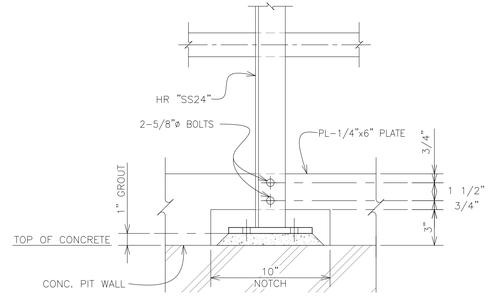

TOE BOARD DETAIL

SCALE : 2" = 1'-0"

C064A NO.REQ'D : 1 SET

REFERENCE DRAWINGS DWG. NO.	DESCRIPTION
LPA4-53000-006	FOUNDATION ARRANGEMENT PLAN (6)

NOTES

1) FOUNDATION CONTRACTOR IS TO FURNISH ANCHOR BOLT TO OWNER.
2) FILL BENEATH THE SPREAD FOOTINGS SHOULD BE COMPACTED TO 90% OF ITS MAXIMUM MODIFIED PROCTOR DRY DENSITY FOR CLAY, STRUCTURAL FILL SHALL BE PLACED IN LIFTS OF 8 INCHES MAXIMUM IN LOOSE DEPTH.

REV.NO.	DESCRIPTION	DRAWN	CHECKED	DATE
△				. .
△				. .
△				. .
△				. .
△				. .

FOR BID
DATE: OCT.07'26
SHINTECH

JOB NO. EA-503
BUILDING WORK FOR CA4

REV.	DESCRIPTION	DWN	CHKD	A/E	CHIEF	MGR.	APPR.	DATE
								/ /
								/ /
0 B	FOR PE APPROVAL	S.B						10/06/26
0 A	FOR REVIEW	(ORIGINAL SIGNED)						01/08/26

SHINTECH PLAQUEMINE CA PLANT-4

300/800 AREA BESIDE 4BLDG-A901

EARTHWORK AND CONCRETE DETAILS

WITH REBAR ARRANGEMENT PLAN (5)

SHINTECH

APPROVED BY	KOYAMA	DATE	JAN.08.26	SCALE	1/2" =1'-0"
CHECKED BY	IZUMI	DWG. No.	LPA4-53010-064		0
DRAWN BY	TTCL				

CONFIDENTIAL : SHINTECH, ALL RIGHTS RESERVED. THE DRAWINGS, SPECIFICATIONS AND INFORMATIONS ARE THE PROPERTY OF SHINTECH, AND CONFIDENTIAL.

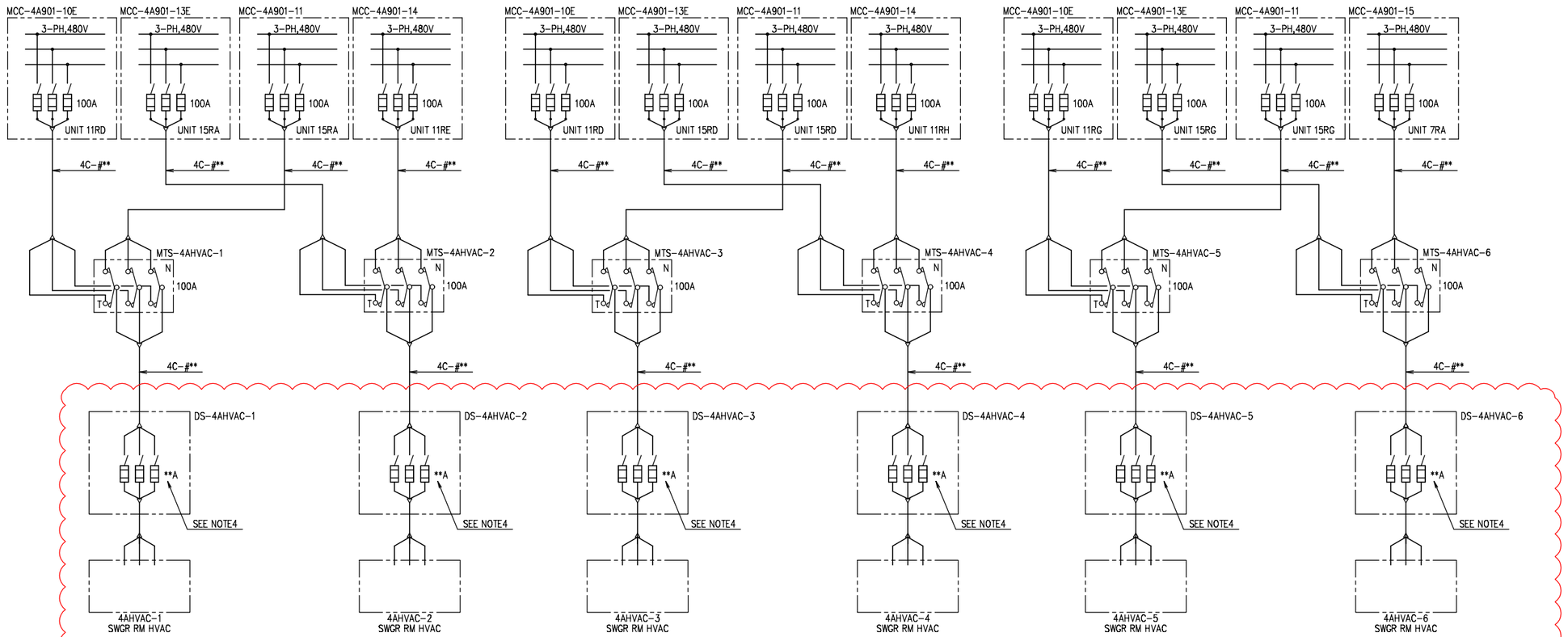

TO BE PROVIDED AND INSTALLED BY BUILDING CONTRACTOR

CERTIFIED FOR BID
DATE: SEP 22'26
SHINTECH

JOB NO. EA-503
CA4
BUILDING WORK

NOTES

1. OWNER WILL SUPPLY FOLLOWING CIRCUITS ;
   1) SEVEN(7)-480V,3-PH,3-W,CIRCUIT FOR HVAC UNITS.
2. FUSIBLE DISCONNECTING SWITCHES FOR HVAC UNITS ARE TO BE PROVIDED /INSTALLED BY THE BUILDING CONTACTOR.
3. 480V POWER SUPPLY SYSTEM
   3-PH, 3-W, NEUTRAL POINT OF THE POWER TRANSFORMER IS GROUNDED WITH RESISTOR (27.5-OHM) TO LIMIT GROUNDING FAULT CURRENT TO 10 AMPERE.
4. RATING AMP MARKED WITH ***A TO BE DETERMINED BY BUILDING CONTRACTOR.

REV. NO.	DESCRIPTION	DRAWN	CHECKED	DATE
5				
4				
3				
2				
1				

SHINTECH PLAQUEMINE CA PLANT-4
4BLDG-A901
SWITCHGEAR ROOM
POWER DISTRIBUTION DIAGRAM (1)
SHINTECH

APPROVED BY	Y.KANEKO	DATE	SEP.22'26	SCALE	NONE
CHECKED BY	T.SAGISAKA				
DRAWN BY	R.GOTOH	DWG.NO.	LPA4-79001-60		0

CONFIDENTIAL : SHINTECH, ALL RIGHTS RESERVED. THE DRAWINGS, SPECIFICATIONS AND INFORMATIONS ARE THE PROPERTY OF SHINTECH, AND CONFIDENTIAL.

OCT.02-'26

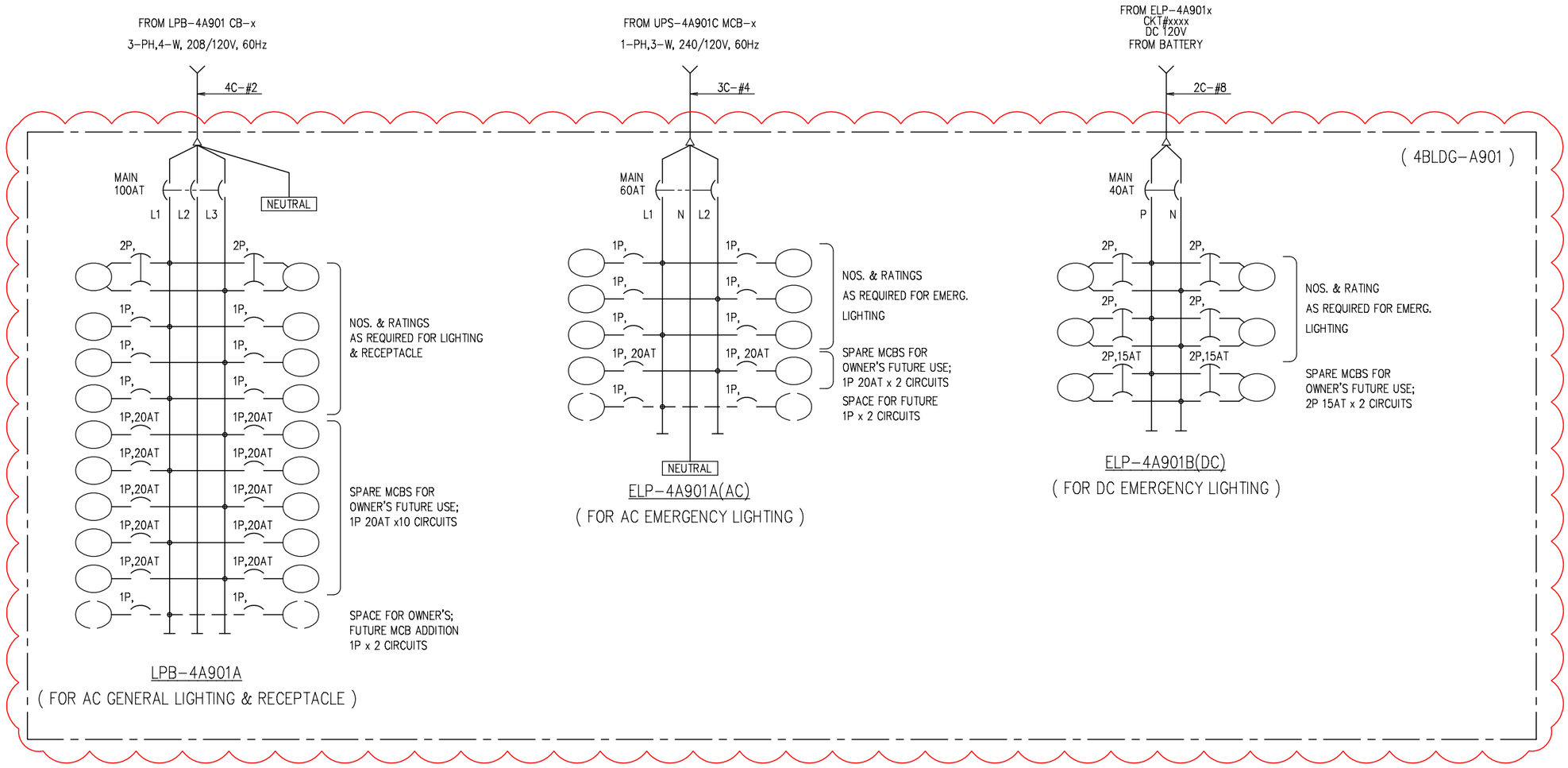

TO BE PROVIDED AND INSTALLED BY BUILDING CONTRACTOR

CERTIFIED FOR
BID
DATE: SEP 22'26
SHINTECH

JOB NO. EA-503
CA4
BUILDING WORK

NOTES

1. OWNER WILL SUPPLY ONE (1) LIGHTING POWER FEEDER EACH TO THE LIGHTING PANELS LPB-4A901A ELP-4A901A(AC) & ELP-4A901B(DC).
   1) POWER SUPPLY WIRING & ITS CONNECTION TO THE PANEL WILL BE DONE BY THE OWNER.
2. GENERAL LIGHTING PANELBOARD LPB-4A901A FOR LIGHTING & RECEP. FOR 4BLDG-A901 ; 3-PH, 4-W, 208Y/120V : TO BE PROVIDED/INSTALLED IN 4BLDG-A901 BY THE BUILDING CONTRACTOR.
   THE BUILDING CONTRACTOR TO INCLUDE FOLLOWING IN THE PANEL FOR OWNER'S FUTURE USE;
   (10) - 1P, 20AMP, MCB CIRCUITS FOR RECEPTACLES
3. AC EMERGENCY LIGHTING PANELBOARD ELP-4A901A FOR 4BLDG-A901 ; 1-PH, 3-W, 240/120V : TO BE PROVIDED/INSTALLED IN 4BLDG-A901 BY THE BUILDING CONTRACTOR.
   THE BUILDING CONTRACTOR TO INCLUDE FOLLOWING IN THE PANEL FOR OWNER'S FUTURE USE;
   (2) - 1P, 20AMP, MCB CIRCUITS FOR LIGHTING
4. DC EMERGENCY LIGHTING PANELBOARD ELP-4A901B FOR 4BLDG-A901 ; 120V DC : TO BE PROVIDED/INSTALLED IN 4BLDG-A901 BY THE CONTRACTOR.
   THE BUILDING CONTRACTOR TO INCLUDE FOLLOWING IN THE PANEL FOR OWNER'S FUTURE USE;
   (2) - 2P, 15AMP, MCB CIRCUITS FOR LIGHTING

REV. NO.	DESCRIPTION	DRAWN	CHECKED	DATE
5				
4				
3				
2				
1				

SHINTECH PLAQUEMINE CA PLANT-4

4BLDG-A901

SWITCHGEAR ROOM

LIGHTING PANELBOARD SCHEDULE

SHINTECH

APPROVED BY		DATE	SEP.22'26	SCALE	NONE
CHECKED BY	Y.KANEKO				
DRAWN BY	T.SAGISAKA R.GOTOH	DWG.NO.	LPA4-79001-62		0

CONFIDENTIAL : SHINTECH, ALL RIGHTS RESERVED. THE DRAWINGS, SPECIFICATIONS AND INFORMATIONS ARE THE PROPERTY OF SHINTECH, AND CONFIDENTIAL.

SEP.22-'26

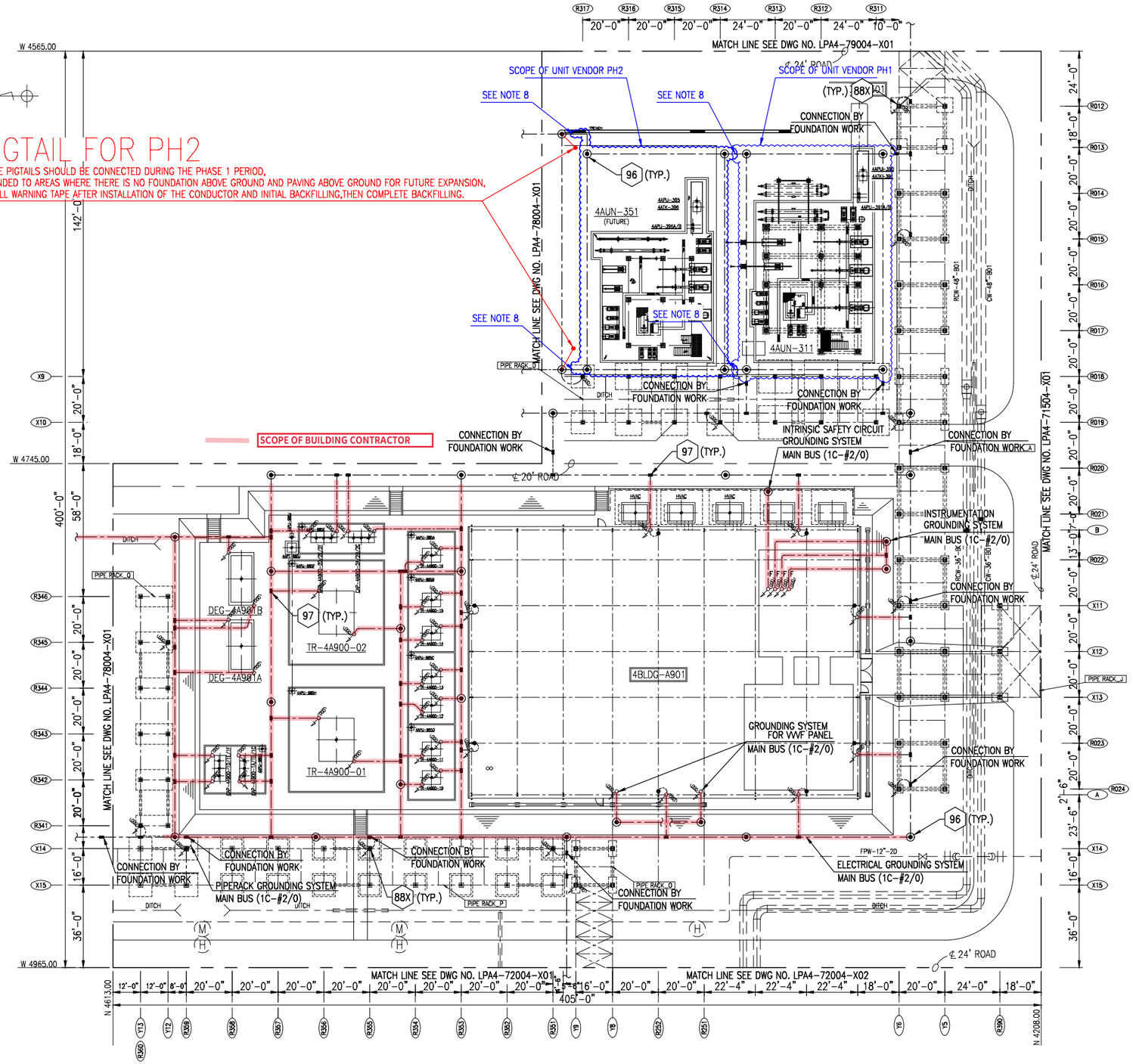

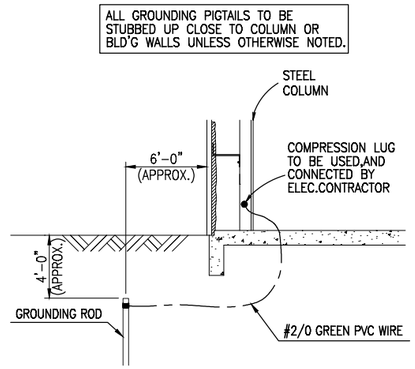

DETAIL ELECTRICAL GROUNDING
(TYP.)

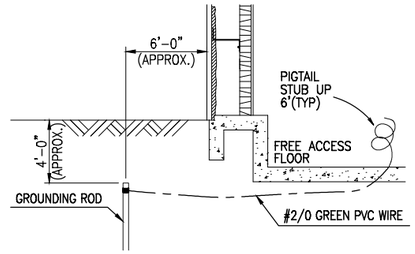

DETAIL INSTR. & INTRINSIC SAFETY CIRCUIT GROUNDING
(TYP.)

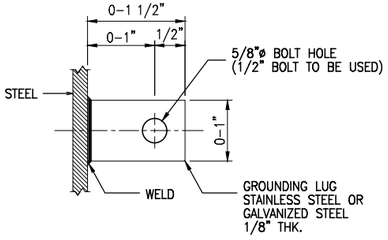

DETAIL OF GROUNDING LUG
(TYP.)

NOTE

1. THE BUILDING CONTRACTOR SHALL PROVIDE ALL MATERIALS, EQUIPMENT, WIRING, ETC. AS REQUIRED FOR THE BUILDING AND OWNER'S FUTURE USE AS DESCRIBED BELOW & AS SHOWN ON THE DRAWINGS.
   1.1 GROUNDING SYSTEM
2. GROUND CONDUCTORS SIZE:
   - MOTORS ABOVE 75HP #2
   - MAIN LATERALS #2/0
   - TOWERS, VESSELS & LARGE MECH. EQUIPMENT #2/0
   - MAJOR EQUIPMENT GROUND (MOTOR CONTROL CENTERS, 4160 VOLT STARTERS, TRANSFORMERS) #2/0
   - LIGHTING AND DISTRIBUTION CABINETS #4
   - MISCELLANEOUS SMALL ITEMS AND SMALL MECHANICAL EQUIPMENT #4
   - PIPERACK SUPPORTS AND BLDG. COLUMNS #2/0
3. ALL UNDERGROUND CONNECTIONS WILL REQUIRE VISUAL INSPECTION AND APPROVAL BY OWNER'S REPRESENTATIVE BEFORE BACKFILLING.
4. GROUND RODS SHALL BE TESTED UTILIZING A GROUND RESISTANCE TESTER.
5. NOTIFY OWNER'S REPRESENTATIVE IF THE RESISTANCE OF EACH GROUND ROD TO EARTH EXCEEDS 5.0 OHMS.
6. INSTALLATION OF GROUNDING RODS, UNDERGROUND WIRING & PIGTAILS SHALL BE DONE BY BUILDING CONTRACTOR.
7. INSTALLATION OF ABOVEGROUND WIRING SHALL BE DONE BY ELECTRICAL SUBCONTRACTOR.
8. GROUNDING WIRE SHALL BE CONNECTED TO EXISTING GROUND ROD BY UNIT VENDOR.

LEGEND

- GROUNDING WIRE CONCEALED IN GRADE OR FLOOR
- GROUNDING WIRE EXPOSED
- GROUNDING PIGTAIL
- GROUNDING PIGTAIL FOR FREE ACCESS FLOOR
- GROUNDING ROD
- BONDED LOCATION
- THERMIT-WELD CONNECTION FOR UNDERGROUND

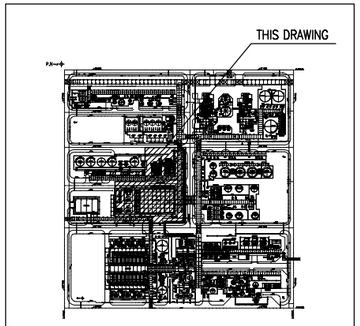

KEYPLAN

0'-0" 25'-0" 50'-0" 75'-0"

GRAPHIC SCALE 0'-1":25'-0"

REF. NO.	REFERENCE DRAWINGS DWG./DOC. NO.	DWG./DOC. TITLE	REV.
1	LPA4-70004-01	GROUNDING DESIGN CONCEPTUAL	0
2	LPA4-70004-X02	GROUNDING SYSTEM LAYOUT (OVERALL KEY PLAN)	0
3	LPA4-70008-31	GROUNDING DETAILS (1)	0
4	LPA4-70008-32	GROUNDING DETAILS (2)	0
5	LPA4-70008-33	GROUNDING DETAILS (3)	0
6	LPA4-72004-X02	200/500/700 AREA GROUNDING SYSTEM LAYOUT (FOUNDATION WORK)	0
7	LPA4-72004-X01	4BLDG-A201 GROUNDING SYSTEM LAYOUT (FOUNDATION WORK)	0
8	LPA4-71504-X01	150 AREA GROUNDING SYSTEM LAYOUT (FOUNDATION WORK)	0
9	LPA4-78004-X01	4BLDG-A902/800 AREA GROUNDING SYSTEM LAYOUT (FOUNDATION WORK)	0
10	LPA4-79004-X01	900 AREA GROUNDING SYSTEM LAYOUT (FOUNDATION WORK)	0

SHINTECH PLAQUEMINE CA PLANT-4

4BLDG-A901/300 AREA

GROUNDING SYSTEM LAYOUT

(FOUNDATION WORK)

SHINTECH

REV. NO.	DESCRIPTION	DRAWN	CHECKED	DATE
0	ISSUE FOR BID (EA-502)	R.GOTOH	T.SAGISAKA	MAY.26.'26

APPROVED BY Y.KANEKO
CHECKED BY T.SAGISAKA
DRAWN BY R.GOTOH

DATE MAY.26.'26 SCALE 1"=25'-0"

DWG. NO. LPA4-79004-X02 0

CONFIDENTIAL : SHINTECH, ALL RIGHTS RESERVED. THE DRAWINGS, SPECIFICATIONS AND INFORMATIONS ARE THE PROPERTY OF SHINTECH, AND CONFIDENTIAL.

JUN.16.'26

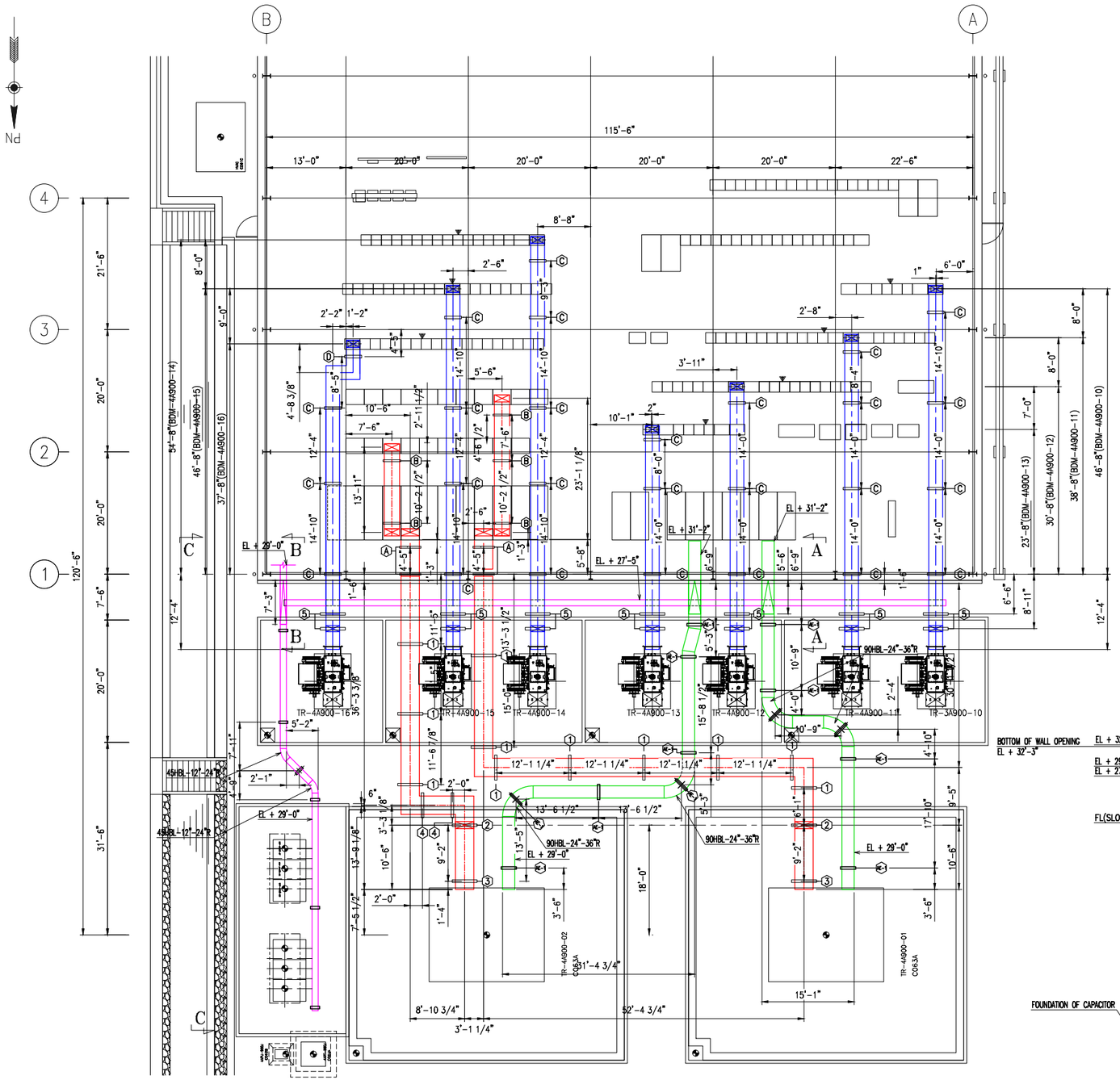

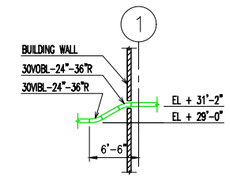

SECTION "A-A"

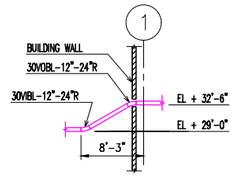

SECTION "B-B"

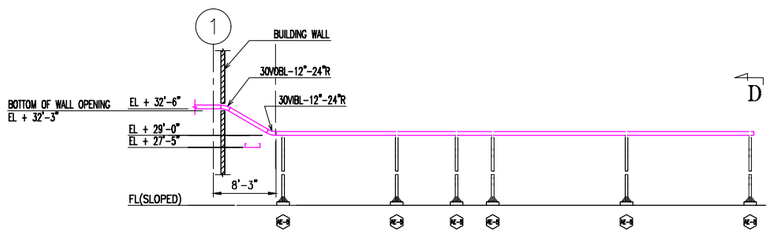

SECTION "C-C"

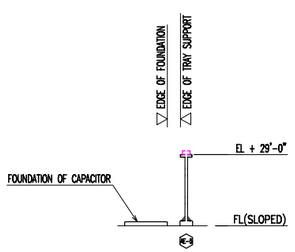

SECTION "D-D"

NOTE

1. MARKS ⚠ DESIGNATE "FRONT SIDE".
2. AS FOR OUTDOOR BUS DUCT SUPPORT,COLUMN SUPPORT AND ITS CONCRETE FOUNDATIONS TO BE PROVIDED AND INSTALLED BY ELECTRICAL CONTRACTOR.
3. AS FOR INDOOR BUS DUCT SUPPORT, C3 x 4.1 STEEL SUPPORT UNDER THE BUS DUCT AND NECESSARY HARDWARE TO ATTACH TO THREADED ROD TO BE PROVIDED BY BUS DUCT VENDOR.OTHER MATERIALS TO BE PROVIDED BY ELECTRICAL CONTRACTOR.
4. THESE DIMENSION TO BE VERIFIED BY PANEL MANUFACTURER AND BUS DUCT VENDOR.
5. BUS DUCT SUPPORT BEAMS INSIDE BUILDING SHALL BE DESIGNED/INSTALLED BY BUILDING CONTRACTOR.
6. DETAIL OF BUS DUCT SUPPORT SHALL BE REFERRED TO LPA4-79009-06, 07 AND 08.
7. BUS DUCT SUPPORT LOCATION IS NOT NECESSARY TO MATCH THIS DRAWING, BUT EACH BUS DUCT SUPPORT SPAN SHALL BE LESS THAN 15 FEET AND WITHIN 4 FEET OF ELBOW.
8. CABLE TRAY SUPPORT ⬡⬡ SHALL BE REFERRED TO LPA4-70014-16.

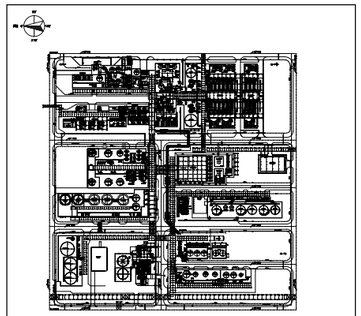

KEYPLAN

0'-0" 10'-0" 20'-0" 30'-0"

GRAPHIC SCALE 0'-1"=10'-0"

REF. NO.	REFERENCE DRAWINGS DWG./DOC. NO.	DWG./DOC. TITLE	REV.
1	LPA4-79009-06	4BLDG-A901 BUS DUCT ARRANGEMENT (DETAIL & SECTION VIEW -1)	0
2	LPA4-79009-07	4BLDG-A901 BUS DUCT ARRANGEMENT (DETAIL & SECTION VIEW -2)	0
3	LPA4-79009-08	4BLDG-A901 BUS DUCT ARRANGEMENT (DETAIL & SECTION VIEW -3)	0
4	LPA4-70014-16	TYPICAL DETAIL FOR CABLE TRAY SYSTEM INSTALLATION-6	2

CERTIFIED FOR BID
DATE: SEP 22'26
SHINTECH

JOB NO. EA-503
CA4
BUILDING WORK

SHINTECH PLAQUEMINE CA PLANT-4
EQUIPMENT LAYOUT FOR
4BLDG-A901
BUS DUCT ARRANGEMENT

SHINTECH

REV. NO.	DESCRIPTION	DRAWN	CHECKED	DATE
△				
△				
△				
△				
△				

APPROVED BY	Y.KANEKO	DATE	SEP.02.'26
CHECKED BY	T.SAGISAKA	SCALE	1"=10'-0"
DRAWN BY	R.GOTOH	DWG. NO.	LPA4-79009-05 △0

CONFIDENTIAL : SHINTECH, ALL RIGHTS RESERVED. THE DRAWINGS, SPECIFICATIONS AND INFORMATIONS ARE THE PROPERTY OF SHINTECH, AND CONFIDENTIAL.

SEP.19.'26

PN

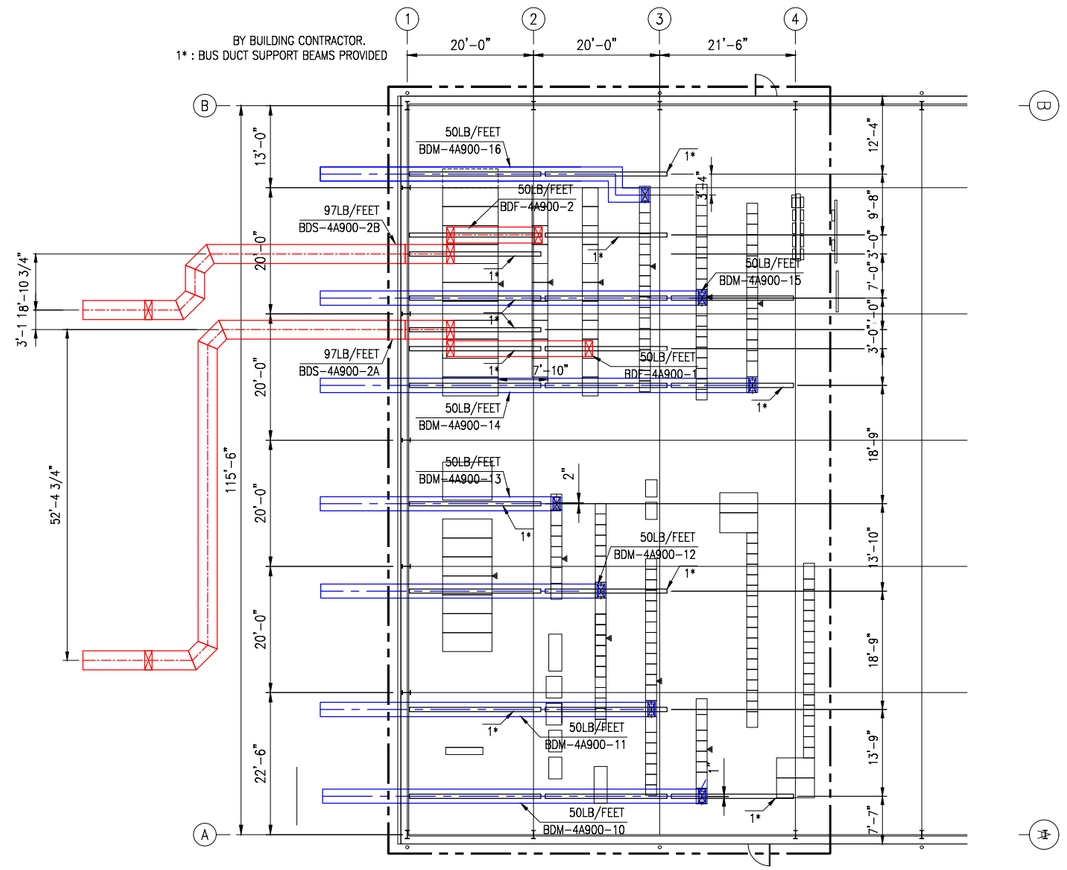

DETAIL FOR BUS DUCT SUPPORT BEAM
SCALE 0'-1":10'-0"

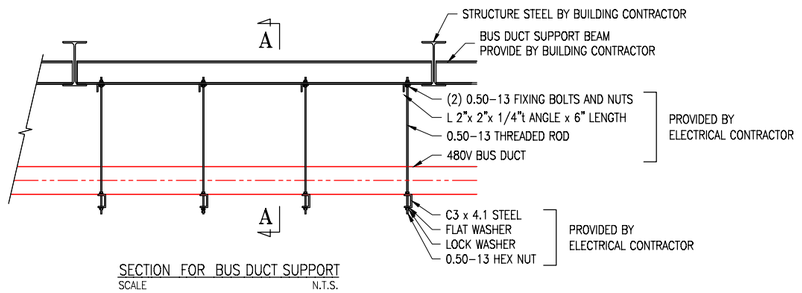

SECTION FOR BUS DUCT SUPPORT
SCALE N.T.S.

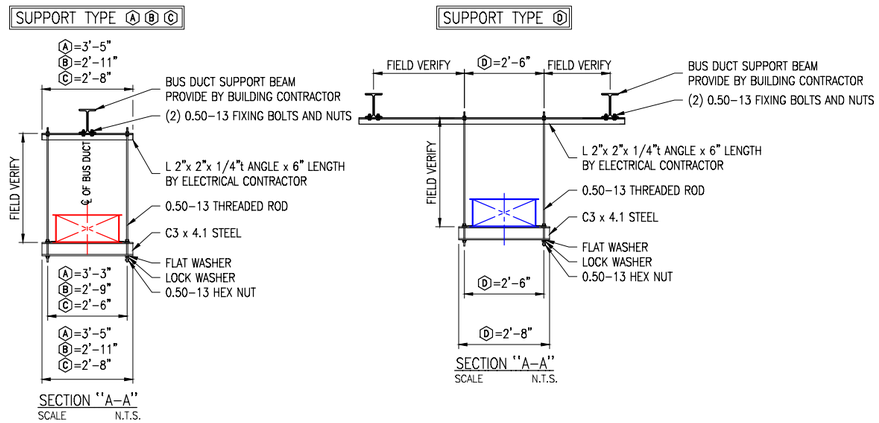

SECTION "A-A"
SCALE N.T.S.

SECTION "A-A"
SCALE N.T.S.

NOTE

1. AS FOR OUTDOOR BUS DUCT SUPPORT, COLUMN SUPPORT AND ITS CONCRETE FOUNDATIONS TO BE PROVIDED AND INSTALLED BY ELECTRICAL CONTRACTOR.
2. AS FOR INDOOR BUS DUCT SUPPORT, C3 x 4.1 STEEL SUPPORT UNDER THE BUS DUCT AND NECESSARY HARDWARE TO ATTACH TO THREADED ROD TO BE PROVIDED BY BUS DUCT VENDOR.
   OTHER MATERIALS TO BE PROVIDED BY ELECTRICAL CONTRACTOR.
3. THESE DIMENSION TO BE VERIFIED BY PANEL MANUFACTURER AND BUS DUCT VENDOR.
4. BUS DUCT SUPPORT BEAMS INSIDE BUILDING SHALL BE DESIGNED/INSTALLED BY BUILDING CONTRACTOR.
5. MARKS ⚠ DESIGNATE "FRONT SIDE".

0'-0" 12'-0" 24'-0" 36'-0"
GRAPHIC SCALE 0'-1"=12'-0"

REF. NO.	REFERENCE DRAWINGS		REV.
	DWG./DOC. NO.	DWG./DOC. TITLE	
1	LPA4-79009-05	4BLDG-A901 BUS DUCT ARRANGEMENT	0
2	LPA4-79009-07	4BLDG-A901 BUS DUCT ARRANGEMENT	0
		(DETAIL & SECTION VIEW -2)	
3	LPA4-79009-08	4BLDG-A901 BUS DUCT ARRANGEMENT	2
		(DETAIL & SECTION VIEW -3)	

CERTIFIED FOR BID
DATE: SEP 22'26
SHINTECH

JOB NO. EA-503
CA4
BUILDING WORK

REV. NO.	DESCRIPTION	DRAWN	CHECKED	DATE
△				
△				
△				
△				

SHINTECH PLAQUEMINE CA PLANT-4

4BLDG-A901 SWITCHGEAR ROOM

BUS DUCT ARRANGEMENT
(DETAIL & SECTION VIEW -1)

APPROVED BY SHINTECH

APPROVED BY	Y.KANEKO	DATE	SEP.04.'26
CHECKED BY	T.SAGISAKA	SCALE	1"=12'-0"
DRAWN BY	R.GOTOH	DWG. NO.	LPA4-79009-06 △0

CONFIDENTIAL : SHINTECH, ALL RIGHTS RESERVED. THE DRAWINGS, SPECIFICATIONS AND INFORMATIONS ARE THE PROPERTY OF SHINTECH, AND CONFIDENTIAL.

SEP.19.'26

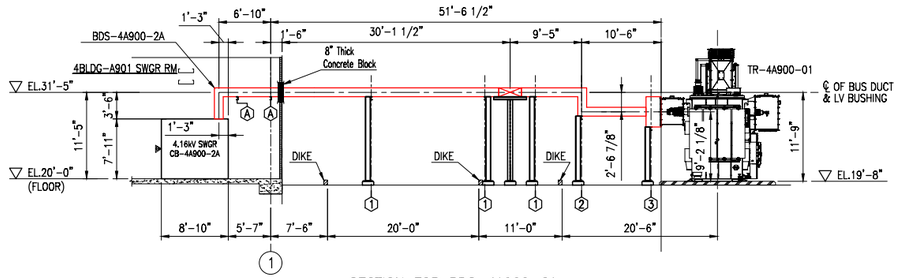

SECTION FOR BDS-4A900-2A
SCALE 0'-1"=10'-0"

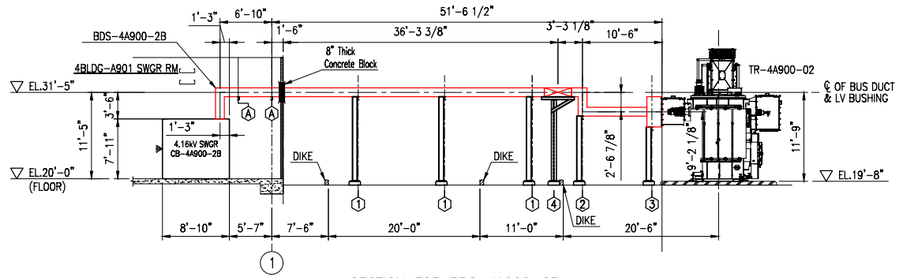

SECTION FOR BDS-4A900-2B
SCALE 0'-1"=10'-0"

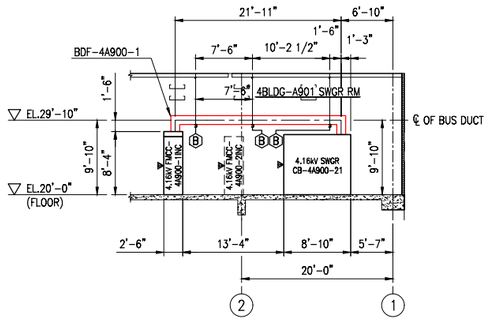

SECTION FOR BDF-4A900-1
SCALE 0'-1"=10'-0"

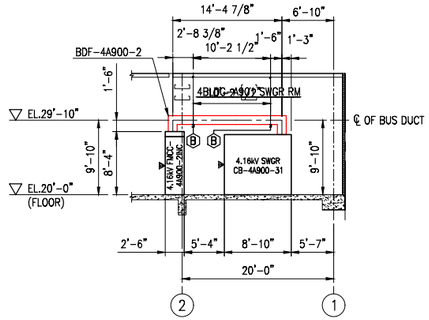

SECTION FOR BDF-4A900-2
SCALE 0'-1"=10'-0"

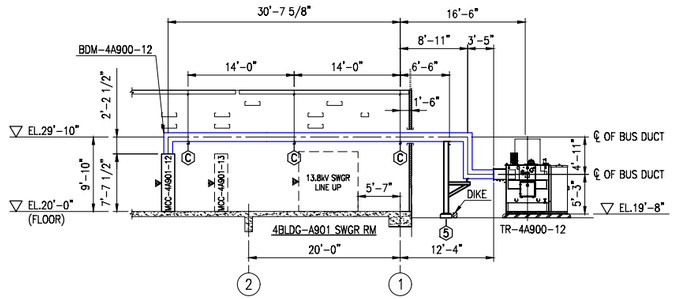

SECTION FOR BDM-4A900-12
SCALE 0'-1"=10'-0"

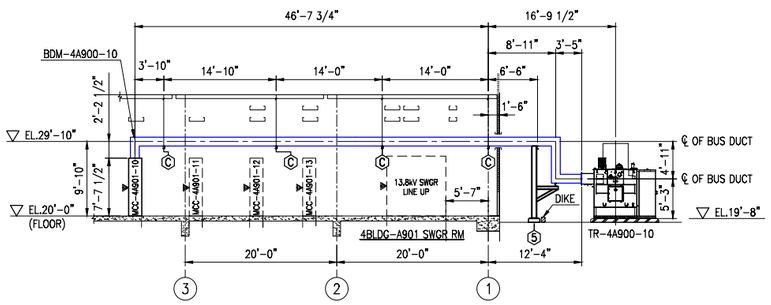

SECTION FOR BDM-4A900-10
SCALE 0'-1"=10'-0"

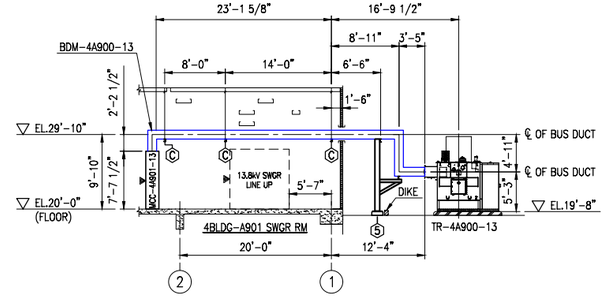

SECTION FOR BDM-4A900-13
SCALE 0'-1"=10'-0"

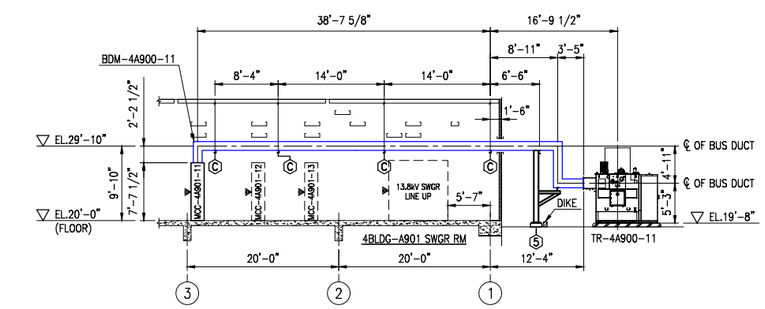

SECTION FOR BDM-4A900-11
SCALE 0'-1"=10'-0"

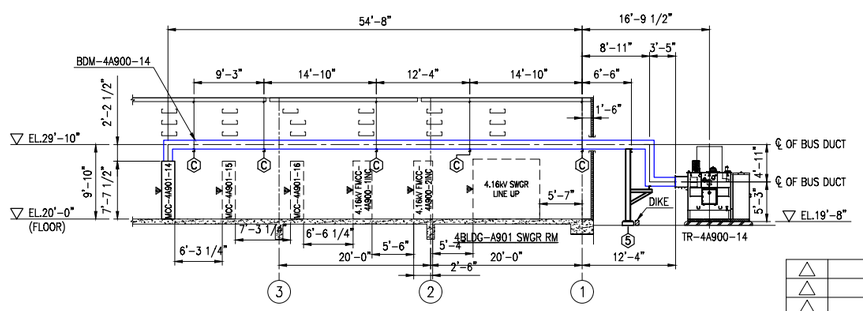

SECTION FOR BDM-4A900-14
SCALE 0'-1"=10'-0"

NOTE

1. MARKS ⚠ DESIGNATE "FRONT SIDE".
2. AS FOR OUTDOOR BUS DUCT SUPPORT, COLUMN SUPPORT AND ITS CONCRETE FOUNDATIONS TO BE PROVIDED AND INSTALLED BY ELECTRICAL CONTRACTOR.
3. AS FOR INDOOR BUS DUCT SUPPORT, C3 x 4.1 STEEL SUPPORT UNDER THE BUS DUCT AND NECESSARY HARDWARE TO ATTACH TO THREADED ROD TO BE PROVIDED BY BUS DUCT VENDOR. OTHER MATERIALS TO BE PROVIDED BY ELECTRICAL CONTRACTOR.
4. THESE DIMENSION TO BE VERIFIED BY PANEL MANUFACTURER AND BUS DUCT VENDOR.
5. BUS DUCT SUPPORT BEAMS SHALL BE DESIGNED/INSTALLED BY BUILDING CONTRACTOR.

0'-0" 10'-0" 20'-0" 30'-0"
GRAPHIC SCALE 0'-1"=10'-0"

REF. NO.	REFERENCE DRAWINGS		REV.
	DWG./DOC. NO.	DWG./DOC. TITLE	
1	LPM-79009-05	4BLDG-A901 BUS DUCT ARRANGEMENT	0
2	LPM-79009-06	4BLDG-A901 BUS DUCT ARRANGEMENT (DETAIL & SECTION VIEW -1)	0
3	LPM-79009-08	4BLDG-A901 BUS DUCT ARRANGEMENT (DETAIL & SECTION VIEW -3)	0

CERTIFIED FOR BID
DATE: SEP 22'26
SHINTECH

JOB NO. EA-503
CA4
BUILDING WORK

SHINTECH PLAQUEMINE CA PLANT-4
4BLDG-A901 SWITCHGEAR ROOM
BUS DUCT ARRANGEMENT
(DETAIL & SECTION VIEW -2)

SHINTECH

REV. NO.	DESCRIPTION	DRAWN	CHECKED	DATE
△				
△				
△				
△				
△				

APPROVED BY	Y.KANEKO	DATE	SEP.17.26
CHECKED BY	T.SAGISAKA	SCALE	1"=10'-0"
DRAWN BY	R.GOTOH	DWG. NO.	LPA4-79009-07 △0

CONFIDENTIAL : SHINTECH, ALL RIGHTS RESERVED. THE DRAWINGS, SPECIFICATIONS AND INFORMATIONS ARE THE PROPERTY OF SHINTECH, AND CONFIDENTIAL.

SEP.19.'26

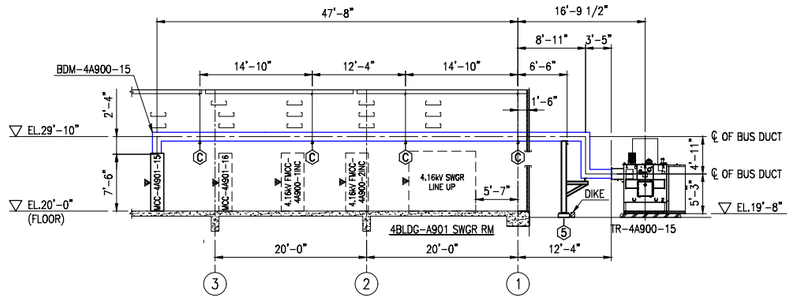

SECTION FOR BDM-4A900-15
SCALE 0'-1"=10'-0"

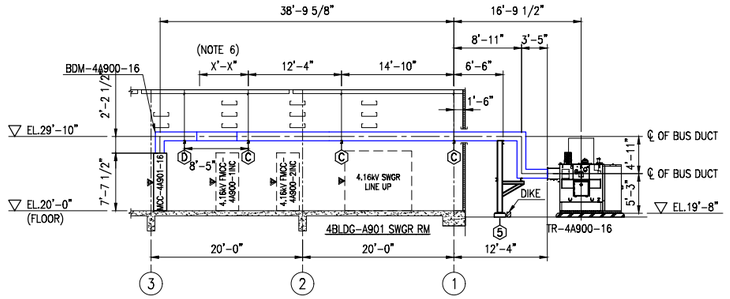

SECTION FOR BDM-4A900-16
SCALE 0'-1"=10'-0"

SUPPORT TYPE ①②③

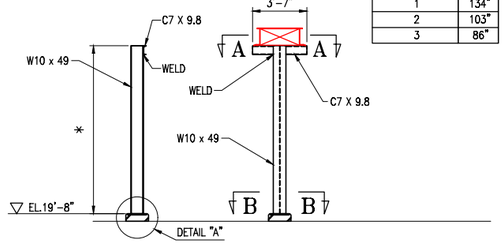

SUPPORT TYPE	*
1	134"
2	103"
3	86"

BUS SUPPORT DETAIL/OUTDOOR
SCALE N.T.S.

SUPPORT TYPE ④

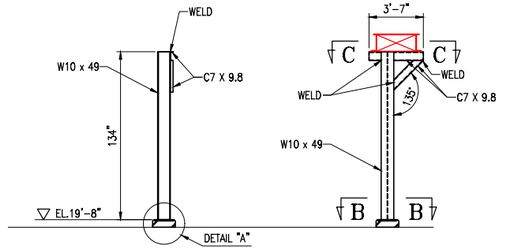

BUS SUPPORT DETAIL/OUTDOOR
SCALE N.T.S.

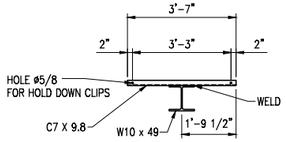

SECTION "A-A"
SCALE N.T.S.

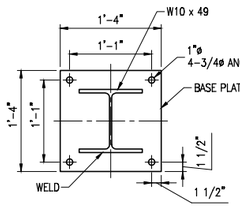

SECTION "B-B"
SCALE N.T.S.

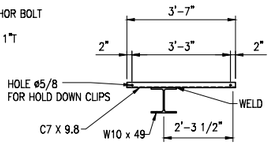

SECTION "C-C"
SCALE N.T.S.

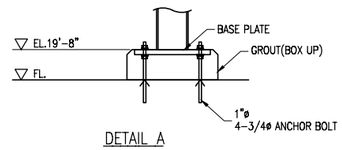

DETAIL A
SCALE N.T.S.

SUPPORT TYPE ⑤

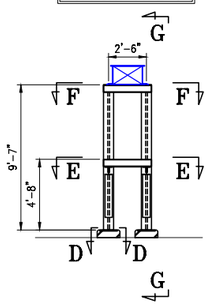

BUS SUPPORT DETAIL/OUTDOOR
SCALE N.T.S.

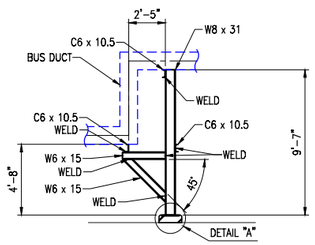

SECTION "G-G"
SCALE N.T.S.

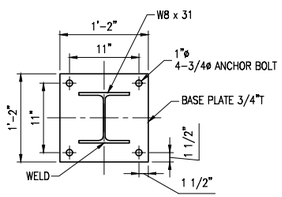

SECTION "D-D"
SCALE N.T.S.

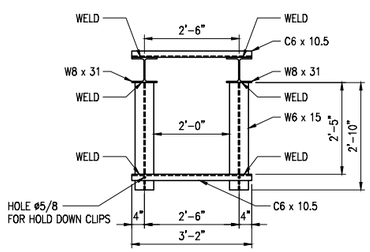

SECTION "E-E"
SCALE N.T.S.

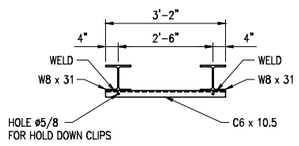

SECTION "F-F"
SCALE N.T.S.

NOTE

1. MARKS ⚠ DESIGNATE "FRONT SIDE".
2. AS FOR OUTDOOR BUS DUCT SUPPORT, COLUMN SUPPORT AND ITS CONCRETE FOUNDATIONS TO BE PROVIDED AND INSTALLED BY ELECTRICAL CONTRACTOR.
3. AS FOR INDOOR BUS DUCT SUPPORT, C3 x 4.1 STEEL SUPPORT UNDER THE BUS DUCT AND NECESSARY HARDWARE TO ATTACH TO THREADED ROD TO BE PROVIDED BY BUS DUCT VENDOR.OTHER MATERIALS TO BE PROVIDED BY ELECTRICAL CONTRACTOR.
4. THESE DIMENSION TO BE VERIFIED BY PANEL MANUFACTURER AND BUS DUCT VENDOR.
5. BUS DUCT SUPPORT BEAMS INSIDE BUILDING SHALL BE DESIGNED/INSTALLED BY BUILDING CONTRACTOR.
6. THE DETAIL OF BDM-3A900-16 HORIZONTAL ELBOW AND SUPPORT LOCATION SHALL BE DESIGNED BY BUS DUCT VENDOR.

0'-0" 10'-0" 20'-0" 30'-0"
GRAPHIC SCALE 0'-1"=10'-0"

REF. NO.	REFERENCE DRAWINGS		REV.
	DWG./DOC. NO.	DWG./DOC. TITLE	
1	LPA4-79009-05	4BLDG-A901 BUS DUCT ARRANGEMENT	2
2	LPA4-79009-06	4BLDG-A901 BUS DUCT ARRANGEMENT (DETAIL & SECTION VIEW -1)	2
3	LPA4-79009-07	4BLDG-A901 BUS DUCT ARRANGEMENT (DETAIL & SECTION VIEW -2)	2

CERTIFIED FOR BID
DATE: SEP 22'26
SHINTECH

JOB NO. EA-503
CA4
BUILDING WORK

SHINTECH PLAQUEMINE CA PLANT-4
4BLDG-A901 SWITCHGEAR ROOM
BUS DUCT ARRANGEMENT
(DETAIL & SECTION VIEW -3)

SHINTECH

APPROVED BY	Y.KANEKO	DATE	SEP.17.'26	SCALE	1"=10'-0"
CHECKED BY	T.SAGISAKA	DWG. NO.	LPA4-79009-08		⚠0
DRAWN BY	R.GOTOH				

REV. NO.	DESCRIPTION	DRAWN	CHECKED	DATE
⚠				
⚠				
⚠				
⚠				
⚠				

CONFIDENTIAL : SHINTECH, ALL RIGHTS RESERVED. THE DRAWINGS, SPECIFICATIONS AND INFORMATIONS ARE THE PROPERTY OF SHINTECH, AND CONFIDENTIAL.

SEP.19.'26

PN

SEE DETAIL "d"
DWG. NO. LPA4-79009-14

SEE DETAIL "b"
DWG. NO. LPA4-79009-14

SEE DETAIL "e"
DWG. NO. LPA4-79009-14

SEE DETAIL "f"
DWG. NO. LPA4-79009-14

SEE DETAIL "a"
DWG. NO. LPA4-79009-14

SEE DETAIL "c"
DWG. NO. LPA4-79009-14

SEE DETAIL "d"
DWG. NO. LPA4-79009-14

92'-4"
20'-0"
5'-0" 11'-4" 5'-0" 11'-4" 4'-6" 38'-0"

115'-6"
28'-4"
1'-0"
28'-4"
29'-6"
4'-0"
11'-4"
5'-0"
10"

2'-6"
3"
5'-0"
5'-0"
7'-6"
13'-6"
13'-1"
13'-8"
22'-6"
18'-10"
22'-6"
13'-1"
10'-6"
7'-5"
22'-6"
18'-10"
13'-1"
1'-6"

CAP-4A900 -2A, 2B, 2C
CAP-4A900 -2D, 2E, 2F
4APU-980J
4APT-980J
8"
10"
10"

DEG-4A901B
DEG-4A901A C060A
DEG-4A901A
DEG-4A901B C060A

NGR-4A900-022
SUBMERSIBLE PUMP
TR-4A900-02
C063A TR-4A900-02
4"Cx2
(EL.13'-10 13/16")
NGR-4A900-021
SUBMERSIBLE PUMP
NGR-4A900-011
TR-4A900-01
4"Cx2
(EL.13'-10 13/16")
TR-4A900-01
C063A
NGR-4A900-011

CAP-4A900 -1D, 1E, 1F
CAP-4A900 -1A, 1B, 1C
10"
8"
8"

7'-10"
10'-10"
6'-0"
6"
19'-8"
6'-0"
7'-10"
13'-10"
6'-0"
18'-9"
6'-0"
13'-10"
6'-0"
18'-9"
13'-9"
7'-9"
6'-0"
6'-1"

TR-4A900-16
4"Cx1
(EL.13'-4 13/16")
TR-4A900-15
TR-4A900-14
TR-4A900-13
4"Cx3
(EL.13'-4 13/16")
TR-4A900-12
TR-4A900-11
TR-4A900-10

7" 11"
14'-6"
5'-0"
4"Cx3
(EL.13'-4 13/16")
24'-0"
5'-7"
8'-10"
7" 11"
5'-0"
4A900-2
4.16kV SWITCHGEAR
5'-7"
7'-10"
115'-6"
4A900-1
13.8kV SWITCHGEAR
9'-6"
STORAGE ROOM
1'-0"
3'-0"
4'-7"
13'-0"
13'-8"

5'-0" 6'-0" 5'-0" 6'-5" 9'-6" 12'-10" 15'-4" 12'-10" 11'-0" 5'-6" 9'-0" 5'-6" 7'-6" 12'-0"

79009-16 C
79009-15 A
79009-15 B
79009-16 D
79009-15 A

NOTE

1. ALL DIMENSIONS SHALL BE MEASURED FROM THE DATUM POINT.
2. THE ELEVATION OF EMBEDDED CONDUIT SHALL BE SHOWN IN THE DWG. NO. LPA4-79009-15~16.

LEGEND

——— FOUNDATION OF EQUIPMENT
- - - - - UNDERGROUND CONDUIT
○ STUB-UP POINT

THIS DRAWING

KEYPLAN

0'-0" 8'-0" 16'-0" 24'-0"
GRAPHIC SCALE 0'-1"=8'-0"

REF. NO.	REFERENCE DRAWINGS		REV.
	DWG./DOC. NO.	DWG./DOC. TITLE	
1	LPM-79009-14	CIVIL INFORMATION FOR 4BLDG-A901 SWITCHGEAR ROOM	4
		NORTH SIDE (DETAIL AND SECTION VIEW-1)	
2	LPM-79009-15	CIVIL INFORMATION FOR 4BLDG-A901 SWITCHGEAR ROOM	5
		NORTH SIDE (DETAIL AND SECTION VIEW-2)	
3	LPM-79009-16	CIVIL INFORMATION FOR 4BLDG-A901 SWITCHGEAR ROOM	4
		NORTH SIDE (DETAIL AND SECTION VIEW-3)	

CERTIFIED FOR BID
DATE: SEP 16'26
SHINTECH

JOB NO. EA-503
CA4
BUILDING WORK

SHINTECH PLAQUEMINE CA PLANT-4
CIVIL INFORMATION FOR 4BLDG-A901 SWITCHGEAR ROOM NORTH SIDE

SHINTECH

APPROVED BY	Y.KANEKO	DATE	AUG.26.'26	SCALE	1"=8'-0"
CHECKED BY	T.SAGISAKA	DWG. NO.	LPA4-79009-13		0
DRAWN BY	R.GOTOH				

REV. NO.	DESCRIPTION	DRAWN	CHECKED	DATE
0				

CONFIDENTIAL : SHINTECH, ALL RIGHTS RESERVED. THE DRAWINGS, SPECIFICATIONS AND INFORMATIONS ARE THE PROPERTY OF SHINTECH, AND CONFIDENTIAL.

SEP.15.'26

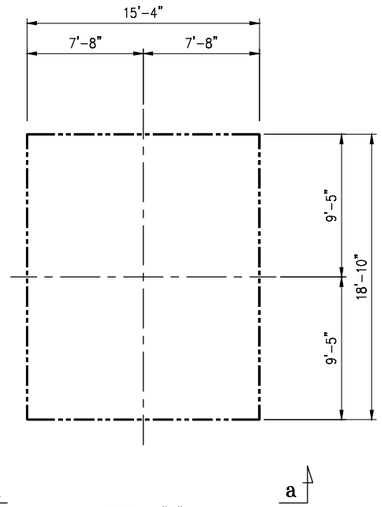

DETAIL "a"
FOUNDATION OF TRANSFORMER
TR-4A900-01, TR-4A900-02
SCALE 0'-1"=5'-0"

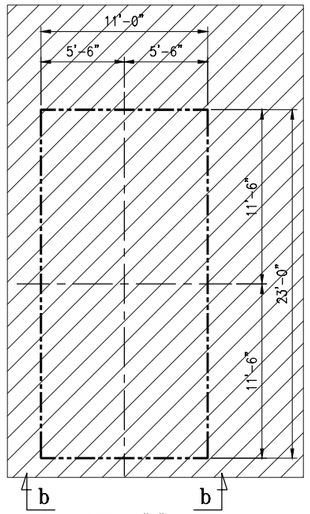

DETAIL "b"
FOUNDATION OF GENERATOR (DEG)
DEG-4A901A, DEG-4A901B
SCALE 0'-1"=5'-0"

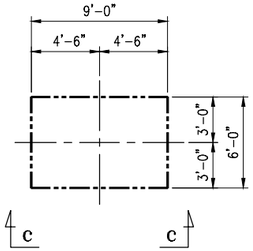

DETAIL"c"
FOUNDATION OF TRANSFORMER
TR-4A900-10, TR-4A900-11, TR-4A900-12
TR-4A900-13, TR-4A900-14, TR-4A900-15
TR-4A900-16
SCALE 0'-1"=5'-0"

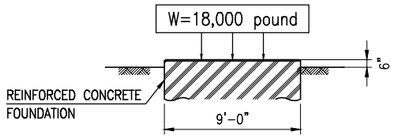

SECTION ''c-c''
SCALE 0'-1"=5'-0"

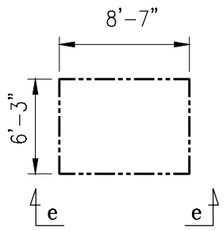

DETAIL"e"
FOUNDATION OF NGR
NGR-4A900-012, NGR-4A900-022
SCALE 0'-1"=5'-0"

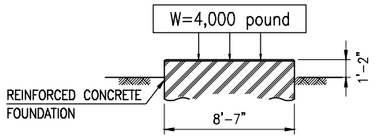

SECTION ''e-e''
SCALE 0'-1"=5'-0"

DETAIL"d"
FOUNDATION OF CAPACITOR
CAP-4A900-1A,1B,1C
CAP-4A900-1D,1E,1F
CAP-4A900-2A,2B,2C
CAP-4A900-2D,2E,2F
SCALE 0'-1"=5'-0"

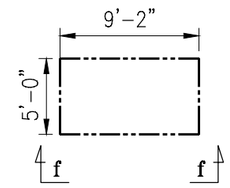

DETAIL"f"
FOUNDATION OF NGR
NGR-4A900-011, NGR-4A900-021
SCALE 0'-1"=5'-0"

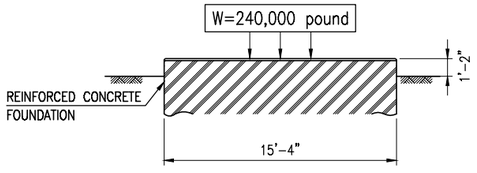

SECTION ''a-a''
SCALE 0'-1"=5'-0"

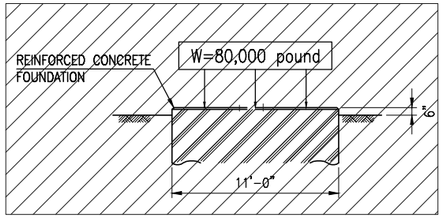

SECTION ''b-b''
SCALE 0'-1"=5'-0"

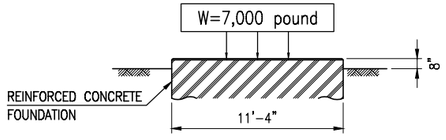

SECTION ''d-d''
SCALE 0'-1"=5'-0"

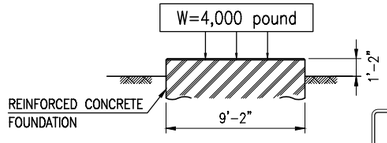

SECTION ''f-f''
SCALE 0'-1"=5'-0"

NOTE

1. ALL DIMENSIONS SHALL BE MEASURED FROM THE DATUM POINT.

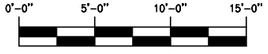

GRAPHIC SCALE 0'-1"=5'-0"

REF. NO.	REFERENCE DRAWINGS		REV.
	DWG./DOC. NO.	DWG./DOC. TITLE	
1	LPM-79009-13	CIVIL INFORMATION FOR 4BLDG-A901 SWITCHGEAR ROOM NORTH SIDE	1

CERTIFIED FOR BID
DATE: SEP 16'26
SHINTECH

JOB NO. EA-503
CA4
BUILDING WORK

REV. NO.	DESCRIPTION	DRAWN	CHECKED	DATE
△				
△				
△				
△				

SHINTECH PLAQUEMINE CA PLANT-4
CIVIL INFORMATION FOR
4BLDG-A901 SWITCHGEAR ROOM
NORTH SIDE (DETAIL AND SECTION VIEW-1)

SHINTECH

APPROVED BY Y.KANEKO	DATE	AUG.24.'26	SCALE 1"=5'-0"
CHECKED BY T.SAGISAKA	DWG. NO.	LPA4-79009-14	△0
DRAWN BY R.GOTOH			

CONFIDENTIAL : SHINTECH, ALL RIGHTS RESERVED. THE DRAWINGS, SPECIFICATIONS AND INFORMATIONS ARE THE PROPERTY OF SHINTECH, AND CONFIDENTIAL.

AUG.24.'26

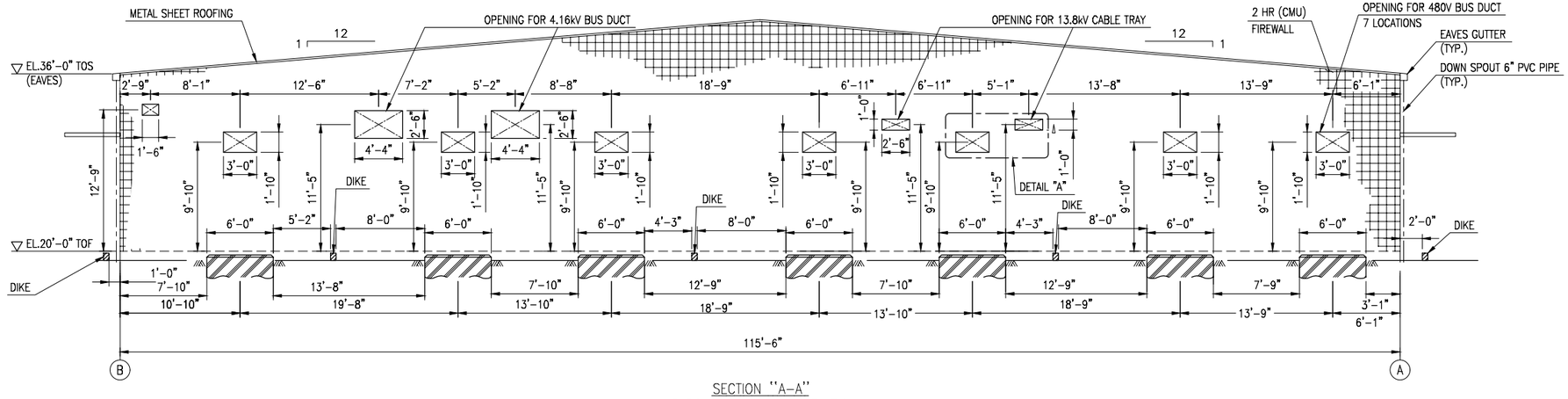

SECTION "A-A"
4BLDG-A901 NORTH ELEVATION
SCALE 0'-1"=6'-0"

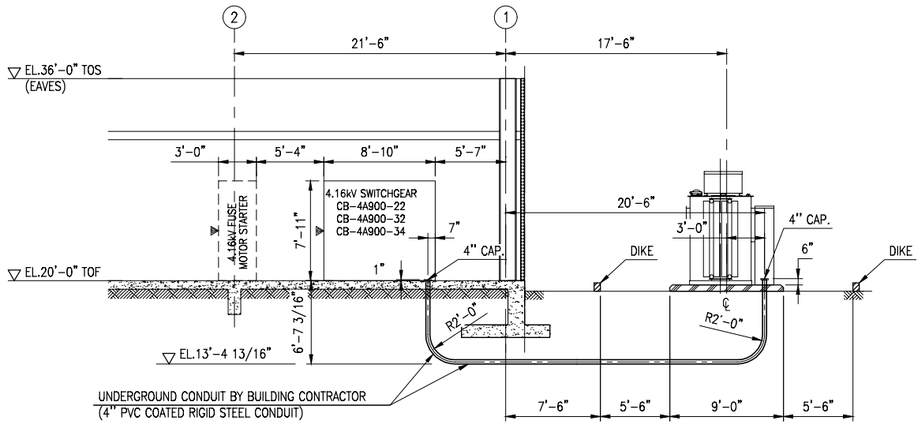

SECTION "B-B"
FOR TR-4A900-12, TR-4A900-14, TR-4A900-16
SCALE 0'-1"=6'-0"

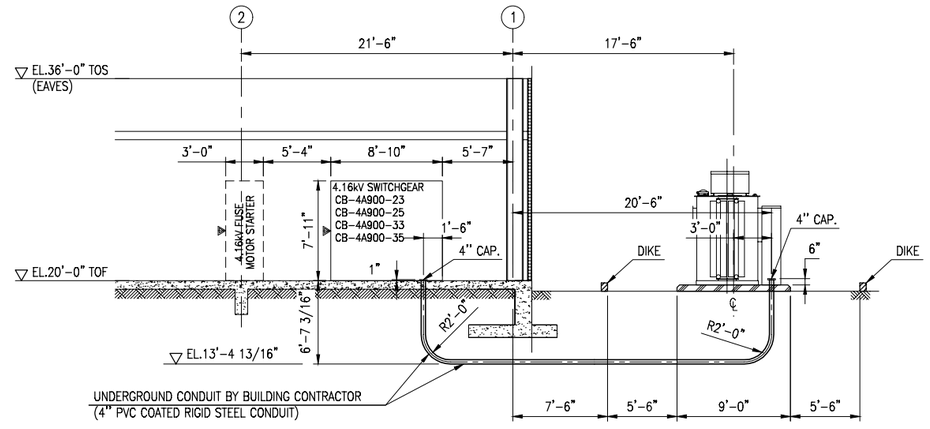

SECTION "B-B"
FOR TR-4A900-10, TR-4A900-11, TR-4A900-13, TR-4A900-15
SCALE 0'-1"=6'-0"

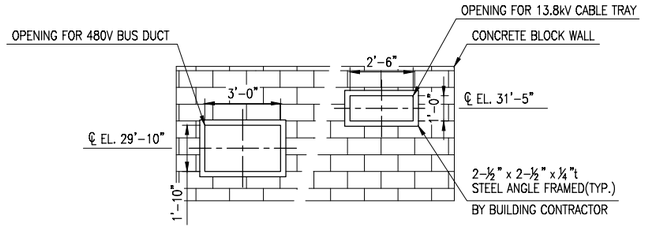

DETAIL "A"
OPENING OF CONCRETE BLOCK WALL
FOR CABLE TRAY AND BUS DUCT ENTRY (TYP.)
SCALE N.T.S.

NOTE

1. ALL DIMENSIONS SHALL BE MEASURED FROM THE DATUM POINT.

0'-0" 6'-0" 12'-0" 18'-0"
GRAPHIC SCALE 0'-1"=6'-0"

REF. NO.	REFERENCE DRAWINGS		REV.
	DWG./DOC. NO.	DWG./DOC. TITLE	
1	LPM-79009-13	CIVIL INFORMATION FOR 4BLDG-A901 SWITCHGEAR ROOM NORTH SIDE	1

CERTIFIED FOR BID
DATE: SEP 16'26
SHINTECH

JOB NO. EA-503
CA4
BUILDING WORK

REV. NO.	DESCRIPTION	DRAWN	CHECKED	DATE
△				
△				
△				
△				
1				

SHINTECH PLAQUEMINE CA PLANT-4
CIVIL INFORMATION FOR
4BLDG-A901 SWITCHGEAR ROOM
NORTH SIDE (DETAIL AND SECTION VIEW-2)

SHINTECH

APPROVED BY Y.KANEKO	DATE	SEP.15.'26	SCALE 1"=6'-0"
CHECKED BY T.SAGISAKA	DWG. NO.	LPA4-79009-15	0
DRAWN BY R.GOTOH			

CONFIDENTIAL : SHINTECH, ALL RIGHTS RESERVED. THE DRAWINGS, SPECIFICATIONS AND INFORMATIONS ARE THE PROPERTY OF SHINTECH, AND CONFIDENTIAL.

SEP.15.'26

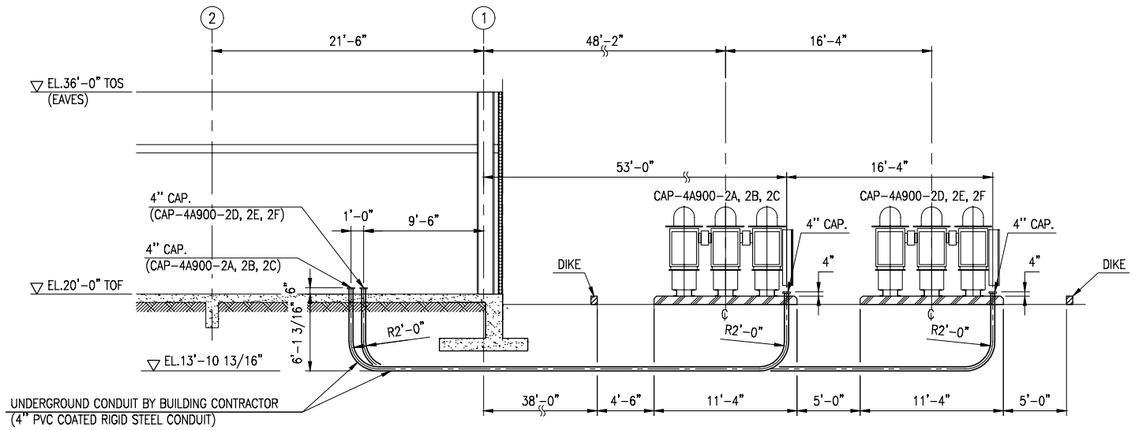

SECTION "C-C"
FOR CAP-4A900-2A/2B/2C, CAP-4A900-2D/2E/2F
SCALE 0'-1"=6'-0"

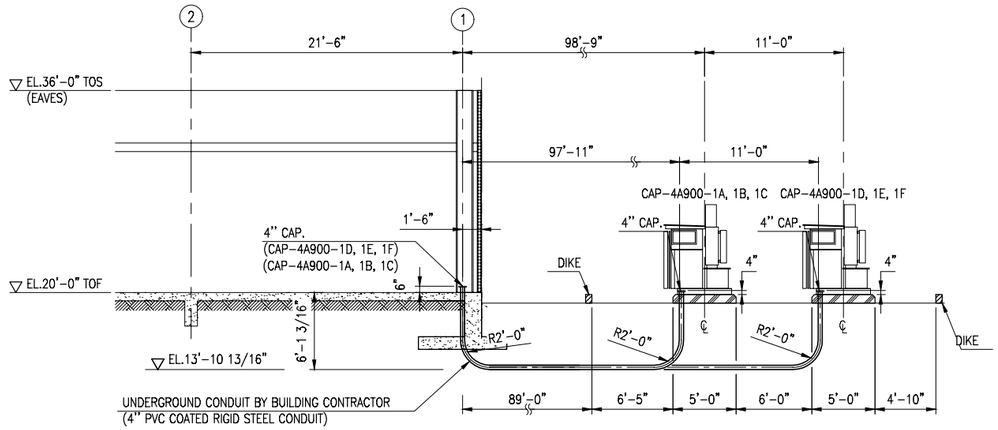

SECTION "D-D"
FOR CAP-4A900-1A/1B/1C, CAP-4A900-1D/1E/1F
SCALE 0'-1"=6'-0"

NOTE

1. ALL DIMENSIONS SHALL BE MEASURED FROM THE DATUM POINT.

0'-0" 6'-0" 12'-0" 18'-0"

GRAPHIC SCALE 0'-1"=6'-0"

REF. NO.	REFERENCE DRAWINGS		REV.
	DWG./DOC. NO.	DWG./DOC. TITLE	
1	LPA4-79009-13	CIVIL INFORMATION FOR 4BLDG-A901 SWITCHGEAR ROOM NORTH SIDE	1

CERTIFIED FOR BID
DATE: SEP 16'26
SHINTECH

JOB NO. EA-503
CA4
BUILDING WORK

SHINTECH PLAQUEMINE CA PLANT-4

CIVIL INFORMATION FOR 4BLDG-A901 SWITCHGEAR ROOM NORTH SIDE (DETAIL AND SECTION VIEW-3)

SHINTECH

REV. NO.	DESCRIPTION	DRAWN	CHECKED	DATE
△				
△				
△				
△				

APPROVED BY	Y.KANEKO	DATE	AUG.21.'26
CHECKED BY	T.SAGISAKA	SCALE	1"=6'-0"
DRAWN BY	R.GOTOH	DWG. NO.	LPA4-79009-16 △0

CONFIDENTIAL : SHINTECH, ALL RIGHTS RESERVED. THE DRAWINGS, SPECIFICATIONS AND INFORMATIONS ARE THE PROPERTY OF SHINTECH, AND CONFIDENTIAL.

AUG.21.'26

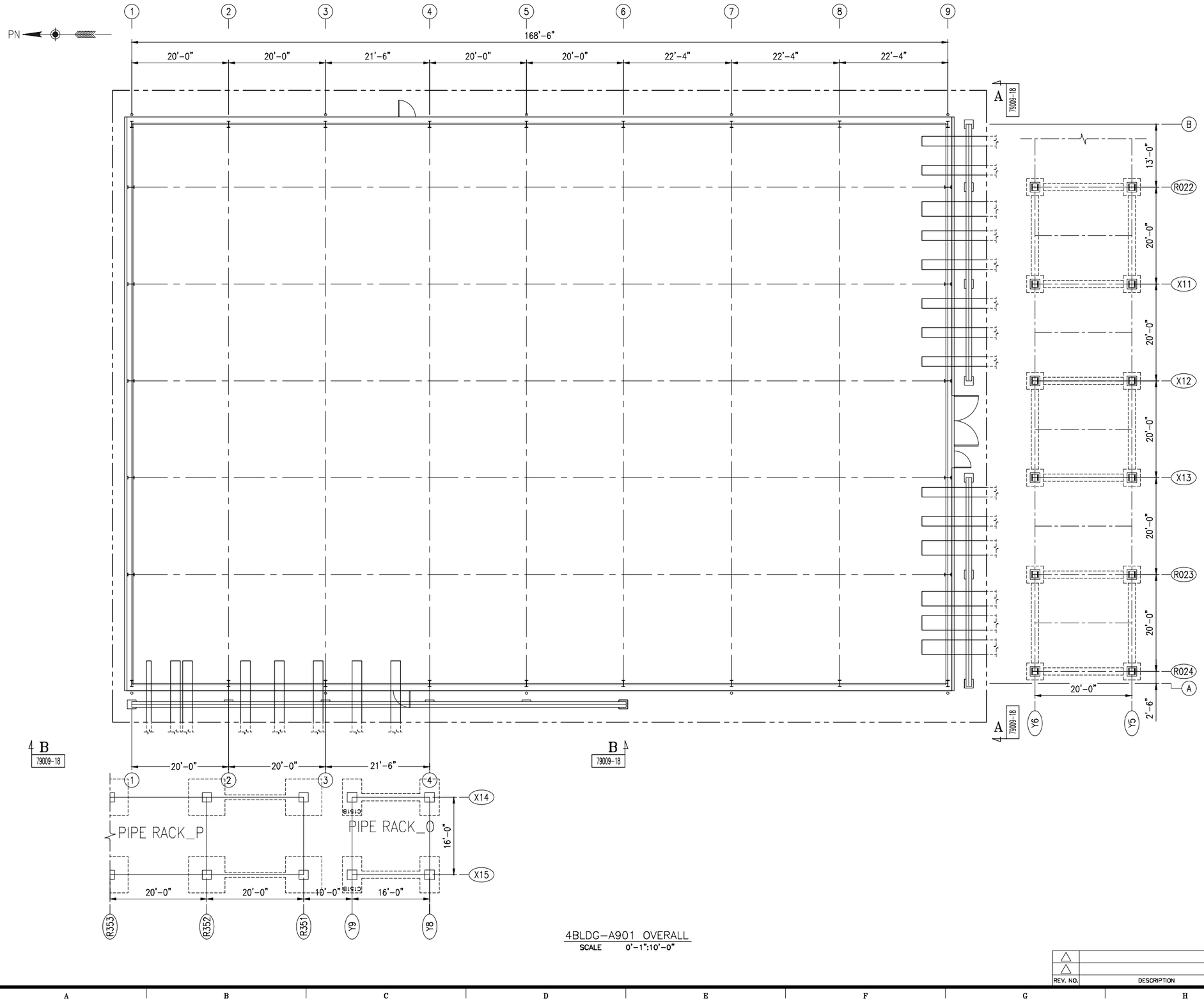

4BLDG-A901 OVERALL
SCALE 0'-1":10'-0"

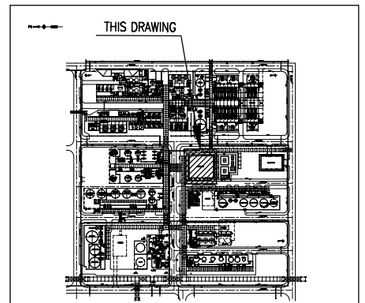

KEYPLAN

0'-0" 10'-0" 20'-0" 30'-0"
GRAPHIC SCALE 0'-1"=10'-0"

REF. NO.	REFERENCE DRAWINGS		REV.
	DWG./DOC. NO.	DWG./DOC. TITLE	
1	LPM-79009-18	CIVIL INFORMATION FOR 4BLDG-A901 SWITCHGEAR ROOM	0
		NORTH AND EAST SIDE (DETAIL AND SECTION VIEW-1)	

CERTIFIED FOR BID
DATE: SEP 25'26
SHINTECH

JOB NO. EA-503
CA4
BUILDING WORK

SHINTECH PLAQUEMINE CA PLANT-4
CIVIL INFORMATION FOR
4BLDG-A901 SWITCHGEAR ROOM
SOUTH AND WEST SIDE

SHINTECH

REV. NO.	DESCRIPTION	DRAWN	CHECKED	DATE
△				
△				

APPROVED BY Y.KANEKO
CHECKED BY R.GOTOH
DRAWN BY T.SAGISAKA

DATE	SEP.25.'26	SCALE	1"=10'-0"
DWG. NO.	LPA4-79009-17		△

CONFIDENTIAL : SHINTECH, ALL RIGHTS RESERVED. THE DRAWINGS, SPECIFICATIONS AND INFORMATIONS ARE THE PROPERTY OF SHINTECH, AND CONFIDENTIAL.

SEP.25.'26

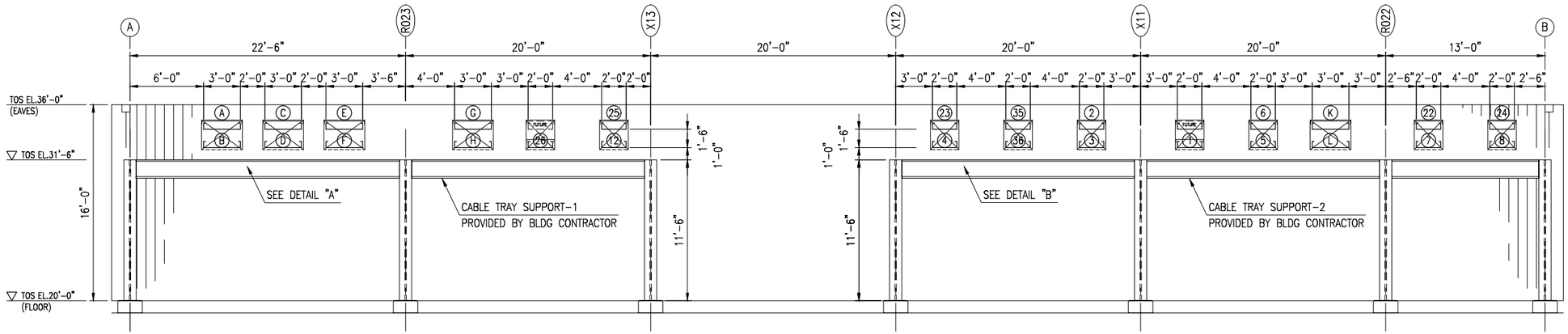

SECTION "A-A"
4BLDG-A-901 SOUTH ELEVATION
SCALE 0'-1"=5'-0"

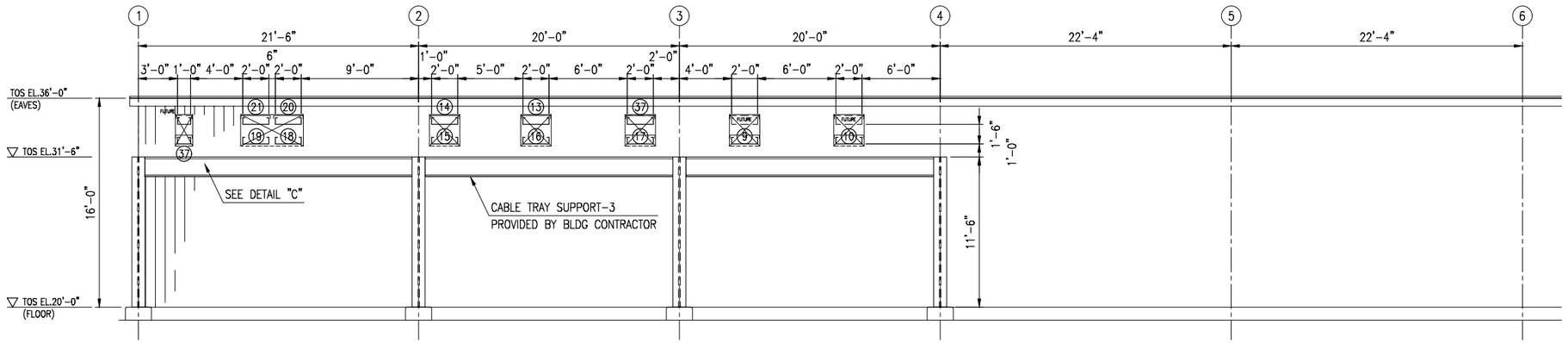

SECTION "B-B"
4BLDG-A-901 WEST ELEVATION
SCALE 0'-1"=5'-0"

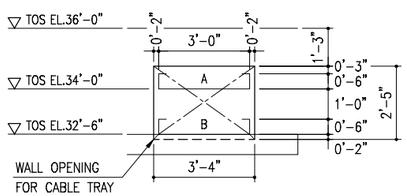

DETAIL "A"
SCALE 0'-1":2'-6"

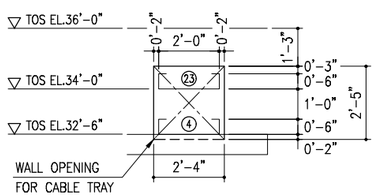

DETAIL "B"
SCALE 0'-1":2'-6"

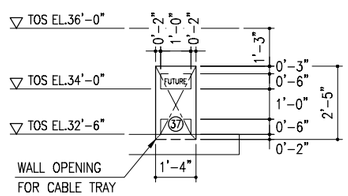

DETAIL "C"
SCALE 0'-1":2'-6"

NOTE

1. TOTAL LOAD OF CABLE TRAYS ON SUPPORT-1 IS APPROX. 8,500 LB.
2. TOTAL LOAD OF CABLE TRAYS ON SUPPORT-2 AND 3 IS APPROX. 11,000 LB.

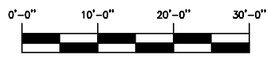

GRAPHIC SCALE 0'-1"=10'-0"

REF. NO.	REFERENCE DRAWINGS		REV.
	DWG./DOC. NO.	DWG./DOC. TITLE	
1	LPM-79009-17	CIVIL INFORMATION FOR 4BLDG-A901 SWITCHGEAR ROOM NORTH AND EAST SIDE	0

SHINTECH PLAQUEMINE CA PLANT-3

CIVIL INFORMATION FOR

4BLDG-A901 SWITCHGEAR ROOM

SOUTH AND WEST SIDE (DETAIL AND SECTION VIEW-1)

SHINTECH

REV. NO.	DESCRIPTION	DRAWN	CHECKED	DATE
△				
△				

APPROVED BY Y.KANEKO
CHECKED BY T.SAGISAKA
DRAWN BY R.GOTOH

DATE	SEP.16.'26	SCALE	1"=10'-0"
DWG. NO.	LPA4-79009-18		△

CONFIDENTIAL : SHINTECH, ALL RIGHTS RESERVED. THE DRAWINGS, SPECIFICATIONS AND INFORMATIONS ARE THE PROPERTY OF SHINTECH, AND CONFIDENTIAL.

SEP.16.'26

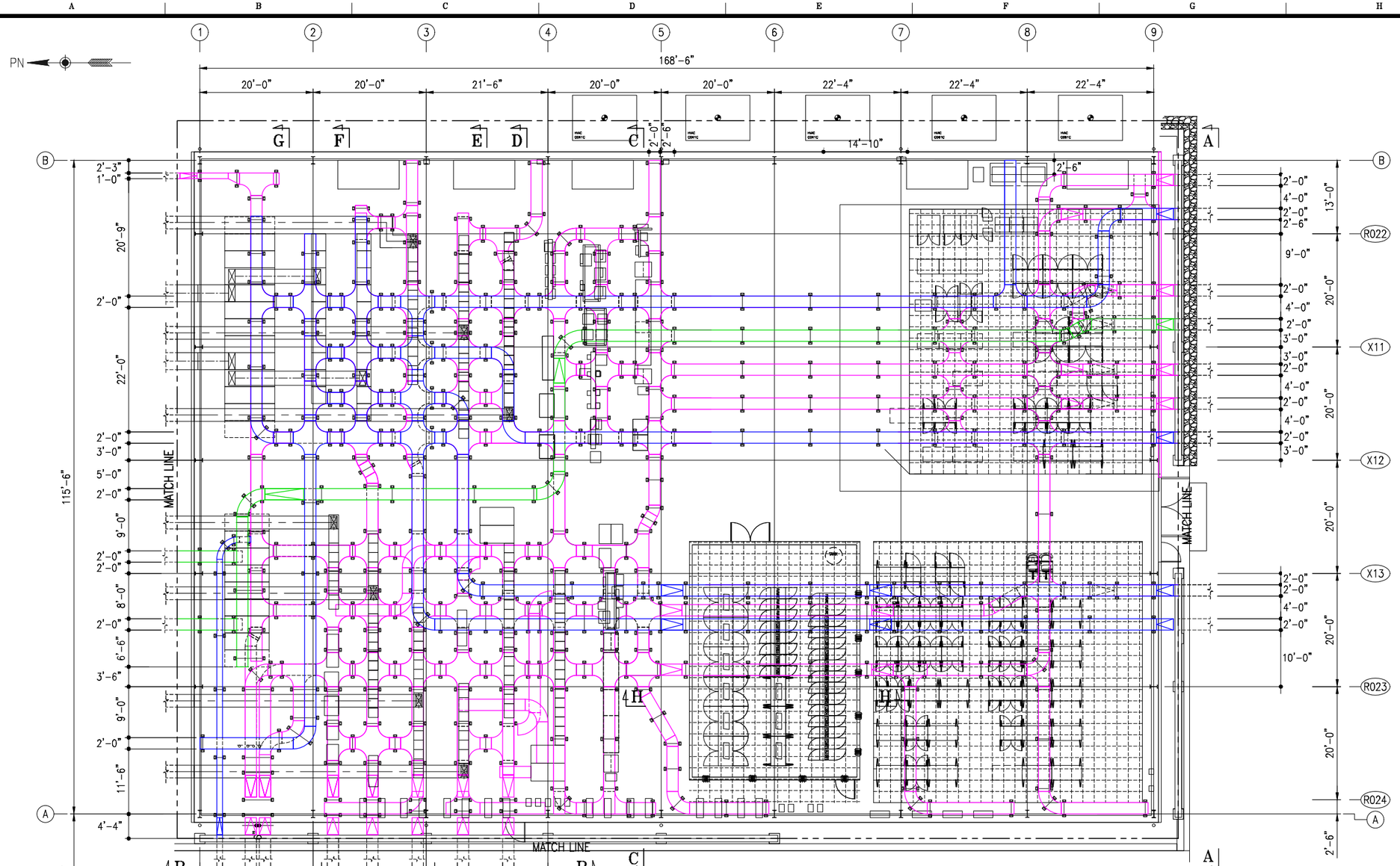

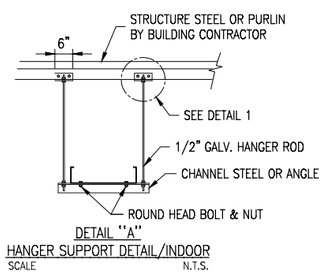

DETAIL "A"
HANGER SUPPORT DETAIL/INDOOR
SCALE N.T.S.

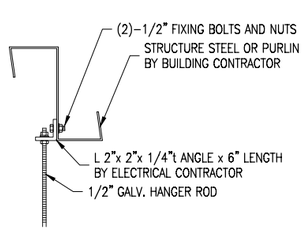

DETAIL "1"
SCALE N.T.S.

4BLDG-A901 (EL.+34'-0" & 35'-6")

NOTE

1. TOTAL LOAD OF ELECTRICAL CABLE TRAY WITH CABLES HUNGED FROM CEILING IN SWITCHGEAR ROOM IS APPROX. 327,000LBS. EQUALLY DISTRIBUTED FOR THE AREA OF 115'-6"x128'-6".
2. MARKS ▫—▫ IN SWGR RM A901 DESIGNATE SUSPENDED TRAY SUPPORTS TO BE INSTALLED BY TRAY CONTRACTOR.
3. ALL SECTION IN THIS DRAWING SHALL BE REFERRED FROM DWG.NO.LPA4-79014-01a,01b,01c,01d,01e.

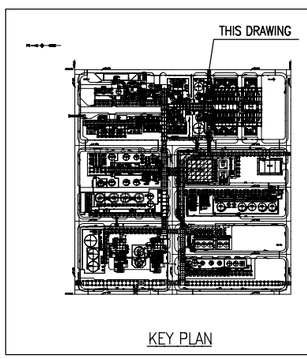

KEY PLAN

0'-0" 10'-0" 20'-0" 30'-0"
GRAPHIC SCALE 0'-1"=10'-0"

REF. NO.	REFERENCE DRAWINGS		REV.
	DWG./DOC. NO.	DWG./DOC. TITLE	
1	LPA4-79014-02	3BLDG-A901 CABLE TRAY LAYOUT (UPPER)	3
2	LPA4-79014-03	3BLDG-A901 CABLE TRAY LAYOUT (MIDDLE)	3
3	LPA4-79014-04	3BLDG-A901 CABLE TRAY LAYOUT (LOWER)	3
4	LPA4-79014-05	3BLDG-A901 CABLE TRAY LAYOUT (SECTION VIEW-1)	3
5	LPA4-79014-06	3BLDG-A901 CABLE TRAY LAYOUT (SECTION VIEW-2)	3

CERTIFIED FOR BID
DATE: SEP.19.'26
SHINTECH

JOB NO. EA-503
CA4
BUILDING WORK

REV. NO.	DESCRIPTION	DRAWN	CHECKED	DATE
△				
△				
△				
△				
△				
△				
△				

SHINTECH PLAQUEMINE CA PLANT-4
4BLDG-A901
SWITCHGEAR ROOM
CABLE TRAY LAYOUT (OVERALL)

SHINTECH

APPROVED BY Y.KANEKO	DATE	SEP.16.'26	SCALE 1"=10'-0"
CHECKED BY T.SAGISAKA	DWG. NO.	LPA4-79014-01	△
DRAWN BY R.GOTOH			

CONFIDENTIAL : SHINTECH, ALL RIGHTS RESERVED. THE DRAWINGS, SPECIFICATIONS AND INFORMATIONS ARE THE PROPERTY OF SHINTECH, AND CONFIDENTIAL.

SEP.16.'26

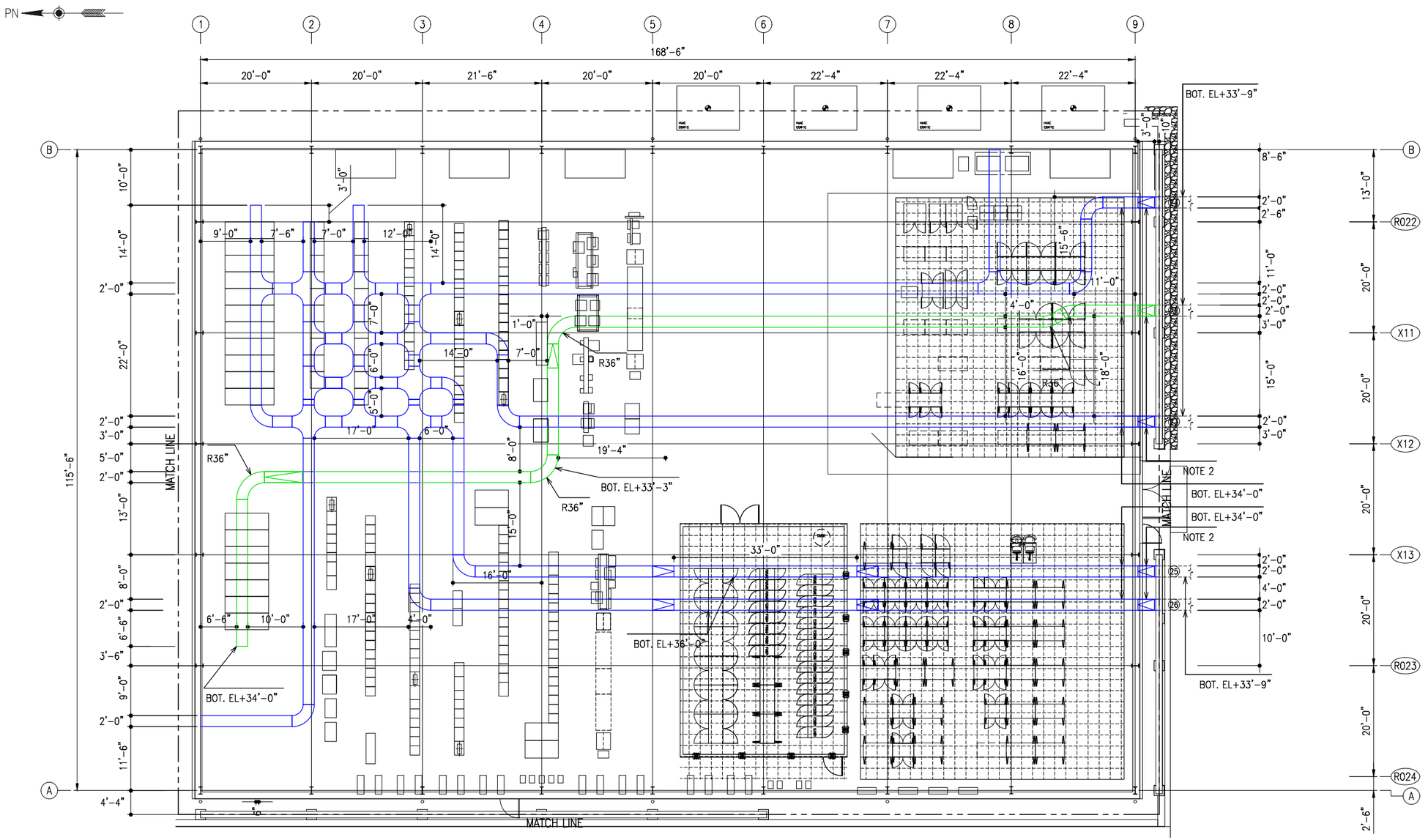

4BLDG-A901 (EL.+34'-0" & 35'-6")

NOTE

1. ALL SECTION IN THIS DRAWING SHALL BE REFERRED FROM DWG.NO.LPA4-79014-01d,01e.
2. ADJUSTABLE VERTICAL CONNECTOR SHALL BE USED.

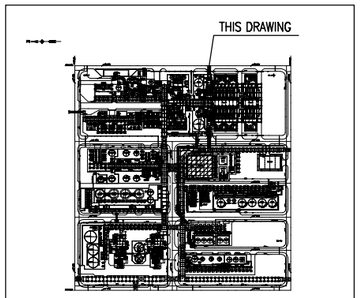

KEY PLAN

0'-0" 10'-0" 20'-0" 30'-0"

GRAPHIC SCALE 0'-1"=10'-0"

REF. NO.	REFERENCE DRAWINGS DWG./DOC. NO.	DWG./DOC. TITLE	REV.
1	LPM-79014-01	4BLDG-A901 CABLE TRAY LAYOUT (OVERALL)	0
2	LPM-79014-03	4BLDG-A901 CABLE TRAY LAYOUT (MIDDLE)	0
3	LPM-79014-04	4BLDG-A901 CABLE TRAY LAYOUT (LOWER)	0
4	LPM-79014-05	4BLDG-A901 CABLE TRAY LAYOUT (SECTION VIEW-1)	0
5	LPM-79014-06	4BLDG-A901 CABLE TRAY LAYOUT (SECTION VIEW-2)	0

CERTIFIED FOR BID
DATE: SEP.19.'26
SHINTECH

JOB NO. EA-503
CA4
BUILDING WORK

REV. NO.	DESCRIPTION	DRAWN	CHECKED	DATE
△				
△				
△				
△				
△				
△				
△				

SHINTECH PLAQUEMINE CA PLANT-4

4BLDG-A901

SWITCHGEAR ROOM

CABLE TRAY LAYOUT (UPPER)

SHINTECH

APPROVED BY	Y.KANEKO	DATE	SEP.22.'26
CHECKED BY	T.SAGISAKA	SCALE	1"=10'-0"
DRAWN BY	R.GOTOH	DWG. NO.	LPA4-79014-02 △0

CONFIDENTIAL : SHINTECH, ALL RIGHTS RESERVED. THE DRAWINGS, SPECIFICATIONS AND INFORMATIONS ARE THE PROPERTY OF SHINTECH, AND CONFIDENTIAL.

SEP.22.'26

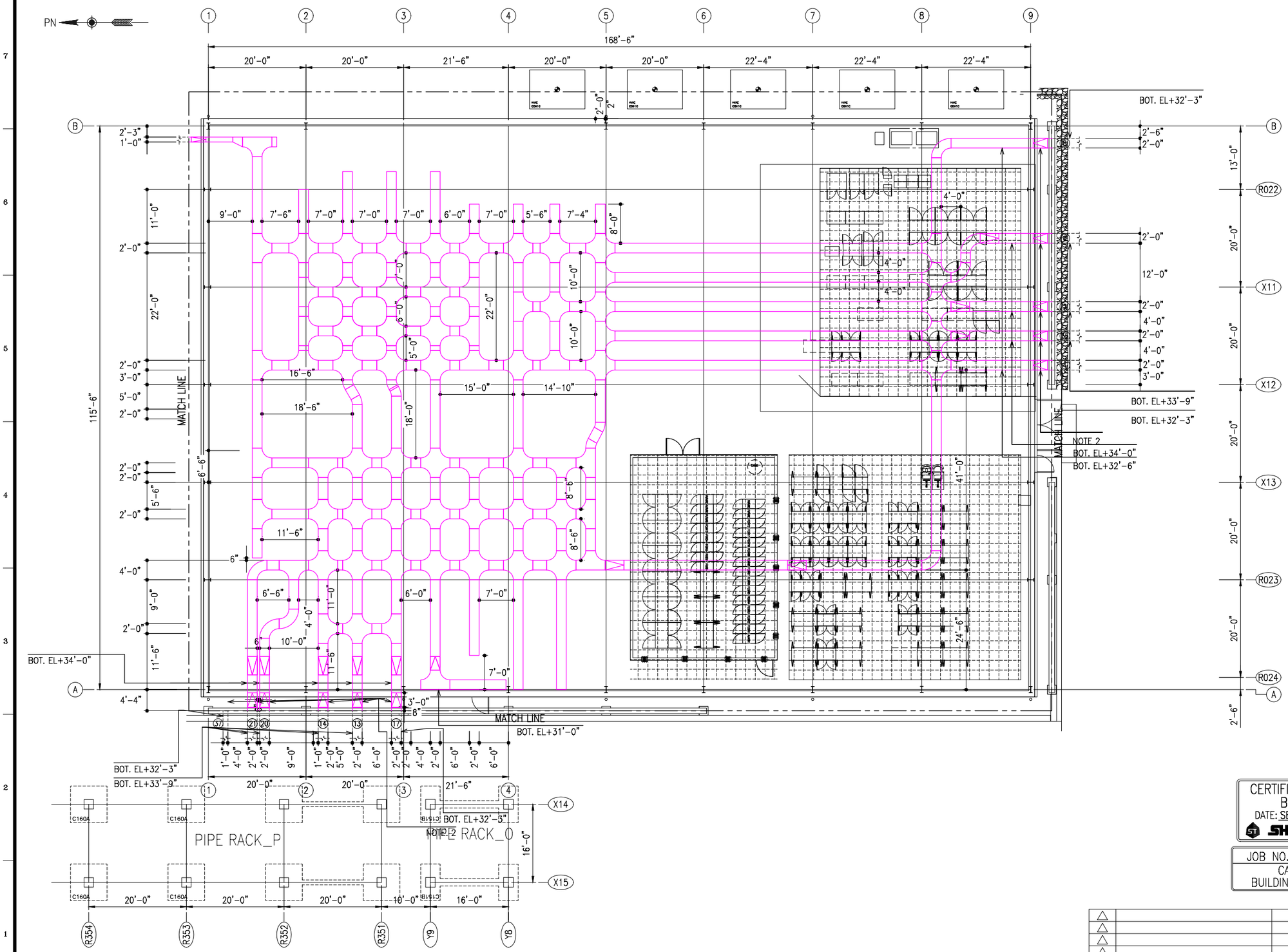

4BLDG-A901 (EL.+32'-6")

NOTE

1. ALL SECTION IN THIS DRAWING SHALL BE REFERRED FROM DWG.NO.LPA4-79014-01d,01e.
2. ADJUSTABLE VERTICAL CONNECTOR SHALL BE USED.

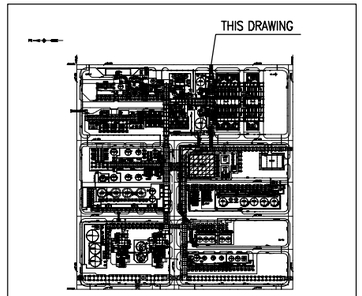

KEY PLAN

0'-0" 10'-0" 20'-0" 30'-0"

GRAPHIC SCALE 0'-1"=10'-0"

REF. NO.	REFERENCE DRAWINGS DWG./DOC. NO.	DWG./DOC. TITLE	REV.
1	LPA4-79014-01	4BLDG-A901 CABLE TRAY LAYOUT (OVERALL)	0
2	LPA4-79014-02	4BLDG-A901 CABLE TRAY LAYOUT (UPPER)	0
3	LPA4-79014-04	4BLDG-A901 CABLE TRAY LAYOUT (LOWER)	0
4	LPA4-79014-05	4BLDG-A901 CABLE TRAY LAYOUT (SECTION VIEW-1)	0
5	LPA4-79014-06	4BLDG-A901 CABLE TRAY LAYOUT (SECTION VIEW-2)	0

CERTIFIED FOR BID
DATE: SEP.19.'26
SHINTECH

JOB NO. EA-503
CA4
BUILDING WORK

REV. NO.	DESCRIPTION	DRAWN	CHECKED	DATE
△				
△				
△				
△				
△				
△				
△				

SHINTECH PLAQUEMINE CA PLANT-3

4BLDG-A901

SWITCHGEAR ROOM

CABLE TRAY LAYOUT (MIDDLE)

SHINTECH

APPROVED BY Y.KANEKO	DATE	SEP.22.'26	SCALE 1"=10'-0"
CHECKED BY T.SAGISAKA	DWG. NO.	LPA4-79014-03	0
DRAWN BY R.GOTOH			

CONFIDENTIAL : SHINTECH, ALL RIGHTS RESERVED. THE DRAWINGS, SPECIFICATIONS AND INFORMATIONS ARE THE PROPERTY OF SHINTECH, AND CONFIDENTIAL.

SEP.22.'26

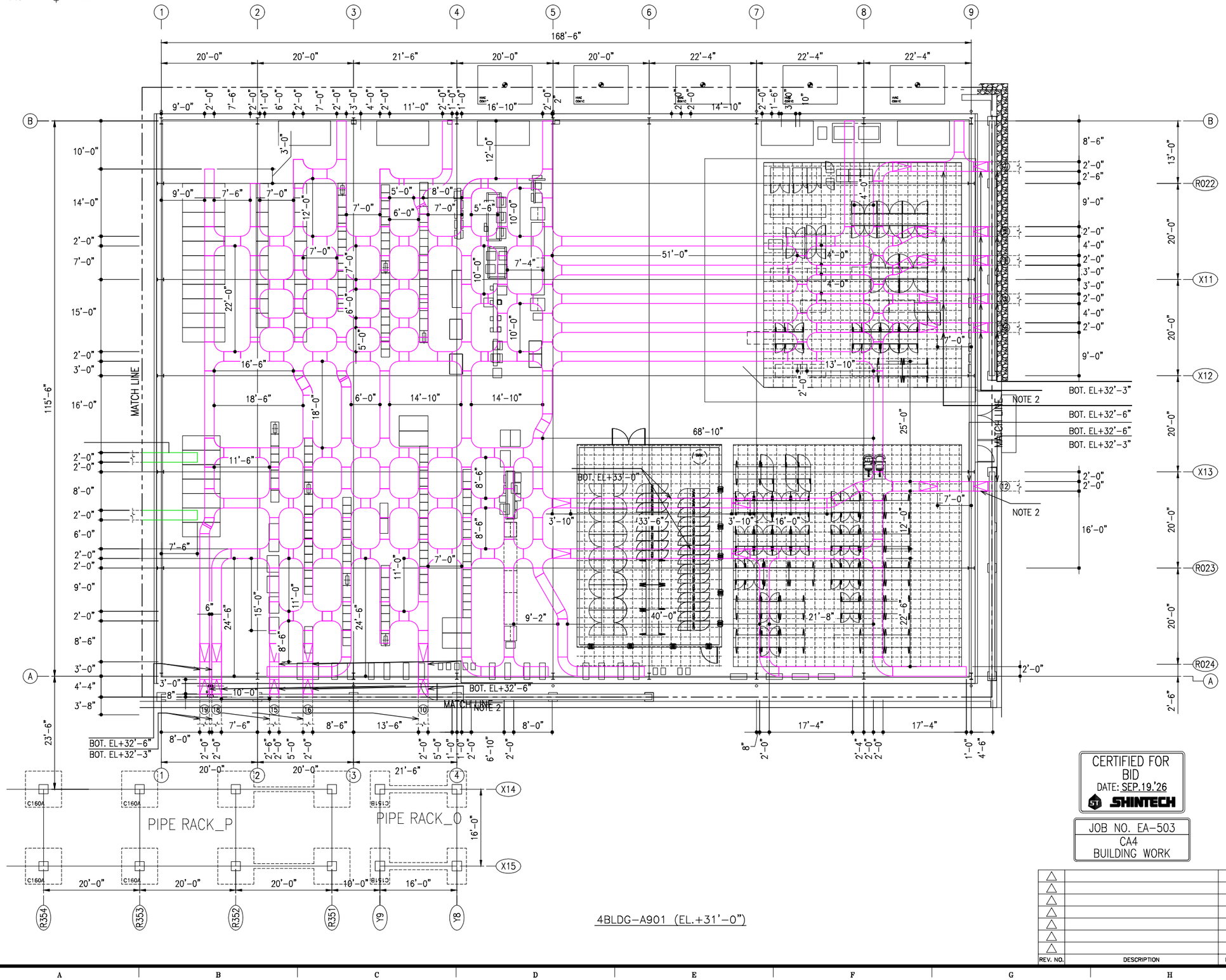

NOTE

1. ALL SECTION IN THIS DRAWING SHALL BE REFERRED FROM DWG.NO.LPA3-79014-01d,01e.
2. ADJUSTABLE VERTICAL CONNECTOR SHALL BE USED.

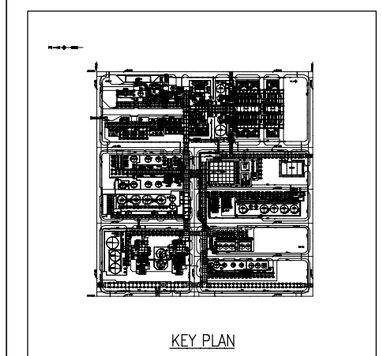

0'-0" 10'-0" 20'-0" 30'-0"

GRAPHIC SCALE 0'-1"=10'-0"

REF. NO.	REFERENCE DRAWINGS DWG./DOC. NO.	DWG./DOC. TITLE	REV.
1	LPA4-79014-01	4BLDG-A901 CABLE TRAY LAYOUT (OVERALL)	0
2	LPA4-79014-02	4BLDG-A901 CABLE TRAY LAYOUT (UPPER)	0
3	LPA4-79014-03	4BLDG-A901 CABLE TRAY LAYOUT (MIDDLE)	0
4	LPA4-79014-05	4BLDG-A901 CABLE TRAY LAYOUT (SECTION VIEW-1)	0
5	LPA4-79014-06	4BLDG-A901 CABLE TRAY LAYOUT (SECTION VIEW-2)	0

CERTIFIED FOR BID
DATE: SEP.19.'26
SHINTECH

JOB NO. EA-503
CA4
BUILDING WORK

REV. NO.	DESCRIPTION	DRAWN	CHECKED	DATE
△				
△				
△				
△				
△				
△				
△				

SHINTECH PLAQUEMINE CA PLANT-4

4BLDG-A901

SWITCHGEAR ROOM

CABLE TRAY LAYOUT (LOWER)

SHINTECH

APPROVED BY Y.KANEKO	DATE	SEP.22.'26	SCALE 1"=10'-0"
CHECKED BY T.SAGISAKA	DWG. NO.	LPA4-79014-04	0
DRAWN BY R.GOTOH			

CONFIDENTIAL : SHINTECH, ALL RIGHTS RESERVED. THE DRAWINGS, SPECIFICATIONS AND INFORMATIONS ARE THE PROPERTY OF SHINTECH, AND CONFIDENTIAL.

SEP.22.'26

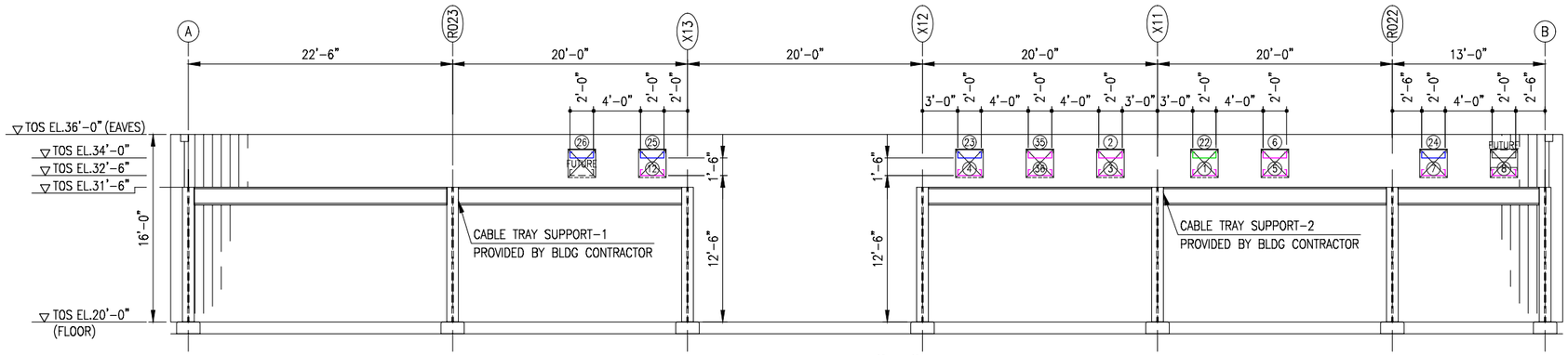

SECTION "A-A"
4BLDG-A901 SOUTH ELEVATION
SCALE 0'-1"=6'-0"

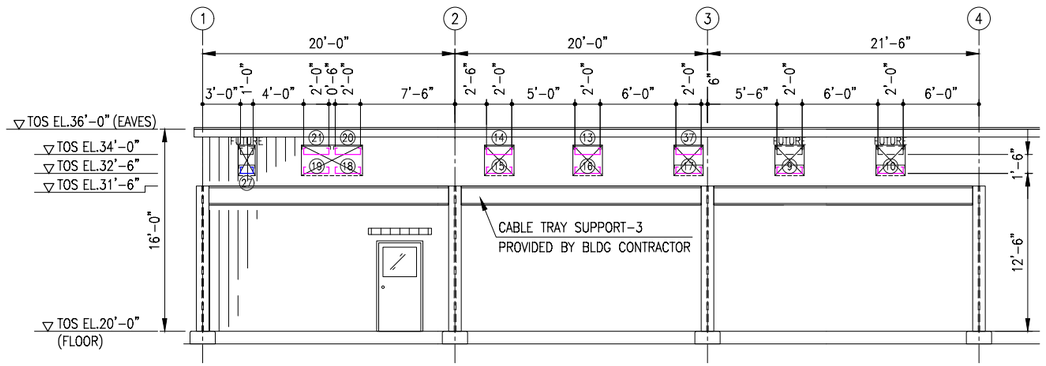

SECTION "B-B"
4BLDG-A901 WEST ELEVATION
SCALE 0'-1"=6'-0"

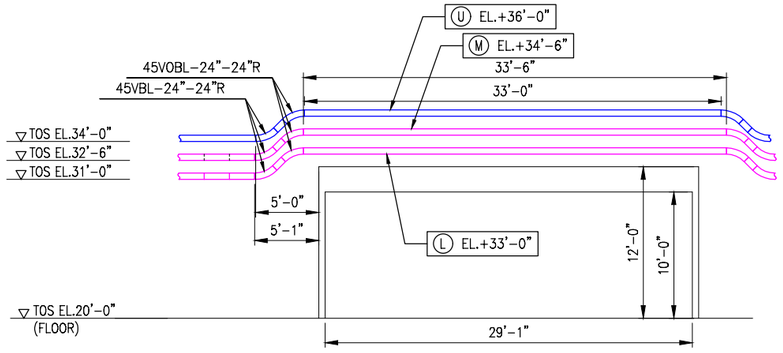

SECTION "H-H"
4BLDG-A901 TOP OF FCS ROOM
SCALE 0'-1"=6'-0"

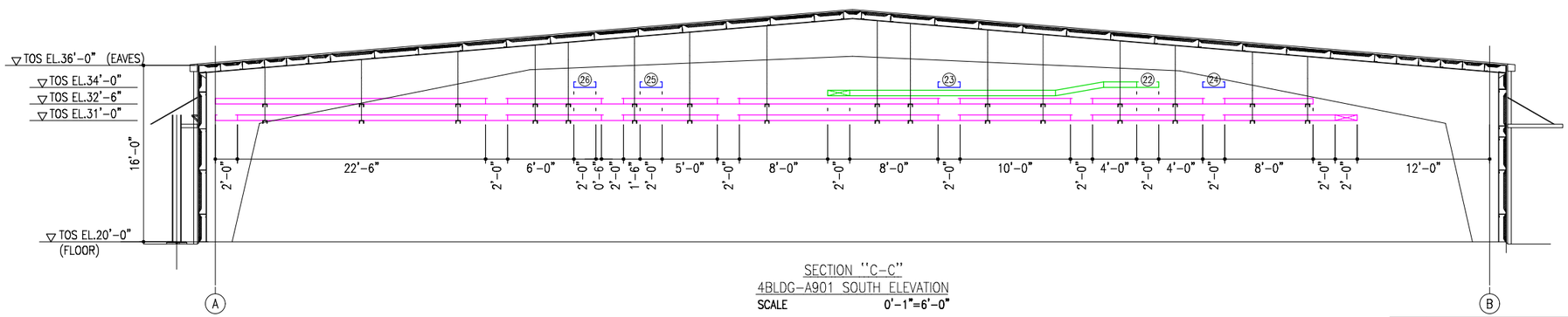

SECTION "C-C"
4BLDG-A901 SOUTH ELEVATION
SCALE 0'-1"=6'-0"

NOTE

1. MARKS ▫—▫ IN SWGR RM A901 DESIGNATE SUSPENDED TRAY SUPPORTS TO BE INSTALLED BY TRAY CONTRACTOR.
2. ALL SECTION IN THIS DRAWING SHALL BE REFERRED FROM DWG.NO.LPA4-79014-01a,01b,01c.

0'-0" 6'-0" 12'-0" 18'-0"
GRAPHIC SCALE 0'-1"=6'-0"

0'-0" 12'-0" 24'-0" 36'-0"
GRAPHIC SCALE 0'-1"=12'-0"

REF. NO.	REFERENCE DRAWINGS DWG./DOC. NO.	DWG./DOC. TITLE	REV.
1	LPM-79014-01	4BLDG-A901 CABLE TRAY LAYOUT (OVERALL)	0
2	LPM-79014-02	4BLDG-A901 CABLE TRAY LAYOUT (UPPER)	0
3	LPM-79014-03	4BLDG-A901 CABLE TRAY LAYOUT (MIDDLE)	0
4	LPM-79014-04	4BLDG-A901 CABLE TRAY LAYOUT (LOWER)	0
5	LPM-79014-06	4BLDG-A901 CABLE TRAY LAYOUT (SECTION VIEW-2)	0

CERTIFIED FOR BID
DATE: SEP.19.'26
SHINTECH

JOB NO. EA-503
CA4
BUILDING WORK

REV. NO.	DESCRIPTION	DRAWN	CHECKED	DATE
△				
△				
△				
△				
△				
△				

SHINTECH PLAQUEMINE CA PLANT-4
4BLDG-A901
SWITCHGEAR ROOM
CABLE TRAY LAYOUT (SECTION VIEW-1)

SHINTECH

APPROVED BY	Y.KANEKO	DATE	SEP.22.'26
CHECKED BY	T.SAGISAKA	SCALE	1"=12'-0"
DRAWN BY	R.GOTOH	DWG. NO.	LPA4-79014-05 △

CONFIDENTIAL : SHINTECH, ALL RIGHTS RESERVED. THE DRAWINGS, SPECIFICATIONS AND INFORMATIONS ARE THE PROPERTY OF SHINTECH, AND CONFIDENTIAL.

SEP.22.'26

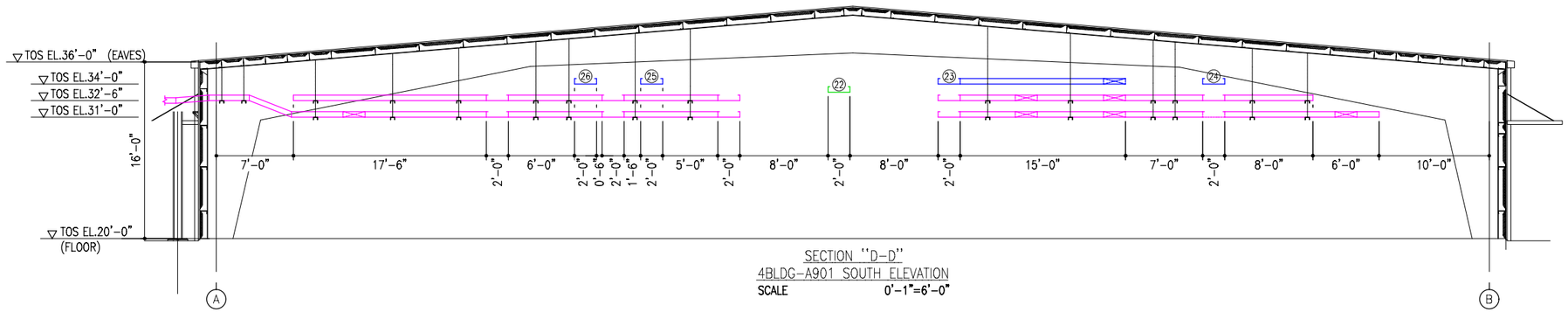

SECTION "D-D"
4BLDG-A901 SOUTH ELEVATION
SCALE 0'-1"=6'-0"

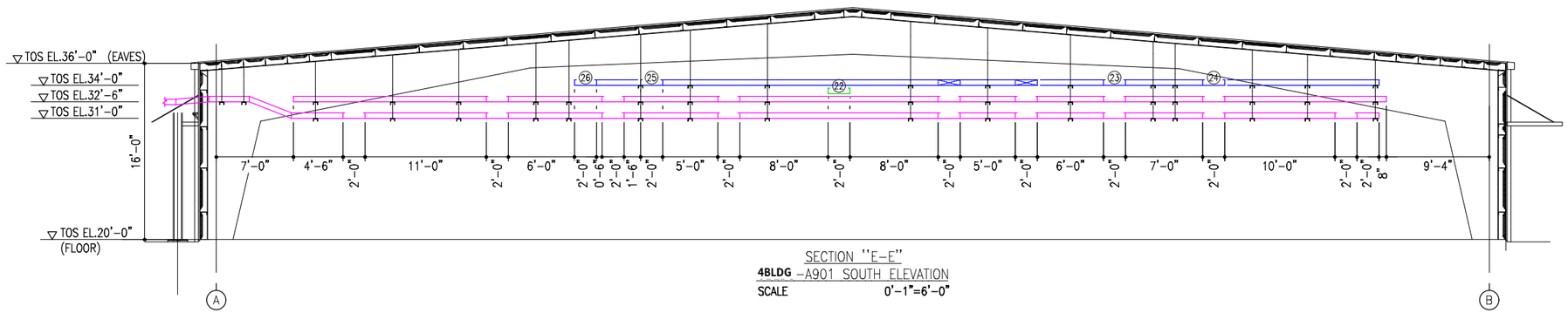

SECTION "E-E"
4BLDG -A901 SOUTH ELEVATION
SCALE 0'-1"=6'-0"

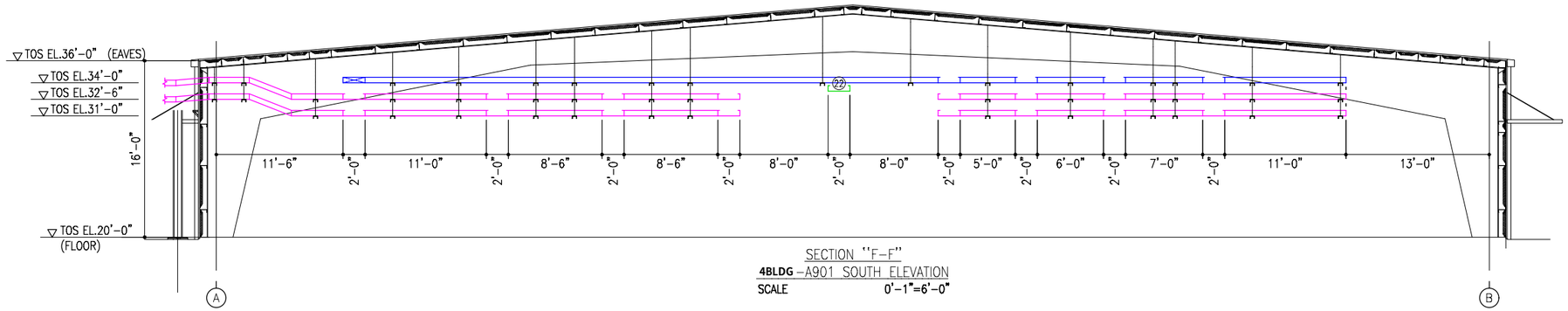

SECTION "F-F"
4BLDG -A901 SOUTH ELEVATION
SCALE 0'-1"=6'-0"

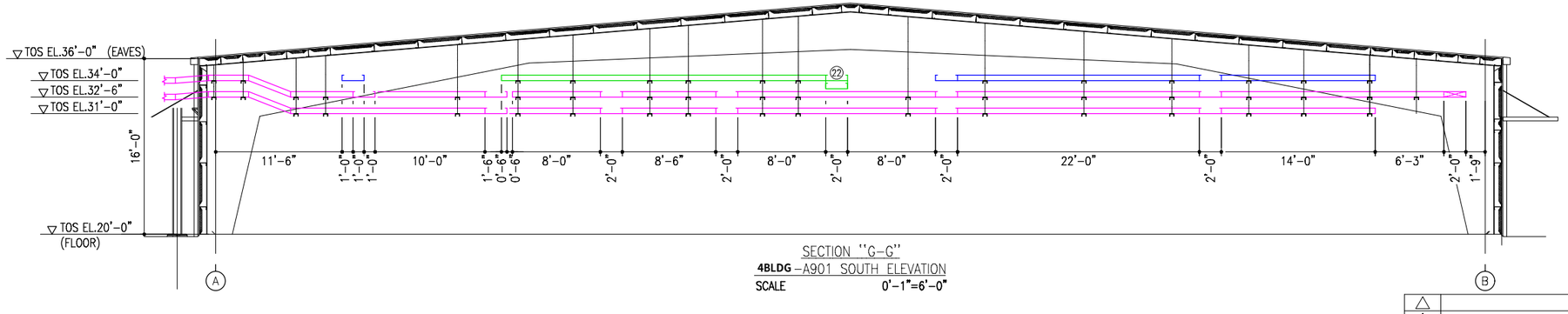

SECTION "G-G"
4BLDG -A901 SOUTH ELEVATION
SCALE 0'-1"=6'-0"

NOTE

1. MARKS ▫—▫ IN SWGR RM A901 DESIGNATE SUSPENDED TRAY SUPPORTS TO BE INSTALLED BY TRAY CONTRACTOR.
2. ALL SECTION IN THIS DRAWING SHALL BE REFERRED FROM DWG.NO.LPA4-79014-01a,01b,01c.

0'-0" 6'-0" 12'-0" 18'-0"
GRAPHIC SCALE 0'-1"=6'-0"

0'-0" 12'-0" 24'-0" 36'-0"
GRAPHIC SCALE 0'-1"=12'-0"

REF. NO.	REFERENCE DRAWINGS DWG./DOC. NO.	DWG./DOC. TITLE	REV.
1	LPA3-79014-01	3BLDG-A901 CABLE TRAY LAYOUT (OVERALL)	0
2	LPA3-79014-02	3BLDG-A901 CABLE TRAY LAYOUT (UPPER)	0
3	LPA3-79014-03	3BLDG-A901 CABLE TRAY LAYOUT (MIDDLE)	0
4	LPA3-79014-04	3BLDG-A901 CABLE TRAY LAYOUT (LOWER)	0
5	LPA3-79014-05	3BLDG-A901 CABLE TRAY LAYOUT (SECTION VIEW-1)	0

CERTIFIED FOR BID
DATE: SEP.19.
SHINTE

JOB NO. EA-503
CA4
BUILDING WORK

REV. NO.	DESCRIPTION	DRAWN	CHECKED	DATE

REV. NO.	DESCRIPTION	DRAWN	CHECKED	DATE

SHINTECH PLAQUEMINE CA PLANT-4
4BLDG-A901
SWITCHGEAR ROOM
CABLE TRAY LAYOUT (SECTION VIEW-2)

SHINTECH

APPROVED BY	Y.KANEKO	DATE	SEP.22.'26
CHECKED BY	T.SAGISAKA	SCALE	1"=12'-0"
DRAWN BY	R.GOTOH	DWG. NO.	LPA4-79014-06 3

CONFIDENTIAL : SHINTECH, ALL RIGHTS RESERVED. THE DRAWINGS, SPECIFICATIONS AND INFORMATIONS ARE THE PROPERTY OF SHINTECH, AND CONFIDENTIAL.

SEP.22.'26