NEW COLLEGE OF BUSINESS

SOUTHERN UNIVERSITY
BATON ROUGE, LOUISIANA

State Project No. 19-616-26-01
WBS F.19002383
State I.D. No. 2-17-038

Architect *(Joint Venture)*
Williams Architecture
700 N. 10th Street, Suite 350
Baton Rouge, LA 70806
225.387.4414

Architect *(Joint Venture)*
Coleman Partners Architects, LLC
3377 North Boulevard
Baton Rouge, LA 70806
225.387.4414

Structural Engineer
Wardlaw Lasseigne & LeBouef, LLC
554 Colonial Drive
Baton Rouge, LA 70806
225.926.1432

Environmental Consultant
Rayner Consulting Group LLC
7353 Highland Road
Baton Rouge, LA 70808
225.916.2824

Civil Engineer
Civil Solutions Consulting Group Inc.
One American Place, 301 Main St, Suite 830
Baton Rouge, LA 70801
225.283.0101

Landscape Architect
CARBO Landscape Architecture
6633 Government Street
Baton Rouge, LA 70806
225.302.7452

Mechanical, Electrical, and Plumbing Engineer
Thompson Luke and Associates, LLC
10705 Rieger Road
Baton Rouge, LA 70809
225.293.9474

State of Louisiana
Jeff Landry – Governor

Louisiana Department of Administration
Taylor F. Barras – Commissioner

Office of Facility Planning and Control
Matthew H. Baker - Director

BID SET

Project Manual, Volume 2

September 10, 2026

NEW COLLEGE OF BUSINESS

SOUTHERN UNIVERSITY
BATON ROUGE, LOUISIANA

State Project No. 19-616-26-01
WBS F.19002383
State I.D. No. 2-17-038

Architect *(Joint Venture)*
Williams Architecture
700 N. 10th Street, Suite 350
Baton Rouge, LA 70806
225.387.4414

Architect *(Joint Venture)*
Coleman Partners Architects, LLC
3377 North Boulevard
Baton Rouge, LA 70806
225.387.4414

Structural Engineer
Wardlaw Lasseigne & LeBouef, LLC
554 Colonial Drive
Baton Rouge, LA 70806
225.926.1432

Environmental Consultant
Rayner Consulting Group LLC
7353 Highland Road
Baton Rouge, LA 70808
225.916.2824

Civil Engineer
Civil Solutions Consulting Group Inc.
One American Place, 301 Main St, Suite 830
Baton Rouge, LA 70801
225.283.0101

Landscape Architect
CARBO Landscape Architecture
6633 Government Street
Baton Rouge, LA 70806
225.302.7452

Mechanical, Electrical, and Plumbing Engineer
Thompson Luke and Associates, LLC
10705 Rieger Road
Baton Rouge, LA 70809
225.293.9474

State of Louisiana
Jeff Landry – Governor

Louisiana Department of Administration
Taylor F. Barras – Commissioner

Office of Facility Planning and Control
Matthew H. Baker - Director

BID SET

Project Manual, Volume 1

September 10, 2026

VOLUME 1

DIVISION	SECTION TITLE	PAGES
DIVISION 0 – PROCUREMENT AND CONTRACTING REQUIREMENTS		
	ADVERTISEMENT FOR BIDS – FACILITY PLANNING AND CONTROL	1
	INSTRUCTIONS TO BIDDERS – FACILITY PLANNING AND CONTROL	7
	LOUISIANA UNIFORM PUBLIC WORK BID FORM	1
	LOUISIANA UNIFORM PUBLIC WORK BID FORM – UNIT PRICE FORM	1
	BID BOND FOR FACILITY PLANNING AND CONTROL PROJECTS	1
	A201-2017 GENERAL CONDITIONS OF THE CONTRACT FOR CONSTRUCTION	38
	SUPPLEMENTARY CONDTIONS – FACILITY PLANNING AND CONTROL	24
	CONTRACT BETWEEN OWNER AND CONTRACTOR AND PERFORMANCE AND PAYMENT BOND	4
	ATTESTATIONS AFFIDAVIT	1
	PRE-CONSTRUCTION CONFERENCE AGENDA - FACILITY PLANNING AND CONTROL	4
	SCHEDULE OF VALUES	6
	FACILITY PLANNING AND CONTROL CHANGE ORDER FORMS	1
	SUMMARY	1
	BREAKDOWN	1
	COMMENT SHEET	1
	UNIT PRICE BREAKDOWN	1
	DESCRIPTION	4
	DIAGRAM	1
	RECOMMENDATION OF ACCEPTANCE – FACILITY PLANNING AND CONTROL	3
	CERTIFICATE OF COMPLIANCE WITH AMERICANS WITH DISABILITIES ACT AND ARCHITECTURAL BARRIERS ACT ACCESSIBILITY GUIDELINES	
	CERTIFICATE OF COMPLIANCE WITH LOUISIANA BUILDING CODE FOR STATE OWNED BUILDINGS	
	PARTIAL OCCUPANCY FORM	1
	BUILDING PLAQUE	3
	RECOMMENDED AGENDA FOR ROOFING CONFERENCES – FACILITY PLANNING AND CONTROL	5
	PRE-CLOSEOUT CONFERENCE AGENDA – FACILITY PLANNING AND CONTROL	2
	LIQUIDATED DAMAGES ASSESSMENT	2
DIVISION 1 – GENERAL REQUIREMENTS		
011000	SUMMARY	4
011000	SUMMARY OF WORK (ENVIRONMENTAL)	12
012300	ALTERNATES	2
012500	SUBSTITUTION PROCEDURES	3
012600	CONTRACT MODIFICATION PROCEDURES	3
012900	PAYMENT PROCEDURES	5
013100	PROJECT MANAGEMENT AND COORDINATION	11
013300	SUBMITTAL PROCEDURES	8
014000	TESTING LABORATORY SERVICES	10
015000	TEMPORARY FACILITIES	2
016300	SUBSTITUTIONS	2

DIVISION	SECTION TITLE	PAGES
016500	PROJECT RECORD DOCUMENTS	2
017300	EXECUTION	7
DIVISION 2 – EXISTING CONDITIONS		
022310	TREE PROTECTION AND TRIMMING	5
024116	STRUCTURE DEMOLITION	7
028210	REMOVAL OF ASBESTOS-CONTAINING MATERIALS	16
028240	DISPOSAL OF ASBESTOS-CONTAINING WASTE MATERIAL	5
028340	REMOVAL AND DISPOSAL OF PCB-CONTAINING BALLASTS	8
028500	REMOVAL AND DISPOSAL OF MERCURY CONTAINING FLUORESCENT LIGHT TUBES	7
DIVISION 3 – CONCRETE		
030400	CUSTOM PRECAST CONCRETE	4
031000	CONCRETE FORMWORK – SITE CONCRETE	5
031000	CONCRETE FORMWORK AND FORM ACCESSORIES – BUILDING CONCRETE	7
031001	UNDER-SLAB VAPOR BARRIER	3
032000	CONCRETE REINFORCEMENT AND REINFORCEMENT SUPPORTS	3
032001	CONCRETE REINFORCEMENT FOR LANDSCAPE	3
033000	CAST-IN-PLACE CONCRETE	15
033101	CAST-IN-PLACE CONCRETE FOR LANDSCAPE	16
034000	PRECAST CONCRETE	4
034500	PRECAST ARCHITECTURAL CONCRETE	15
DIVISION 4 – MASONRY		
042000	UNIT MASONRY ASSEMBLIES	12
DIVISION 5 – METAL		
051200	STRUCTURAL STEEL FRAMING	5
052100	STEEL JOISTS	3
053123	STEEL ROOF DECK – 1.5, 22 GA	3
053123	STEEL ROOF DECK – 3.0, 22 GA	3
053123	STEEL ROOF DECK – ADD ALTERNATE #3	3
053150	STEEL COMPOSITE FLOOR DECK	3
054000	COLD-FORMED METAL FRAMING	9
055000	METAL FABRICATIONS	6
055113	METAL PAN STAIRS	8
057300	DECORATIVE METAL RAILINGS	6
057313	GLAZED DECORATIVE METAL RAILINGS	6
DIVISION 6 – WOOD AND PLASTICS		
061053	MISCELLANEOUS ROUGH CARPENTRY	4
061600	SHEATHING	5
DIVISION 7 – THERMAL AND MOISTURE PROTECTION		
071713	BENTONITE WATERPROOFING	3
072100	BUILDING INSULATION	6
072119	FOAMED-IN-PLACE INSULATION	3
072420	DIRECT EXTERIOR FINISH SYSTEM (DEFS)	4

DIVISION	SECTION TITLE	PAGES
072726	FLUID-APPLIED MEMBRANE AIR BARRIERS	7
074213	METAL WALL PANELS	9
075216	STYRENE-BUTADIENE-STYRENE (SBS) MODIFIED BITUMINOUS MEMBRANE ROOFING	13
MANUFACTURER'S WEATHERTIGHTNESS MEMBRANE ROOFING SYSTEM WARRANTY		5
ROOFING GUARANTEE R-1		3
077100	ROOF SPECIALTIES	10
077200	ROOF ACCESSORIES	6
077600	ROOF DECKING PAVERS	4
078413	THROUGH-PENETRATION FIRESTOP SYSTEMS	6
078443	JOINT FIRESTOPPING	5
079200	JOINT SEALANTS	11
079200	JOINT SEALANTS FOR PAVING	5
DIVISION 8 – DOORS AND WINDOWS		
081113	HOLLOW METAL DOORS AND FRAMES	8
081416	FLUSH WOOD DOORS	7
083513	ACCORDIAN-FOLDING FIRE DOORS	6
084113	ALUMINUM-FRAMED ENTRANCES AND STOREFRONTS	10
084413	GLAZED ALUMINUM CURTAIN WALLS	8
087100	DOOR HARDWARE	28
088000	GLAZING	11
DIVISION 9 – FINISHES		
092116	GYPSUM BOARD SHAFT-WALL ASSEMBLIES	5
092216	NON-STRUCTURAL METAL FRAMING	6
092900	GYPSUM BOARD	8
093013	CERAMIC TILE	11
094020	RESINOUS MATRIX TERRAZZO FLOORING	8
095113	ACOUSTICAL PANEL CEILINGS	5
095400	INTEGRATED CEILING ASSEMBLIES	8
095423	LINEAR METAL CEILINGS	10
096513	RESILIENT BASE AND ACCESSORIES	5
096519	RESILENT TILE FLOORING – LVT	4
096617	PRECAST TERRAZZO STAIR TREADS AND RISERS	4
096813	TILE CARPETING	7
098433	SOUND-ABSORBING WALL UNITS	5
098434	WOOD VENEER SOUND-ABSORBING WALL UNITS	4
099600	HIGH-PERFORMANCE COATINGS	9
DIVISION 10 – SPECIALTIES		
101150	FIXED GLASS MARKERBOARDS	4
101420	UNFRAMED INTERIOR ROOM SIGNS	4
102113	TOILET COMPARTMENTS	5
102226	FOLDING GLASS-PANEL PARTITIONS	5
102239	FOLDING PANEL PARTITIONS	5
102800	TOILET AND BATH ACCESSORIES	5
104413	FIRE-PROTECTION CABINETS	5

DIVISION	SECTION TITLE	PAGES
104416	FIRE EXTINGUISHERS	3
DIVISION 11 – EQUIPMENT		
113013	APPLIANCES	3
115213	PROJECTION SCREENS	3
DIVISION 12 – FURNISHINGS		
122313	ROLLER SHADES	5
123216	PLASTIC LAMINATE CASEWORK	5
123661	SIMULATED STONE COUNTERTOPS	3
126100	FIXED AUDITORIUM SEATING	4
126101	FIXED LECTURE TABLES WITH INTEGRAL SWING AWAY SEATS	4
DIVISION 14 – CONVEYING EQUIPMENT		
142123	MACHINE ROOM-LESS ELECTRIC TRACTION PASSENGER ELEVATORS	18

END OF VOLUME 1

VOLUME 2

DIVISION	SECTION TITLE	PAGES
DIVISION 21 – FIRE PROTECTION		
210000	FIRE PROTECTION SYSTEM	9
211313	WET-PIPE SPRINKLER SYSTEMS	4
DIVISION 22 – PLUMBING		
221000	PLUMBING PIPING	11
221010	PLUMBING SPECIALTIES	4
224000	PLUMBING FIXTURES AND TRIM	3
DIVISION 23 – HEATING, VENTILATING AND AIR CONDITIONING		
230000	GENERAL MECHANICAL	7
230500	BASIC MECHANICAL MATERIALS AND METHODS	9
230513	MOTORS	6
230515	VARIABLE FREQUENCY DRIVES (VFD)	7
230523	VALVES	4
230529	SUPPORTS AND ANCHORS	4
230548	VIBRATION ISOLATION	2
230553	MECHANICAL IDENTIFICATION	3
230593	TESTING, ADJUSTING, AND BALANCING	7
230700	PIPING AND EQUIPMENT INSULATION	3
230900	BUILDING TEMPERATURE CONTROL SYSTEM	41
232113	HYDRONIC PIPING	4
232114	UNDERGROUND PRE-INSULATED PIPING	4
232116	HYDRONIC SPECIALTIES	3
232123	PUMPS	3
232500	CHEMICAL WATER TREATMENT	7
233100	DUCTWORK	8
233410	GENERAL EXHAUST SYSTEM	3
233600	AIR TERMINAL UNITS	4
233700	AIR OUTLETS AND INLETS	3
235216	CONDENSING OUTDOOR HOT WATER GAS FIRED BOILER	4
237413	AIR HANDLING UNITS WITH COILS	6
DIVISION 26 – ELECTRICAL		
260100	BASIC ELECTRICAL REQUIREMENTS	11
260513	MEDIUM VOLTAGE CABLES	6
260519	LOW-VOLTAGE ELECTRICAL POWER CONDUCTORS AND CABLES	4
260526	GROUNDING AND BONDING FOR ELECTRICAL SYSTEMS	8
260529	HANGERS AND SUPPORTS FOR ELECTRICAL SYSTEMS	8
260533	RACEWAYS AND BOXES FOR ELECTRICAL SYSTEMS	10
260543	UNDERGROUND DUCTS AND RACEWAYS FOR ELECTRICAL SYSTEMS	13
260553	IDENTIFICATION FOR ELECTRICAL SYSTEMS	7
260572	OVERCURRENT PROTECTIVE DEVICE SHORT-CIRCUIT STUDY	6
260573	OVERCURRENT PROTECTIVE DEVICE COORDINATION STUDY	9
260574	OVERCURRENT PROTECTIVE DEVICE ARC-FLASH STUDY	7

DIVISION	SECTION TITLE	PAGES
261200	MEDIUM VOLTAGE TRANSFORMERS	5
262000	SERVICE AND DISTRIBUTION	4
262726	WIRING DEVICES	7
263213	NATURAL GAS GENERATOR SETS	12
263600	AUTOMATIC TRANSFER SWITCHES	13
264100	LIGHTNING PROTECTION SYSTEM	4
264313	TVSS FOR LOW VOLTAGE ELECTRICAL POWER CIRCUITS	6
265000	LIGHTING	4
DIVISION 27 – COMMUNICATIONS		
270000	STRUCTURED CABLING SYSTEMS	22
274100	ARCHITECTURALLY INTEGRATED AUDIOVISUAL SYSTEMS	23
275120	AREA OF RESCUE (AREA OF REFUGE)	5
DIVISION 28 – ELECTRONIC SAFETY AND SECURITY		
282000	VIDEO SURVEILLANCE SYSTEM	3
283100	FIRE DETECTION AND ALARM	15
DIVISION 31 – EARTHWORK		
310000	EARTHWORK	4
311000	SITE CLEARING	4
312001	EARTH MOVING FOR LANDSCAPE	8
313116	TERMITE CONTROL	4
316316	AUGERCAST GROUT PILING	8
DIVISION 32 – EXTERIOR IMRPOVEMENTS		
321123	AGGREGATE BASE COURSE	1
321313	CONCRETE PAVING FOR PARKING LOT	12
321313	CONCRETE PAVING FOR LANDSCAPE	10
321400	UNIT PAVING	5
321723	PAVEMENT MARKINGS AND MISCELLANEOUS SIGNING	5
328400	IRRIGATION	10
329200	TURF AND GRASS	8
329300	PLANTS	15
DIVISION 33 – UTILITIES		
331400	WATER PIPING MATERIALS AND STRUCTURES	18
333113	SANITARY SEWER GRAVITY PIPING	15
334100	CATCH BASINS AND DRAINAGE PIPE	3
334300	STORMWATER CONVEYANCE	12
GEOTECHNICAL REPORT by The Beta Group dated May 22, 2023		66
SAMPLE REPORT by Rayner Consulting Group dated May 20, 2024		43

END OF TABLE OF CONTENTS

VOLUME 1

DIVISION	SECTION TITLE	PAGES
DIVISION 0 – PROCUREMENT AND CONTRACTING REQUIREMENTS		
	ADVERTISEMENT FOR BIDS – FACILITY PLANNING AND CONTROL	1
	INSTRUCTIONS TO BIDDERS – FACILITY PLANNING AND CONTROL	7
	LOUISIANA UNIFORM PUBLIC WORK BID FORM	1
	LOUISIANA UNIFORM PUBLIC WORK BID FORM – UNIT PRICE FORM	1
	BID BOND FOR FACILITY PLANNING AND CONTROL PROJECTS	1
	A201-2017 GENERAL CONDITIONS OF THE CONTRACT FOR CONSTRUCTION	38
	SUPPLEMENTARY CONDTIONS – FACILITY PLANNING AND CONTROL	24
	CONTRACT BETWEEN OWNER AND CONTRACTOR AND PERFORMANCE AND PAYMENT BOND	4
	ATTESTATIONS AFFIDAVIT	1
	PRE-CONSTRUCTION CONFERENCE AGENDA - FACILITY PLANNING AND CONTROL	4
	SCHEDULE OF VALUES	6
	FACILITY PLANNING AND CONTROL CHANGE ORDER FORMS	1
	SUMMARY	1
	BREAKDOWN	1
	COMMENT SHEET	1
	UNIT PRICE BREAKDOWN	1
	DESCRIPTION	4
	DIAGRAM	1
	RECOMMENDATION OF ACCEPTANCE – FACILITY PLANNING AND CONTROL	3
	CERTIFICATE OF COMPLIANCE WITH AMERICANS WITH DISABILITIES ACT AND ARCHITECTURAL BARRIERS ACT ACCESSIBILITY GUIDELINES	
	CERTIFICATE OF COMPLIANCE WITH LOUISIANA BUILDING CODE FOR STATE OWNED BUILDINGS	
	PARTIAL OCCUPANCY FORM	1
	BUILDING PLAQUE	3
	RECOMMENDED AGENDA FOR ROOFING CONFERENCES – FACILITY PLANNING AND CONTROL	5
	PRE-CLOSEOUT CONFERENCE AGENDA – FACILITY PLANNING AND CONTROL	2
	LIQUIDATED DAMAGES ASSESSMENT	2
DIVISION 1 – GENERAL REQUIREMENTS		
011000	SUMMARY	4
011000	SUMMARY OF WORK (ENVIRONMENTAL)	12
012300	ALTERNATES	2
012500	SUBSTITUTION PROCEDURES	3
012600	CONTRACT MODIFICATION PROCEDURES	3
012900	PAYMENT PROCEDURES	5
013100	PROJECT MANAGEMENT AND COORDINATION	11
013300	SUBMITTAL PROCEDURES	8
014000	TESTING LABORATORY SERVICES	10
015000	TEMPORARY FACILITIES	2
016300	SUBSTITUTIONS	2

DIVISION	SECTION TITLE	PAGES
016500	PROJECT RECORD DOCUMENTS	2
017300	EXECUTION	7
DIVISION 2 – EXISTING CONDITIONS		
022310	TREE PROTECTION AND TRIMMING	5
024116	STRUCTURE DEMOLITION	7
028210	REMOVAL OF ASBESTOS-CONTAINING MATERIALS	16
028240	DISPOSAL OF ASBESTOS-CONTAINING WASTE MATERIAL	5
028340	REMOVAL AND DISPOSAL OF PCB-CONTAINING BALLASTS	8
028500	REMOVAL AND DISPOSAL OF MERCURY CONTAINING FLUORESCENT LIGHT TUBES	7
DIVISION 3 – CONCRETE		
030400	CUSTOM PRECAST CONCRETE	4
031000	CONCRETE FORMWORK – SITE CONCRETE	5
031000	CONCRETE FORMWORK AND FORM ACCESSORIES – BUILDING CONCRETE	7
031001	UNDER-SLAB VAPOR BARRIER	3
032000	CONCRETE REINFORCEMENT AND REINFORCEMENT SUPPORTS	3
032001	CONCRETE REINFORCEMENT FOR LANDSCAPE	3
033000	CAST-IN-PLACE CONCRETE	15
033101	CAST-IN-PLACE CONCRETE FOR LANDSCAPE	16
034000	PRECAST CONCRETE	4
034500	PRECAST ARCHITECTURAL CONCRETE	15
DIVISION 4 – MASONRY		
042000	UNIT MASONRY ASSEMBLIES	12
DIVISION 5 – METAL		
051200	STRUCTURAL STEEL FRAMING	5
052100	STEEL JOISTS	3
053123	STEEL ROOF DECK – 1.5, 22 GA	3
053123	STEEL ROOF DECK – 3.0, 22 GA	3
053123	STEEL ROOF DECK – ADD ALTERNATE #3	3
053150	STEEL COMPOSITE FLOOR DECK	3
054000	COLD-FORMED METAL FRAMING	9
055000	METAL FABRICATIONS	6
055113	METAL PAN STAIRS	8
057300	DECORATIVE METAL RAILINGS	6
057313	GLAZED DECORATIVE METAL RAILINGS	6
DIVISION 6 – WOOD AND PLASTICS		
061053	MISCELLANEOUS ROUGH CARPENTRY	4
061600	SHEATHING	5
DIVISION 7 – THERMAL AND MOISTURE PROTECTION		
071713	BENTONITE WATERPROOFING	3
072100	BUILDING INSULATION	6
072119	FOAMED-IN-PLACE INSULATION	3
072420	DIRECT EXTERIOR FINISH SYSTEM (DEFS)	4

DIVISION	SECTION TITLE	PAGES
072726	FLUID-APPLIED MEMBRANE AIR BARRIERS	7
074213	METAL WALL PANELS	9
075216	STYRENE-BUTADIENE-STYRENE (SBS) MODIFIED BITUMINOUS MEMBRANE ROOFING	13
MANUFACTURER'S WEATHERTIGHTNESS MEMBRANE ROOFING SYSTEM WARRANTY		5
ROOFING GUARANTEE R-1		3
077100	ROOF SPECIALTIES	10
077200	ROOF ACCESSORIES	6
077600	ROOF DECKING PAVERS	4
078413	THROUGH-PENETRATION FIRESTOP SYSTEMS	6
078443	JOINT FIRESTOPPING	5
079200	JOINT SEALANTS	11
079200	JOINT SEALANTS FOR PAVING	5
DIVISION 8 – DOORS AND WINDOWS		
081113	HOLLOW METAL DOORS AND FRAMES	8
081416	FLUSH WOOD DOORS	7
083513	ACCORDIAN-FOLDING FIRE DOORS	6
084113	ALUMINUM-FRAMED ENTRANCES AND STOREFRONTS	10
084413	GLAZED ALUMINUM CURTAIN WALLS	8
087100	DOOR HARDWARE	28
088000	GLAZING	11
DIVISION 9 – FINISHES		
092116	GYPSUM BOARD SHAFT-WALL ASSEMBLIES	5
092216	NON-STRUCTURAL METAL FRAMING	6
092900	GYPSUM BOARD	8
093013	CERAMIC TILE	11
094020	RESINOUS MATRIX TERRAZZO FLOORING	8
095113	ACOUSTICAL PANEL CEILINGS	5
095400	INTEGRATED CEILING ASSEMBLIES	8
095423	LINEAR METAL CEILINGS	10
096513	RESILIENT BASE AND ACCESSORIES	5
096519	RESILENT TILE FLOORING – LVT	4
096617	PRECAST TERRAZZO STAIR TREADS AND RISERS	4
096813	TILE CARPETING	7
098433	SOUND-ABSORBING WALL UNITS	5
098434	WOOD VENEER SOUND-ABSORBING WALL UNITS	4
099600	HIGH-PERFORMANCE COATINGS	9
DIVISION 10 – SPECIALTIES		
101150	FIXED GLASS MARKERBOARDS	4
101420	UNFRAMED INTERIOR ROOM SIGNS	4
102113	TOILET COMPARTMENTS	5
102226	FOLDING GLASS-PANEL PARTITIONS	5
102239	FOLDING PANEL PARTITIONS	5
102800	TOILET AND BATH ACCESSORIES	5
104413	FIRE-PROTECTION CABINETS	5

DIVISION	SECTION TITLE	PAGES
104416	FIRE EXTINGUISHERS	3
DIVISION 11 – EQUIPMENT		
113013	APPLIANCES	3
115213	PROJECTION SCREENS	3
DIVISION 12 – FURNISHINGS		
122313	ROLLER SHADES	5
123216	PLASTIC LAMINATE CASEWORK	5
123661	SIMULATED STONE COUNTERTOPS	3
126100	FIXED AUDITORIUM SEATING	4
126101	FIXED LECTURE TABLES WITH INTEGRAL SWING AWAY SEATS	4
DIVISION 14 – CONVEYING EQUIPMENT		
142123	MACHINE ROOM-LESS ELECTRIC TRACTION PASSENGER ELEVATORS	18

END OF VOLUME 1

VOLUME 2

DIVISION	SECTION TITLE	PAGES
DIVISION 21 – FIRE PROTECTION		
210000	FIRE PROTECTION SYSTEM	9
211313	WET-PIPE SPRINKLER SYSTEMS	4
DIVISION 22 – PLUMBING		
221000	PLUMBING PIPING	11
221010	PLUMBING SPECIALTIES	4
224000	PLUMBING FIXTURES AND TRIM	3
DIVISION 23 – HEATING, VENTILATING AND AIR CONDITIONING		
230000	GENERAL MECHANICAL	7
230500	BASIC MECHANICAL MATERIALS AND METHODS	9
230513	MOTORS	6
230515	VARIABLE FREQUENCY DRIVES (VFD)	7
230523	VALVES	4
230529	SUPPORTS AND ANCHORS	4
230548	VIBRATION ISOLATION	2
230553	MECHANICAL IDENTIFICATION	3
230593	TESTING, ADJUSTING, AND BALANCING	7
230700	PIPING AND EQUIPMENT INSULATION	3
230900	BUILDING TEMPERATURE CONTROL SYSTEM	41
232113	HYDRONIC PIPING	4
232114	UNDERGROUND PRE-INSULATED PIPING	4
232116	HYDRONIC SPECIALTIES	3
232123	PUMPS	3
232500	CHEMICAL WATER TREATMENT	7
233100	DUCTWORK	8
233410	GENERAL EXHAUST SYSTEM	3
233600	AIR TERMINAL UNITS	4
233700	AIR OUTLETS AND INLETS	3
235216	CONDENSING OUTDOOR HOT WATER GAS FIRED BOILER	4
237413	AIR HANDLING UNITS WITH COILS	6
DIVISION 26 – ELECTRICAL		
260100	BASIC ELECTRICAL REQUIREMENTS	11
260513	MEDIUM VOLTAGE CABLES	6
260519	LOW-VOLTAGE ELECTRICAL POWER CONDUCTORS AND CABLES	4
260526	GROUNDING AND BONDING FOR ELECTRICAL SYSTEMS	8
260529	HANGERS AND SUPPORTS FOR ELECTRICAL SYSTEMS	8
260533	RACEWAYS AND BOXES FOR ELECTRICAL SYSTEMS	10
260543	UNDERGROUND DUCTS AND RACEWAYS FOR ELECTRICAL SYSTEMS	13
260553	IDENTIFICATION FOR ELECTRICAL SYSTEMS	7
260572	OVERCURRENT PROTECTIVE DEVICE SHORT-CIRCUIT STUDY	6
260573	OVERCURRENT PROTECTIVE DEVICE COORDINATION STUDY	9
260574	OVERCURRENT PROTECTIVE DEVICE ARC-FLASH STUDY	7

DIVISION	SECTION TITLE	PAGES
261200	MEDIUM VOLTAGE TRANSFORMERS	5
262000	SERVICE AND DISTRIBUTION	4
262726	WIRING DEVICES	7
263213	NATURAL GAS GENERATOR SETS	12
263600	AUTOMATIC TRANSFER SWITCHES	13
264100	LIGHTNING PROTECTION SYSTEM	4
264313	TVSS FOR LOW VOLTAGE ELECTRICAL POWER CIRCUITS	6
265000	LIGHTING	4
DIVISION 27 – COMMUNICATIONS		
270000	STRUCTURED CABLING SYSTEMS	22
274100	ARCHITECTURALLY INTEGRATED AUDIOVISUAL SYSTEMS	23
275120	AREA OF RESCUE (AREA OF REFUGE)	5
DIVISION 28 – ELECTRONIC SAFETY AND SECURITY		
282000	VIDEO SURVEILLANCE SYSTEM	3
283100	FIRE DETECTION AND ALARM	15
DIVISION 31 – EARTHWORK		
310000	EARTHWORK	4
311000	SITE CLEARING	4
312001	EARTH MOVING FOR LANDSCAPE	8
313116	TERMITE CONTROL	4
316316	AUGERCAST GROUT PILING	8
DIVISION 32 – EXTERIOR IMRPOVEMENTS		
321123	AGGREGATE BASE COURSE	1
321313	CONCRETE PAVING FOR PARKING LOT	12
321313	CONCRETE PAVING FOR LANDSCAPE	10
321400	UNIT PAVING	5
321723	PAVEMENT MARKINGS AND MISCELLANEOUS SIGNING	5
328400	IRRIGATION	10
329200	TURF AND GRASS	8
329300	PLANTS	15
DIVISION 33 – UTILITIES		
331400	WATER PIPING MATERIALS AND STRUCTURES	18
333113	SANITARY SEWER GRAVITY PIPING	15
334100	CATCH BASINS AND DRAINAGE PIPE	3
334300	STORMWATER CONVEYANCE	12
GEOTECHNICAL REPORT by The Beta Group dated May 22, 2023		66
SAMPLE REPORT by Rayner Consulting Group dated May 20, 2024		43

END OF TABLE OF CONTENTS

SECTION 011000 - SUMMARY

PART 1 - GENERAL

1.1 RELATED DOCUMENTS

A. Drawings and general provisions of the Contract, including General and Supplementary Conditions and other Division 01 Specification Sections, apply to this Section.

1.2 SUMMARY

A. Section Includes:

1. Project information.
2. Work covered by Contract Documents.
3. Work performed by Owner.
4. Contractor's use of site and premises.
5. Coordination with occupants.
6. Work restrictions.
7. Specification and Drawing conventions.

1.3 DEFINITIONS

A. Work Package: A group of specifications, drawings, and schedules prepared by the design team to describe a portion of the Project Work for pricing, permitting, and construction.

1.4 PROJECT INFORMATION

A. Project Identification: New College of Business – Southern University – Baton Rouge.

B. Owner: State of Louisiana

1. Owner's Representative: **Facility Planning and Control**

C. Architect: **Coleman Partners Architects LLC and Williams Architecture – a joint venture.**

D. Web-Based Project Software: The Architect's Project software will be used for the purposes of managing communication and documents during the construction stage.

1. See Section 013100 "Project Management and Coordination." for requirements for using web-based Project software.

1.5 WORK COVERED BY CONTRACT DOCUMENTS

A. Includes, but is not limited to, the following:

1. The general scope of work relative to this project includes, but is not limited to the following:
    a) Abatement and demolition of all existing onsite structures including, but not limited to the, the existing Police Station and the adjacent Warehouse Building.
    b) Construction of a new College of Business building and other related site improvements.
    c) and other Work indicated in the Contract Documents.

B. Type of Contract:

1. Project will be constructed under a single prime contract.

1.6 WORK PERFORMED BY OWNER

A. Cooperate fully with Owner, so work may be carried out smoothly, without interfering with or delaying Work under this Contract or work by Owner. Coordinate the Work of this Contract with work performed by Owner.

B. Subsequent Work: Owner will perform the following additional work at site after Substantial Completion. Completion of that work will depend on successful completion of preparatory Work under this Contract.

1. Contractor to coordinate with the Owner the Installation of FF&E.

1.7 CONTRACTOR'S USE OF SITE AND PREMISES

A. Unrestricted Use of Site: Contractor shall have full use of Project site for construction operations during construction period. Contractor's use of Project site is limited only by Owner's right to perform work or to retain other contractors on portions of Project.

B. Limits on Use of Site: Limit use of Project site to areas within the Contract limits indicated. Do not disturb portions of Project site beyond areas in which the Work is indicated.

C. Condition of Existing Grounds: Maintain portions of existing grounds, landscaping, and hardscaping affected by construction operations throughout construction period. Repair damage caused by construction operations.

1.8 COORDINATION WITH OCCUPANTS

A. Owner Limited Occupancy of Completed Areas of Construction: Owner reserves the right to occupy and to place and install equipment in completed portions of the Work, prior to Substantial Completion of the Work, provided such occupancy does not

interfere with completion of the Work. Such placement of equipment and limited occupancy shall not constitute acceptance of the total Work.

1. Architect will prepare a Certificate of Substantial Completion and the FP&C Partial Occupancy Form for each specific portion of the Work to be occupied prior to Owner acceptance of the completed Work.
2. Obtain a Certificate of Occupancy from authorities having jurisdiction before limited Owner occupancy.
3. Before limited Owner occupancy, mechanical and electrical systems shall be fully operational, and required tests and inspections shall be successfully completed. On occupancy, Owner will operate and maintain mechanical and electrical systems serving occupied portions of Work.
4. Upon Substantial Completion, Owner will assume responsibility for maintenance and custodial service for occupied portions of Work.

1.9 WORK RESTRICTIONS

A. Comply with restrictions on construction operations.

1. Comply with limitations on use of public streets, work on public streets, rights of way, and other requirements of authorities having jurisdiction.

B. On-Site Work Hours: Limit work to between 6:00 a.m. to 10:00 p.m., Monday through Friday, Saturday, and Sunday, unless otherwise indicated. Contractor to confirm prior to Construction. Work hours may be modified to meet Project requirements if approved by Owner and authorities having jurisdiction.
   1. Hours for Utility Shutdowns: As coordinated in advance with the University.

C. On-Site Workday Restrictions: Do not perform work resulting in utility shutdowns or resulting in noisy activity on-site during work black-out days indicated in Document 003113 "Preliminary Schedules."

D. Existing Utility Interruptions: Do not interrupt utilities serving facilities occupied by Owner or others unless permitted under the following conditions and then only after arranging for temporary utility services according to requirements indicated:

1. Notify **Architect, Owner, and University** not less than seven days in advance of proposed utility interruptions.
2. Obtain University's written permission before proceeding with utility interruptions.

E. Smoking and Controlled Substance Restrictions: Use of tobacco products, alcoholic beverages, and other controlled substances on Owner's property is not permitted.

F. Employee Identification: Provide identification for Contractor personnel working on Project site. Require personnel to use identification at all times.

1.10 SPECIFICATION AND DRAWING CONVENTIONS

A. Specification Content: The Specifications use certain conventions for the style of language and the intended meaning of certain terms, words, and phrases when used in particular situations. These conventions are as follows:

1. Imperative mood and streamlined language are generally used in the Specifications. The words "shall," "shall be," or "shall comply with," depending on the context, are implied where a colon (:) is used within a sentence or phrase.
2. Text Color: Text used in the Specifications, including units of measure, manufacturer and product names, and other text may appear in multiple colors or underlined as part of a hyperlink; no emphasis is implied by text with these characteristics.
3. Hypertext: Text used in the Specifications may contain hyperlinks. Hyperlinks may allow for access to linked information that is not residing in the Specifications. Unless otherwise indicated, linked information is not part of the Contract Documents.
4. Specification requirements are to be performed by Contractor unless specifically stated otherwise.

B. Division 00 Contracting Requirements: General provisions of the Contract, including General and Supplementary Conditions, apply to all Sections of the Specifications.

C. Division 01 General Requirements: Requirements of Sections in Division 01 apply to the Work of all Sections in the Specifications.

D. Drawing Coordination: Requirements for materials and products identified on Drawings are described in detail in the Specifications. One or more of the following are used on Drawings to identify materials and products:

1. Terminology: Materials and products are identified by the typical generic terms used in the individual Specifications Sections.
2. Abbreviations: Materials and products are identified by abbreviations scheduled on Drawings and published as part of the U.S. National CAD Standard.
3. Keynoting: Materials and products are identified by reference keynotes referencing Specification Section numbers found in this Project Manual.

PART 2 - PRODUCTS (Not Used)

PART 3 - EXECUTION (Not Used)

END OF SECTION 011000

SECTION 011000 - SUMMARY OF WORK (ENVIRONMENTAL)

PART 1 GENERAL

The project is the Environmental Abatement of the William Pass Police Station and Campus Police Maintenance Shop and Selected Interior Demolition located on the Baton Rouge Southern University Campus, in Baton Rouge, Louisiana. The Project involves the removal and disposal of the asbestos-containing materials, including but not limited to the removal and disposal of flooring materials and related mastics, heater piping insulation and flue, wall and ceiling mud, window and door caulking materials, waterproofing materials, older PCB-Containing ballasts and Mercury-Containing Lamps. The project also includes the removal of certain interior finishes, walls and ceilings for access and inspection for asbestos-containing materials

RELATED DOCUMENTS

1.1 CONTRACT DOCUMENTS Related requirements and conditions that are indicated on the Contract Documents include but are not necessarily limited to the following.

Applicable codes and regulations.
Notices and permits.
Existing site conditions and restrictions on use of the site.
Requirements for Owner occupancy during the Contractor Work.
Williams and Coleman Partner Contract Documents

1.2 SUMMARY BY REFERENCES Work of the Contract can be summarized by references to this Scope of Work. Work of the Contract is also unavoidably affected or influenced by governing regulations, natural phenomenon including weather conditions and other forces outside the Contract Documents.

1.3 SUMMARY OF SITE CONDITIONS: The Contractor shall verify site conditions, scope of work, and requirements of the Project. The Contractor is responsible for obtaining all permits prior to the removal of asbestos, PCB's and Mercury and coordination with the Demolition Contractor and Designer through the completion of the Work. The Contractor is responsible for the safety of his workers and to ensure 100% tie-off when using scaffolding.

The Contractor is informed that the Work is located within the Designated Site boundary limits of the William Pass Police Station and Adjacent Warehouse, located on the Baton Rouge Southern University Campus, in Baton Rouge, Louisiana. Power and water are available at the Site however the Contractor is responsible for supplying necessary electrical power and water to the Work Areas to complete the Work.

1.4 SCOPE OF WORK AND PHASING: The Scope of Work includes the safe removal and disposal of the asbestos-containing materials, including but not limited to the removal and disposal of flooring materials and related mastics, heater piping insulation and flue, wall and ceiling mud, window and door caulking materials, waterproofing materials,

older PCB-Containing ballasts and Mercury-Containing Lamps. The project also includes the removal of certain interior finishes, walls and ceilings for access and inspection for asbestos-containing materials.

The Contractor shall protect the building structure and components schedule to remain, utility connections, fencing, paving and drives at all times. Any areas damaged outside the scope of Work, including but not limited to sidewalks, driveways, adjacent buildings, landscaping, etc., shall be replaced to their original condition at no cost to the Owner. The Contractor shall salvage materials whenever possible, recycle materials when possible. Utilities are available on Site and the Contractor is responsible for supplying necessary electrical power and water to the Work Areas to complete the Work. Specifically, the Contractor shall perform the following work items:

ENVIRONMENTAL SHEET NOTES – WILLIAM PASS POLICE STATION (S02139):

1. THE CONTRACTOR SHALL NOTE: THE SCOPE OF WORK AND WORK ITEMS INCLUDED WITHIN THE CONTRACT DOCUMENTS, DRAWING SHEETS AND NOTES, SPECIFICATIONS AND GENERAL NOTES ARE A PART OF THE SCOPE OF WORK FOR THIS PROJECT AND ALL WORK WITHIN THESE ENVIRONMENTAL DOCUMENTS SHALL BE PERFORMED BY A CONTRACTOR LICENSED TO REMOVE AND DISPOSE OF ASBESTOS-CONTAINING MATERIALS; USING SAFE AND WORKMANSHIP-LIKE METHODS. ALL ASBESTOS-CONTAINING MATERIALS SHALL BE REMOVED PRIOR TO BUILDING DEMOLITION.

2. THE CONTRACTOR SHALL PROTECT THE ADJACENT SIDEWALKS AND STREETS THAT WILL REMAIN AND BE UTILIZED DURING THE ASBESTOS REMOVAL WORK. THE CONTRACTORS' OPERATIONS SHALL NOT BLOCK OR DISRUPT THE SCHOOL OPERATIONS.

3. THE CONTRACTOR SHALL NOTE: ELECTRICAL SERVICE PANELS AND EQUIPMENT MAY REMAIN ENERGIZED THROUGH OUT THE DURATION OF THE ENVIRONMENTAL PHASE OF THE WORK AND SHALL BE PROTECTED. THE CONTRACTOR SHALL COORDINATE WITH THE GENERAL DEMOLITION CONTRACTOR PRIOR TO DISCONNECTING POWER TO THE WORK AREA AND PRIOR TO PERFORMING WORK UTILIZING GFI CIRCUITS. THE CONTRACTOR SHALL UTILIZE A LICENSED ELECTRICIAN TO LOCKOUT/ TAGOUT ELECTRICAL TO THE WORK AREAS.

4. THE CONTRACTOR SHALL REMOVE THE REMAINING BUILDING CONTENTS AS NECESSARY FOR ACCESS TO ASBESTOS CONTAINING MATERIALS; RECYCLE MATERIALS WHEREVER POSSIBLE.

5. THE CONTRACTOR (AT THE DIRECTION OF THE GENERAL CONTRACTOR) SHALL REMOVE REMAINING BUILDING EQUIPMENT AND MATERIALS AND DISPOSED OF AS CONSTRUCTION DEBRIS. THE OWNER HAS FIRST RIGHT OF REFUSAL. THE CONTRACTOR SHALL NOTE: ITEMS NOT REMOVED BY THE OWNER AND REMAINING IN THE BUILDING SHALL BE DISPOSED OF OR SALVAGED/RECYCLED BY THE CONTRACTOR. THE CONTRACTOR SHALL PREPARE A LISTING OF THESE MATERIALS RECYCLED OR SALVAGED. THE REMAINING CLEANING RELATED CHEMICALS, WAXES, MAINTENANCE RELATED SOLUTIONS, AND PAINTS SHALL BE REMOVED AND DISPOSED OF IN ACCORDANCE WITH FEDERAL AND STATE REGULATIONS.

6. THE CONTRACTOR SHALL REMOVE THE MUD AND TEXTURE MATERIALS FROM THE DRYWALL/GYPSUM/SHEET ROCK WALLS THROUGHOUT AND RELATED LOOSE DEBRIS

MATERIALS AND DISPOSE OF AS ASBESTOS-CONTAINING MATERIALS IN ACCORDANCE WITH SECTIONS 028210 AND 028240

7. THE CONTRACTOR SHALL REMOVE THE MUD AND TEXTURE MATERIALS FROM THE GYPSUM/SHEET ROCK CEILING SURFACES THROUGHOUT AND DISPOSE OF AS ASBESTOS-CONTAINING MATERIALS IN ACCORDANCE WITH SECTIONS 028210 AND 028240.

8. THE CONTRACTOR SHALL REMOVE THE OLDER REMAINING FLOOR TILE AND BLACK MASTIC MATERIALS AND LEVELLING COMPOUND TO A CLEANED CONCRETE SURFACE AND DISPOSE OF AS ASBESTOS-CONTAINING MATERIAL IN ACCORDANCE WITH SECTIONS 028210 AND 028240. THE CONTRACTOR SHALL NOTE: NEWER NON-ASBESTOS FLOORING COVERS OLDER FLOORING MASTICS EXIST IN AREAS OF THE BUILDING; ALL LAYERS SHALL BE REMOVED TO A CLEANED CONCRETE SURFACE AND DISPOSED OF AS ASBESTOS-CONTAINING IN ACCORDANCE WITH SECTIONS 028210 AND 028240.

9. THE CONTRACTOR SHALL REMOVE DEMOLISH ONE FACE OF ALL WET WALLS, DOUBLE WALLS, CHASE WALLS, PIPING SHAFTS, CEILINGS, FURR DOWN AND FURR OUT WALLS AND CEILINGS IN THEIR ENTIRETY TO ACCESS AND REMOVE PIPING INSULATION, FITTINGS AND DEBRIS MATERIAL; INCLUDING BUT NOT LIMITED TO THE PIPE/PLUMBING CHASES, HEATER PIPE CHASES, PLUMBING RISER CHASES, VERTICAL CHASE WALLS, CEILING PLASTER FURRDOWN CHASES, RESTROOM, MECHANICAL ROOMS AND JANITOR ROOM WALLS TO ACCESS AND REMOVE INSULATED PIPING. CHASE OPENINGS SHALL BE CREATED TO ALLOW FOR A COMPLETE CAVITY INSPECTION AND TO PERMIT THE COMPLETE REMOVAL OF ALL INSULATED PIPING MATERIALS AND RELATED LOOSE DEBRIS MATERIALS.

10. THE CONTRACTOR SHALL REMOVE THE RESTROOM MIRRORS, CERAMIC SURFACES, PLUMBING FIXTURES TO ACCESS GLUE DOTS/MASTICS AND DISPOSE OF AS ASBESTOS-CONTAINING MATERIALS IN ACCORDANCE WITH SECTIONS 028210 AND 028240.

11. THE CONTRACTOR SHALL REMOVE THE GLUE DOTS FROM WALL MOUNTED MESSAGE BOARDS AND DISPOSE OF AS ASBESTOS-CONTAINING MATERIAL IN ACCORDANCE WITH SECTIONS 028210 AND 028240.

12. THE CONTRACTOR SHALL REMOVE THE HVAC EQUIPMENT AND DUCTS (AS NECESSARY) FOR ACCESS TO ASBESTOS-CONTAINING MATERIALS; REMOVE IN THEIR ENTIRETY FOR ACCESS. THE REMAINING HVAC EQUIPMENT MAY BE DISPOSED OF AS CONSTRUCTION DEBRIS. RECYCLE MATERIALS WHENEVER POSSIBLE.

13. THE CONTRACTOR SHALL REMOVE THE OLDER FLUORESCENT LIGHTING FIXTURES AND DISPOSE OF THE OLDER BALLASTS AS PCB-CONTAINING IN ACCORDANCE WITH SECTION 02 83 40. THE REMAINING FIXTURE MAY BE DISPOSED OF AS CONSTRUCTION DEBRIS. RECYCLE WHENEVER POSSIBLE. THE CONTRACTOR SHALL REMOVE THE OLDER MERCURY LIGHT TUBES, SWITCHES AND THERMOSTATS AND DISPOSE OF IN ACCORDANCE WITH SECTIONS 028340 AND 028500.

14. THE CONTRACTOR SHALL REMOVE EXTERIOR WALL WATERPROOFING/MEMBRANE FLASHING MATERIALS (ON EXTERIOR WALLS BENEATH WINDOWS AND AT THE SLAB AND GRADE BEAM LEVELS AND DISPOSE OF AS ASBESTOS-CONTAINING MATERIAL IN ACCORDANCE WITH SECTIONS 028210 AND 028240.

15. THE CONTRACTOR SHALL COORDINATE WITH THE GENERAL DEMOLITION AND REMOVE THE UNDERGROUND GAS SERVICE PIPE COATING AND DISPOSE OF IN ACCORDANCE WITH SECTIONS 028210 AND 028240.

ENVIRONMENTAL SHEET NOTES – CAMPUS POLICE/MAINTENANCE SHOP (S02162):

1. THE CONTRACTOR SHALL NOTE: THE SCOPE OF WORK AND WORK ITEMS INCLUDED WITHIN THE CONTRACT DOCUMENTS, DRAWING SHEETS AND NOTES, SPECIFICATIONS AND GENERAL NOTES ARE A PART OF THE SCOPE OF WORK FOR THIS PROJECT AND ALL WORK WITHIN THESE ENVIRONMENTAL DOCUMENTS SHALL BE PERFORMED BY A CONTRACTOR LICENSED TO REMOVE AND DISPOSE OF ASBESTOS-CONTAINING MATERIALS; USING SAFE AND WORKMANSHIP-LIKE METHODS. ALL ASBESTOS-CONTAINING MATERIALS SHALL BE REMOVED PRIOR TO BUILDING DEMOLITION.

2. THE CONTRACTOR SHALL PROTECT THE ADJACENT SIDEWALKS AND STREETS THAT WILL REMAIN AND BE UTILIZED DURING THE ASBESTOS REMOVAL WORK. THE CONTRACTORS' OPERATIONS SHALL NOT BLOCK OR DISRUPT THE SCHOOL OPERATIONS.

3. THE CONTRACTOR SHALL NOTE: ELECTRICAL SERVICE PANELS AND EQUIPMENT MAY REMAIN ENERGIZED THROUGH OUT THE DURATION OF THE ENVIRONMENTAL PHASE OF THE WORK AND SHALL BE PROTECTED. THE CONTRACTOR SHALL COORDINATE WITH THE GENERAL DEMOLITION CONTRACTOR PRIOR TO DISCONNECTING POWER TO THE WORK AREA AND PRIOR TO PERFORMING WORK UTILIZING GFI CIRCUITS. THE CONTRACTOR SHALL UTILIZE A LICENSED ELECTRICIAN TO LOCKOUT/ TAGOUT ELECTRICAL TO THE WORK AREAS.

4. THE CONTRACTOR SHALL REMOVE THE REMAINING BUILDING CONTENTS AS NECESSARY FOR ACCESS TO ASBESTOS CONTAINING MATERIALS; RECYCLE MATERIALS WHEREVER POSSIBLE.

5. THE CONTRACTOR (AT THE DIRECTION OF THE GENERAL CONTRACTOR) SHALL REMOVE REMAINING BUILDING EQUIPMENT AND MATERIALS AND DISPOSED OF AS CONSTRUCTION DEBRIS. THE OWNER HAS FIRST RIGHT OF REFUSAL. THE CONTRACTOR SHALL NOTE: ITEMS NOT REMOVED BY THE OWNER AND REMAINING IN THE BUILDING SHALL BE DISPOSED OF OR SALVAGED/RECYCLED BY THE CONTRACTOR. THE CONTRACTOR SHALL PREPARE A LISTING OF THESE MATERIALS RECYCLED OR SALVAGED. THE REMAINING CLEANING RELATED CHEMICALS, WAXES, MAINTENANCE RELATED SOLUTIONS, AND PAINTS SHALL BE REMOVED AND DISPOSED OF IN ACCORDANCE WITH FEDERAL AND STATE REGULATIONS.

6. THE CONTRACTOR SHALL REMOVE THE OLDER REMAINING FLOOR TILE AND BLACK MASTIC MATERIALS AND LEVELLING COMPOUND TO A CLEANED CONCRETE SURFACE AND DISPOSE OF AS ASBESTOS-CONTAINING MATERIAL IN ACCORDANCE WITH SECTIONS 028210 AND 028240. THE CONTRACTOR SHALL NOTE: NEWER NON-ASBESTOS FLOORING COVERS OLDER FLOORING MASTICS EXIST IN AREAS OF THE BUILDING; ALL LAYERS SHALL BE REMOVED TO A CLEANED CONCRETE SURFACE AND DISPOSED OF AS ASBESTOS-CONTAINING IN ACCORDANCE WITH SECTIONS 028210 AND 028240.

7. THE CONTRACTOR SHALL REMOVE DEMOLISH ONE FACE OF ALL WET WALLS, DOUBLE WALLS, CHASE WALLS, PIPING SHAFTS, CEILINGS, FURR DOWN AND FURR OUT WALLS AND CEILINGS IN THEIR ENTIRETY TO ACCESS AND REMOVE PIPING INSULATION, FITTINGS, FLASHING AND WATERPROOFING AND DEBRIS MATERIAL; INCLUDING BUT NOT LIMITED TO

THE PIPE/PLUMBING CHASES, HEATER PIPE CHASES, PLUMBING RISER CHASES, VERTICAL CHASE WALLS, CEILING PLASTER FURRDOWN CHASES, RESTROOM, MECHANICAL ROOMS AND JANITOR ROOM WALLS TO ACCESS AND REMOVE INSULATED PIPING. CHASE OPENINGS SHALL BE CREATED TO ALLOW FOR A COMPLETE CAVITY INSPECTION AND TO PERMIT THE COMPLETE REMOVAL OF ALL INSULATED PIPING MATERIALS AND RELATED LOOSE DEBRIS MATERIALS.

8. THE CONTRACTOR SHALL REMOVE THE WAREHOUSE HEATER PIPING INSULATION MATERIALS AND FLUE(S) AND DISPOSE OF AS ASBESTOS-CONTAINING MATERIAL IN ACCORDANCE WITH SECTIONS 028210 AND 028240.

9. THE CONTRACTOR SHALL REMOVE THE RESTROOM MIRRORS, CERAMIC SURFACES, PLUMBING FIXTURES TO ACCESS GLUE DOTS/MASTICS AND DISPOSE OF AS ASBESTOS-CONTAINING MATERIALS IN ACCORDANCE WITH SECTIONS 028210 AND 028240.

10. THE CONTRACTOR SHALL REMOVE THE GLUE DOTS FROM WALL MOUNTED MESSAGE BOARDS AND DISPOSE OF AS ASBESTOS-CONTAINING MATERIAL IN ACCORDANCE WITH SECTIONS 028210 AND 028240

11. THE CONTRACTOR SHALL REMOVE THE OLDER FLUORESCENT LIGHTING FIXTURES AND DISPOSE OF THE OLDER BALLASTS AS PCB-CONTAINING IN ACCORDANCE WITH SECTION 02 83 40. THE REMAINING FIXTURE MAY BE DISPOSED OF AS CONSTRUCTION DEBRIS. RECYCLE WHENEVER POSSIBLE. THE CONTRACTOR SHALL REMOVE THE OLDER MERCURY LIGHT TUBES AND DISPOSE OF IN ACCORDANCE WITH SECTIONS 028340 AND 028500.

12. THE CONTRACTOR SHALL REMOVE EXTERIOR WALL WATERPROOFING/MEMBRANE FLASHING MATERIALS (ON EXTERIOR WALLS BENEATH WINDOWS, AT THE ROOF LEVEL AND AT THE SLAB GRADE BEAM LEVELS AND DISPOSE OF AS ASBESTOS-CONTAINING MATERIAL IN ACCORDANCE WITH SECTIONS 028210 AND 028240.

13. THE CONTRACTOR SHALL REMOVE THE ASBESTOS-CONTAINING GLAZING AND FRAME CAULK FROM THE WINDOWS AND DOORS AND DISPOSE OF AS ASBESTOS-CONTAINING MATERIALS IN ACCORDANCE WITH SECTIONS 028210 AND 028240.

14. THE CONTRACTOR SHALL COORDINATE WITH THE GENERAL DEMOLITION AND REMOVE THE UNDERGROUND GAS SERVICE PIPE COATING AND DISPOSE OF IN ACCORDANCE WITH SECTIONS 028210 AND 028240.

15. THE CONTRACTOR SHALL COORDINATE WITH THE GENERAL CONTRACTOR PRIOR TO REMOVING THE EXTERIOR VENT PIPES MOUNTED TO THE BUILDING (NOTE TO BE REVISED IF IT IS DETERMINED UST'S EXIST)

GENERAL ENVIRONMENTAL NOTES:

1. THE CONTRACTOR SHALL ISOLATE THE WORK AREAS, POST WARNING SIGNS, LOCKOUT AND TAG THE ELECTRICAL SYSTEM AS DESCRIBED IN SECTION 028210, ESTABLISH DECONTAMINATION FACILITIES, AND PERFORM ALL PREABATEMENT ACTIVITIES AS DESCRIBED IN SECTIONS 028210 AND 028240.

2. THE CONTRACTOR SHALL PROVIDE TEMPORARY POWER AND LIGHTING EQUIPPED WITH GROUND FAULT INTERRUPTER (GFI) DEVICES TO ALL WORK AREAS AS DESCRIBED IN SECTIONS 028210 AND 028240. CONNECTIONS FOR TEMPORARY POWER FROM PERMANENT SERVICES ARE TO BE PERFORMED BY A QUALIFIED ELECTRICIAN. THE CONTRACTOR SHALL COORDINATE WITH THE GENERAL CONTRACTOR PRIOR TO PERFORMING SHUTDOWNS OR TIE-INS.

3. THE CONTRACTOR SHALL ENSURE THAT ALL EMPLOYEES UTILIZE PROPER PROCEDURES FOR RESPIRATORY AND PERSONNEL PROTECTION AND DECONTAMINATION PROCEDURES AS DESCRIBED IN SECTIONS 028210 AND 028240.

4. THE CONTRACTOR SHALL INSTALL AND ERECT SUFFICIENT SCAFFOLDING AND/OR WORK PLATFORMS TO ACCESS ALL AREAS AND COMPLETE ALL TASKS RELATED TO THE ENVIRONMENTAL ABATEMENT AND SELECTED DEMOLITION. INSTALLATION, ERECTION AND USE OF SCAFFOLDING AND WORK PLATFORMS AND MANLIFTS SHALL BE PERFORMED IN STRICT COMPLIANCE WITH APPLICABLE FEDERAL, STATE AND LOCAL LAWS AND REGULATIONS, AS DESCRIBED IN SECTIONS 028210 AND 028240; INCLUDING BUT NOT LIMITED TO DAILY INSPECTIONS OF SCAFFOLDING AND WORK PLATFORMS AND SAFETY TRAINING MEETINGS AND 100% TIE-OFF FOR ALL WORKERS.

5. THE CONTRACTOR SHALL INSTALL RIGID BARRIER WALLS AND CAULK AND SEAL CONNECTIONS TO THE EXISTING WALLS, FLOOR, AND DECK AS REQUIRED AS DESCRIBED IN SECTIONS 028210 AND 028240. REFER TO DETAILS FOR RIGID BARRIER WALLS. THE CONTRACTOR SHALL REMOVE ALL RIGID BARRIER WALLS AFTER RECEIPT OF WRITTEN APPROVAL FROM THE ENVIRONMENTAL CONSULTANT. ALL MATERIALS USED SHALL BE FIRE RETARDANT.

6. THE CONTRACTOR SHALL PROTECT THE ELECTRICAL SYSTEM SERVICE, SERVICE CONDUITS AND PANELS, UTILITY PIPING SYSTEMS, ROOF STORM WATER, DRAINS AND PIPING SYSTEMS DURING THE ENVIRONMENTAL PHASE OF WORK. THE CONTRACTOR SHALL COORDINATE IN ADVANCE WITH THE GENERAL CONTRACTOR PRIOR TO THE REMOVAL OF ANY BUILDING SYSTEM COMPONENT.

7. THE CONTRACTOR SHALL UTILIZE PROPER ENGINEERING CONTROLS AND CONDUCT PERSONNEL MONITORING THROUGHOUT THE ENVIRONMENTAL PHASE OF THE PROJECT IN ACCORDANCE WITH SECTIONS 028210 AND 028240.

8. THE CONTRACTOR SHALL INSTALL HEPA-FILTERED EXHAUST SYSTEMS AS DESCRIBED IN SECTIONS 028210 AND 028240

9. THE CONTRACTOR SHALL INSTALL AUTOMATIC AIR PRESSURE DIFFERENTIAL RECORDING INSTRUMENTS IN THE WORK AREAS AS DESCRIBED IN SECTIONS 028210 AND 028240

10. THE CONTRACTOR SHALL MAINTAIN EMERGENCY EXITS AS DESCRIBED IN SECTIONS 028210 AND 028240.

11. BEFORE COMMENCING WORK WITHIN THE WORK AREA, THE CONTRACTOR SHALL INSPECT THE WORK ENCLOSURE FOR BREACHES AND LEAKS AS DESCRIBED IN SECTIONS 028210 AND 028240. THE CONTRACTOR SHALL SEAL PROPERLY ANY LEAKS BEFORE BEGINNING WORK.

12. AFTER THE WORK AREAS HAVE BEEN PREPARED, THE CONTRACTOR SHALL REQUEST A FORMAL SITE INSPECTION BY THE ENVIRONMENTAL CONSULTANT AND ASSIST THE ENVIRONMENTAL CONSULTANT IN THEIR EFFORTS TO SMOKE TEST/INSPECT THE CONTAINMENT FOR LEAKS. THE CONTRACTOR SHALL NOT COMMENCE REMOVAL OR OTHER DISTURBANCE OF ASBESTOS-CONTAINING MATERIALS, UNTIL THE ENVIRONMENTAL CONSULTANT HAS INSPECTED AND APPROVED THE SITE PREPARATION WORK.

13. THE CONTRACTOR SHALL SCHEDULE WASTE DISPOSAL IN ADVANCE WITH THE GENERAL CONTRACTOR.

14. THE CONTRACTOR SHALL ENSURE THAT ALL BUILDING COMPONENTS AND EQUIPMENT SCHEDULED TO REMAIN FOR THE DEMOLITION CONTRACTORS' USE AND SALVAGE AND FOR THE PROTECTION OF THE BUILDING IS CLEANED OF ALL ASBESTOS MATERIALS AND PROTECTED DURING THE ENVIRONMENTAL REMOVAL PHASE.

15. THE CONTRACTOR SHALL CLEAN (AS NECESSARY), REMOVE AND DISPOSE OF THE MECHANICAL AND ELECTRICAL EQUIPMENT, WALLS, CEILINGS AND FIXED FURNITURE AND CABINETS TO OBTAIN ACCESS TO THE ASBESTOS-CONTAINING MATERIALS. IF AN ITEM CANNOT BE PROPERLY CLEANED, THE CONTRACTOR SHALL DISPOSE OF IT AS AN ASBESTOS-CONTAMINATED MATERIAL. THE MECHANICAL AND ELECTRICAL EQUIPMENT WHICH IS CLEANED BY THE CONTRACTOR SHALL BE INSPECTED VISUALLY BY THE ENVIRONMENTAL CONSULTANT BEFORE THE CONTRACTOR IS PERMITTED TO REMOVE IT FROM THE WORK AREA.

16. THE CONTRACTOR SHALL SEAL ALL OPENINGS THROUGH WALLS, SLAB/DECK AND ROOF THAT EXIST OR WILL BE CREATED BY THE REMOVAL PROCESS TO PROTECT THE SAFETY OF WORKERS AND THE INTEGRITY OF THE CONTAINMENT.

17. THE CONTRACTOR SHALL FIELD VERIFY THE QUANTITY OF ASBESTOS-CONTAINING MATERIALS TO BE REMOVED AND DISPOSED OF THE QUANTITY OF MECHANICAL AND ELECTRICAL EQUIPMENT AND PIPING TO BE CLEANED AND DISPOSED OF AND QUANTITY OF WALLS, FLOORS, AND MOVEABLE OBJECTS TO BE REMOVED AND DISPOSED OF. SALVAGE MATERIALS WHEREVER POSSIBLE. THE CONTRACTOR SHALL ENSURE ALL ASBESTOS-CONTAINING MATERIALS ARE REMOVED PRIOR TO BUILDING DEMOLITION WITH THE EXCEPTION OF WATERPROOFING FELT LAYERS BENEATH STRUCTURAL CONCRETE GRADE BEAMS AND SLABS TO BE REMOVED AND DISPOSED OF ONCE THESE MATERIALS ARE EXPOSED.

18. THE CONTRACTOR SHALL COMPLETE ALL SELECTED DEMOLITION WORK OF WALLS, CEILINGS, CHASES AND SURROUNDS FOR ACCESS AND FOR REMOVAL OF THE ASBESTOS-CONTAINING AND CONTAMINATED MATERIALS IN A MANNER THAT PERMITS COMPLETE REMOVAL AND THE FULL INSPECTION OF THE WORK. ALL ASBESTOS-CONTAINING MATERIALS SHALL BE REMOVED PRIOR TO BUILDING DEMOLITION (BY OTHERS).

19. THE CONTRACTOR SHALL NOTE: THE SCOPE OF WORK AND WORK ITEMS INCLUDED WITHIN THESE GENERAL NOTES AND THE SHEET NOTES ARE A PART OF THE SCOPE OF WORK FOR THIS PROJECT AND ALL WORK SHALL BE PERFORMED USING WORKMANSHIP-LIKE METHODS.

20. FINAL AIR TESTING SHALL BE PERFORMED PURSUANT TO THE UNITED STATES ENVIRONMENTAL PROTECTION AGENCY 40 CFR PART 763 (APPENDIX A) USING

TRANSMISSION ELECTRON MICROSCOPY (TEM), AGGRESSIVE DISTURBANCE PROCEDURES, CONTINUOUS AIR CIRCULATION, AND HEPA-FILTERED EXHAUST.

21. THE CONTRACTOR SHALL MAINTAIN PROPER FEDERAL AND STATE LICENSING TO CONDUCT HAZARDOUS MATERIAL REMOVAL AND DISPOSAL AS DESCRIBED WITHIN THESE DOCUMENTS.

The Contractor is responsible for obtaining all permits prior to environmental abatement of the building and removal and termination of utilities and drainage (as necessary). Contractor is responsible for the necessary provisions for delivering continuous clean air to the Work Area during the activities related to the work activities associated with the actual removal and disposal of asbestos-containing materials, lead-containing coating, removal and disposal of lighting fixtures that contain PCB-Containing ballasts and Mercury-Containing lamps. At this time, there are no materials to be salvaged by the Owner. The Contractor shall certify that he is licensed under the provisions of LA R.S. 37:2150 through 37:2192 and state his license number on the bid submission. The Proposer hereby agrees to commence work under this Contract on a date specified by the Owner and to fully complete the project within the Contract date thereafter.

The Contractor shall be responsible for proper and safe disposal of all materials designated and record keeping and reporting in accordance with applicable federal, state, and local regulations. The Contractor shall notify the Architect of any items encountered during excavation.

1.5 WORK INCLUDED

The asbestos abatement and related Renovation Work Activities may be performed simultaneously but will be separated by barriers and containment areas. This Contractor shall plan his work and the work of his subcontractors and suppliers in a manner to avoid conflict with the general Renovation Work Activities and to effect timely sequencing of his work within the overall construction schedule.

A. RESPONSIBILITIES: Responsibilities are delineated as follows:

Environmental Abatement and Selected Interior Demolition - By this Contractor.

Fire Security and Fire Watch– By this Contractor.

Air Monitoring – Owner will obtain a third-party independent testing laboratory to provide air monitoring, inspection and clearance testing; reimbursed by the Owner referred to the "Owners Representative", "Environmental Consultant" or third-party air monitoring firm.

Owners Representative - the Asbestos Designer, the third-Party Air monitoring firm and the Environmental Consultant.
Security – By this Contractor; in accordance with his Site-Specific Safety and Security Plan.

B. FIRE SECURITY - No activity that requires a flame or heat exceeding the flash point of any onsite material will be permitted. Smoking within the building will not be permitted at any time. Fire Security shall be conducted in accordance with the Contractor site specific safety and security plan.

C. COORDINATION - The Contractor shall designate a key person, who shall be responsible for the coordination of the Contractor's Work with the Work of the General Contractor.

1.6 GENERAL AND ADMINISTRATIVE REQUIREMENTS are set forth in but not limited to, the following specification sections:

011100 Summary of the Work

1.7 HAZARDOUS MATERIAL REMOVAL WORK PROCEDURES are described in the following specification sections:

028210 Removal of Asbestos-Containing Materials
028240 Disposal of Asbestos Containing Waste Material
028340 Removal and Disposal of Polychlorinated Biphenyls (PCB – Containing) Ballasts
028500 Removal and Disposal of Mercury Containing Fluorescent Light Tubes

1.8 INSPECTION EXISTING BUILDING CONDITIONS

Prior to commencement of work, the Contractor shall inspect areas in which work will be performed. Photograph or videotape existing conditions as necessary to document conditions. Submit to Designer with Final Report.

The Contractor shall note the existing building conditions and the contaminated condition of the ceiling cavity. All debris materials shall be considered asbestos-containing and handled as such in accordance with Sections 028210 and 028240.

1.9 POTENTIAL ASBESTOS HAZARD

The disturbance or dislocation of asbestos-containing materials may cause asbestos fibers to be released into the building's atmosphere, thereby creating a potential health hazard to workmen and building occupants. The Contractor shall apprise all workers, supervisory personnel, subcontractors and consultants who will be at the job site of the seriousness of the hazard and of proper work procedures, which must be followed.

1.10 CONTRACTORS USE OF PREMISES

General: The Contractor shall limit his use of the premises to the work indicated, to allow for Owner occupancy and use by the public, adjacent to the Site. The Contractor shall meet the following:

A. Confine operations at the site to the areas permitted under the Contract. Portions of the site beyond areas on which work is indicated are not to be

disturbed. Conform to site rules and regulations affecting the work while engaged in project construction.

B. Keep existing driveways and entrances serving the premises clear and available to Owner and his employees at all times. Do not use these areas for parking or storage sheds to the areas for parking or storage of materials.

C. Do not unreasonably encumber the site with materials or equipment. Confine stockpiling of materials and location of storage sheds to the areas indicated. If additional storage is necessary, obtain and pay for such storage off site.

D. Lock automotive type vehicles, such as passenger cars and trucks and other mechanized or motorized construction equipment, when parked and unattended, to prevent unauthorized use. Do not leave such vehicles or equipment unattended with the motor running or ignition key in place or accessible to unauthorized persons.

1.11 CONTRACTORS USE OF EXISTING BUILDINGS

The Contractor shall repair damage caused by remediation and interior demolition operations. Take all precautions necessary to protect the building and its occupants during the remediation and interior demolition operation. The Contractor shall meet the following:

A. Keep means of egress such as hallways, stairs, free from accumulation of waste, rubbish or construction debris.

B. Smoking or open fires will not be permitted within the building enclosure or on the premises.

C. Existing toilets within the building shall not be used by the Contractor and his personnel.

1.12 SUBMITTALS DURING THE WORK Submit one (1) electric copy of the following items to the Environmental Consultant:

A. Security and safety logs, showing names of any persons entering the work area, date and time of entry and exit. Record any accident, emergency evacuation, and any other safety or health incident. If requested, these logs shall be provided to the Environmental Consultant daily.

B. Waste disposal certificates, (including bills of lading) and weight tickets. Copies (reproductions) shall be submitted on a weekly basis, with completed original certificates submitted upon receipt from the landfill.

C Third Party Monitoring and clearance reports, OSHA-compliance personnel air monitoring results, as conducted by the Contractor.

D. Re-notifications to required agencies, if there are schedule changes.

E. The Submittals described within paragraphs 1.14 and 1.15 shall be submitted to the Environmental Consultant within three (3) weeks from the date of field completion of the Work.

1.13 STOP WORK

If the Designer presents a written stop work order the Contractor shall immediately stop all work. Do not re-commence work until authorized in writing by Designer.

Standby time and testing costs required to resolve violations shall be at the Contractor's expense. Stop Work Orders may be issued for, but shall not be limited to the following:

A. Failure to apply properly and continuously specified removal work procedures.

B. Failure to maintain specified work area isolation, sealing, and protective systems.

C. Failure to apply sufficient amended water before, during, and after removal and cleanup of asbestos-containing or mold-containing materials, including the packaging of waste and demolition materials.

D. Loss of specified differential pressures and/or adequate flow of air through the Decontamination Facility (if required).

E. Failure to use proper respiratory protection equipment (as required).

F. Failure to maintain any required records or to conduct OSHA-required personal exposure monitoring tests and/or make results promptly available to the Environmental Consultant.

G. Work stoppage because of a lack of phasing coordination.

1.14 ASBESTOS AND LEAD - CONTAINING MATERIALS Asbestos and Lead-containing materials are known to be present at the work site. The Contractor is responsible for the safe removal of these materials:

Dry Wall and Ceilings	2% to 3% Chrysotile
Window Caulk	2%-4% Chrysotile
Door Frame Caulk	2%-4% Chrysotile

1.15 CONTRACTORS USE OF PREMISES

General: The Contractor shall limit his use of the premises to the work indicated, so as to allow for Owner occupancy and use by the public.

A. Confine operations at the site to the areas permitted under the Contract. Portions of the site beyond areas on which work is indicated are not to be disturbed. Conform to site rules and regulations affecting the work while engaged in project construction. No material or vehicle shall be stored within ten

(10) feet of the drip line of any Live Oak Tree.

B. Keep existing driveways and entrances serving the premises clear and available to Owner and his employees at all times. Do not use these areas for parking or storage sheds to the areas for parking or storage of materials.

C. Do not unreasonably encumber the site with materials or equipment. Confine stockpiling of materials and location of storage sheds to the areas indicated. If additional storage is necessary, obtain and pay for such storage off site.

D. Lock automotive type vehicles, such as passenger cars and trucks and other mechanized or motorized construction equipment, when parked and unattended, to prevent unauthorized use. Do not leave such vehicles or equipment unattended with the motor running or ignition key in place or accessible to unauthorized persons.

1.16 CONTRACTORS TEMPORARY FACILITIES

The Contractor shall maintain temporary facilities necessary to perform the Work. And make all precautions necessary to protect the existing Site during the construction period.

A. Keep Site free from accumulation of waste, rubbish or construction debris.

B. Smoking or open fires will not be permitted within the building enclosure or on the premises.

C. Contractor shall supply temporary toilets for his personnel and Site visitors.

1.17 OWNER OCCUPANCY

The Owner will occupy adjacent buildings, parking areas and drives during the entire period of construction. Cooperate fully with the Owner or his representative during construction operations to minimize conflicts and to facilitate Owner usage. Perform the work so as not to interfere with the Owner's operation and renovation work.

PART 2.0 - PRODUCTS (NOT APPLICABLE)

PART 3.0 - EXECUTION (NOT APPLICABLE)

END OF SECTION 011000

SECTION 012300 - ALTERNATES

PART 1 - GENERAL

1.1 RELATED DOCUMENTS

A. Drawings and general provisions of the Contract, including General and Supplementary Conditions and other Division 01 Specification Sections, apply to this Section.

1.2 SUMMARY

A. Section includes administrative and procedural requirements for alternates.

1.3 DEFINITIONS

A. Alternate: An amount proposed by bidders and stated on the Bid Form for certain work defined in the bidding requirements that may be added to the base bid amount if the Owner decides to accept a corresponding change either in the amount of construction to be completed or in the products, materials, equipment, systems, or installation methods described in the Contract Documents.

1. Alternates described in this Section are part of the Work only if enumerated in the Agreement.
2. The cost for each alternate is the net addition to the Contract Sum to incorporate alternates into the Work. No other adjustments are made to the Contract Sum.

1.4 PROCEDURES

A. Coordination: Revise or adjust affected adjacent work as necessary to completely integrate work of the alternate into Project.

1. Include, as part of each alternate, miscellaneous devices, accessory objects, and similar items incidental to or required for a complete installation, whether or not indicated as part of alternate.

B. Execute accepted alternates under the same conditions as other Work of the Contract.

C. Schedule: A Part 3 "Schedule of Alternates" Article is included at the end of this Section. Specification Sections referenced in schedule contain requirements for materials necessary to achieve the work described under each alternate.

PART 2 - PRODUCTS (Not Used)

PART 3 - EXECUTION

3.1 SCHEDULE OF ALTERNATES

A. Alternate No. One: Added Wood-Look Ceilings at the 2nd and 3rd Floors and Added Operable Partitions at the 1st Floor Multipurpose Rooms.

1. Base Bid: The Base Bid Scope of Work Shall include painted gypsum board ceilings in lieu of linear metal ceilings at the 2nd and 3rd floors as indicated on Drawings 1/A11.02 and 1/A11.03.
   a. Alternate: The Contractor shall install linear metal ceilings at the 2nd and 3rd floors in lieu of painted gypsum board ceilings as indicated on Drawings 1/A11.02 and 1/A11.03 and as specified in Section 095423 "Linear Metal Ceilings."
2. Base Bid: The Base Bid Scope of Work Shall include interior curtainwall framing separating Lobby 100 and Multipurpose Rooms 109, 110, and 111 and type "A2" partitions separating Multipurpose Rooms 109, 110, and 111 as indicated on drawing 1/A2.01.
   a. Alternate: The Contractor shall install operable glass partitions separating Lobby 100 and Multipurpose Rooms 109, 110, and 111 and operable glass partitions separating Multipurpose Rooms 109, 110, and 111 as indicated on drawing 1/A2.01 and Sheet A4.41 and as specified in Sections 102226 and 102239.

B. Alternate No. Two: Added Landscape and Hardscape Scope of Work, Added Site Furnishings.

1. Base Bid: The Base Bid Scope of Work Shall include only pedestrian-rated concrete paving and lawn areas (sodded and hydroseeded). All planting areas indicated on the Landscape Drawings shall be sodded lawn. All unit paving areas indicated on the Landscape Drawings shall be pedestrian rated concrete.
   a. Alternate: Scope of work shall include all planting areas, berms, precast concrete seat walls, unit paving, and site furnishings as indicated on the Landscape Drawings.

C. Alternate No. Three: Construction of Clerestory Roof.

1. Base Bid: The Base Bid Scope of Work Shall include only the main roof structure, not including the clerestory roof structure as indicated on the Architectural Roof Plan, Building Sections, Wall Sections and Details, and Structural Drawings.
   a. Alternate: The Contractor shall include the cost to construct the clerestory roof with all associated components, including but not limited to, associated roof framing per the Structural Drawings, associated roof decking, insulation and SBS roofing system, associated roof overhang (fascia and soffit) associated 3" thick insulated metal wall panel cladding, and associated storefront windows.

END OF SECTION 012300

SECTION 012500 - SUBSTITUTION PROCEDURES

PART 1 - GENERAL

1.1 RELATED DOCUMENTS

A. Drawings and general provisions of the Contract, including General and Supplementary Conditions and other Division 01 Specification Sections, apply to this Section.

1.2 SUMMARY

A. Section includes administrative and procedural requirements for substitutions. Substitutions for Convenience after Bid Opening and during Construction are not allowed.

1.3 DEFINITIONS

A. Substitutions: Changes in products, materials, equipment, and methods of construction from those required by the Contract Documents.

1. Substitutions for Cause: Changes proposed by Contractor that are required due to changed Project conditions, such as unavailability of product, regulatory changes, or unavailability of required warranty terms.
2. Substitutions for Convenience: Changes proposed by Contractor or Owner that are not required to meet other Project requirements but may offer advantage to Contractor or Owner.

1.4 ACTION SUBMITTALS

A. Substitution Requests: Submit documentation identifying product or fabrication or installation method to be replaced. Include Specification Section number and title and Drawing numbers and titles.

1. Substitution Request Form: Use form acceptable to Architect.
2. Documentation: Show compliance with requirements for substitutions and the following, as applicable:

    a. Statement indicating why specified product or fabrication or installation method cannot be provided, if applicable.
    b. Coordination of information, including a list of changes or revisions needed to other parts of the Work and to construction performed by Owner and separate contractors that will be necessary to accommodate proposed substitution.

c. Detailed comparison of significant qualities of proposed substitutions with those of the Work specified. Include annotated copy of applicable Specification Section. Significant qualities may include attributes, such as performance, weight, size, durability, visual effect, sustainable design characteristics, warranties, and specific features and requirements indicated. Indicate deviations, if any, from the Work specified.
d. Product Data, including drawings and descriptions of products and fabrication and installation procedures.
e. Samples, where applicable or requested.
f. Certificates and qualification data, where applicable or requested.
g. List of similar installations for completed projects, with project names and addresses as well as names and addresses of architects and owners.
h. Material test reports from a qualified testing agency, indicating and interpreting test results for compliance with requirements indicated.
i. Research reports evidencing compliance with building code in effect for Project, from ICC-ES.
j. Detailed comparison of Contractor's construction schedule using proposed substitutions with products specified for the Work, including effect on the overall Contract Time. If specified product or method of construction cannot be provided within the Contract Time, include letter from manufacturer, on manufacturer's letterhead, stating date of receipt of purchase order, lack of availability, or delays in delivery.
k. Cost information, including a proposal of change, if any, in the Contract Sum.
l. Contractor's certification that proposed substitution complies with requirements in the Contract Documents, except as indicated in substitution request, is compatible with related materials and is appropriate for applications indicated.
m. Contractor's waiver of rights to additional payment or time that may subsequently become necessary because of failure of proposed substitution to produce indicated results.

3. Architect's Action: If necessary, Architect will request additional information or documentation for evaluation within seven days of receipt of a request for substitution. Architect will notify Contractor of acceptance or rejection of proposed substitution within 15 days of receipt of request, or seven days of receipt of additional information or documentation, whichever is later.

a. Forms of Acceptance: Change Order, Construction Change Directive, or Architect's Supplemental Instructions for minor changes in the Work.

1.5 QUALITY ASSURANCE

A. Compatibility of Substitutions: Investigate and document compatibility of proposed substitution with related products and materials. Engage a qualified testing agency to perform compatibility tests recommended by manufacturers.

1.6 PROCEDURES

A. Coordination: Revise or adjust affected work as necessary to integrate work of the approved substitutions.

1.7 SUBSTITUTIONS

A. Substitutions for Cause: Submit requests for substitution immediately on discovery of need for change, but not later than 15 days prior to time required for preparation and review of related submittals.

1. Conditions: Architect will consider Contractor's request for substitution when the following conditions are satisfied. If the following conditions are not satisfied, Architect will return requests without action, except to record noncompliance with these requirements:

a. Requested substitution is consistent with the Contract Documents and will produce indicated results.
b. Substitution request is fully documented and properly submitted.
c. Requested substitution will not adversely affect Contractor's construction schedule.
d. Requested substitution has received necessary approvals of authorities having jurisdiction.
e. Requested substitution is compatible with other portions of the Work.
f. Requested substitution has been coordinated with other portions of the Work.
g. Requested substitution provides specified warranty.
h. If requested substitution involves more than one contractor, requested substitution has been coordinated with other portions of the Work, is uniform and consistent, is compatible with other products, and is acceptable to all contractors involved.

B. Substitutions for Convenience: Not allowed unless otherwise indicated.

PART 2 - PRODUCTS (Not Used)

PART 3 - EXECUTION (Not Used)

END OF SECTION 012500

SECTION 012600 - CONTRACT MODIFICATION PROCEDURES

PART 1 - GENERAL

1.1 RELATED DOCUMENTS

A. Drawings and general provisions of the Contract, including General and Supplementary Conditions and other Division 01 Specification Sections, apply to this Section.

1.2 SUMMARY

A. Section includes administrative and procedural requirements for handling and processing Contract modifications.

B. Related Requirements:

1. Section 012500 "Substitution Procedures" for administrative procedures for handling requests for substitutions made after the Contract award.
2. Section 013100 "Project Management and Coordination" for requirements for forms for contract modifications provided as part of web-based Project management software.

1.3 MINOR CHANGES IN THE WORK

A. Architect will issue supplemental instructions authorizing minor changes in the Work, not involving adjustment to the Contract Sum or the Contract Time, on AIA Document G710.

1.4 PROPOSAL REQUESTS

A. Owner-Initiated Proposal Requests: Architect will issue a detailed description of proposed changes in the Work that may require adjustment to the Contract Sum or the Contract Time. If necessary, the description will include supplemental or revised Drawings and Specifications.

1. Work Change Proposal Requests issued by Architect are not instructions either to stop work in progress or to execute the proposed change.
2. Within time specified in Proposal Request or 20 days, when not otherwise specified, after receipt of Proposal Request, submit a quotation estimating cost adjustments to the Contract Sum and the Contract Time necessary to execute the change.

a. Include a list of quantities of products required or eliminated and unit costs, with total amount of purchases and credits to be made. If requested, furnish survey data to substantiate quantities.
b. Indicate applicable taxes, delivery charges, equipment rental, and amounts of trade discounts.
c. Include costs of labor and supervision directly attributable to the change.
d. Include an updated Contractor's construction schedule that indicates the effect of the change, including, but not limited to, changes in activity duration, start and finish times, and activity relationship. Use available total float before requesting an extension of the Contract Time.
e. Quotation Form: Use forms acceptable to Architect.

B. Contractor-Initiated Proposals: If latent or changed conditions require modifications to the Contract, Contractor may initiate a claim by submitting a request for a change to Architect.

1. Include a statement outlining reasons for the change and the effect of the change on the Work. Provide a complete description of the proposed change. Indicate the effect of the proposed change on the Contract Sum and the Contract Time.
2. Include a list of quantities of products required or eliminated and unit costs, with total amount of purchases and credits to be made. If requested, furnish survey data to substantiate quantities.
3. Indicate applicable taxes, delivery charges, equipment rental, and amounts of trade discounts.
4. Include costs of labor and supervision directly attributable to the change.
5. Include an updated Contractor's construction schedule that indicates the effect of the change, including, but not limited to, changes in activity duration, start and finish times, and activity relationship. Use available total float before requesting an extension of the Contract Time.
6. Comply with requirements in Section 012500 "Substitution Procedures" if the proposed change requires substitution of one product or system for product or system specified.
7. Proposal Request Form: Use form acceptable to Architect.

1.5 CHANGE ORDER PROCEDURES

A. On Owner's approval of a Work Change Proposal Request, Architect will issue a Change Order for signatures of Owner and Contractor on form included in Project Manual.

1.6 CONSTRUCTION CHANGE DIRECTIVE

A. Construction Change Directive: Architect may issue a Construction Change Directive on AIA Document G714. Construction Change Directive instructs Contractor to proceed with a change in the Work, for subsequent inclusion in a Change Order.

1. Construction Change Directive contains a complete description of change in the Work. It also designates method to be followed to determine change in the Contract Sum or the Contract Time.

B. Documentation: Maintain detailed records on a time and material basis of work required by the Construction Change Directive.

1. After completion of change, submit an itemized account and supporting data necessary to substantiate cost and time adjustments to the Contract.

PART 2 - PRODUCTS (Not Used)

PART 3 - EXECUTION (Not Used)

END OF SECTION 012600

SECTION 012900 - PAYMENT PROCEDURES

PART 1 - GENERAL

1.1 RELATED DOCUMENTS

A. Drawings and general provisions of the Contract, including General and Supplementary Conditions and other Division 01 Specification Sections, apply to this Section.

1.2 SUMMARY

A. Section includes administrative and procedural requirements necessary to prepare and process Applications for Payment.

1.3 DEFINITIONS

A. Schedule of Values: A statement furnished by Contractor allocating portions of the Contract Sum to various portions of the Work and used as the basis for reviewing Contractor's Applications for Payment.

1.4 SCHEDULE OF VALUES

A. Coordination: Coordinate preparation of the schedule of values with preparation of Contractor's construction schedule.

1. Coordinate line items in the schedule of values with items required to be indicated as separate activities in Contractor's construction schedule.
2. Submit the schedule of values to Architect at earliest possible date, **but no later the Pre-Construction Conference.**

B. Format and Content: Use the FP& C Schedule of Values Form to establish line items for the schedule of values. Provide a line item for each Specification Section and where applicable, provide a further breakdown for labor and materials.

1. Arrange schedule of values per the FP& C Schedule of Values Form.

2. Provide a breakdown of the Contract Sum in enough detail to facilitate continued evaluation of Applications for Payment and progress reports. Provide multiple line items for principal subcontract amounts in excess of five percent of the Contract Sum.
3. Provide a separate line item in the schedule of values for each part of the Work where Applications for Payment may include materials or equipment purchased or fabricated and stored on-site, but not yet installed.

a. Differentiate between items stored on-site.
   1) Billing for items stored off-site is not allowed.

4. Allowances: Provide a separate line item in the schedule of values for each allowance. Show line-item value of unit-cost allowances, as a product of the unit cost, multiplied by measured quantity. Use information indicated in the Contract Documents to determine quantities.
5. Overhead Costs, Proportional Distribution: Include total cost and proportionate share of general overhead and profit for each line item.
6. Overhead Costs, Separate Line Items: Show cost of temporary facilities and other major cost items that are not direct cost of actual work-in-place as separate line items.
7. Temporary Facilities: Show cost of temporary facilities and other major cost items that are not direct cost of actual work-in-place as separate line items.
8. Closeout Costs. Include separate line items under Contractor and principal subcontracts for Project closeout requirements in an amount totaling five percent of the Contract Sum and subcontract amount.
9. Schedule of Values Revisions: Revise the schedule of values when Change Orders or Construction Change Directives result in a change in the Contract Sum. Include at least one separate line item for each Change Order and Construction Change Directive.

1.5 APPLICATIONS FOR PAYMENT

A. Each Application for Payment following the initial Application for Payment shall be consistent with previous applications and payments, as certified by Architect and paid for by Owner.

B. Payment Application Times: Submit Application for Payment to Architect by the last of the month. The period covered by each Application for Payment is one month, ending on the last day of the month.

1. Submit draft copy of Application for Payment five days prior to due date for review by Architect.

C. Application for Payment Forms: Use FP&C Application for Payment Form as form for Applications for Payment.

D. Application Preparation: Complete every entry on form. Execute by a person authorized to sign legal documents on behalf of Contractor. Architect will return incomplete applications without action.

1. Entries shall match data on the schedule of values and Contractor's construction schedule. Use updated schedules if revisions were made.
2. Include amounts for work completed following previous Application for Payment, whether or not payment has been received. Include only amounts for work completed at time of Application for Payment.
3. Include amounts of Change Orders and Construction Change Directives issued before last day of construction period covered by application.

4. Indicate separate amounts for work being carried out under Owner-requested project acceleration.

E. Stored Materials: Include in Application for Payment amounts applied for materials or equipment purchased or fabricated and stored on-site but not yet installed. Billing for items stored off-site is not allowed.

1. Provide certificate of insurance, evidence of transfer of title to Owner, and consent of surety to payment for stored materials.
2. Provide supporting documentation that verifies amount requested, such as paid invoices. Match amount requested with amounts indicated on documentation; do not include overhead and profit on stored materials.
3. Provide summary documentation for stored materials indicating the following:

    a. Value of materials previously stored and remaining stored as of date of previous Applications for Payment.
    b. Value of previously stored materials put in place after date of previous Application for Payment and on or before date of current Application for Payment.
    c. Value of materials stored since date of previous Application for Payment and remaining stored as of date of current Application for Payment.

F. Transmittal: Submit three signed original or electronic copies of each Application for Payment to Architect by a method ensuring receipt within 24 hours. One copy shall include waivers of lien and similar attachments.

1. Transmit each copy with a transmittal form listing attachments and recording appropriate information about application.

G. Before Pre-Construction Conference: Administrative actions and submittals that must precede or coincide with submittal of first Application for Payment include the following:

1. List of subcontractors.
2. Labor burden for Contractor and all subcontractors.
3. Schedule of values.
4. Contractor's construction schedule (preliminary if not final).
5. Products list (preliminary if not final).
6. Sustainable design action plans, including preliminary project materials cost data.
7. Schedule of unit prices.
8. Submittal schedule (preliminary if not final).
9. List of Contractor's staff assignments.
10. List of Contractor's principal consultants.
11. Copies of authorizations and licenses from authorities having jurisdiction for performance of the Work.

H. Application for Payment at Substantial Completion: After Architect issues the Certificate of Substantial Completion, submit an Application for Payment showing 100 percent completion for portion of the Work claimed as substantially complete.

1. Include documentation supporting claim that the Work is substantially complete and a statement showing an accounting of changes to the Contract Sum.

    a. Complete administrative actions, submittals, and Work preceding this application, as described in Section 017700 "Closeout Procedures."

2. This application shall reflect Certificate(s) of Substantial Completion issued previously for Owner occupancy of designated portions of the Work.

I. Final Payment Application: After completing Project closeout requirements, submit final Application for Payment with releases and supporting documentation not previously submitted and accepted, including, but not limited, to the following:

1. Evidence of completion of Project closeout requirements.
2. Certification of completion of final punch list items.
3. Insurance certificates for products and completed operations where required and proof that taxes, fees, and similar obligations were paid.
4. Updated final statement, accounting for final changes to the Contract Sum.
5. Original Clear Lien Certificate
6. AIA Document G706.
7. AIA Document G706A.
8. AIA Document G707.
9. Evidence that claims have been settled.
10. Final meter readings for utilities, a measured record of stored fuel, and similar data as of date of Substantial Completion or when Owner took possession of and assumed responsibility for corresponding elements of the Work.
11. Final liquidated damages settlement statement.
12. Proof that taxes, fees, and similar obligations are paid.
13. Waivers and releases.

PART 2 - PRODUCTS (Not Used)

PART 3 - EXECUTION (Not Used)

END OF SECTION 012900

SECTION 013100 - PROJECT MANAGEMENT AND COORDINATION

PART 1 - GENERAL

1.1 RELATED DOCUMENTS

A. Drawings and general provisions of the Contract, including General and Supplementary Conditions and other Division 01 Specification Sections, apply to this Section.

1.2 SUMMARY

A. Section includes administrative provisions for coordinating construction operations on Project, including, but not limited to, the following:

1. General coordination procedures.
2. Coordination drawings.
3. RFIs.
4. Digital project management procedures.
5. Web-based Project management software package.
6. Project meetings.

1.3 DEFINITIONS

A. BIM: Building Information Modeling.

B. RFI: Request for Information. Request from Owner, Architect, or Contractor seeking information required by or clarifications of the Contract Documents.

1.4 INFORMATIONAL SUBMITTALS

A. Subcontract List: Prepare a written summary identifying individuals or firms proposed for each portion of the Work, including those who are to furnish products or equipment fabricated to a special design. Include the following information in tabular form:

1. Name, address, telephone number, and email address of entity performing subcontract or supplying products.
2. Number and title of related Specification Section(s) covered by subcontract.
3. Drawing number and detail references, as appropriate, covered by subcontract.

B. Key Personnel Names: Before the Pre-Construction Conference, submit a list of key personnel assignments, including superintendent and other personnel in attendance at Project site. Identify individuals and their duties and responsibilities; list addresses, cellular telephone numbers, and e-mail addresses. Provide names, addresses, and

telephone numbers of individuals assigned as alternates in the absence of individuals assigned to Project.

1. Post copies of list in Project meeting room, in temporary field office, and in Architect's web-based Project software directory.

1.5 GENERAL COORDINATION PROCEDURES

A. Coordination: Coordinate construction operations included in different Sections of the Specifications to ensure efficient and orderly installation of each part of the Work. Coordinate construction operations included in different Sections that depend on each other for proper installation, connection, and operation.

1. Schedule construction operations in sequence required to obtain the best results, where installation of one part of the Work depends on installation of other components, before or after its own installation.
2. Coordinate installation of different components to ensure maximum performance and accessibility for required maintenance, service, and repair.
3. Make adequate provisions to accommodate items scheduled for later installation.

B. Prepare memoranda for distribution to each party involved, outlining special procedures required for coordination. Include such items as required notices, reports, and list of attendees at meetings.

1. Prepare similar memoranda for Owner and separate contractors if coordination of their Work is required.

C. Administrative Procedures: Coordinate scheduling and timing of required administrative procedures with other construction activities to avoid conflicts and to ensure orderly progress of the Work. Such administrative activities include, but are not limited to, the following:

1. Preparation of Contractor's construction schedule.
2. Preparation of the schedule of values.
3. Installation and removal of temporary facilities and controls.
4. Delivery and processing of submittals.
5. Progress meetings.
6. Preinstallation conferences.
7. Project closeout activities.
8. Startup and adjustment of systems.

1.6 COORDINATION DRAWINGS

A. Coordination Drawings, General: Prepare coordination drawings according to requirements in individual Sections, and additionally where installation is not completely indicated on Shop Drawings, where limited space availability necessitates coordination, or if coordination is required to facilitate integration of products and materials fabricated or installed by more than one entity.

1. Content: Project-specific information, drawn accurately to a scale large enough to indicate and resolve conflicts. Do not base coordination drawings on standard printed data. Include the following information, as applicable:

    a. Use applicable Drawings as a basis for preparation of coordination drawings. Prepare sections, elevations, and details as needed to describe relationship of various systems and components.
    b. Coordinate the addition of trade-specific information to coordination drawings by multiple contractors in a sequence that best provides for coordination of the information and resolution of conflicts between installed components before submitting for review.
    c. Indicate functional and spatial relationships of components of architectural, structural, civil, mechanical, and electrical systems.
    d. Indicate space requirements for routine maintenance and for anticipated replacement of components during the life of the installation.
    e. Show location and size of access doors required for access to concealed dampers, valves, and other controls.
    f. Indicate required installation sequences.
    g. Indicate dimensions shown on Drawings. Specifically note dimensions that appear to be in conflict with submitted equipment and minimum clearance requirements. Provide alternative sketches to Architect indicating proposed resolution of such conflicts. Minor dimension changes and difficult installations will not be considered changes to the Contract.

B. Coordination Drawing Organization: Organize coordination drawings as follows:

1. Floor Plans and Reflected Ceiling Plans: Show architectural and structural elements, and mechanical, plumbing, fire-protection, fire-alarm, and electrical Work. Show locations of visible ceiling-mounted devices relative to acoustical ceiling grid. Supplement plan drawings with section drawings where required to adequately represent the Work.
2. Plenum Space: Indicate subframing for support of ceiling, and wall systems, mechanical and electrical equipment, and related Work. Locate components within plenums to accommodate layout of light fixtures and other components indicated on Drawings. Indicate areas of conflict between light fixtures and other components.
3. Mechanical Rooms: Provide coordination drawings for mechanical rooms, showing plans and elevations of mechanical, plumbing, fire-protection, fire-alarm, and electrical equipment.
4. Structural Penetrations: Indicate penetrations and openings required for all disciplines.
5. Slab Edge and Embedded Items: Indicate slab edge locations and sizes and locations of embedded items for metal fabrications, sleeves, anchor bolts, bearing plates, angles, door floor closers, slab depressions for floor finishes, curbs and housekeeping pads, and similar items.
6. Mechanical and Plumbing Work: Show the following:

    a. Sizes and bottom elevations of ductwork, piping, and conduit runs, including insulation, bracing, flanges, and support systems.

b. Dimensions of major components, such as dampers, valves, diffusers, access doors, cleanouts and electrical distribution equipment.
c. Fire-rated enclosures around ductwork.

7. Electrical Work: Show the following:

a. Runs of vertical and horizontal conduit 1-1/4 inches (32 mm) in diameter and larger.
b. Light fixture, exit light, emergency battery pack, smoke detector, and other fire-alarm locations.
c. Panel board, switchboard, switchgear, transformer, busway, generator, and motor-control center locations.
d. Location of pull boxes and junction boxes, dimensioned from column center lines.

8. Fire-Protection System: Show the following:

a. Locations of standpipes, mains piping, branch lines, pipe drops, and sprinkler heads.

9. Review: Architect will review coordination drawings to confirm that, in general, the Work is being coordinated, but not for the details of the coordination, which are Contractor's responsibility. If Architect determines that coordination drawings are not being prepared in sufficient scope or detail, or are otherwise deficient, Architect will so inform Contractor, who shall make suitable modifications and resubmit.

C. Coordination Digital Data Files: Prepare coordination digital data files according to the following requirements:

1. File Preparation Format:

a. Same digital data software program, version, and operating system as original Drawings.

2. BIM File Incorporation: Develop and incorporate coordination drawing files into BIM established for Project.

a. Perform three-dimensional component conflict analysis as part of preparation of coordination drawings. Resolve component conflicts prior to submittal. Indicate where conflict resolution requires modification of design requirements by Architect.

3. Architect will furnish Contractor one set of digital data files of Drawings for use in preparing coordination digital data files.

a. Architect makes no representations as to the accuracy or completeness of digital data files as they relate to Drawings.
b. Digital Data Software Program: Drawings are available in Revit.
c. Contractor shall execute a data licensing agreement in the form of AIA Document C106.

1.7 REQUEST FOR INFORMATION (RFI)

A. General: Immediately on discovery of the need for additional information, clarification, or interpretation of the Contract Documents, Contractor shall prepare and submit an RFI in the form specified.

1. Architect will return without response those RFIs submitted to Architect by other entities controlled by Contractor.
2. Coordinate and submit RFIs in a prompt manner to avoid delays in Contractor's work or work of subcontractors.

B. Content of the RFI: Include a detailed, legible description of item needing information or interpretation and the following:

1. Project name.
2. Owner name.
3. Owner's Project number.
4. Name of Architect.
5. Architect's Project number.
6. Date.
7. Name of Contractor.
8. RFI number, numbered sequentially.
9. RFI subject.
10. Specification Section number and title and related paragraphs, as appropriate.
11. Drawing number and detail references, as appropriate.
12. Field dimensions and conditions, as appropriate.
13. Contractor's suggested resolution. If Contractor's suggested resolution impacts the Contract Time or the Contract Sum, Contractor shall state impact in the RFI.
14. Contractor's signature.
15. Attachments: Include sketches, descriptions, measurements, photos, Product Data, Shop Drawings, coordination drawings, and other information necessary to fully describe items needing interpretation.

    a. Include dimensions, thicknesses, structural grid references, and details of affected materials, assemblies, and attachments on attached sketches.

C. RFI Forms: Software-generated form with substantially the same content as indicated above, acceptable to Architect.

1. Attachments shall be electronic files in PDF format.

D. Architect's Action: Architect will review each RFI, determine action required, and respond. Allow 10 calendar days for Architect's response for each RFI. RFIs received by Architect after 1:00 p.m. will be considered as received the following working day.

1. The following Contractor-generated RFIs will be returned without action:

    a. Requests for approval of submittals.
    b. Requests for approval of substitutions.
    c. Requests for approval of Contractor's means and methods.

d. Requests for coordination information already indicated in the Contract Documents.
e. Requests for adjustments in the Contract Time or the Contract Sum.
f. Requests for interpretation of Architect's actions on submittals.
g. Incomplete RFIs or inaccurately prepared RFIs.

2. Architect's action may include a request for additional information, in which case Architect's time for response will date from time of receipt by Architect of additional information.
3. Architect's action on RFIs that may result in a change to the Contract Time or the Contract Sum may be eligible for Contractor to submit Change Proposal according to Section 012600 "Contract Modification Procedures."

a. If Contractor believes the RFI response warrants change in the Contract Time or the Contract Sum, notify Architect in writing within 5 days of receipt of the RFI response.

E. RFI Log: Prepare, maintain, and submit a tabular log of RFIs organized by the RFI number. Submit log weekly.

F. On receipt of Architect's action, update the RFI log and immediately distribute the RFI response to affected parties. Review response and notify Architect within three days if Contractor disagrees with response.

1.8 DIGITAL PROJECT MANAGEMENT PROCEDURES

A. Use of Architect's Digital Data Files: Digital data files of Architect's CAD drawings will be provided by Architect for Contractor's use during construction.

1. Digital data files may be used by Contractor in preparing coordination drawings, Shop Drawings, and Project Record Drawings.
2. Architect makes no representations as to the accuracy or completeness of digital data files as they relate to Contract Drawings.
3. Digital Drawing Software Program: Contract Drawings are available.
4. Contractor shall execute a data licensing agreement in the form of AIA Document C106 Digital Data Licensing Agreement.

a. Subcontractors and other parties granted access by Contractor to Architect's digital data files shall execute a data licensing agreement in the form of AIA Document C106.

B. Web-Based Project Management Software Package: Use Architect's web-based Project management software package for purposes of hosting and managing Project communication and documentation until Final Completion.

1. Web-based Project management software includes, at a minimum, the following features:

a. Compilation of Project data, including Contractor, subcontractors, Architect, Architect's consultants, Owner, and other entities involved in Project. Include names of individuals and contact information.
b. Access control for each entity for each workflow process, to determine entity's digital rights to create, modify, view, and print documents.
c. Document workflow planning, allowing customization of workflow between project entities.
d. Creation, logging, tracking, and notification for Project communications required in other Specification Sections, including, but not limited to, RFIs, submittals, Minor Changes in the Work, Construction Change Directives, and Change Orders.
e. Track status of each Project communication in real time, and log time and date when responses are provided.
f. Procedures for handling PDFs or similar file formats, allowing markups by each entity. Provide security features to lock markups against changes once submitted.
g. Processing and tracking of payment applications.
h. Processing and tracking of contract modifications.
i. Creating and distributing meeting minutes.
j. Document management for Drawings, Specifications, and coordination drawings, including revision control.
k. Management of construction progress photographs.
l. Mobile device compatibility, including smartphones and tablets.

C. PDF Document Preparation: Where PDFs are required to be submitted to Architect, prepare as follows:

1. Assemble complete submittal package into a single indexed file, incorporating submittal requirements of a single Specification Section and transmittal form with links enabling navigation to each item.
2. Name file with submittal number or other unique identifier, including revision identifier.
3. Certifications: Where digitally submitted certificates and certifications are required, provide a digital signature with digital certificate on where indicated.

1.9 PROJECT MEETINGS

A. General: Schedule and conduct meetings and conferences at Project site unless otherwise indicated.

1. Attendees: Inform participants and others involved, and individuals whose presence is required, of date and time of each meeting. Notify Owner and Architect of scheduled meeting dates and times a minimum of seven days prior to meeting.
2. Agenda: Prepare the meeting agenda. Distribute the agenda to all invited attendees.
3. Minutes: The Designer will record significant discussions and agreements achieved, and will distribute the meeting minutes to everyone concerned, including Owner and Contractor, within three days of the meeting.

B. Preconstruction Conference: Schedule and conduct a preconstruction conference before starting construction, at a time convenient to Owner and Architect, but no later than the Notice to Proceed Date.

1. Attendees: Authorized representatives of Owner, Architect, and their consultants; Contractor and its superintendent; major subcontractors; suppliers; and other concerned parties shall attend the conference. Participants at the conference shall be familiar with Project and authorized to conclude matters relating to the Work.
2. Agenda: Discuss items listed in the FP&C Pre-Construction Conference Agenda.
3. Minutes: The Designer will record and distribute meeting minutes.

C. Preinstallation Conferences: Conduct a preinstallation conference at Project site before each construction activity when required by other Sections and when required for coordination with other construction.

1. Attendees: Installer and representatives of manufacturers and fabricators involved in or affected by the installation and its coordination or integration with other materials and installations that have preceded or will follow, shall attend the meeting. Advise Architect of scheduled meeting dates.
2. Agenda: Review progress of other construction activities and preparations for the particular activity under consideration, including requirements for the following:

    a. Contract Documents.
    b. Options.
    c. Related RFIs.
    d. Related Change Orders.
    e. Purchases.
    f. Deliveries.
    g. Submittals.
    h. Review of mockups.
    i. Possible conflicts.
    j. Compatibility requirements.
    k. Time schedules.
    l. Weather limitations.
    m. Manufacturer's written instructions.
    n. Warranty requirements.
    o. Compatibility of materials.
    p. Acceptability of substrates.
    q. Temporary facilities and controls.
    r. Space and access limitations.
    s. Regulations of authorities having jurisdiction.
    t. Testing and inspecting requirements.
    u. Installation procedures.
    v. Coordination with other work.
    w. Required performance results.
    x. Protection of adjacent work.
    y. Protection of construction and personnel.

3. Record significant conference discussions, agreements, and disagreements, including required corrective measures and actions.
4. Reporting: Distribute minutes of the meeting to each party present and to other parties requiring information.
5. Do not proceed with installation if the conference cannot be successfully concluded. Initiate whatever actions are necessary to resolve impediments to performance of the Work and reconvene the conference at earliest feasible date.

D. Project Closeout Conference: Schedule and conduct a project closeout conference, at a time convenient to Owner and Architect, but no later than 90 days prior to the scheduled date of Substantial Completion.

1. Conduct the conference to review requirements and responsibilities related to Project closeout.
2. Attendees: Authorized representatives of Owner, Architect, and their consultants; Contractor and its superintendent; major subcontractors; suppliers; and other concerned parties shall attend the meeting. Participants at the meeting shall be familiar with Project and authorized to conclude matters relating to the Work.
3. Agenda: Discuss items listed in the FP&C Pre-Closeout Conference Agenda.

4. Minutes: The Designer will record and distribute meeting minutes.

E. Progress Meetings: Conduct progress meetings at weekly intervals.

1. Coordinate dates of meetings with preparation of payment requests.
2. Attendees: In addition to the Architect, each contractor, subcontractor, supplier, and other entity concerned with current progress or involved in planning, coordination, or performance of future activities shall be represented at these weekly meetings. All participants at the meeting shall be familiar with Project and authorized to conclude matters relating to the Work.
   a. Representatives of the Owner to attend monthly meetings.
3. Agenda: Review and correct or approve minutes of previous progress meeting. Review other items of significance that could affect progress. Include topics for discussion as appropriate to status of Project.

   a. Contractor's Construction Schedule: Review progress since the last meeting. Determine whether each activity is on time, ahead of schedule, or behind schedule, in relation to Contractor's construction schedule. Determine how construction behind schedule will be expedited; secure commitments from parties involved to do so. Discuss whether schedule revisions are required to ensure that current and subsequent activities will be completed within the Contract Time.

      1) Review schedule for next period.

   b. Review present and future needs of each entity present, including the following:

      1) Interface requirements.

2) Sequence of operations.
3) Status of submittals.
4) Deliveries.
5) Off-site fabrication.
6) Access.
7) Site use.
8) Temporary facilities and controls.
9) Progress cleaning.
10) Quality and work standards.
11) Status of correction of deficient items.
12) Field observations.
13) Status of RFIs.
14) Status of Proposal Requests.
15) Pending changes.
16) Status of Change Orders.
17) Pending claims and disputes.
18) Documentation of information for payment requests.

4. Minutes: The Designer will record and distribute the meeting minutes to each party present and to parties requiring information.

   a. Schedule Updating: Revise Contractor's construction schedule after each progress meeting, where revisions to the schedule have been made or recognized. Issue revised schedule concurrently with the report of each meeting.

PART 2 - PRODUCTS (Not Used)

PART 3 - EXECUTION (Not Used)

END OF SECTION 013100

SECTION 013300 - SUBMITTAL PROCEDURES

PART 1 - GENERAL

1.1 SUMMARY

A. Section Includes:

1. Submittal schedule requirements.
2. Administrative and procedural requirements for submittals.

1.2 DEFINITIONS

A. Action Submittals: Written and graphic information and physical samples that require Architect's responsive action. Action submittals are those submittals indicated in individual Specification Sections as "action submittals."

B. Informational Submittals: Written and graphic information and physical samples that do not require Architect's responsive action. Submittals may be rejected for not complying with requirements. Informational submittals are those submittals indicated in individual Specification Sections as "informational submittals."

1.3 SUBMITTAL SCHEDULE

A. Submittal Schedule: Submit, as an action submittal, a list of submittals, arranged in chronological order by dates required by construction schedule. Include time required for review, ordering, manufacturing, fabrication, and delivery when establishing dates. Include additional time required for making corrections or revisions to submittals noted by Architect and additional time for handling and reviewing submittals required by those corrections.

1. Coordinate submittal schedule with list of subcontracts, the schedule of values, and Contractor's construction schedule.
2. Initial Submittal Schedule: Submit concurrently with startup construction schedule. Include submittals required during the first 60 days of construction. List those submittals required to maintain orderly progress of the Work and those required early because of long lead time for manufacture or fabrication.
3. Final Submittal Schedule: Submit concurrently with the first complete submittal of Contractor's construction schedule.

    a. Submit revised submittal schedule as required to reflect changes in current status and timing for submittals.

4. Format: Arrange the following information in a tabular format:

    a. Scheduled date for first submittal.

b. Specification Section number and title.
c. Submittal Category: Action; informational.
d. Name of subcontractor.
e. Description of the Work covered.
f. Scheduled date for Architect's final release or approval.
g. Scheduled dates for purchasing.
h. Scheduled date of fabrication.
i. Scheduled dates for installation.
j. Activity or event number.

1.4 SUBMITTAL FORMATS

A. Submittal Information: Include the following information in each submittal:

1. Project name.
2. Date.
3. Name of Architect.
4. Name of Construction Manager.
5. Name of Contractor.
6. Name of firm or entity that prepared submittal.
7. Names of subcontractor, manufacturer, and supplier.
8. Unique submittal number, including revision identifier. Include Specification Section number with sequential alphanumeric identifier and alphanumeric suffix for resubmittals.
9. Category and type of submittal.
10. Submittal purpose and description.
11. Number and title of Specification Section, with paragraph number and generic name for each of multiple items.
12. Drawing number and detail references, as appropriate.
13. Indication of full or partial submittal.
14. Location(s) where product is to be installed, as appropriate.
15. Other necessary identification.
16. Remarks.
17. Signature of transmitter.

B. Options: Identify options requiring selection by Architect.

C. Deviations and Additional Information: On each submittal, clearly indicate deviations from requirements in the Contract Documents, including minor variations and limitations; include relevant additional information and revisions, other than those requested by Architect on previous submittals. Indicate by highlighting on each submittal or noting on attached separate sheet.

D. Electronic Submittals: Prepare submittals as PDF package, incorporating complete information into each PDF file. Name PDF file with submittal number.

1.5 SUBMITTAL PROCEDURES

A. Prepare and submit submittals required by individual Specification Sections. Types of submittals are indicated in individual Specification Sections.

1. Email: Prepare submittals as PDF package and transmit to Architect by sending via email. Include PDF transmittal form. Include information in email subject line as requested by Architect.

    a. Architect will return annotated file. Annotate and retain one copy of file as a digital Project Record Document file.

B. Coordination: Coordinate preparation and processing of submittals with performance of construction activities.

1. Coordinate each submittal with fabrication, purchasing, testing, delivery, other submittals, and related activities that require sequential activity.
2. Submit all submittal items required for each Specification Section concurrently unless partial submittals for portions of the Work are indicated on approved submittal schedule.
3. Submit action submittals and informational submittals required by the same Specification Section as separate packages under separate transmittals.
4. Coordinate transmittal of submittals for related parts of the Work specified in different Sections, so processing will not be delayed because of need to review submittals concurrently for coordination.

    a. Architect reserves the right to withhold action on a submittal requiring coordination with other submittals until related submittals are received.

C. Processing Time: Allow time for submittal review, including time for resubmittals, as follows. Time for review shall commence on Architect's receipt of submittal. No extension of the Contract Time will be authorized because of failure to transmit submittals enough in advance of the Work to permit processing, including resubmittals.

1. Initial Review: Allow 15 days for initial review of each submittal. Allow additional time if coordination with subsequent submittals is required. Architect will advise Contractor when a submittal being processed must be delayed for coordination.
2. Intermediate Review: If intermediate submittal is necessary, process it in same manner as initial submittal.
3. Resubmittal Review: Allow 15 days for review of each resubmittal.
4. Sequential Review: Where sequential review of submittals by Architect's consultants, Owner, or other parties is indicated, allow 21 days for initial review of each submittal.

5. Concurrent Consultant Review: Where the Contract Documents indicate that submittals may be transmitted simultaneously to Architect and to Architect's consultants, allow 15 days for review of each submittal. Submittal will be returned to Architect before being returned to Contractor.

a. Submit one copy of submittal to concurrent reviewer in addition to specified number of copies to Architect.

D. Resubmittals: Make resubmittals in same form and number of copies as initial submittal.

1. Note date and content of previous submittal.
2. Note date and content of revision in label or title block, and clearly indicate extent of revision.
3. Resubmit submittals until they are marked with approval notation from Architect's action stamp.

E. Distribution: Furnish copies of final submittals to manufacturers, subcontractors, suppliers, fabricators, installers, authorities having jurisdiction, and others as necessary for performance of construction activities. Show distribution on transmittal forms.

F. Use for Construction: Retain complete copies of submittals on Project site. Use only final action submittals that are marked with approval notation from Architect's action stamp.

1.6 SUBMITTAL REQUIREMENTS

A. Product Data: Collect information into a single submittal for each element of construction and type of product or equipment.

1. If information must be specially prepared for submittal because standard published data are unsuitable for use, submit as Shop Drawings, not as Product Data.
2. Mark each copy of each submittal to show which products and options are applicable.
3. Include the following information, as applicable:

a. Manufacturer's catalog cuts.
b. Manufacturer's product specifications.
c. Standard color charts.
d. Statement of compliance with specified referenced standards.
e. Testing by recognized testing agency.
f. Application of testing agency labels and seals.
g. Notation of coordination requirements.
h. Availability and delivery time information.

4. For equipment, include the following in addition to the above, as applicable:

a. Wiring diagrams that show factory-installed wiring.
b. Printed performance curves.
c. Operational range diagrams.
d. Clearances required to other construction, if not indicated on accompanying Shop Drawings.

5. Submit Product Data before Shop Drawings, and before or concurrently with Samples.

B. Shop Drawings: Prepare Project-specific information, drawn accurately to scale. Do not base Shop Drawings on reproductions of the Contract Documents or standard printed data.

1. Preparation: Fully illustrate requirements in the Contract Documents. Include the following information, as applicable:

a. Identification of products.
b. Schedules.
c. Compliance with specified standards.
d. Notation of coordination requirements.
e. Notation of dimensions established by field measurement.
f. Relationship and attachment to adjoining construction clearly indicated.
g. Seal and signature of professional engineer if specified.

C. Samples: Submit Samples for review of type, color, pattern, and texture for a check of these characteristics with other materials.

1. Transmit Samples that contain multiple, related components, such as accessories together in one submittal package.
2. Identification: Permanently attach label on unexposed side of Samples that includes the following:

a. Project name and submittal number.
b. Generic description of Sample.
c. Product name and name of manufacturer.
d. Sample source.
e. Number and title of applicable Specification Section.
f. Specification paragraph number and generic name of each item.

3. Email Transmittal: Provide PDF transmittal. Include digital image file illustrating Sample characteristics and identification information for record.
4. Disposition: Maintain sets of approved Samples at Project site, available for quality-control comparisons throughout the course of construction activity. Sample sets may be used to determine final acceptance of construction associated with each set.

5. Samples for Initial Selection: Submit manufacturer's color charts consisting of units or sections of units, showing the full range of colors, textures, and patterns available.

a. Number of Samples: Submit one full set(s) of available choices where color, pattern, texture, or similar characteristics are required to be selected from manufacturer's product line. Architect will return submittal with options selected.

6. Samples for Verification: Submit full-size units or Samples of size indicated, prepared from same material to be used for the Work, cured and finished in manner specified, and physically identical with material or product proposed for use, and that show full range of color and texture variations expected. Samples

include, but are not limited to, the following: partial sections of manufactured or fabricated components; small cuts or containers of materials; complete units of repetitively used materials; swatches showing color, texture, and pattern; color range sets; and components used for independent testing and inspection.

a. Number of Samples: Submit one.

1) Submit a single Sample where assembly details, workmanship, fabrication techniques, connections, operation, and other similar characteristics are to be demonstrated.
2) If variation in color, pattern, texture, or other characteristic is inherent in material or product represented by a Sample, submit at least [three] <Insert number> sets of paired units that show approximate limits of variations.

D. Product Schedule: As required in individual Specification Sections, prepare a written summary indicating types of products required for the Work and their intended location. Include the following information in tabular form:

1. Type of product. Include unique identifier for each product indicated in the Contract Documents or assigned by Contractor if none is indicated.
2. Manufacturer and product name, and model number if applicable.
3. Number and name of room or space.
4. Location within room or space.

E. Qualification Data: Prepare written information that demonstrates capabilities and experience of firm or person. Include lists of completed projects with project names and addresses, contact information of architects and owners, and other information specified.

F. Design Data: Prepare and submit written and graphic information indicating compliance with indicated performance and design criteria in individual Specification Sections. Include list of assumptions and summary of loads. Include load diagrams if applicable. Provide name and version of software, if any, used for calculations. Number each page of submittal.

G. Certificates:

1. Certificates and Certifications Submittals: Submit a statement that includes signature of entity responsible for preparing certification. Certificates and certifications shall be signed by an officer or other individual authorized to sign documents on behalf of that entity. Provide a notarized signature where indicated.
2. Installer Certificates: Submit written statements on manufacturer's letterhead, certifying that Installer complies with requirements in the Contract Documents and, where required, is authorized by manufacturer for this specific Project.
3. Manufacturer Certificates: Submit written statements on manufacturer's letterhead, certifying that manufacturer complies with requirements in the Contract Documents. Include evidence of manufacturing experience where required.

4. Material Certificates: Submit written statements on manufacturer's letterhead, certifying that material complies with requirements in the Contract Documents.
5. Product Certificates: Submit written statements on manufacturer's letterhead, certifying that product complies with requirements in the Contract Documents.
6. Welding Certificates: Prepare written certification that welding procedures and personnel comply with requirements in the Contract Documents. Submit record of AWS B2.1/B2.1M on AWS forms. Include names of firms and personnel certified.

H. Test and Research Reports:

1. Compatibility Test Reports: Submit reports written by a qualified testing agency, on testing agency's standard form, indicating and interpreting results of compatibility tests performed before installation of product. Include written recommendations for substrate preparation and primers required.
2. Field Test Reports: Submit written reports indicating and interpreting results of field tests performed either during installation of product or after product is installed in its final location, for compliance with requirements in the Contract Documents.
3. Material Test Reports: Submit reports written by a qualified testing agency, on testing agency's standard form, indicating and interpreting test results of material for compliance with requirements in the Contract Documents.
4. Preconstruction Test Reports: Submit reports written by a qualified testing agency, on testing agency's standard form, indicating and interpreting results of tests performed before installation of product, for compliance with performance requirements in the Contract Documents.
5. Product Test Reports: Submit written reports indicating that current product produced by manufacturer complies with requirements in the Contract Documents. Base reports on evaluation of tests performed by manufacturer and witnessed by a qualified testing agency, or on comprehensive tests performed by a qualified testing agency.
6. Research Reports: Submit written evidence, from a model code organization acceptable to authorities having jurisdiction, that product complies with building code in effect for Project. Include the following information:

    a. Name of evaluation organization.
    b. Date of evaluation.
    c. Time period when report is in effect.
    d. Product and manufacturers' names.
    e. Description of product.
    f. Test procedures and results.
    g. Limitations of use.

1.7 DELEGATED DESIGN SERVICES

A. Performance and Design Criteria: Where professional design services or certifications by a design professional are specifically required of Contractor by the Contract Documents, provide products and systems complying with specific performance and design criteria indicated.

1. If criteria indicated are insufficient to perform services or certification required, submit a written request for additional information to Architect.

B. Delegated Design Services Certification: In addition to Shop Drawings, Product Data, and other required submittals, submit digitally signed PDF file, signed and sealed by the responsible design professional, for each product and system specifically assigned to Contractor to be designed or certified by a design professional.

1. Indicate that products and systems comply with performance and design criteria in the Contract Documents. Include list of codes, loads, and other factors used in performing these services.

1.8 CONTRACTOR'S REVIEW

A. Action Submittals and Informational Submittals: Review each submittal and check for coordination with other Work of the Contract and for compliance with the Contract Documents. Note corrections and field dimensions. Mark with approval stamp before submitting to Architect.

B. Contractor's Approval: Indicate Contractor's approval for each submittal with a uniform approval stamp. Include name of reviewer, date of Contractor's approval, and statement certifying that submittal has been reviewed, checked, and approved for compliance with the Contract Documents.

1. Architect will not review submittals received from Contractor that do not have Contractor's review and approval.

1.9 ARCHITECT'S REVIEW

A. Action Submittals: Architect will review each submittal, indicate corrections or revisions required, and return.

1. PDF Submittals: Architect will indicate, via markup on each submittal, the appropriate action.

B. Informational Submittals: Architect will review each submittal and will not return it, or will return it if it does not comply with requirements. Architect will forward each submittal to appropriate party.

C. Incomplete submittals are unacceptable, will be considered nonresponsive, and will be returned for resubmittal without review.

D. Architect will return without reviewing submittals received from sources other than Contractor.

E. Submittals not required by the Contract Documents will be returned by Architect without action.

PART 2 - PRODUCTS (Not Used)

PART 3 - EXECUTION (Not Used)

END OF SECTION 013300

SECTION 014000 - TESTING LABORATORY SERVICES

PART ONE - GENERAL

1.01 DESCRIPTION:

A. An independent Testing Laboratory will be provided by the Owner or his representative to inspect and test the materials and methods of construction as hereinafter specified for compliance with the specification requirements of the Contract Documents and to perform such other specialized technical services as may be required by the Owner or his representative.

B. The Owner will pay for the initial laboratory services for testing of materials for compliance with the requirements of the Contract Documents. The Contractor will pay for testing and re-testing of materials that do not comply with the requirements of the Contract Documents.

C. Tests and Inspections shall be conducted in accordance with specified requirements, and if not specified, in accordance with the applicable standards of the American Society for Testing and Materials (ASTM) or other recognized and accepted authorities in the field.

D. The Owner will pay for all initial testing except for concrete design mix and proof rolling, which will be the responsibility of the Contractor.

1.02 QUALIFICATION OF LABORATORY:

A. The Testing Laboratory selected should meet the basic requirements of ASTM E329 "Standard of Recommended Practice for Inspection and Testing Agencies for Concrete, Steel, and Bituminous Materials as Used in Construction", shall be inspected and approved by the ELF, FC & PA Joint Technical Committee, Inc. or by an equivalent recognized national authority and shall submit to the Owner, Architect, and the Engineer, a copy of the report of inspection of their facilities.

B. The Testing Laboratory selected shall meet "Recommended Requirements for Independent Laboratory Qualification", latest edition, as published by the "American Council of Independent Laboratory Qualification".

C. Testing machines shall be calibrated at intervals not exceeding 12 months by devices of accuracy traceable to the National Bureau of Standards or accepted values of natural physical constants. The testing laboratory shall submit a copy of certificate of calibration made by an accredited calibration agency.

D. The Testing Laboratory is only required to have testing facilities for work included in this project

E. The agent of the Testing Laboratory performing field sampling and field testing of concrete shall be certified by the American Concrete Institute as a Concrete Field Testing Technician – Grade 1, or by an equivalent recognized national

authority for an equivalent level of competence, or shall be a Licensed Professional Engineer.

1.03 AUTHORITIES AND DUTIES OF THE LABORATORY:

A. The Testing Laboratory shall obtain and review the project plans and specifications with the Architect and Engineer six (6) weeks prior to the start of construction. The Laboratory shall attend pre-construction conferences with the Architect, Engineer, Project Manager, General Contractor, and Material Suppliers, to coordinate materials inspection and testing requirements with the planned construction schedule. The Laboratory will participate in such conferences throughout the course of the project.

B. The Testing Laboratory shall be responsible for outlining a written detailed testing program conforming to the requirements as specified in the Contract Documents and in consultation with the Owner, Architect, and Engineer. The testing program shall contain an outline of inspections and tests to be performed with reference to applicable sections of the specifications or drawings and a list of personnel assigned to each portion of the work. Such testing program shall be submitted to the Owner, Architect, and Engineer five (5) weeks in advance of the start of construction so as not to delay the start of construction. It shall be the Testing Laboratory's responsibility that such program conforms to the requirements of the Specifications and falls within the Owner's budget for testing laboratory services. If the allocated budget is not sufficient to cover the services as outlined in the Specifications, it shall be the responsibility of the Laboratory to notify the Architect, Engineer, and Owner, so the start of Laboratory services can be modified accordingly prior to the start of construction. Furthermore, the Testing Laboratory shall monitor its expenditures throughout the course of the job and notify immediately the Owner, Architect and Engineer, of any significant divination from the planned testing program and budget.

C. The Laboratory shall cooperate with the Architect, Engineer, and Contractor, and provide qualified personnel promptly on notice.

D. The Laboratory shall perform the required inspections, sampling, and testing of materials as specified under each section and observe methods of construction for compliance with the requirements of the Contract Documents.

E. The Laboratory shall notify the Architect and contractor first by telephone, and then in writing, of observed irregularities and deficiencies of the work and other conditions not in compliance with the requirements of the Contract Documents.

F. The Laboratory shall submit copies of all reports of inspections and test promptly and directly to the parties named below. All reports shall contain at least the following information:
   1. Project Name
   2. Date report issued.
   3. Testing Laboratory name and address.
   4. Name and signature of inspector.
   5. Date of inspection and sampling.
   6. Date of Test.

7. Identification of product and Specification section.
8. Location in the project.
9. Identification of inspection or test.
10. Record of weather conditions and temperature (if applicable).
11. Results of test regarding compliance with Contract Documents.

G. The Laboratory shall send certified copies of test and inspection reports to the following parties:
1. Two (2) copies to the Owner or his representative.
2. Two (2) copies to the General Contractor.
3. One (1) copy to the Architect.
4. One (1) copy to the Engineer of responsibility
5. One copy to the Supplier of the material tested.

H. The Contractor will be notified immediately if the Testing Laboratory discovers any hazardous materials.

I. Upon completion of the job, the Testing Laboratory shall furnish to the Owner, Architect, and Engineer of responsibility, a statement certified by a Notary Public that all required tests and inspections were made in accordance with the requirements of the Contract Documents.

J. The Testing Laboratory is not authorized to revoke, alter, relax, enlarge upon, or release any requirements of the Specifications or to approve or accept any portion of the work or to perform any duties of the General Contractor and his Subcontractors.

1.04 CONTRACTOR'S RESPONSIBILITY:

A. Testing for concrete design mix and proof rolling will be the responsibility of the Contractor.

B. The Contractor shall cooperate with Laboratory personnel, provide access to the work, and to manufacturer's operations.

C. The Contractor shall provide to the Laboratory representative, samples of materials proposed for use in the work in quantities sufficient for accurate testing as specified.

D. The Contractor shall furnish casual labor, equipment, and facilities as required for sampling and testing by the Laboratory and otherwise facilitate all required inspections and tests.

E. The Contractor shall be responsible for notifying Owner's representative who will then contact the Testing Laboratory sufficiently in advance of operations to allow for assignment of personnel and scheduling of tests.

F. The Contractor shall arrange with the Testing Laboratory and pay for any additional samples and tests above those required by the Contract Documents as requested by the Contractor for his convenience in performing the work.

G. The Contractor shall pay for any additional inspections, sampling, testing, and re-testing as required when initial tests indicate work does not comply with the requirements of the Contract Documents.

H. The Contractor shall furnish and pay for the following items:
1. Soil survey of the location of borrow soil materials, samples of existing soil materials, and delivery to the Testing Laboratory.
2. Samples of concrete aggregates and delivery to the Testing Laboratory.
3. Concrete Coring, tests of below-strength concrete, and load tests, if ordered by the Owner, Architect, and/or Engineer.
4. Certification of reinforcing steel mill order.
5. Certification of structural steel mill order.
6. Certification of Portland cement.
7. Certification of welders.
8. Tests, samples, and mock-ups of substitute material where the substitution is requested by the Contractor, and the tests are necessary in the opinion of the Owner, Architect, or Engineer to establish equality with specified items.
9. Any other tests when such costs are required by the Contract Documents to be paid by the Contractor.

I. The Contractor shall be responsible for notifying the Owner, the Architect, the Engineer, and the Testing Laboratory when the source of any material is changed after the original tests or inspections have been made.

J. If in the opinion of the Owner, Architect or Engineer, any of the work of the contractor is not satisfactory, the Contractor shall make all tests that the Owner, Architect, or Engineer deem advisable to determine its proper construction. The Owner shall pay all costs if the tests prove the questioned work to be satisfactory.

1.05 EXTENT OF SERVICES FOR EARTHWORK:

A. Moisture Density Relationship for Natural and Fill Materials:
1. The Testing Laboratory will provide one (1) optimum moisture density curve for each type of soil, natural, imported fill, or on-site fill, encountered in subgrade and fills under building slabs and paved areas. Curves shall be generated in accordance with ASTM D698.

B. Quality Control Testing Required During Construction:
1. The Testing Laboratory shall inspect and approve the following subgrades and fill layers before further construction work is performed there on:
a. Paved Areas and Building slab Subgrade: Make at least one (1) field density test of the natural density test of the natural subgrade for every 2,500 square feet of paved area or building slab, but in no case less than three (3) tests. In each compacted fill layer, make one (1) field density test for every 2,500 square of building slab on paved area, but in no case less than three (3) tests.
b. Foundation Wall Backfill: Make at least one (1) field density test for each 200 lineal feet of all with a minimum of four (4) tests for each basement wall around the perimeter of the building and a minimum of one (1) test for every other type of foundation wall on

the site. Tests shall be at random locations and elevations for each wall.

2. Field Density Test shall be run according to ASTM D1556 (Density of Soil in Place by the Sand Cone Method), ASTM D2167) (Density of Soil in Place by the Rubber Balloon Method) or ASTM D2922 (Density of Soil and Soil Aggregate in Place by Nuclear Methods) as applicable.
3. The results of field density tests by the Testing Laboratory will not be considered satisfactory unless their value meet the required density.
4. The Testing Laboratory shall submit all moisture density curves and results of field density tests to the parties listed under Section 1.03G.
5. If reports by the Testing Laboratory indicate field densities lower than specified above, additional tests will be run by the Testing Laboratory with at least the frequencies scheduled above on re-compacted fill and/or natural subgrade. The Testing Laboratory shall notify the Contractor on a timely basis for any required re-testing so as not to delay the work. The costs of such tests shall be borne by the Contractor.
6. The Geotechnical Engineer shall provide inspection service of each dug footing subgrade prior to pouring foundation concrete. Such inspection shall verify that field conditions are consistent with soil report test results and that the foundation is being installed in the proper soil strata at the proper elevation.
   The Geotechnical Engineer shall submit written field inspection reports promptly after inspection to all parties listed in 1.3 G, and report his findings after each inspection by telephone to the Structural Engineer.

1.06 EXTENT OF SERVICE FOR CONCRETE MATERIALS AND POURED IN-PLACE CONCRETE:

A. Concrete Test Cylinders:
   1. Cylinders for strength tests shall be molded and laboratory cured in accordance with ASTM C31 "Method of Making and Curing Concrete Test Cylinders in the Field" and tested in accordance with ASTM C39 "Method of Testing for Compressive Strength of Cylindrical Concrete Specimens".
   2. Field samples for strength tests shall be taken in accordance with ASTM C172 "Method of Sampling Fresh Concrete".
   3. Frequency of Testing: Each set of test cylinders shall consist of a minimum of four (4) standard test cylinders. A set of test cylinders shall be made according to the following frequency:
      a. One (1) set for each class of concrete taken not less than once a day.
      b. For walls and floors, one (1) set for each 100 cubic yards or fraction thereof not less than one (1) set for each 5,000 square feet of surface area.
      c. For columns, one (1) set for each 150 cubic yards or fraction thereof with a minimum of two (2) sets per floor.
      d. For all other concrete, a minimum of one (1) set for each 100 cubic yards or fraction thereof.
      e. No more than one (1) set of cylinders at a time shall be made from any single truck.

f. If the total volume of concrete is such that the frequency of testing as specified above would provide less than five (5) strength tests for a given class of concrete, tests shall be made from at least five (5) randomly selected batches or from each batch if fewer than five batches are used.

g. The above frequencies assume that one (1) batch plant will be used for each pour. If more than one (1) batch plant is used, the frequencies cited above shall apply for each plant used.

The cylinders shall be numbered, dated, and the point of concrete placement in the building recorded. Of the four (4) cylinders per set, break one at seven days, two at 28 days, and one automatically at 56 days if either 28 day cylinder break is below required strength. One (1) additional cylinder per set will be required for formed slab and pan joist floors for the purpose of evaluating the concrete strength at the time of form stripping.

The cylinder shall be stored on the floor where form removal is to occur under the same exposure conditions as the floor concrete.

This cylinder shall be cured under field conditions in accordance with ASTM C31 "Method of Making and Curing Concrete Test Specimen in the Field". Field cured test cylinders shall be molded at the same time and from the same samples as laboratory cured test specimens. This cylinder shall be broken at the time of form removal as directed by the Contractor.

4. For concrete with design strength in excess of 5,000 PSI, the Contractor shall be responsible for providing a temperature controlled and protected concrete cylinder storage box at a point on the job site mutually agreeable with the Testing Laboratory for the purpose of storing concrete cylinders until they are transported to the Laboratory.

5. The Testing Laboratory shall be responsible for transporting the cylinders to the Laboratory in a protected environment such that no damage or ill effect will occur to the concrete cylinders.

6. The Testing Laboratory shall make and distribute concrete test reports after each job cylinder is broken. Such reports shall contain the following information:
   a. Truck number and ticket number.
   b. Concrete Batch Plant
   c. Mix design number.
   d. Accurate location of pour in the structure.
   e. Strength requirement.
   f. Date cylinders made and broken.
   g. Technician making cylinders.
   h. Concrete temperature at placing.
   i. Air temperature at point of placement in the structure.
   j. Amount of water added to the truck at the batch plant and at the site.
   k. Slump
   l. Unit weight.
   m. Air Content

n. Cylinder compressive strengths with type of failure if concrete does not meet Specification requirements. Seven (7) day breaks are not to be flagged if they are less than 70% of the required 28 day strength. 28 day breaks are to be flagged if either cylinder fails to meet Specification requirements.

B. Other Tests of Concrete Required by the Testing Laboratory:

1. Slump tests (ASTM C143) shall be made at the beginning of concrete placement for each batch plant and for each set of test cylinders made.
2. Air entrainment (ASTM C233) tests shall be made at the same time slump tests are made as cited above.
3. Concrete Temperature at placment at the same time slump tests are made as cited above.

B. Evaluation and Acceptance of Concrete:

1. A strength test shall be defined as the average strength of two (2) 28-day cylinder breaks from each set of cylinders.
2. The strength level of an individual class of concrete shall be considered satisfactory if both of the following requirements are met:
   a. The average of all sets of three (3) consecutive strength tests equal or exceed the required f'c.
   b. No individual strength tests (average of two (2) 28-day cylinder breaks) fall below the required f'c by more than 500 PSI.
   c. If either of the above requirements is not met, the Testing Laboratory shall immediately notify the Engineer by telephone. Steps shall immediately be taken to increase the average of subsequent strength tests.

D. Investigation of Low Strength Concrete Test Results:

1. If any strength test of laboratory cured cylinders fall below the required f'c by more than 500 PSI , the Contractor shall take steps immediately to assure that the load carryng capacity of the structure is not jeopardized.
2. The Testing Laboratory shall, under the direction of the Engineer, perform non-destructive field test of the concrete in question using Swiss Hammer, Windsor Probe, or other appropriate methods and report the results the same as for cylinder test reports.
3. If the likelihood of low strength concrete is confirmed and computations indicate that the load carrying capacity of the structure has been significantly reduced, tests of cores drilled from the area in question under the direction of the Engineer will be required in accordance with ASTM C42 (Method of Obtaining and Testing Drilled Cores and Saws Beams of Concrete). In such case, three (3) cores shall be taken for each strength test more than 500 PSI below required f'c. If concrete in the structure will be dry under service conditions, cores shall be air dried (temperature 60° to 80°, relatively humidity less than 60 percent) for seven (7) days before test and shall be tested dry. If concrete in the structure will be more than superficially wet under service conditions, cores shall be immersed in water for at least 48 hours and tested wet. The Contractor shall fill all holes made by drilling cores with an approved dry-pack concrete.

4. Concrete in an area represented by core test shall be considered structurally adequate if the average of three (3) cores is equal to at least 85% of f'c and if no single core is less than 75% of f'c. To check testing accuracy, locations of erratic core strengths may be re-tested.
5. If the above criteria are not met, and the structure adequacy remains in doubt, the Engineer may order a load test, as specified in ACI 318 for the questionable portion of the structure.
6. If the structural adequacy of the affected portion of the structure remains in doubt, the Engineer may order the structure to be strengthened by an appropriate means or torn down and re-built.
7. The costs of all investigations of low strength concrete shall be borne by the Contractor.

E. Job Site Inspection by the Testing Laboratory: The scope of the work to be performed by the inspector on the job site shall be as follows:
1. Verify that air temperatures at the point of placement in the structure are within acceptable limits defined in Section J prior to ordering of concrete by the Contractor.
2. Inspect concrete upon arrival to verify that the proper concrete mix number, type of concrete, and concrete strength is being placed at the proper location.
3. Inspect plastic concrete upon arrival at the job site to verify proper batching. The responsibility for adding water to trucks at the job site shall rest only with a duly appointed representative mutually agreeable to the Contractor, Owner, and Engineer, prior to the start of any concrete operations.
4. Obtain concrete test cylinders as specified in Sections D.1 and D.2.
5. Perform slump tests and air entrainment tests as specified in Section D.6.
6. Record information for concrete test reports as specified in Section D.6
7. Verify that all concrete being placed meets job Specifications. Reject concrete not meeting the requirements of Section K and immediately notify the Contractor, Batch Plant Inspector, Architect , Engineer, and Owner.
8. Pick up and transport to Laboratory, cylinders cast the previous day.
9. Check concrete placing techniques to determine that concrete deposited is uniform and that vertical drop does not exceed six feet.
10. The job site inspector shall report any irregularities that occur in the concrete at the job site or test results to the Contractor, Architect, Owner, and Engineer.

F. Causes for Rejection of Concrete Delivered to the Site:

A duly appointed representative agreeable to the Architect, Owner, and Engineer, shall reject all concrete delivered to the site for any of the following reasons:
1. Wrong class of concrete (incorrect mix design number).
2. Air Temperature: Air temperature limits shall be as follows:
   a. Cold Weather: Air temperature must be 40°F. and rising.
   b. Hot Weather: Air temperature must be cooler than 100°F. Concrete may be placed at other air temperature ranges only with approval to the duly appointed representative.

3. Concrete with temperatures exceeding 95° F. may not be placed in the structure without approval of the job inspector for the Testing Laboratory or other duly appointed representative.
4. Air contents outside the limits specified in the mix designs.
5. Slumps outside the limits specified in Section C.6 or the mix designs.
6. Excessive Age: Concrete shall be discharged within 90 minutes of plant departure or before it begins to set if sooner than 90 minutes unless approved by the Laboratory job inspector or other duly appointed representative.

1.07 EXTENT OF SERVICES FOR STRUCTURAL STEEL AND RELATED WORK:

A. Contract Obligations:
1. Owner Responsibility: The Owner shall pay for all initial shop and field inspections and tests are required during the fabrication and erection of the structural steel.
2. Contractor Responsibility: The Contractor shall pay for and arrange with the Testing Laboratory for the certification of all shop and field welders. The costs of all re-testing of material or workmanship not in conformance with the Contract Documents shall be borne by the Contractor.
3. The Fabricator and Erector shall provide: the laboratory inspector with access to all places where work is being done. A minimum of 24 hours notification shall be given prior to commencement of work.
4. Testing Laboratory Responsibility: The inspection of shop work by the Testing Laboratory shall be performed in the Fabricator's shop to the fullest extent possible. Such inspections shall be in sequence, timely, and performed in such a manner as to minimize disruptions in operations and to permit the repair of all non-conforming work while the materials in process in the fabricating shop. Inspection of field work shall be completed prompted so that corrections can be made without delaying the progress of the work. The Testing Laboratory shall provide test reports of all shop and field inspections. Shop test reports shall include shop welders certifications.

   All test reports shall indicate types and locations of all defects found during inspection, the measures required and performed to correct such defects, statements of final approval of all welding and bolting of shop and field connections. In addition to the parties listed in Section 1.03.G, the fabricator and erector shall receive copies of all test reports.
5. The Architect, Engineer, and Testing Laboratory reserve the right to reject any material or workmanship not in conformance with the Contract Documents at any time during the progress of the work. However, this provision does not allow waiving the obligation for timely, in sequence inspection.

B. Mill Tests of Structural Steel:
1. Mill Order Steel: The Fabricator shall furnish certified mill test reports and an affidavit stating that the structural steel furnished meets the requirements of the grade specified on the structural drawings for all mill order steel. In case of controversy, certified reports of tests, according to ASTM A6 or A568 as applicable, made by the Owner's Testing Laboratory,

paid for by the Contractor, shall be made to verify conformity with ASTM standards.

2. Local Stock Steel: Materials taken from stock by a Fabricator for use for structural purposes must be of a quality at least equal to that required by the ASTM specifications applicable to the classification covering the intended use.
3. Certified mill test reports shall be accepted as sufficient record of the quality of materials carried in stock by the fabricator. In case of controversy, certified reports as specified for mill order steel shall be required.
4. If tests are required, test specimens shall be taken by the Contractor under the direction of the Testing Laboratory and shall be machined by the Testing Laboratory to dimensions as required by the applicable ASTM standards.

C. Shop Inspections and Tests:

The Testing Laboratory shall provide inspection at the designated fabrication shops for the designated periods of time to perform shop inspection and tests. The designated fabrication shops and time periods of inspections shall be determined in consultation with the Architect, Owner, and Engineer prior to the start of fabrication in a timely manner so as not to delay the fabrication process. The following tests and inspections shall be performed.

1. Review shop drawings and shop procedures with fabricator's supervisory personnel.
2. Review welding procedures and obtain welder certificates.
3. Verify welding electrodes to be used and other welding consumables as the job progresses.
4. Provide inspection of surface preparation for coating and coating operations.

D. Field Inspections and Tests:

The Testing Laboratory shall provide inspection in the field for a period of time as determined in consultation with the Architect, Owner, and Engineer prior to the start of erection in a timely manner so as to not delay the start of erection. The following tests and inspections shall be made:

1. Obtain the planned erection procedure, and review with the Erector's supervisory personnel.
2. Check the installation of base plates for proper leveling, grout type, and grout application.
3. Verify field welding procedures and obtain welder certificates.
4. Check steel as received in the field for possible shipping damage, workmanship, and piece marking.
5. Check plumbing and frame alignment as erection progresses.
6. Check required camber of floor beams.
7. Check joint preparation and fit up, backing strips, and run-out plates for welded moment connections and column splices.
8. Check pre-heating to assure proper temperature, uniformity, and thoroughness through the full material thickness.
9. Review welding sequence.

10. Visually inspect field welding for size, length, and quality.
11. Perform non-destructive examination services for various weldments of field erections determined in consultation with the Structural Engineer prior to the start of erection. The laboratory shall furnish a qualified technician with the necessary equipment to perform radiographic, ultrasonic, magnetic particle, or dye penetrant inspection as required for the item being tested and other duties as outlined for shop inspection in Section C.12.
12. Check calibration of impact wrenches used in field bolted connections.
13. Check high strength field bolted connections according to inspection procedures outlined in the "Specification for Structural Joints Using ASTM A325 or A490 Bolts". Unless specified otherwise, test one (1) bolt in 10% of the bolted connections. If that bolt is found to be improperly tightened, test all bolts in the connection.
14. Visually inspect the welding of metal deck to the structure.
15. Perform field tests on 10% of completed shear connectors according to inspection procedures outlined in AWS D1.1.

END OF SECTION 014000

SECTION 015000 - TEMPORARY FACILITIES

PART ONE - GENERAL

1.01 FACILITIES:

A. Temporary Offices: Provide sufficient space for Contractor's personnel.
   1. Provide temporary office facilities complete with lighting, heating and air conditioning and telephone service.
   2. Location of temporary office shall be subject to Architect's acceptance.

B. Temporary Storage Facilities: Install storage and fabrication sheds sized, furnished, and equipped to accommodate materials and equipment involved, including temporary utility service. Sheds may be open shelters of fully enclosed spaces. Locations and adequacy of storage facilities shall be subject to Architect's approval.

C. Electrical Service: Provide temporary electrical service, including extensions and connections necessary for construction work. Pay costs of installing and maintaining service for duration of project. Pay costs associated with use of permanent electrical system until Date of Substantial Completion.

D. Temporary Lighting: Provide the following minimum light levels for construction purposes.
   1. General Construction and Safety Lighting: Five (5) footcandles.
   2. Finishing Work and Testing: twenty-five (25) footcandles.

E. Temporary Heat and Ventilation:
   1. Provide temporary heat in enclosed spaces to provide minimum temperatures of 40 degrees F until time finishing work begins.
   2. After building is totally enclosed and installation of finishes begins, maintain spaces in a temperature range of 60 degrees F. to 80 degrees F. at all times, except as may otherwise be required by product manufacturers for proper product installation and performance. Maintain until Date of Substantial Completion.
   3. Maintain relative humidity in a range of 50% to 65% in enclosed spaces after building is enclosed and installation of finishes begin; except as may otherwise be required by product manufacturers for proper product installation and performance.
   4. Provide ventilation to prevent accumulation of dust, fumes or gases and to properly cure materials and disperse humidity.

G. Water Service: Provide temporary water for construction purposes, including extensions and connections necessary for work. Pay costs of installation and maintaining service for duration of project. Pay costs associated with use of permanent water system until Date of Substantial Completion.

H. Sanitary Toilet Facilities: Provide and maintain temporary toilet facilities for construction personnel. Permanent new facilities may not be used by personnel. During work at existing facilities, under no circumstances will workmen be allowed to use any student or teacher toilet facility within the building.

I. Relocate temporary facilities during construction as required by progress of the Work at no additional cost to the Owner.

J. At completion of Work, or at time of permanent utility connections, as applicable, remove temporary facilities, including connections and debris resulting from temporary installation.

1.02 STAGING AREA:

A. The Contractor shall be responsible for establishing staging areas WITHIN the designated Limit of Work area for this Contract; no staging or materials storage will be permitted outside the Limit of Work area.

B. The Contractor is solely responsible for all security, protection, safeguards, etc. of materials and personnel within the established staging area (areas).

1.03 TEMPORARY CONTROLS:

A. Noise Control: Contractor shall make every effort to effect a satisfactory noise abatement program during school hours.

B. Dust Control: Where cutting or removing materials which will generate dust and dirt, the Contractor shall provide temporary dust curtains, solid barricades, or the like, to retain and control dust relative to the area in which work is occurring. Clean areas of dust as practicable so as not to allow its spread by pedestrian traffic.

1.04 CONTRACTOR'S USE OF PREMISES: The Contractor is reminded that the Project is limited by its nature to certain physical areas of each facility. The facilities may be fully occupied (except as provided for work areas) while the work progresses. Therefore, restrict personnel to areas of each facility where their presence is required by the work to be performed.

1.05 EXISTING BUILDING AND PARTIALLY OCCUPIED NEW BUILDING SECURITY:

A. Required emergency exit ways shall be maintained at all times.

1.06 PROJECT SIGNS:

A. Contractor will coordinate placement with the Principal or Site Supervisor.

B. The Contractor shall provide, furnish and install project sign in accordance with FP& C Instructions on Specifications for Project Sign Requirements.

END OF SECTION 015000

SECTION 016300 - SUBSTITUTIONS

PART ONE - GENERAL

1.01 REQUIREMENTS INCLUDED: Substitutions for products specified shall be allowed only under the conditions stated in this section.

1.02 SUBSTITUTIONS/PRIOR APPROVALS:

A. If it is desired to use products different from those indicated in the Contract Documents, the party requesting the substitution shall make written application as described herein. The burden of proving equality of proposed substitutions rests on the party making the request for substitution.

Requests for substitution shall reach the Architect not less than seven (7) working days prior to the date for opening of bids. Requests received by the Architect after this date will not be considered.

1.03 SUBMITTALS:

A. Submit a separate request for each substitution. Support each request with:
1. Date of request.
2. Name of party proposing substitution.
3. Project name.
4. Specification reference.
5. Complete data substantiating compliance of proposed substitution with requirements stated in Contract Documents:
   a. Product identification, including manufacturer's name and address.
   b. Manufacturer's literature, identify:
      (1) Product description.
      (2) Reference standards.
      (3) Performance and test data.
      (4) Manufacturer's recommendations for use and installation.
   c. Samples, as applicable.
   d. Name and address of similar projects on which product has been used, and date of each installation.
6. Itemized comparison of the proposed substitution with product specified, list all variations.
7. Data relating to changes in construction schedule.
8. Any effect of substitution on separate contracts.
9. List of changes required in other work or products.
10. Designation of required license fees or royalties.
11. Designation of availability of maintenance services, sources of replacement materials.

B. If a proposed substitution is approved by the Architect, an addendum will be issued to prospective bidders not less than three (3) days prior to the date set for opening bids. If a substitution does not appear in an addendum it shall mean that the Architect has not approved the product and the successful bidder shall be responsible for furnishing materials and products in accordance with the

Contract Documents. Following the receipt of bids, no further requests for substitution of products or materials will be considered.

1.04 CONTRACTOR'S REPRESENTATION: In connection with the use of any substitute item approved by the Architect it shall be the General Contractor's responsibility to see that such items meet all space requirements, and that any alterations to connecting items necessitated by use of the alternate items are properly made at no increase in cost to the Owner, and that all items are in compliance with the specification requirements. Contractor shall waive all claims for additional costs caused by substitutions which may subsequently become apparent.

END OF SECTION

SECTION 016500 - PROJECT RECORD DOCUMENTS

PART ONE - GENERAL

1.01 REQUIREMENTS INCLUDED:

A. Maintain at Project Site for Owner, one (1) record copy of:
1. Drawings.
2. Project Manual/Specifications.
3. Addenda.
4. Change Orders and other Modifications to Contract.
5. Field Orders or written instructions.
6. Approved and Approved As Noted Shop Drawings, Product Data and Samples.
7. Field Test Records.

B. Make Record Documents available to Architect.

C. Submit final Record Documents with Closeout Documents.

1.02 QUALITY ASSURANCE:

A. Make entries within twenty-four (24) hours after receipt of information except note dimensional corrections and new dimensional data immediately upon determination.

B. Do not permit record sets to be used for any other purpose.

1.03 RECORD DOCUMENTS:

A. Field Record Drawings: One complete set of Drawings upon which all changes to Work are recorded daily with colored pencil to provide accurate, factual information relative to Work as constructed, both visible and concealed. Entries shall be made on line prints provided by Architect with each sheet bearing rubber stamp impression reading "Record Drawings".
1. Identify entry by "cloud" type circle around affected Work. Initial and date each entry.
2. Record the following:
a. Horizontal location and elevation of underground portions of Work.
b. Location, size and arrangement of concealed mechanical and electrical portions of Work, including conduit, piping, valves, ductwork, outlets, and equipment.
c. Location, size and arrangement of exposed mechanical and electrical portions of Work.
d. Changes and corrections to dimensions.
e. Changes to materials, products, equipment and finishes.

f. Changes and deviations in Work from that indicated in Contract Documents.

g. Identify equipment, valves, piping, conduit, fixtures and devices using symbols and designations corresponding to those used in Contract Documents.

B. Final Record Drawings: One complete set of reproducible sepia transparencies upon which all changes to Work are transferred from Field Record Drawings in ink or black pencil. Sepia transparencies will be provided by the Architect.

C. Field Record Specifications: One complete set of Project Manual/Specifications within which changes to materials, products, equipment, and systems are recorded; also, note which specified manufacturer was used. Make corrections with colored pencil and mark the Manual "Record Specifications" on outside back binding.

D. Final Record Specifications: Either Field Record Specifications volume or new set of Specifications bearing all changes transferred from Field Record Specifications.

SECTION 017300 - EXECUTION

PART 1 - GENERAL

1.1 RELATED DOCUMENTS

A. Drawings and general provisions of the Contract, including General and Supplementary Conditions and other Division 01 Specification Sections, apply to this Section.

1.2 SUMMARY

A. Section includes general administrative and procedural requirements governing execution of the Work including, but not limited to, the following:

1. Construction layout.
2. Field engineering and surveying.
3. Installation of the Work.
4. Coordination of Owner-installed products.
5. Progress cleaning.
6. Starting and adjusting.
7. Protection of installed construction.

1.3 DEFINITIONS

A. Cutting: Removal of in-place construction necessary to permit installation or performance of subsequent work.

B. Patching: Fitting and repair work required to restore construction to original conditions after installation of subsequent work.

1.4 INFORMATIONAL SUBMITTALS

A. Qualification Data: For land surveyor.

B. Certificates: Submit certificate signed by land surveyor certifying that location and elevation of improvements comply with requirements.

C. Final Property Survey: Submit 1 copy showing the Work performed and record survey data.

1.5 QUALITY ASSURANCE

A. Land Surveyor Qualifications: A professional land surveyor who is legally qualified to practice in jurisdiction where Project is located and who is experienced in providing land-surveying services of the kind indicated.

B. Manufacturer's Installation Instructions: Obtain and maintain on-site manufacturer's written recommendations and instructions for installation of products and equipment.

PART 2 - PRODUCTS

2.1 MATERIALS

A. General: Comply with requirements specified in other Sections.

PART 3 - EXECUTION

3.1 EXAMINATION

A. Existing Conditions: The existence and location of underground and other utilities and construction indicated as existing are not guaranteed. Before beginning sitework, investigate and verify the existence and location of underground utilities, mechanical and electrical systems, and other construction affecting the Work.

1. Before construction, verify the location and invert elevation at points of connection of sanitary sewer, storm sewer, and water-service piping; underground electrical services; and other utilities.
2. Furnish location data for work related to Project that must be performed by public utilities serving Project site.

B. Examination and Acceptance of Conditions: Before proceeding with each component of the Work, examine substrates, areas, and conditions, with Installer or Applicator present where indicated, for compliance with requirements for installation tolerances and other conditions affecting performance. Record observations.

1. Examine roughing-in for mechanical and electrical systems to verify actual locations of connections before equipment and fixture installation.
2. Examine walls, floors, and roofs for suitable conditions where products and systems are to be installed.
3. Verify compatibility with and suitability of substrates, including compatibility with existing finishes or primers.

C. Written Report: Where a written report listing conditions detrimental to performance of the Work is required by other Sections, include the following:

1. Description of the Work.
2. List of detrimental conditions, including substrates.

3. List of unacceptable installation tolerances.
4. Recommended corrections.

D. Proceed with installation only after unsatisfactory conditions have been corrected. Proceeding with the Work indicates acceptance of surfaces and conditions.

3.2 PREPARATION

A. Existing Utility Information: Furnish information to local utility that is necessary to adjust, move, or relocate existing utility structures, utility poles, lines, services, or other utility appurtenances located in or affected by construction. Coordinate with authorities having jurisdiction.

B. Field Measurements: Take field measurements as required to fit the Work properly. Recheck measurements before installing each product. Where portions of the Work are indicated to fit to other construction, verify dimensions of other construction by field measurements before fabrication. Coordinate fabrication schedule with construction progress to avoid delaying the Work.

C. Space Requirements: Verify space requirements and dimensions of items shown diagrammatically on Drawings.

D. Review of Contract Documents and Field Conditions: Immediately on discovery of the need for clarification of the Contract Documents caused by differing field conditions outside the control of Contractor, submit a request for information to Architect according to requirements in Section 013100 "Project Management and Coordination."

3.3 CONSTRUCTION LAYOUT

A. Verification: Before proceeding to lay out the Work, verify layout information shown on Drawings, in relation to the property survey and existing benchmarks. If discrepancies are discovered, notify Architect promptly.

B. General: Engage a land surveyor to lay out the Work using accepted surveying practices.

1. Establish benchmarks and control points to set lines and levels at each story of construction and elsewhere as needed to locate each element of Project.
2. Establish limits on use of Project site.
3. Establish dimensions within tolerances indicated. Do not scale Drawings to obtain required dimensions.
4. Inform installers of lines and levels to which they must comply.
5. Check the location, level and plumb, of every major element as the Work progresses.
6. Notify Architect when deviations from required lines and levels exceed allowable tolerances.
7. Close site surveys with an error of closure equal to or less than the standard established by authorities having jurisdiction.

C. Site Improvements: Locate and lay out site improvements, including pavements, grading, fill and topsoil placement, utility slopes, and rim and invert elevations.

D. Building Lines and Levels: Locate and lay out control lines and levels for structures, building foundations, column grids, and floor levels, including those required for mechanical and electrical work. Transfer survey markings and elevations for use with control lines and levels. Level foundations and piers from two or more locations.

E. Record Log: Maintain a log of layout control work. Record deviations from required lines and levels. Include beginning and ending dates and times of surveys, weather conditions, name and duty of each survey party member, and types of instruments and tapes used. Make the log available for reference by Architect.

3.4 FIELD ENGINEERING

A. Identification: Owner will identify existing benchmarks, control points, and property corners.

B. Reference Points: Locate existing permanent benchmarks, control points, and similar reference points before beginning the Work. Preserve and protect permanent benchmarks and control points during construction operations.

1. Do not change or relocate existing benchmarks or control points without prior written approval of Architect. Report lost or destroyed permanent benchmarks or control points promptly. Report the need to relocate permanent benchmarks or control points to Architect before proceeding.
2. Replace lost or destroyed permanent benchmarks and control points promptly. Base replacements on the original survey control points.

C. Benchmarks: Establish and maintain a minimum of two permanent benchmarks on Project site, referenced to data established by survey control points. Comply with authorities having jurisdiction for type and size of benchmark.

1. Record benchmark locations, with horizontal and vertical data, on Project Record Documents.
2. Where the actual location or elevation of layout points cannot be marked, provide temporary reference points sufficient to locate the Work.
3. Remove temporary reference points when no longer needed. Restore marked construction to its original condition.

D. Final slab elevation certificate: Engage a land surveyor to prepare a final slab elevation certificate for Project.

E. The Contractor shall provide a FEMA National Flood Insurance Program Elevation Certificate.

3.5 INSTALLATION

A. General: Locate the Work and components of the Work accurately, in correct alignment and elevation, as indicated.

1. Make vertical work plumb and make horizontal work level.
2. Where space is limited, install components to maximize space available for maintenance and ease of removal for replacement.
3. Conceal pipes, ducts, and wiring in finished areas unless otherwise indicated.

B. Comply with manufacturer's written instructions and recommendations for installing products in applications indicated.

C. Install products at the time and under conditions that will ensure the best possible results. Maintain conditions required for product performance until Substantial Completion.

D. Conduct construction operations so no part of the Work is subjected to damaging operations or loading in excess of that expected during normal conditions of occupancy.

E. Sequence the Work and allow adequate clearances to accommodate movement of construction items on site and placement in permanent locations.

F. Tools and Equipment: Where possible, select tools or equipment that minimize production of excessive noise levels.

G. Templates: Obtain and distribute to the parties involved templates for work specified to be factory prepared and field installed. Check Shop Drawings of other portions of the Work to confirm that adequate provisions are made for locating and installing products to comply with indicated requirements.

H. Attachment: Provide blocking and attachment plates and anchors and fasteners of adequate size and number to securely anchor each component in place, accurately located and aligned with other portions of the Work. Where size and type of attachments are not indicated, verify size and type required for load conditions.

1. Mounting Heights: Where mounting heights are not indicated, mount components at heights directed by Architect.
2. Allow for building movement, including thermal expansion and contraction.
3. Coordinate installation of anchorages. Furnish setting drawings, templates, and directions for installing anchorages, including sleeves, concrete inserts, anchor bolts, and items with integral anchors, that are to be embedded in concrete or masonry. Deliver such items to Project site in time for installation.

I. Joints: Make joints of uniform width. Where joint locations in exposed work are not indicated, arrange joints for the best visual effect. Fit exposed connections together to form hairline joints.

J. Repair or remove and replace damaged, defective, or nonconforming Work.

1. Comply with Section 017700 "Closeout Procedures" for repairing or removing and replacing defective Work.

3.6 OWNER-INSTALLED PRODUCTS

A. Site Access: Provide access to Project site for Owner's construction personnel.

B. Coordination: Coordinate construction and operations of the Work with work performed by Owner's construction personnel.

1. Construction Schedule: Inform Owner of Contractor's preferred construction schedule for Owner's portion of the Work. Adjust construction schedule based on a mutually agreeable timetable. Notify Owner if changes to schedule are required due to differences in actual construction progress.
2. Preinstallation Conferences: Include Owner's construction personnel at preinstallation conferences covering portions of the Work that are to receive Owner's work. Attend preinstallation conferences conducted by Owner's construction personnel if portions of the Work depend on Owner's construction.

3.7 PROGRESS CLEANING

A. General: Clean Project site and work areas daily, including common areas. Enforce requirements strictly. Dispose of materials lawfully.

1. Comply with requirements in NFPA 241 for removal of combustible waste materials and debris.
2. Do not hold waste materials more than seven days during normal weather or three days if the temperature is expected to rise above 80 deg F (27 deg C).
3. Containerize hazardous and unsanitary waste materials separately from other waste. Mark containers appropriately and dispose of legally, according to regulations.

    a. Use containers intended for holding waste materials of type to be stored.

4. Coordinate progress cleaning for joint-use areas where Contractor and other contractors are working concurrently.

B. Site: Maintain Project site free of waste materials and debris.

C. Work Areas: Clean areas where work is in progress to the level of cleanliness necessary for proper execution of the Work.

1. Remove liquid spills promptly.
2. Where dust would impair proper execution of the Work, broom-clean or vacuum the entire work area, as appropriate.

D. Installed Work: Keep installed work clean. Clean installed surfaces according to written instructions of manufacturer or fabricator of product installed, using only cleaning materials specifically recommended. If specific cleaning materials are not

recommended, use cleaning materials that are not hazardous to health or property and that will not damage exposed surfaces.

E. Concealed Spaces: Remove debris from concealed spaces before enclosing the space.

F. Exposed Surfaces in Finished Areas: Clean exposed surfaces and protect as necessary to ensure freedom from damage and deterioration at time of Substantial Completion.

G. Waste Disposal: Do not bury or burn waste materials on-site. Do not wash waste materials down sewers or into waterways.

H. During handling and installation, clean and protect construction in progress and adjoining materials already in place. Apply protective covering where required to ensure protection from damage or deterioration at Substantial Completion.

I. Clean and provide maintenance on completed construction as frequently as necessary through the remainder of the construction period. Adjust and lubricate operable components to ensure operability without damaging effects.

J. Limiting Exposures: Supervise construction operations to ensure that no part of the construction, completed or in progress, is subject to harmful, dangerous, damaging, or otherwise deleterious exposure during the construction period.

3.8 STARTING AND ADJUSTING

A. Coordinate startup and adjusting of equipment and operating components with requirements in Section 019113 "General Commissioning Requirements."

B. Start equipment and operating components to confirm proper operation. Remove malfunctioning units, replace with new units, and retest.

C. Adjust equipment for proper operation. Adjust operating components for proper operation without binding.

D. Test each piece of equipment to verify proper operation. Test and adjust controls and safeties. Replace damaged and malfunctioning controls and equipment.

E. Manufacturer's Field Service: Comply with qualification requirements in Section 014000 "Quality Requirements."

3.9 PROTECTION OF INSTALLED CONSTRUCTION

A. Provide final protection and maintain conditions that ensure installed Work is without damage or deterioration at time of Substantial Completion.

B. Comply with manufacturer's written instructions for temperature and relative humidity.

END OF SECTION 017300

SECTION 02 23 10 - TREE PROTECTION AND TRIMMING

PART 1 - GENERAL

1.1 RELATED DOCUMENTS

A. Drawings and general provisions of the Contract, including General and Supplementary Conditions and other Division 01 Specification Sections, apply to this Section.

1.2 SUMMARY

A. Section includes general protection and pruning of existing trees and plants that are affected by execution of the Work, whether temporary or permanent construction. ALL ROOT AND CROWN PRUNING SHALL BE PERFORMED BY SOUTHERN UNIVERSITY LANDSCAPING SERVICES UNIT.

B. Related Sections:
   1. Section 01500 "Temporary Facilities and Controls" for temporary site fencing.
   2. Section 311000 "Site Clearing" for removing existing trees and shrubs.

1.3 DEFINITIONS

A. Caliper: Diameter of a trunk measured by a diameter tape or the average of the smallest and largest diameters at 6 inches above the ground for trees up to, and including, 4-inch size; and 12 inches above the ground for trees larger than 4-inch size.

B. Plant-Protection Zone: Area surrounding individual trees, groups of trees, shrubs, or other vegetation to be protected during construction, and indicated on Drawings.

C. Tree-Protection Zone: Area surrounding individual trees or groups of trees to be protected during construction, and indicated on Drawings.

D. Vegetation: Trees, shrubs, groundcovers, grass, and other plants.

E. Topsoil: Natural or cultivated top layer of the soil profile or manufactured topsoil; containing organic matter and sand, silt, and clay particles; friable, pervious, and black or a darker shade of brown, gray, or red than underlying subsoil; reasonably free of subsoil, clay lumps, gravel, and other objects more than 1 inch in diameter; and free of weeds, roots, and toxic and other non-soil materials.
   1. Obtain topsoil only from well-drained sites where topsoil is 4 inches deep or more; do not obtain from bogs or marshes.

F. Topsoil: Stockpiled topsoil from project site or imported topsoil complying with ASTM D 5268.

G. Organic Mulch: Free from deleterious materials and suitable as a top dressing for trees and shrubs, consisting of one of the following:
   1. Type: Pine straw.
   Color: Natural.
   2. Type: Hardwood Mulch
   Color: Natural.

1.4 SUBMITTALS

A. Tree Pruning Schedule: Written schedule detailing scope and extent of pruning of trees to remain that interfere with or are affected by construction.
   1. Species and size of tree.
   2. Location on site plan. Include unique identifier for each.
   3. Reason for pruning.
   4. Description of pruning to be performed.
   5. Description of maintenance following pruning.

B. Existing Conditions: Documentation of existing trees and plantings indicated to remain, which establishes preconstruction conditions that might be misconstrued as damage caused by construction activities.
   1. Use sufficiently detailed photographs or videotape.
   2. Include plans and notations to indicate specific wounds and damage conditions of each tree or other plants designated to remain.

1.5 QUALITY ASSURANCE

A. Preinstallation Conference: Conduct conference at Project site.
   1. Review methods and procedures related to temporary tree and plant protection including, but not limited to, the following:
      a. Construction schedule. Verify availability of materials, personnel, and equipment needed to make progress and avoid delays.
      b. Enforcing requirements for protection zones.
      c. Arborist's responsibilities.
      d. Field quality control.

1.6 PROJECT CONDITIONS

A. The following practices are prohibited within protection zones:
   1. Storage of construction materials, debris, or excavated material.
   2. Parking vehicles or equipment.
   3. Foot traffic.
   4. Erection of sheds or structures.
   5. Impoundment of water.
   6. Excavation or other digging unless otherwise indicated.
   7. Attachment of signs to or wrapping materials around trees or plants unless otherwise indicated.

B. Do not direct vehicle or equipment exhaust toward protection zones.

C. Prohibit heat sources, flames, ignition sources, and smoking within or near protection zones and organic mulch.

D. Prohibit disposal of chemical or paint remains within root zone protection areas.

PART 2 - **PRODUCTS**

N/A

PART 3 - **EXECUTION**

3.1 EXAMINATION

A. Erosion and Sedimentation Control: Examine the site to verify that temporary erosion- and sedimentation-control measures are in place. Verify that flows of water redirected from construction areas or generated by construction activity do not enter or cross protection zones.

B. For the record, prepare written report, endorsed by arborist, listing conditions detrimental to tree and plant protection.

3.2 PREPARATION

A. Locate and clearly identify trees, shrubs, and other vegetation to remain. Tie a 1-inch blue-vinyl tape around each tree trunk at 54 inches above the ground.

B. Protect tree root systems from damage caused by runoff or spillage of noxious materials while mixing, placing, or storing construction materials. Protect root systems from ponding, eroding, or excessive wetting caused by dewatering operations.

C. Tree-Protection Zones: Mulch areas inside tree-protection zones and other areas indicated.
   1. Apply 3-inch average thickness of organic mulch. Do not place mulch within 6 inches of tree trunks.

3.3 TREE- AND PLANT-PROTECTION ZONES

A. Protection-Zone Fencing: Install protection-zone fencing along edges of protection zones before materials or equipment are brought on the site and construction operations begin in a manner that will prevent people and animals from easily entering protected area except by entrance gates. Construct fencing so as not to obstruct safe passage or visibility at vehicle intersections where fencing is located adjacent to pedestrian walkways or in close proximity to street intersections, drives, or other vehicular circulation.
   1. Fencing: 6' chain link fence panels or Approved Alternative.
   2. Access Gates: Install to allow for entry into tree protection zone for maintenance; adjust to operate smoothly, easily, and quietly, free of binding, warp, excessive deflection, distortion, nonalignment, misplacement, disruption, or malfunction, throughout entire operational range. Confirm that latches and locks engage accurately and securely without forcing or binding.

B. Protection-Zone Signage: Install protection-zone signage in visibly prominent locations in a manner approved by Landscape Architect. Install one sign spaced approximately every 35 feet on protection-zone fencing, but no fewer than four signs with each facing a different direction.

C. Maintain protection zones free of weeds and trash.

D. Repair or replace trees, shrubs, and other vegetation indicated to remain or be relocated that are damaged by construction operations, in a manner approved by Landscape Architect.

E. Maintain protection-zone fencing and signage in good condition as acceptable to Landscape Architect and remove when construction operations are complete and equipment has been removed from the site.
   1. Do not remove protection-zone fencing, even temporarily, to allow deliveries or equipment access through the protection zone.

   2. Temporary access is permitted subject to preapproval in writing by arborist if a root buffer effective against soil compaction is constructed as directed by arborist. Maintain root buffer so long as access is permitted.

3.4 EXCAVATION

A. General: Excavate at edge of protection zones and for trenches indicated within protection zones according to requirements in Section 312000 "Earth Moving."

B. Trenching near Trees: Where utility trenches are required within protection zones, hand excavate under or around tree roots or tunnel under the roots by drilling, auger boring, or pipe jacking. Do not cut main lateral tree roots or taproots; cut only smaller roots that interfere with installation of utilities. Cut roots as required for root pruning.

C. Redirect roots in backfill areas where possible. If encountering large, main lateral roots, expose roots beyond excavation limits as required to bend and redirect them without breaking. If encountered immediately adjacent to location of new construction and redirection is not practical, cut roots approximately 3 inches back from new construction and as required for root pruning.

D. Do not allow exposed roots to dry out before placing permanent backfill. Provide temporary earth cover or pack with peat moss and wrap with burlap. Water and maintain in a moist condition. Temporarily support and protect roots from damage until they are permanently relocated and covered with soil.

3.5 ROOT PRUNING

A. All pruning of roots larger than 1/2" dia. within the Protection Zone shall be performed by Southern University Landscaping Services. Contractor shall notify SU and Landscape Architect of roots requiring pruning.

B. Prune roots that are affected by temporary and permanent construction. Prune roots as follows:
   1. Cut roots manually by digging a trench and cutting exposed roots with sharp pruning instruments; do not break, tear, chop, or slant the cuts. Do not use a backhoe or other equipment that rips, tears, or pulls roots.
   2. Cut Ends: Coat cut ends of roots more than 1-1/2 inches in diameter with an emulsified asphalt or other coating formulated for use on damaged plant tissues and that is acceptable to arborist.
   3. Temporarily support and protect roots from damage until they are permanently redirected and covered with soil.
   4. Cover exposed roots with burlap and water regularly.
   5. Backfill as soon as possible according to requirements in Section 312000 "Earth Moving."

C. Root Pruning at Edge of Protection Zone: Prune roots flush with the edge of the protection zone, by cleanly cutting all roots to the depth of the required excavation.

D. Root Pruning within Protection Zone: Clear and excavate by hand to the depth of the required excavation to minimize damage to root systems. Use narrow-tine spading forks, comb soil to expose roots, and cleanly cut roots as close to excavation as possible.

3.6 CROWN PRUNING

A. All crown pruning shall be performed by Southern University Landscaping Services. Contractor shall notify SU and Landscape Architect of limbs requiring pruning.

B. Prune branches that are affected by temporary and permanent construction. Prune branches as follows:
   1. Prune trees to remain to compensate for root loss caused by damaging or cutting root system. Provide subsequent maintenance during Contract period as recommended by arborist.
   2. Pruning Standards: Prune trees according to ANSI A300 (Part 1) and the following:.
      a. Type of Pruning: Cleaning Thinning Raising Reduction.
   3. Cut branches with sharp pruning instruments; do not break or chop.
   4. Do not apply pruning paint to wounds, unless otherwise specified for disease or pest control.

C. Chip removed branches and dispose of off-site.

3.7 REGRADING

A. Lowering Grade: Where new finish grade is indicated below existing grade around trees, slope grade beyond the protection zone. Maintain existing grades within the protection zone.

B. Raising Grade: Where new finish grade is indicated above existing grade around trees, slope grade beyond the protection zone. Maintain existing grades within the protection zone.

3.8 FIELD QUALITY CONTROL

A. Inspections: Engage a qualified arborist to direct plant-protection measures in the vicinity of trees, shrubs, and other vegetation indicated to remain and to prepare inspection reports.

3.9 REPAIR AND REPLACEMENT

A. General: Repair or replace trees, shrubs, and other vegetation indicated to remain or be relocated that are damaged by construction operations, in a manner approved by Landscape Architect.
   1. Submit details of proposed root cutting and tree and shrub repairs.
   2. Have arborist perform the root cutting, branch pruning, and damage repair of trees and shrubs.
   3. Treat damaged trunks, limbs, and roots according to arborist's written instructions.
   4. Perform repairs within 24 hours.

5. Replace vegetation that cannot be repaired and restored to full-growth status, as determined by Landscape Architect.

B. Trees: Remove and replace trees indicated to remain that are more than 25 percent dead or in an unhealthy condition before the end of the corrections period or are damaged during construction operations that Landscape Architect determines are incapable of restoring to normal growth pattern.
   1. Provide new trees of same size and species as those being replaced for each tree that measures 6 inches or smaller in caliper size.
   2. Provide three new tree(s) of 6-inch caliper size for each tree being replaced that measures more than 6 inches in caliper size.
      a. Species: Species selected by Landscape Architect.
   3. Plant and maintain new trees as specified in Section 329300 "Plants."

C. Soil Aeration: Where directed by Landscape Architect, aerate surface soil compacted during construction. Aerate 10 feet beyond drip line and no closer than 36 inches to tree trunk. Drill 2-inch- diameter holes a minimum of 12 inches deep at 24 inches o.c. Backfill holes with an equal mix of augered soil and sand.

3.10 DISPOSAL OF SURPLUS AND WASTE MATERIALS

A. Disposal: Remove excess excavated material, displaced trees, trash and debris, and legally dispose of them off Owner's property.

END OF SECTION 02 23 10

SECTION 024116 - STRUCTURE DEMOLITION

PART 1 - GENERAL

1.1 SUMMARY

A. Section Includes:

1. Demolition and removal of buildings and site improvements.
2. Removing below-grade construction.
3. Disconnecting, capping or sealing, and removing site utilities.

1.2 DEFINITIONS

A. Remove: Detach items from existing construction and dispose of them off-site unless indicated to be salvaged.

B. Remove and Salvage: Detach items from existing construction, in a manner to prevent damage, and deliver to Owner ready for reuse. Include fasteners or brackets needed for reattachment elsewhere.

1.3 MATERIALS OWNERSHIP

A. Unless otherwise indicated, demolition waste becomes property of Contractor.

1.4 PREINSTALLATION MEETINGS

A. Predemolition Conference: Conduct conference at Project site.

1. Inspect and discuss condition of construction to be demolished.
2. Review structural load limitations of existing structures.
3. Review and finalize building demolition schedule and verify availability of demolition personnel, equipment, and facilities needed to make progress and avoid delays.
4. Review and finalize protection requirements.
5. Review procedures for noise control and dust control.
6. Review procedures for protection of adjacent buildings.
7. Review items to be salvaged and returned to Owner.

1.5 INFORMATIONAL SUBMITTALS

A. Qualification Data: For refrigerant recovery technician.

B. Engineering Survey: Submit engineering survey of condition of building.

C. Proposed Protection Measures: Submit report, including Drawings, that indicates the measures proposed for protecting individuals and property. Indicate proposed locations and construction of barriers.

1. Adjacent Buildings: Detail special measures proposed to protect adjacent buildings to remain.

D. Schedule of Building Demolition Activities: Indicate the following:

1. Detailed sequence of demolition work, with starting and ending dates for each activity.
2. Temporary interruption of utility services.
3. Shutoff and capping or re-routing of utility services.

E. Pre-demolition Photographs or Video: Show existing conditions of adjoining construction and site improvements, including finish surfaces, that might be misconstrued as damage caused by salvage and demolition operations. Submit documentation before the Work begins.

F. Statement of Refrigerant Recovery: Signed by refrigerant recovery technician responsible for recovering refrigerant, stating that all refrigerant that was present was recovered and that recovery was performed according to EPA regulations. Include name and address of technician and date refrigerant was recovered.

1.6 CLOSEOUT SUBMITTALS

A. Inventory: Submit a list of items that have been removed and salvaged.

1.7 FIELD CONDITIONS

A. Buildings to be demolished will be vacated and their use discontinued before start of the Work.

B. Buildings immediately adjacent to demolition area will be occupied. Conduct building demolition so operations of occupied buildings will not be disrupted.

1. Provide not less than seven days' notice of activities that will affect operations of adjacent occupied buildings.
2. Maintain access to existing walkways, exits, and other facilities used by occupants of adjacent buildings.

a. Do not close or obstruct walkways, exits, or other facilities used by occupants of adjacent buildings without written permission from authorities having jurisdiction.

C. Conditions existing at time of inspection for bidding purpose will be maintained by Owner as far as practical.

1. Before building demolition, Owner will remove all contents that Owner wishes to keep.

D. Hazardous Materials: Present in buildings and structures to be demolished. A report on the presence of hazardous materials is on file for review and use. Examine report to become aware of locations where hazardous materials are present.

1. Hazardous material remediation is specified elsewhere in the Contract Documents.
2. Do not disturb hazardous materials or items suspected of containing hazardous materials except under procedures specified elsewhere in the Contract Documents.

E. On-site storage or sale of removed items or materials is not permitted.

1.8 COORDINATION

A. Arrange demolition schedule so as not to interfere with Owner's on-site operations or operations of adjacent occupied buildings.

PART 2 - PRODUCTS

2.1 PERFORMANCE REQUIREMENTS

A. Regulatory Requirements: Comply with governing EPA notification regulations before beginning demolition. Comply with hauling and disposal regulations of authorities having jurisdiction.

B. Standards: Comply with ANSI/ASSP A10.6 and NFPA 241.

2.2 SOIL MATERIALS

A. Satisfactory Soils: Comply with requirements in Section 312000 "Earth Moving."

PART 3 - EXECUTION

3.1 EXAMINATION

A. Verify that utilities have been disconnected and capped before starting demolition operations.

B. Review Project Record Documents of existing construction or other existing condition and hazardous material information provided by Owner. Owner does not guarantee that existing conditions are same as those indicated in Project Record Documents.

C. Perform an engineering survey of condition of building to determine whether removing any element might result in structural deficiency or unplanned collapse of any portion of structure or adjacent structures during building demolition operations.

D. Steel Tendons: Locate tensioned steel tendons and include recommendations for de-tensioning.

E. Verify that hazardous materials have been remediated before proceeding with building demolition operations.

3.2 PREPARATION

A. Refrigerant: Before starting demolition, remove refrigerant from mechanical equipment according to 40 CFR 82 and regulations of authorities having jurisdiction.

B. Salvaged Items: No items to be salvaged by the contractor.

3.3 UTILITY SERVICES AND MECHANICAL/ELECTRICAL SYSTEMS

A. Existing Utilities to Be Disconnected: Locate, identify, disconnect, and seal or cap off utilities serving buildings and structures to be demolished.

1. Owner will arrange to shut off utilities when requested by Contractor.
2. Arrange to shut off utilities with utility companies.
3. If removal, relocation, or abandonment of utility services will affect adjacent occupied buildings, then provide temporary utilities that bypass buildings and structures to be demolished and that maintain continuity of service to other buildings and structures.
4. Cut off pipe or conduit a minimum of 36 inches below grade. Cap, valve, or plug and seal the remaining portion of pipe or conduit after bypassing according to requirements of authorities having jurisdiction.
5. Do not start demolition work until utility disconnecting and sealing have been completed and verified in writing.

3.4 PROTECTION

A. Existing Facilities: Protect adjacent walkways, loading docks, building entries, and other building facilities during demolition operations. Maintain exits from existing buildings.

B. Temporary Shoring: Provide and maintain interior and exterior shoring, bracing, or structural support to preserve stability and prevent unexpected movement or collapse of construction being demolished.

1. Strengthen or add new supports when required during progress of demolition.

C. Existing Utilities to Remain: Maintain utility services to remain and protect from damage during demolition operations.

1. Do not interrupt existing utilities serving adjacent occupied or operating facilities unless authorized in writing by Owner and authorities having jurisdiction.
2. Provide temporary services during interruptions to existing utilities, as acceptable to Owner and authorities having jurisdiction.

    a. Provide at least seven days' notice to occupants of affected buildings if shutdown of service is required during changeover.

D. Temporary Protection: Erect temporary protection, such as walks, fences, railings, canopies, and covered passageways, where required by authorities having jurisdiction and as indicated. Comply with requirements in Section 015000 "Temporary Facilities and Controls."

1. Protect adjacent buildings and facilities from damage due to demolition activities.
2. Protect existing site improvements, appurtenances, and landscaping to remain.
3. Erect a plainly visible fence around drip line of individual trees or around perimeter drip line of groups of trees to remain.
4. Provide temporary barricades and other protection required to prevent injury to people and damage to adjacent buildings and facilities to remain.
5. Provide protection to ensure safe passage of people around building demolition area and to and from occupied portions of adjacent buildings and structures.
6. Protect walls, windows, roofs, and other adjacent exterior construction that are to remain and that are exposed to building demolition operations.
7. Erect and maintain dustproof partitions and temporary enclosures to limit dust, noise, and dirt migration to occupied portions of adjacent buildings.

E. Remove temporary barriers and protections where hazards no longer exist. Where open excavations or other hazardous conditions remain, leave temporary barriers and protections in place.

3.5 DEMOLITION, GENERAL

A. General: Demolish indicated buildings and site improvements completely. Use methods required to complete the Work within limitations of governing regulations and as follows:

1. Do not use cutting torches until work area is cleared of flammable materials. Maintain portable fire-suppression devices during flame-cutting operations.
2. Maintain fire watch during and for at least 4 hours after flame-cutting operations.
3. Maintain adequate ventilation when using cutting torches.
4. Locate building demolition equipment and remove debris and materials so as not to impose excessive loads on supporting walls, floors, or framing.

B. Site Access and Temporary Controls: Conduct building demolition and debris-removal operations to ensure minimum interference with roads, streets, walks, walkways, and other adjacent occupied and used facilities.

1. Do not close or obstruct streets, walks, walkways, or other adjacent occupied or used facilities without permission from Owner and authorities having jurisdiction. Provide alternate routes around closed or obstructed trafficways if required by authorities having jurisdiction.
2. Use water mist and other suitable methods to limit spread of dust and dirt. Comply with governing environmental-protection regulations. Do not use water when it may damage adjacent construction or create hazardous or objectionable conditions, such as ice, flooding, and pollution.

C. Explosives: Use of explosives is not permitted.

3.6 DEMOLITION BY MECHANICAL MEANS

A. Proceed with demolition of structural framing members systematically, from higher to lower level. Complete building demolition operations above each floor or tier before disturbing supporting members on the next lower level.

B. Remove debris from elevated portions of the building by chute, hoist, or other device that will convey debris to grade level in a controlled descent.

1. Remove structural framing members and lower to ground by method suitable to minimize ground impact and dust generation.

C. Salvage: Items to be removed and salvaged are indicated below:

1. The buildings are currently occupied. The Ownership Team will remove the interior contents before the notice to proceed from the Owner. Any miscellaneous items remaining in the buildings shall be removed from the site and are considered construction debris.

D. Below-Grade Construction: Demolish foundation walls and other below-grade construction.

1. Remove below-grade construction, including basements, foundation walls, and footings, to at least 48 inches below grade. If deep foundations are discovered, remove them to a depth of 48 inches and provide a survey of the locations of the deep foundations.

E. Existing Utilities: Demolish and remove existing utilities and below-grade utility structures.

3.7 SITE RESTORATION

A. Below-Grade Areas: Rough grade below-grade areas ready for further excavation or new construction.

B. Below-Grade Areas: Completely fill below-grade areas and voids resulting from building demolition operations with satisfactory soil materials according to backfill requirements in Section 312000 "Earth Moving" or as recommended in the geotechnical report.

C. Site Grading: Uniformly rough grade area of demolished construction to a smooth surface, free from irregular surface changes. Provide a smooth transition between adjacent existing grades and new grades.

3.8 REPAIRS

A. Promptly repair damage to adjacent buildings caused by demolition operations.

3.9 DISPOSAL OF DEMOLISHED MATERIALS

A. Remove demolition waste materials from Project site and dispose of them in an EPA-approved construction and demolition waste landfill acceptable to authorities having jurisdiction.

1. Do not allow demolished materials to accumulate on-site.
2. Remove and transport debris in a manner that will prevent spillage on adjacent surfaces and areas.

B. Do not burn demolished materials.

3.10 CLEANING

A. Clean adjacent structures and improvements of dust, dirt, and debris caused by building demolition operations. Return adjacent areas to condition existing before building demolition operations began.

1. Clean roadways of debris caused by debris transport.

END OF SECTION 024116

SECTION 028210 - REMOVAL OF ASBESTOS-CONTAINING MATERIALS

PART 1.0 GENERAL

1.1 DESCRIPTION OF WORK:

A. The work specified within this section includes the removal of asbestos-containing materials described herein. The Contractor shall utilize only trained and qualified workers in the removal, handling, and disposal of these materials. The contractor's work practices and methods shall comply will all applicable Federal, State, and local regulations.

B. The Contractor shall furnish all labor, materials, equipment, medical records, testing, insurance, patents, and incidentals, which are necessary or required to complete the work safely.

C. The Contractor shall furnish and maintain the electrical power and water to the site for the Contractors and Air Monitoring use and equipment.

1.2 APPLICABLE PUBLICATIONS:

The publications listed below form a part of this specification to the extent referenced. The publications are referenced in text by basic designation only. The latest publication shall apply.

A. Environmental Protection Agency (EPA):

Regulations for Asbestos (Code of Federal Regulations, Title 40, Part 61), National Emission Standard for Hazardous Air Pollutants (NESHAP), Guidance for Controlling Friable Asbestos Containing Materials in Buildings, Asbestos Hazard Emergency Response Act (AHERA) (40 CFR, Part 763).

B. Occupational Safety and Health Administration (OSHA): Asbestos Regulations (Code of Federal Regulations Title 29, Part 1901, Sections 1915.1001 and 1926.1101), 1910 Section 1200 Hazard Communication, Section 145 Signs and Tags, and Section 2 Access to Employee Exposure and Medical Records.

C. National Institute for Occupational Safety and Health (NIOSH): Respiratory Protection, A Guide for the Employee.

D. American National Standards Institute (ANSI): Z86.1-1973, Commodity Specification for Air.

E. Louisiana Administrative Codes (LAC), Title 33, Part III, Chapters 27 and 51, and Louisiana Department of Environmental Quality (LADEQ) and Louisiana Emissions Standard for Hazardous Air Pollutants (LESHAP).

1.3 DEFINITIONS:

A. Refer to Section 011100 for terms and definitions used in these Contract Documents.

1.4 SUBMITTALS:

A. Refer to Section 011100 for Contractor submittal requirements.

1.5 RESPIRATORY AND PERSONNEL PROTECTION AND DECONTAMINATION:

A. Refer to Sections 011100 and 028210 for Contractor respiratory and personnel protection and decontamination requirements.

1.6 WASTE DISPOSAL:

A. Refer to Section 028240 for Contractor waste disposal requirements.

PART 2.0 PRODUCTS

2.1 GENERAL REQUIREMENTS:

A. The Contractor shall deliver all materials to the site in the original containers bearing the name of the manufacturer and details for proper storage and usage.

B. All materials or equipment delivered to the site shall be unloaded, temporarily stored, and transferred to the Work Area in a manner which shall not interfere with the operations of the building occupants.

C. Unloading and temporary storage sites, and transfer routes, must be approved in advance by the Architect and the Owner.

D. Damaged or deteriorated materials may not be used and must be promptly removed from the premises. Material which becomes contaminated with asbestos-containing material shall be packaged and legally disposed of in an approved landfill.

E. Techniques, procedures, and equipment required by these specifications may be covered by one or more U.S. and/or foreign patents. It is the sole responsibility of the Contractor to determine what, if any, patents are applicable and to meet the requirements of the patent owner, including fees regarding the use of these patents.

2.2 MATERIALS, TOOLS, AND EQUIPMENT:

A. All materials, tools, and equipment must comply at a minimum with these specifications, and relevant Federal, State, and local codes. For the construction of containment barriers, work platforms, and Decontamination Facilities, all lumber and plywood shall be fire-retardant. Flame-resistant polyethylene film shall conform to requirements set forth in the National Fire Protection Association, shall be fire-retardant, and shall bear manufacturer's stamp of Underwriters Laboratory (UL) Classification.

Any equipment used that prevents the analysis of air samples by Phase Contrast Microscopy is unacceptable and cannot be used.

1. HEPA-Filtered Exhausts - Air inside each work area shall be exhausted to the atmosphere (building exterior) through a High Efficiency Particulate Air (HEPA) filter. HEPA-filtered portable exhaust units shall be provided for each work area, of sufficient total capacity to provide at least six (6) complete air changes per hour, an inward velocity through all openings to the work area of at least 200 ppm, and a static pressure of at least 0.025 inches water column.

   The HEPA filter shall be preceded by replaceable prefilters, and the unit must be designed such that it cannot be operated unless the HEPA filters are in place. The units must also be designed with lights or alarms, which indicate that the filters are properly installed and functional, and which determine when the filters must be changed.

   Flexible hoses (ducts) of sufficient length must be provided to allow the units to discharge outside of the buildings. Exhaust with other types of particulate cleaning systems (such as electrostatic precipitators) shall not be allowed.

2. Plastic Sheeting and Bags - These shall be polyethylene or equivalent. Both transparent and opaque plastic shall be required, as directed by the Owner's Representative. Flame-resistant polyethylene shall be used.

3. Encapsulants - Encapsulating or lock-down agents shall be penetrating sealants. Due to subsequent renovation plans, the Contractor shall lock down all surfaces with a water-based and water-soluble encapsulant pre-approved by the Designer. The water-based, water-soluble encapsulant shall be able to do following:

   a. Withstand most impact or abrasion and protect the encapsulant surface.

   b. Be one of those demonstrating effective performance under the tests conducted by an independent testing laboratory, pre-approved by the Designer.

   c. Shall have high flame-retardant characteristics less than 25 when tested in accordance with ASTM E-84 procedures, and a low toxic fume and smoke emission rating.

   d. Shall not be noxious or toxic to application workers, or subsequent users of the building.

e. Shall have some permeability to water vapor to prevent condensation accumulation and shall resist solution by common cleaning agents.

f. Shall have acceptable weathering and aging characteristics.

It is the Contractor's responsibility to ensure that encapsulants will be compatible with all replacement materials. The Contractor shall coordinate this requirement with the Designer and Architect.

4. Wetting Agent or Surfactant – This item shall be 50% polyoxyethylene ether and 50% polyoxyethylene ester, or equivalent, mixed in the proportion of one ounce surfactant per five gallons of water. The material must be odorless, non-flammable, non-toxic, non-irritating, and non-carcinogenic. It shall be applied using a low-pressure sprayer recommended by the surfactant manufacturer.

5. Tape and Glue - These items shall be capable of sealing plastic joints, and attaching plastic to finished surfaces without damage when they are removed. The bonding strength and resulting seal integrity must not be affected by mist of water, encapsulating agent, or any other materials to be used in the Work Area.

6. Warning Signs and Labels - These items shall comply with 29 CFR 1926.1101 (K), and with all other federal, state, or local codes and regulations.

7. Waste Containers and Transportation - These items shall be bags as noted in Subparagraph 2 above, drums or other closed containers, suitable for loading, temporary storage, transit, and unloading of contaminated waste without rupture or otherwise causing spillage or exposure to persons or emissions to the atmosphere. Transportation methods shall comply with the provisions of EPA Title 40, Part 61, Subparts A and B, Part 262, and with any hazardous or special waste regulations for temporary storage, transport, and disposal if such codes are enforced in states or cities where the waste will be generated, stored, transported or disposed of. All containers shall be labeled in accordance with 29 CFR 1926.58K(2) and 49 CFR, Parts 171 and 172, Hazardous Substances: Final Rule.

8. Respiratory Protection Devices - These items shall be NIOSH-approved and shall comply with all provisions of 29 CFR 1926.1101. Fit testing procedures must comply with 29 CFR 1926.1101, Appendix C. Provide documentation of fit-testing procedure.

9. Electrical Equipment – All electrical items shall be Underwriters Laboratory listed and approved, and shall have ground fault circuit interruption protection, which has been installed by a qualified electrician.

10. Ladders or Scaffolds - These items shall be approved and be of sufficient dimensions and quantities so that all work surfaces can be easily and

safely accessed by the Environmental Consultant, workers, and other inspectors. Scaffold joints and ends shall be sealed with tape to prevent incursion of asbestos fibers or particulate. The use of aluminum ladders inside the work area is prohibited.

11. Hand Power Tools - These items shall be equipped with HEPA-filtered local exhaust ventilation if used to drill out, into, or otherwise disturb ACM.

12. Brushes - All brushes shall have nylon bristles. Wire brushes are excluded from use due to their potential to shred asbestos fibers into small fibers. Wire brushes may be used on pipe joint applications upon prior written approval by the Designer.

2.3 USE OF EXISTING EQUIPMENT

The Contractor is responsible for the obtaining electricity and water to the Site for the duration of the Project. The Contractor shall ensure there is adequate power for all phases of the Work and for the Air Monitoring Consultant's Work.

A. Electricity: The Contractor is responsible for providing his own electricity to the Site. Currently there is no power available in the building or building Site for the Contractor's use. All costs associated with testing, installation, inspection, coordination, provision, and total usage of electricity are the responsibility of the Contractor.

B. Water: The Contractor is responsible for providing his own water to the Site. Currently there is no Water in the building or the Site for the Contractor's use. The Contractor must make other arrangements to provide water; all costs associated with testing, installation, inspection, coordination, provision, and total usage of water are the sole responsibility of the Contractor.

PART 3.0 EXECUTION

3.1 GENERAL:

A. The requirements and sequences described herein are parameters for execution of the abatement work and do not necessarily include all abatement requirements. The Contractor shall be responsible for all items that may be necessary to complete the abatement work in accordance with the approved Work Plan, Scope of Work, and all applicable regulations. All deviations from the Work Plan must be pre-approved in writing by the Designer.

B. All building interior removal work shall be performed using full containment, protection with HEPA-filtered exhaust ventilation, and decontamination facilities, wearing full body personal and respiratory protection and hard hats and protective boots.

3.2 PREABATEMENT PREPARATIONS: The Contractor shall prepare the work areas using plans preapproved by the Designer. The following is a general sequence of performance steps and procedures to ensure that proper containment and protection systems are installed prior to any work, which could generate airborne asbestos fibers or particulate.

A. Post access restriction signs; seal all openings into each work area; clean, decontaminate, protect, and cover all fixed items; and erect or install containment barriers, scaffolding, and decontamination facilities and HEPA-exhaust systems as described herein.

B. The Contractor shall be responsible for providing his own water and electricity. The Contractor is responsible for coordinating provision of utilities to the job site directly with the utility agencies or generating electrical power and bringing water to the Site. Provision of utilities to the job site shall be borne by the Contractor.

C. Provide temporary power and lighting equipped with ground fault interrupter (GFI) devices as required for each work area and affected non-work areas. (See Paragraph 3.2.)

D. Obtain Environmental Consultant approval, in writing, of all completed preparation work.

3.3 ISOLATION OF ELECTRICAL SYSTEMS AND INSTALLATION OF TEMPORARY POWER AND LIGHTING:

A. The scope of the required electrical isolation and protection work includes isolation and protection of electrical equipment, which is in the area from which asbestos must be removed, and which could possibly become a hazard through contact or water spray short-circuiting. Care must be taken when working near electrical panels. The Contractor shall provide labor to monitor, inspect, and service temporary power circuits, lighting, and equipment as required by local codes and regulations. Contractors must provide "Lock Out" systems on all electrical panels or equipment, which will be shutoff during the removal process. If electrical panels, transformers, or control centers cannot be deactivated/de-energized, the Contractor shall ensure that these electrical panels, transformers, control centers, or fire protection panels are isolated utilizing rigid critical barriers, fire retardant 6-mil polyethylene sheeting, and ventilated as required.

B. The electrical isolation work includes the installation of temporary lighting and power protected by ground fault interrupter (GFI) devices in accordance with applicable codes.

C. Temporary light shall be provided by the Contractor in each Work Areas where abatement is performed. A qualified electrician shall initially inspect the (removal work areas) for the condition of electrical conduit and junction boxes. All temporary electrical work shall comply with NFPA 70 National Electric Code. The purpose of this inspection is to assist the Contractor in the preparation and performance of his work, and to provide for the safety of work crews.

D. The Contractor shall be required to furnish, without additional expense, all transportation, labor, and materials necessary to maintain the electrical systems for safe operation, and to maintain service in areas abutting work area in compliance with local codes.

E. All materials and workmanship shall conform with the latest editions of the following codes, standards, and specifications issued by the following authorities:

1. National Electrical Code (NEC) - most recent edition.

2. National Bureau of Standards, Handbook H30, National Electrical Safety Code.

3. State and Local Codes, and all other authorities having jurisdiction.

4. Underwriter Laboratories (UL).

5. National Board of Fire Underwriters.

6. Occupational Safety and Health Administration (OSHA).

F. Temporary lighting and power systems shall comply with all Federal, State, and local regulations. Temporary lighting levels shall meet these requirements.

G. When switching circuits at panels, the Contractor's licensed electrician shall review the existing conditions. The Contractor shall not shut down any circuits without the advanced notification and approval of the Owner.

H. Contractor costs associated with the isolation of electrical systems and installation of temporary power and lighting shall be borne by the Contractor.

I. Extension cords shall be the 3-wire type; shall be protected from damage; and shall not be fastened with staples, hung from nails, or suspended from wires. Splices shall have soldered wire connection with insulation equal to the cable. Worn or frayed cords shall not be used.

J. Safe lighting equipment shall be provided with a preference for floodlights rather than indiscriminate use of unprotected lamps strung on temporary wiring. Exposed bulbs shall be guarded to prevent accidental contact. Temporary wiring shall be properly insulated and substantially supported. Circuits shall be properly designed and fused. All temporary lighting inside the work area shall be weather proofed.

K. Receptacles for attachment plugs shall be an approved, concealed contact type. Where different voltages, frequencies, or types of current are supplied, receptacles shall be of such design that attachment plugs are not interchangeable.

3.4 INSTALLATION OF SCAFFOLDING AND/OR WORK PLATFORMS:

A. The Contractor shall install and erect sufficient scaffolding and/or work platforms to access all areas and complete all tasks involved in the abatement activities.

B. Installation and erection of scaffolding and/or work platforms must be done in strict compliance with all applicable Federal, State, and local laws and regulations.

C. The Contractor is responsible for removing any loose or hanging materials and installing adequate shoring to provide and maintain a safe work environment.

D. The Contractor must maintain public access to city sidewalks, as required by law, throughout the entire abatement project. The Contractor is responsible for obtaining necessary permits involved in erecting scaffolding and/or fencing on public property. The Contractor will be responsible for repairing all damage caused by scaffolding or fencing during abatement.

3.5 ISOLATION OF WORK AREAS AND INSTALLATION OF DECONTAMINATION FACILITIES:

A. The Contractor shall isolate the Work Area for the duration of the work by completely closing and sealing all openings and penetrations into the Work Area using a minimum two (2) layers of 6-mil polyethylene sheeting, with joints staggered, and taped securely in place. The work area shall be sealed airtight and watertight to the maximum extent possible and shall be subject to the written approval of the Environmental Consultant.

B. Isolation Partitions and Barriers

1. The Contractor shall install scaffolding and/or work platforms and necessary shoring to provide worker access and install approved safety railings, the plates, etc. The Contractor shall coordinate scaffolding with supplier and install in a manner that is adequate and safe to meet existing building structure load capabilities and capacities. The Contractor shall coordinate scaffolding loads on existing floor systems. Scaffolding supplier to provide design (as necessary) sealed and signed by a licensed Engineer.

2. The Contractor shall install critical barrier walls as designated on the drawings, using 2" x 4" stud or metal framing 24" on center, adequately supported and anchored, into concrete surface covered with 5/8" (fire rated) sheet plywood, all seams caulked airtight. All temporary enclosures and walls shall have a flame spread of 0-200 and a smoke developed of 0-450.

C. The Contractor shall install decontamination facilities for all work areas as defined herein, using plans preapproved by the Environmental Consultant.

D. The Contractor shall cover critical barriers, scaffold planks, and work platforms with a minimum of two (2) layers of 6-mil polyethylene sheeting with joints staggered and taped securely in place.

E. The Contractor shall line both sides of walls, ceilings, and floors of decontamination facilities using a minimum of two (2) layers of 6-mil polyethylene sheeting with joints staggered and taped securely in place.

F. The Contractor shall provide GFI-protected temporary power and lighting to work areas and ensure safe installation of temporary power sources and equipment.

G. The Contractor shall install HEPA-filtered exhaust systems and automatic air pressure differential recording instruments in work areas as previously specified using plans preapproved by the Designer.

H. The Contractor shall install wastewater collection system, filtration, storage and discharge systems and install waste holding facilities.

I. The Contractor shall post warning signs meeting the requirements of 29 CFR 1926.1101 and post hazard warning signs at the doorway to decontamination facility(ies) which shall be the only non-emergency entrance into the work areas. Post warning signs at all other potential access locations as indicated by the Environmental Consultant.

J. The Contractor shall cover and protect electric panels and fixed equipment and objects.

K. The Contractor shall clean and decontaminate all surfaces inside the work area. Seal all openings and penetrations into work area.

L. Before commencing work within the work area the Contractor shall inspect the work enclosure for breaches and smoke test for leaks, and any leaks shall be sealed properly.

M. The Contractor shall maintain emergency exits as required by regulating agencies for all work areas and mark with reflective tape or paint.

3.6 APPROVAL OF PREPARATION WORK:

A. After, the work areas has been prepared according to plans pre-approved by the Designer. the Contractor shall request a formal site inspection by the Environmental Consultant. No removal or other disturbance of asbestos-containing materials, dust, or debris shall occur until the Environmental Consultant has inspected and approved the site preparation work in writing.

3.7 CLEANING OF CONTAMINATED SURFACES:

A. This section pertains to the cleaning of surfaces, which are potentially contaminated with asbestos containing dust and debris or discovered in the

performance of the specified work. Such cleaning shall be required to prevent this dust from becoming airborne and posing an exposure risk to building occupants or interfering in air monitoring activities. (See paragraph 3.8 for Removal and Cleaning Procedures).

Cleaning actions shall be performed as preliminary exposure control procedures prior to performing other actions which are required.

Cleaning shall consist of HEPA-vacuuming followed by wet mopping of surfaces in a manner which prevents dust generation, but effectively rids the surface of all visible debris, dust, film, and grime.

B. Each HEPA vacuum cleaner shall be separately equipped with an airtight, securely attached hose, of proper length, and a collection wand, brush, and other special attachments appropriate to the required cleaning tasks. The equipment shall be properly always operated and shall contain no air leaks. The Environmental Consultant shall inspect all vacuuming equipment prior to its use and may request verification of the efficiency of the equipment's filtration.

3.8 REMOVAL PROCEDURES:

This section applies to removal of all materials containing contaminated or potentially contaminated with asbestos, as stated herein or as otherwise indicated by the Designer. All removal work shall be done using wet methods in such a way as to minimize the release of fibers, dust, or particulate into the air. All removal methods must be in accord with all Federal, State and local regulations and these specifications, and must be pre-approved by the Environmental Consultant.

The Contractor is responsible for thoroughly cleaning one or more representative areas inside each contained area to the satisfaction of the Environmental Consultant to be used by the Environmental Consultant to establish a standard of cleanliness. Completion of removal stages must be approved by the Environmental Consultant in writing.

The Contractor is responsible for protecting all previously cleaned and cleared areas throughout all abatement processes. The Contractor will clean and decontaminate all previously cleaned and cleared areas, which become contaminated during subsequent removal activities.

A. Removal of Thermal System Insulation on Piping and Ducts:

1. The Contractor is responsible for removing and disposal of the thermal system insulation on piping, as shown in the drawings. Remove bare substrate, as necessary, to achieve a smooth level surface.

2. The Contractor shall thoroughly wet material and maintain it in a wet condition.

3. The Contractor shall carefully remove insulation material from pipe substrate or wall surface, using hand-held or other suitable tools or equipment.

4. The Contractor shall promptly place material in 6-mil polyethylene or other suitable bags or containers. Accumulation of debris inside the work area is prohibited.

5. The Contractor shall collect and pump all wastewater through a five (5) micron filter (multi-staged filtration system).

6. The Contractor shall dispose of all insulation material in accordance with Section 028240, Disposal of Asbestos Materials.

7. The Contractor shall remove to the bare pipe substrate or wall surface. Removal is complete only when a clean surface remains.

B. Removal of Floor Tiles, Underlayment, Leveling Compound, Base and Associated Mastic Materials and Layers:

1. The Contractor is responsible for the removal and disposal of Floor Tiles, Under Lament, Leveling Compound, Base and Associated Mastic Materials and Layers, as shown on the drawings. Remove to bare concrete substrate.

2. The Contractor shall thoroughly wet material and maintain it in a wet condition.

3. The Contractor shall carefully remove materials from substrate, using hand-held or other suitable tools or equipment.

4. The Contractor shall promptly place materials in 6-mil polyethylene or other suitable bags or containers. Accumulation of debris inside the work area is prohibited.

5. The Contractor shall collect and pump all wastewater through a five (5) micron filter (multi-staged filtration system).

6. The Contractor shall dispose of all material in accordance with Section 028240.

7. The Contractor shall remove to clean substrate surface. Removal is complete only when clean surfaces remain.

C. Removal of Window Sealant Glazing Caulk:

1. The Contractor is responsible for removing and disposal of the window glazing caulk, as shown on the drawings. Remove to bare substrate, as necessary, to achieve a smooth level surface.

2. The Contractor shall thoroughly wet material and maintain it in a wet condition.

3. The Contractor shall carefully remove material from the substrate or wall, using hand-held or other suitable tools or equipment.

4. The Contractor shall promptly place material in 6-mil polyethylene or other suitable bags or containers. Accumulation of debris inside the work area is prohibited.

5. The Contractor shall collect and pump all wastewater through a five (5) micron filter (multi-staged filtration system).

8. The Contractor shall dispose of all insulation material in accordance with Section 02 82 40, Disposal of Asbestos Materials.

9. The Contractor shall remove to bare substrate surface. Removal is complete only when a clean, surface remains.

D. Removal of Designated Drywall Ceilings and Walls:

1. The Contractor is responsible for the removal and disposal of Ceilings and walls, as shown on the drawings and to access asbestos-containing materials. Remove to bare substrate.

2. The Contractor shall thoroughly wet material and maintain it in a wet condition.

3. The Contractor shall carefully remove materials from substrate, using hand-held or other suitable tools or equipment.

4. The Contractor shall promptly place materials in 6-mil polyethylene or other suitable bags or containers. Accumulation of debris inside the work area is prohibited.

5. The Contractor shall collect and pump all wastewater through a five (5) micron filter (multi-staged filtration system).

6. The Contractor shall dispose of all material in accordance with Section 02 82 40, Disposal of Asbestos Materials.

7. The Contractor shall remove to clean substrate surface. Removal is complete only when clean surfaces remain.

3.9 OWNER'S REPRESENTATIVE'S APPROVAL OF REMOVAL WORK:

A. Upon completion of removal work, but prior to commencing encapsulation or other final cleaning of the work area, the Contractor shall request the Environmental Consultant to conduct an inspection and obtain written approval of the removal work.

B. All materials shall be removed, gross debris cleaned up, wastewater collected and filtered, and waste bags removed from the Work Areas prior to the inspection.

C. Any encapsulation or lock-down performed prior to the Environmental Consultant approval will require the Contractor to re-clean the entire work area to the satisfaction of the Environmental Consultant.

3.10 CLEANING AND FINAL DECONTAMINATION:

This section applies to cleaning work areas where asbestos removal work has been performed. After all asbestos-containing or contaminated materials have been removed the Contractor shall remove all waste and perform a thorough multi-stage final cleanup and decontamination of each work area per the methods indicated below. Completion of this stage of work must be approved by the Environmental Consultant.

A. Final clearance procedures of the work areas shall be performed only after all waste is packaged and removed, but prior to dismantling any barrier, decontamination facility, or protective coverings. Cleaning shall be subject to the Environmental Consultant's approval based on visual inspections, surface dust-wipe tests, and air testing performed according to the AHERA standard. HEPA-exhaust systems will operate continuously throughout the cleaning and air testing processes until the Environmental Consultant authorizes their shutdown and removal from the site. The Contractor shall notify the Environmental Consultant in writing at least 24 hours in advance of the expected completion time of final site clearance to allow the scheduling of clearance testing.

B. Cleaning methods and approvals shall consist of the following steps performed in the listed order:

1. Remove all visible debris and particulate from protective coverings, scaffolding, floors, walls equipment, and all other surfaces. HEPA-vacuum all surfaces to pick up excess water and debris.

2. Thoroughly clean all protective coverings, scaffolding, floors, walls, and equipment.

3. The air in each work area shall then be lightly mist with amended water, and all protective coverings and other items in the work area shall be wiped thoroughly clean.

4. After the Contractor has completed steps 1-3, he shall make a formal request to the Environmental Consultant for a work area inspection. To facilitate scheduling of this inspection, the Contractor shall notify the

Environmental Consultant of the anticipated completion time of the above initial cleaning work 24 hours in advance.

5. If the Environmental Consultant observes any waste or debris in the work area during the inspection, the Contractor shall perform additional cleaning and decontamination as directed by the Environmental Consultant.

6. If the Environmental Consultant approves this first cleaning, the Contractor shall remove slowly one layer of protective polyethylene covering surfaces inside the work area (except as indicated below) and shall package them in 6-mil waste bags. The waste bags shall be removed from the work area. Both layers of protective polyethylene in the decontamination facilities shall remain in place and in use.

7. After these protective coverings are removed, the Work Area shall be completely wet wiped and HEPA-vacuumed.

8. Once the work area is completely dry, the Environmental Consultant will perform an inspection of the Work Area.

9. Upon obtaining the Environmental Consultant approval, the Contractor shall lock-down all surfaces within the Work Area. The Contractor may only lock-down surfaces using an encapsulant pre-approved by the Environmental Consultant. The drying time shall be as specified by the manufacturer before clearance sampling is conducted.

10. If any of the post-cleaning clearance air or wipe sample results are above the pre-established clearance criteria, the Environmental Consultant will require additional cleaning and decontamination of the work area, and the above inspection and clearance tests shall be repeated by the Environmental Consultant. The cost for repeated tests due to failure caused by the Contractor shall be, borne by the Contractor at no additional cost to the Owner.

11. After successful completion of the final air clearance testing, the Contractor shall carefully remove the protective coverings, decontamination facilities, and any temporary barrier walls or tunnels. The HEPA-exhaust systems shall be removed only after all other items are removed. A HEPA vacuum shall be kept on-site during this final disassembly work to clean up any dust or debris. Additionally testing due to failure shall be borne by the Contractor.

12. Workers shall wear approved respiratory and personal protective equipment throughout all cleanup and waste disposal activities.

3.11 MONITORING AND TESTING: The performance and execution of this work is found in Section 014110, Air Monitoring - Test Laboratory Services and Section 014929 "Testing Laboratory Services".

3.12 AIR MONITORING BY CONTRACTOR:

A. The Contractor shall be responsible for personnel air monitoring to document compliance of workers with the OSHA regulations using the methods as described in Section 014110, Air Monitoring and Section 014929 "Test Laboratory Services".

3.13 FINAL INSPECTION AND TESTING:

A. Following successful completion of the final visual inspection, the Contractor will be given written approval by the Environmental Consultant to lock-down each Work Area. When this is complete and after all the visible dirt, dust, and grime has been removed from all surfaces in each Work Area, the Contractor shall notify the Environmental Consultant that the workspace is ready for inspection and final air clearance testing. The Environmental Consultant, with the assistance of the Contractor, shall visually inspect the workspace for the detection of any visible dust or contamination. If the visual inspection does not reveal any dust or other signs of contamination, final air testing shall commence. Approval of each Work Area for final air testing shall be obtained from the Environmental Consultant in writing. The Contractor shall supply adequate lighting, scaffolding, ladders, and other necessary assistance during final visual inspection.

B. Final air testing of the building interior will be conducted at the completion of each phase of work. The Contractor shall install engineering controls and barriers so as to isolate each area for final air clearance testing. Isolation barriers and access routes must be preapproved in the Work Plan by the Designer.

C. Final air testing (i.e., clean air certification) shall be performed pursuant to 40 CFR, Part 763, Appendix A, using Transmission Electron Microscopy (TEM), aggressive disturbance procedures, and continuous air circulation and HEPA-filtered exhaust. This shall be obtained by use of 1-horsepower leaf blowers (provided by Contractor) and the existing work area exhaust system, supplemented with 20-inch circulating fans (provided by Contractor and positioned where the Environmental Consultant determines with smoke tubes that poor air circulation patterns exist). Work areas with less than 160 square feet or 260 Linear feet of asbestos-removal shall be considered complete following the passage of the visual inspection and final air testing via Phase Contrast Microscopy (PCM).

D. The Contractor shall assist, as necessary, the Environmental Consultant to accomplish safely and efficiently the aggressive disturbance and air circulation tasks. The Contractor also shall provide and install sufficient 15-amp, 120 v. (60-cyl) power lines for the Environmental Consultant's air pumps evenly distributed in the work area, plus air pumps evenly distributed outside the work area. The Environmental Consultant then shall collect all air clearance samples.

E. The Contractor shall allow 24 hours for performance of aggressive disturbance procedures and collection of clearance air samples, and an additional 24 hours for laboratory TEM analyses of samples. Provisions will be made to perform PCM analysis on-site. The Contractor shall coordinate with the air monitoring firm to properly schedule clearance sampling and laboratory analysis.

F. The aggressive disturbance procedures shall not commence until the Work Area is clean, all floor and wall polyethylene sheeting is removed, with all of the critical barriers in place, the lock-down agent is completely dry, and the Work Area has been inspected and approved by the Environmental Consultant.

G. The final air testing shall take place under active agitation of the air in the workspace with the HEPA-filtered exhaust units operating. The Contractor shall also supply and operate additional circulating fans and leaf blowers as required and directed by the Environmental Consultant during this final testing to ensure effective air circulation. The final test shall consist of collecting a minimum of thirteen (13) air samples for each testing to establish that contamination levels do not exceed 0.01 fibers per cubic centimeter (f/cc) and 70 structures per millimeter squared (s/mm2) of asbestos as determined by air sampling with analysis by Transmission Electron Microscopy.

H. If all clearance criteria are not met, the Contractor shall perform a thorough wet cleaning and/or HEPA-vacuuming as necessary and directed by the Owner's Representative to reclean the work areas. The above clearance testing shall then be repeated by the Environmental Consultant until clearance criteria are met. The Environmental Consultant's charges to the Owner for this additional cleaning, inspection and air testing services shall be borne by the Contractor.

I. After achieving the level of cleanliness and decontamination as specified herein and as confirmed by the final testing and checking, the Environmental Consultant shall thoroughly inspect the space jointly with the Contractor to determine whether any damage has been done to the finishes, equipment, or any other part of the workspace. A final inspection report shall be prepared jointly by the Owner's Representative and the Contractor detailing the list of items (punch list) to be fixed by the Contractor. Approval of final testing, checking, and ultimate completion shall be obtained from the Environmental Consultant.

3.14 RESPONSIBILITY FOR DAMAGES:

Any damage to the building structure, or other items designated to remain that have been the result of actions by the Contractor's personnel or equipment or subcontractors or to be salvaged shall be repaired to safe working condition without any cost to the Owner.

END OF SECTION 028210

SECTION 028240 - DISPOSAL OF ASBESTOS-CONTAINING WASTE MATERIALS

PART 1.0 GENERAL

1.1 ASBESTOS WASTE DISPOSAL PROCEDURES:

A. It is the responsibility of the Contractor to determine current waste handling, transportation, and disposal regulations for the work site and for each waste disposal landfill. The Contractor must comply fully with these regulations and all Department of Transportation and EPA requirements, and State and local regulations.

B. The Contractor shall document actual disposal of the asbestos waste at the designated landfill certified by the State of Louisiana Department of Environmental Quality to accept asbestos waste. The Contractor shall document disposal by completing a written Disposal Form (Asbestos Disposal Verification Form - ADVF, Waste Shipment Record) which then shall be signed by the landfill operator upon receipt of materials. The original completed documentation shall be forwarded to the Designer. Approval of Contractor payment requests may be denied until receipt of such Disposal Certificates.

C. Definition: Asbestos wastes are defined as all asbestos-containing or potentially asbestos-contaminated materials or other items which have not been cleaned completely to the satisfaction of the Environmental Consultant while inside the Work Area, and which must be removed from the job site. Asbestos waste may include building materials, insulation, disposable clothing and protective equipment, plastic sheeting and tape, contractor equipment, or other materials designated by State or local authorities or the Designer. <u>All materials, clothing, equipment, supplies, exhaust systems or vacuum filters, plastic sheeting and tape, and other materials designated by State or local authorities which potentially may be contaminated with asbestos, asbestos dust, or asbestos particulate must be disposed of as asbestos-containing or asbestos-contaminated wastes</u>.

D. Asbestos Waste Container Removal and Disposal Procedures:

1. The costs for waste packaging, transportation, and approved landfill disposal (plus all related record keeping) shall be borne by the Contractor.

2. The Contractor shall package, label, and remove all asbestos waste as specified in the above Sections. Packaging shall be accomplished in a manner that minimizes waste volume but ensures waste containers shall not tear or break.

3. <u>The Owner's Representative must observe removal of all waste containers</u> to verify their condition and certify the total volume of waste material (to the nearest cubic yard). He then shall insert the quantity on the Disposal Form/Waste Shipment Record and give the original of these forms to the

Contractor for transport to the landfill operator for signature.

1.2 WASTE REMOVAL SCHEDULING:

A. All waste containers shall be decontaminated and removed from the site before final cleanup is started and isolation barriers are removed. The Contractor must pre-schedule and obtain the approval of Owner for all time periods during which he desires to remove waste bags from the facility. Once a truckload of waste containers has accumulated, the Contractor shall arrange for transportation to the disposal site. Waste shall not be stored in the worker decontamination facility.

B. Asbestos Waste Transportation and Disposal Regulations: It is the responsibility of the Contractor to determine and ensure that he is complying with 1) the current waste handling regulations applicable to each work site; and 2) the current regulations for transporting and disposing waste at each ultimate disposal landfill. He must comply fully with these regulations, and with all U.S. Department of Transportation, State, and EPA requirements.

1. The Contractor (or his subcontractor) at no additional cost shall maintain a valid solid waste transportation registration issued by the Louisiana State Department of Transportation; and obtain, complete, and fully comply with any other local hazardous waste manifesting requirements. A copy of any manifest forms shall be sent to the Designer after disposal is completed and all required data and signatures have been inserted.

2. The Contractor shall provide a weight ticket to the Designer for each truckload of waste removed from the site.

3. Waste hauling transportation methods shall comply with the provisions of EPA Title 40, Part 61, Subpart M, Louisiana Administrative Code, Department of Transportation and with any hazardous waste regulations for temporary storage, transport, and disposal if such codes are enforced in states where the waste shall be stored, transported, or disposed of.

PART 2.0 PRODUCTS (NOT APPLICABLE)

PART 3.0 EXECUTION

3.1 ASBESTOS WASTE DISPOSAL:

A. Asbestos Waste Packaging: All asbestos waste material shall be promptly placed in 6-mil clear polyethylene bags or other suitable containers lined with 6-mil polyethylene sheeting as it is generated. A sufficient number of waste bags shall be located in the immediate work area, and in the Equipment Room of the Worker Decontamination Facility, The Contractor shall count or measure the volume of each filled container leaving the work area and maintain a written record of such.

B. Asbestos Waste Labeling: Warning labels shall have waterproof print and

permanent adhesive, in compliance with OSHA, EPA and DOT requirements, and shall be affixed to or printed on the sides of all waste bags or transfer containers. Warning labels shall be conspicuous and legible, and contain the following words:

DANGER
CONTAMINATED ASBESTOS FIBERS
AVOID CREATING DUST
CANCER AND LUNG DISEASE HAZARD

AND

RQ HAZARDOUS
SUBSTANCE
SOLID, NOS
ORM-E, NA 9188
(ASBESTOS)

In addition, the Contractor shall prepare and affix to each waste container the following label in accordance with the NESHAP regulation:

HAZARDOUS WASTE
FEDERAL LAW PROHIBITS IMPROPER DISPOSAL

IF FOUND, CONTACT THE NEAREST POLICE OR PUBLIC SAFETY AUTHORITY, OR THE U.S. ENVIRONMENTAL PROTECTION AGENCY

GENERATOR INFORMATION:

Generator's Name:	State of Louisiana, Division of Administration
Generator's Address:	William Pass Police Station and Warehouse Southern University, Baton Rouge, LA

C. Wetting of Asbestos Waste: A fine water spray shall be used to always keep the top layers of waste in containers thoroughly wet. When a waste container is full, it shall be securely sealed with tape or another secure fastener.

D. Asbestos Waste Container Decontamination and Removal Procedures: The following procedures shall be followed whenever containers or equipment are removed from the Work Area:

1. The Clean Room shall be considered a holding area only during the period of active waste transfer for the purpose of the loading of carts or drums. Storage of waste and carts (or drums) in the Clean Room is prohibited.

2. Waste removal shall not occur during worker shift changes or when workers are showering or changing. Care shall be taken to prevent short

circuiting and cycling of air outward through the Shower Room and Clean Room when used for waste removal.

3. Workers are to be stationed in each room/area of the Decontamination Facility to transfer the containers and equipment to or from adjacent sections. These workers shall not cross the airlocks into the adjacent areas/rooms until the waste or equipment transfer is finished for that period and the workers have gone through decontamination as required by these specifications. The workers in the Clean Room or holding area shall enter from uncontaminated areas with appropriate personal protective equipment; or, prior to the start of waste transfer, these workers shall exit the Work Area, fully decontaminated, and subsequently don clean personal protective equipment.

4. External surfaces of contaminated containers and equipment shall be cleaned by wet cleaning and/or HEPA vacuuming in the Work Area before moving such items into the Decontamination Facility airlock. Workers shall not enter the airlock during this procedure.

5. The containers of waste and the equipment shall be removed from the airlock by workers stationed in the Washroom during waste removal operations.

6. Once in the Washroom, external surfaces of contaminated containers and equipment shall be cleaned a second time by wet cleaning.

7. The cleaned containers of waste and equipment shall be placed in uncontaminated leak-tight plastic bags, lined fiber drums or other lined containers (or 6-mil polyethylene sheeting if physical characteristics are necessary and permit). Air volumes shall be minimized, and the containers shall be sealed. Items that may puncture or tear the plastic bags or sheeting shall be placed in a hardwall container, such as a drum, and then sealed.

8. The clean re-containerized items shall be moved into the air lock for subsequent transfer to the holding area. The Washroom workers shall not enter this airlock or the work area until waste removal is finished for the period.

9. Re-containerized items and cleaned equipment shall be removed from the airlock to the holding area by workers who have entered from uncontaminated areas with appropriate personal protective equipment.

10. The re-containerized items of waste and cleaned equipment shall be placed in open top, watertight plastic carts or drums. These carts or drums shall be held in the holding area pending removal. The carts or drums shall be HEPA-vacuumed or wet cleaned following the removal of the containers of waste from them.

11. The exit from the Decontamination Facility shall be monitored and always secured to prevent unauthorized entry.

12. The carts/drums may be temporarily stored in a holding area at the work site outside the work area until a transport vehicle arrives, but such storage areas must be pre-approved by the Owner.

E. Asbestos Waste Container Storage: Sealed labeled containers may be temporarily stored in the Work Area, or in a pre-designated and approved outside area, until a truckload quantity is obtained. The temporary storage area must be completely enclosed with wood or metal walls; floors and ceilings lined with 6-mil polyethylene sheeting and must always remain locked except during active loading or unloading. The temporary storage area shall be identified prominently and posted with warning signs.

3.2 WASTEWATER DISPOSAL PROCEDURES

A. All wastewater generated during the abatement work, including gross removal activities, final cleaning, and worker and equipment decontamination procedures must be completely collected by the Contractor and processed in accordance with all applicable Federal, State and local regulations, as well as with these specifications.

B. Wastewater shall be collected continuously during abatement activities. The storage container shall be connected to a filtering system consisting of no fewer than two (2) filters in a series leading to a 5.0-micron final filter and an adequately sized pump, prior to disposal in a sanitary sewer. In the absence of a sanitary sewer system, the wastewater shall be drummed and transported to an approved landfill in accordance with the requirements for disposal. The Contractor shall not allow storage on the existing floor system unless verified by a Structural Engineer.

C. Used water filters and other equipment and supplies used in the maintenance of the filtering system must be disposed of as asbestos-containing waste.

D. The costs for wastewater filtration, storage, discharge, packaging, labeling, transport, and approved disposal (plus all related record keeping) shall be borne by the Contractor.

END OF SECTION 028240

SECTION 028340 - REMOVAL AND DISPOSAL OF PCB-CONTAINING BALLASTS

PART 1.0 GENERAL

1.1 DESCRIPTION OF WORK:

A. The Contractor shall remove, package, transport, and dispose of all PCB-containing ballasts from fluorescent light fixtures located in the ceiling grid, in accordance with all Federal, State, and local rules and regulations. The Contractor is responsible for all the costs associated with the removal, packaging, transporting, and disposal of these ballasts.

B. The work, in general, includes, but is not limited to, the following:

1. Partial dismantling of light fixtures and separation of ballasts to permit removal.

2. Removal/Cleaning of any PCB containing oil from transformers, fixtures surfaces, and other building surfaces found to contain this oil in accordance with the requirement of this section. The contractor shall sample oil prior to its removal and proper disposal.

3. Providing and implementing spill prevention control and countermeasure plans.

4. Placement of all PCB contaminated items generated because of work activities into approved containers/drums.

5. Transportation of PCB's and PCB-contaminated items and containers to the disposal site.

6. Providing properly completed Waste Manifest/Waste Shipment Record Form.

7. Provide name and location of disposal site.

C. All PCB-related work activities to be accomplished under this section shall be coordinated closely with asbestos abatement work to minimize potential toxic exposure.

D. Prior to commencing this work, the Contractor shall inspect thoroughly the work area and prepare a construction schedule which lists anticipated time frames and sequence of operations for the various work activities. The construction schedule shall include activities such as contamination clean up and removal of all PCB-containing articles, items and containers from the work area. The construction schedule also shall include routing for all PCB-containing items to be removed from the work area and transported to disposal areas. Work activities,

sequence of work, and routing scheme shall be transmitted to the Designer prior to the commencement of any work under this section.

E. The Contractor shall furnish and maintain the electrical power and water to the site far the Contractors and Air Monitoring Firm's use and equipment.

1.2 APPLICABLE PUBLICATIONS:

A. The applicable sections, latest editions, and addenda of the following governmental regulations, codes, industry standards, and recommended practices form a part of these specifications. Nothing in these specifications is to be construed as permitting work not conforming to these requirements:

1. USEPA - United States Environmental Protection Agency

2. NEC - National Electrical Code

3. NEMA - National Electrical Manufacturers Association

4. RCRA - Resource Conservation and Recovery Act

5. TSCA - Toxic Substances and Control Act

6. DOT - Department of Transportation

7. Louisiana Department of Environmental Quality

8. OSHA - Occupational Safety and Health Administration

9. NFPA - National Fire Protection Association

10. All other applicable Federal, State, Parish and city codes, standards and regulations.

B. The Contractor is cautioned that he is responsible for ascertaining the extent to which these regulations affect the operations under these Contract Documents and to comply therewith.

1.3 DEFINITIONS: Refer to Section 014218 for terms and definitions used in these Contract Documents.

1.4 SUBMITTALS: Refer to Section 013323 for Contractor Submittal requirements.

1.5 RESPIRATORY AND PERSONNEL PROTECTION AND DECONTAMINATION: Refer to Sections 013529.13 and 013529.23 for Contractor respiratory and personnel protection and decontamination requirements. Respirators with particulate/organic filtration, non-absorbent suits, gloves, and boots shall be worn while removing and handling ballasts.

1.6 WASTE DISPOSAL: Disposal by the Contractor. Refer to Paragraph 3.6 of this Section for Contractor waste disposal requirements.

PART 2.0 PRODUCTS

2.1 GENERAL REQUIREMENTS:

A. The Contractor shall deliver all materials and equipment to the site in the original containers bearing the name of the manufacturer and details for proper storage and usage.

B. All materials or equipment delivered to the site shall be unloaded, temporarily stored outside of the building.

C. Unloading and temporary storage sites, and transfer routes, must be approved in advance by the Owner.

D. Damaged or deteriorated materials may not be used and must be promptly removed from the premises. Material which becomes contaminated with asbestos-containing material shall be packaged and legally disposed of in an approved landfill.

E. Techniques, procedures, and equipment required by these specifications may be covered by one or more U.S. and/or foreign patents. It is the sole responsibility of the Contractor to determine what, if any, patents are applicable and to meet the requirements of the patent owner, including fees regarding the use of these patents.

2.2 MATERIALS, TOOLS, AND EQUIPMENT:

A. All materials, tools, and equipment must comply, at a minimum, with this specification, and relevant Federal, State, and local codes. For the construction of containment barriers, work platforms, and decontamination facilities, all lumber and plywood shall be fire retardant. Flame-resistant polyethylene film shall conform to requirements set forth in the National Fire Protection Association, shall be fire-retardant, and shall bear manufacturer's stamp of Underwriters Laboratory Classification.

PART 3.0 EXECUTION

3.1 GENERAL: The requirements and sequences described herein are parameters for execution of the abatement work and do not include necessarily all abatement requirements. The Contractor will be responsible for all items that may be necessary to complete the abatement work in accordance with the Contract Documents Work Plan, and all applicable regulations.

3.2 PCB-BALLAST REMOVAL:

A. The Contractor shall remove the ballasts from the fluorescent fixtures in a well-ventilated Work Area. The ballasts shall be removed from the fixtures and placed in layers. A layer of absorbent material more than the contained liquid shall be placed between each layer of ballast.

B. Once all of the ballast has been placed in the approved drums, the drum exteriors shall be decontaminated as necessary and placed in a lockable storage container.

C. The Contractor shall arrange for transportation to the disposal site in accordance with all Federal, State, and local rules and regulations.

3.3 SPILL CLEAN-UP, CONTAINERIZATION AND MARKING:

A. Equipment and Tools: After the last ballast has been separated from the electrical fixture, all tools and equipment used in the work shall be decontaminated and properly stored. Where work surfaces have contacted PCB fluids, they shall be scraped clean, flushed with solvent, wiped clean, and all debris placed in approved drums and disposed of in an EPA-approved incinerator. All tools that may have come in contact with PCBs at any concentration shall be thoroughly cleaned.

B. PCB Articles (Electrical Equipment): All exterior surfaces of electrical equipment to be removed that may have come in contact with PCB's or contaminated oils or fluids, either during work activities or due to past leaks, shall be cleaned thoroughly and wiped clean.

C. Slabs, Floors, and Walls: All concrete (or other surfaces) which have come in contact with PCB's or PCB mixtures in the course of the work because of past leaks shall be cleaned thoroughly using a combination of sorbents, solvents, and cleaners.

3.4 CONTAINERIZATION AND MARKING:

A. All liquids generated because of work activities and clean-up operations shall be placed in closed top drums and sealed with a steel ring band with bolt compression device. All solids, such as sorbents, rags, disposable protective clothing, and other incidentals, shall be placed in closed top drums and sealed with a steel ring band with bolt compression device.

B. All drums and PCB article containers (where used) shall be permanently marked as to specific contents and dated in accordance with Federal, State and local rules and regulations. In addition, each drum (and container) shall be sealed with a steel ring band with bolt compression device.

3.5 PCB RELEASE LIMITS: If a PCB spill occurs, the Contractor shall implement the emergency spill plan procedures.

A. The Contractor shall limit the airborne PCB concentration to below one (1) microgram per cubic meter of air (1 ug/m^3) or the background level before the start of the project, whichever is lower.

B. The Contractor shall limit the PCB concentration of building surfaces to below 10 micrograms per 100 square centimeters, (10ug/100cm^2).

C. If required, air monitoring data shall include the sorbent type, sampling rate, sampling volume, analytical method, mass of PCB's detected, and limit of detection, as per NIOSH analytical methods. Surface monitoring shall include the filter type, sorbent type, sampling, location area sampled, analytical method, mass of PCB's detected and the limit of detection, as per NIOSH analytical Method 5503. Analytical results for PCB analysis shall be provided to the Designer within 24 hours of the end of work on any weekend or within 24 hours of the removal of the ballasts.

3.6 HANDLING AND TRANSPORTATION TO OFF-SITE DISPOSAL FACILITIES:

A. Handling of Drums: All closed top drums must be sealed and marked prior to loading on the transport vehicle. Filled drums shall be loaded on the transport vehicle by any of the following methods:

1. By a hoist or lift truck utilizing a two-point drum lift.

2. By a lift truck lifting the drums from underneath by a pallet attached to the drum by a banding arrangement.

B. Drums shall not be lifted by any rope, chain or cloth slings tied about the drum, placement of drums on bare-lift truck forks, forcing drums between forks of a lift truck, or any commercial drum lift exerting force on the sides of a drum.

C. All drums or PCB article containers shall be secured to the transport vehicle to prevent movement in transit.

D. All PCB articles such as ballasts, and all drums containing liquids, solids and incidentals shall be disposed of in accordance with Federal and State Regulation.

E. The Contractor shall utilize a Waste Hauler Contractor licensed for the transportation and hauling of PCB hazardous wastes. The firm shall provide a routing plan which clearly identifies the routes he proposes to follow while transporting PCB items from the various work areas (points of generation) to the disposal site. A minimum of two operators shall attend all times when PCB items are being loaded and unloaded.

F. Vehicles used for transporting PCB items must be marked plainly and visibly in accordance with Federal, State and local rules and regulations.

G. Unloading, Records, and Placement in Storage: Transport vehicles shall be unloaded utilizing the same equipment and methods for loading. Immediately following unloading of the PCB transport vehicle, the cargo area shall be inspected to check for any fluid leaks. If any fluid leaks are found, the source of the leaking drum or item shall be identified and sealed. The contaminated cargo area shall be thoroughly cleaned. Cleaning solvents and solids shall be placed in proper drums.

H. Upon completion of all PCB work-related activities, the Contractor shall provide a complete record of such activities and incinerator data to the Designer. The record shall include but not be limited to:

1. Name of the Contractor performing the work outlined in this Section and the technician-in-charge.

2. Ballasts and Electrical Equipment removed:

a. Manufacturer, serial number, and date of Manufacture.

b. Date removed from service and location.

c. Date of incineration.

d. Weight in pounds.

3. Drums and PCB article containers (where applicable):

a. Drum size (30 or 55 gallons).

b. Identification of contents, i.e., ballast, cleaning solvents, etc., for solids, rags, sorbents, etc.

c. Weight in kilograms of contents of each drum (or container).

d. Date items were destroyed and location and company.

4. Hazardous Waste Manifests/Waste Shipment Record Form and Chain-of-Custody Forms shall be provided for all hazardous waste materials, and hazardous waste manifests shall be presented to the Designer with the Close Out Documents.

3.7 SAFETY PROCEDURES AND WORKER PROTECTION:

A. All required precautions and measures shall be taken to protect employees, related trade employees, inspection personnel, and the public from exposure to PCB solids, liquids, and vapors.

B. All electrical equipment upon which PCB-related activities are to be performed shall be disconnected permanently from any power source prior to commencing of any work.

C. Work Area Protection and Marking: Prior to commencing any PCB-related work activities, barricades and warning signs shall be provided to identify clearly and guard effectively against unauthorized entry into the work area.

D. All equipment shall be confined to the work area until the work is complete, and containers are sealed, and equipment properly and safely stored for transport.

1. Barricades: If approved asbestos-related temporary enclosures are in use, no additional PCB-related temporary enclosures need to be constructed, except as needed in case of PCB-related emergency,

2. Signs: During the PCB work phase, the Contractor shall place warning signs at intervals of approximately ten feet. The warning signs for work areas shall be approximately one foot six inches square with a yellow background and one-inch black letters. Signs shall read: "DANGER - KEEP OUT - TOXIC CHEMICAL WORK AREA."

E. Protective measures shall be provided in connection with the transport of PCB materials within the building over for the entire pathway to the exterior elevators to the transporting vehicle.

F. Protective Clothing and Equipment: always when PCB materials in any volume are not sealed in drums, containers, or electrical equipment, workers shall wear:

1. Disposable, nonporous gloves.

2. Disposable whole-body clothing impermeable to PCBs.

3. Respiratory protection (NIOSH/MSHA-approved) against organic vapors and particulates (at least the level of particulate protection required at that stage of work for asbestos protection).

4. Eye protection.

5. Hard hats.

G. The Contractor shall provide protective clothing, eye protection, and respiratory protection as required for inspection personnel monitoring work activities within the work area.

H. Personnel Protection and Procedures: The PCB work area shall at no time be left unattended after procedures have begun and until all ballasts and incidentals have been sealed in approved, properly labeled containers. If immediate transportation to the PCB incineration facility is not feasible, the Work Area must

be secured in a manner in accordance with Federal, State and local rules and regulations. During procedures and always when PCB ballasts or mixtures in any volume are not sealed in drums, containers, or electrical equipment, all personnel entering the work area must don protective clothing and equipment as listed herein. Upon exiting the work area, all disposable protective clothing shall be placed in approved drums, sealed, and disposed of as specified herein.

I. Workers with cuts or scratches shall protect these wounds before entering the work area. Similarly, workers who accidentally incur minor cuts or scratches in the course of work activities shall leave the work area, cleanse the wound with medical grade soap, and seal the wound before returning to the work area.

J. The Contractor shall develop a sequenced plan for the completion of all PCB related work and submit this plan in advance of such work to the following Designer. The plan shall address the following items:

1. Lists of vehicles, equipment, and personnel to be used in accomplishing the work.

2. The emergency spill plan, which shall encompass all steps the Contractor will take in the event of a spill or other emergency.

3. Safety procedures, which shall cover all phases of operations, including but not limited to, handling, loading, transporting, securing PCB loads, and first aid procedures.

END OF SECTION 028340

SECTION 028500 - REMOVAL AND DISPOSAL OF MERCURY CONTAINING FLUORESCENT LIGHT TUBES

PART 1.0 GENERAL

1.1 DESCRIPTION OF WORK:

A. The Contractor shall remove, package, transport, and dispose of the mercury vapor-containing fluorescent light tubes (lamps) from fluorescent light fixtures and mercury containing Thermostats and Switches throughout the building, in accordance with all Federal, State, and local rules and regulations. The Contractor is responsible for all the costs associated with the removal, packaging, and transportation and disposal.

B. The work, in general, includes, but is not limited to, the following:

1. Partial dismantling of thermostats, switches and light fixtures and separation of lamps to permit removal.

2. Cleaning of any Mercury, PCB or asbestos contamination on fixtures surfaces.

3. Providing and implementing spill prevention control and countermeasure plans.

4. Placement of the light tubes generated because of work activities, into approved containers/drums.

5. Transportation of the light tubes to the off-site recycling facility.

6. Provide properly completed Waste Manifest Form/Waste Shipment Record.

7. Provide name and location of recycling facility (or disposal facility) licensed to accept this waste.

C. All work activities to be accomplished under this section shall be closely coordinated with asbestos abatement work to minimize potential toxic exposure.

D. Prior to commencing this work, thoroughly inspect the Work Area and prepare a construction schedule, which lists anticipated time frames and sequence of operations for the various work activities. The construction schedule shall include activities such as contamination clean up, and removal of fluorescent lamps from the work area. The construction schedule shall also include routing for items to be removed from the Work Area and transported to the temporary storage area. Work activities, sequence of work, and routing scheme shall be transmitted to the Designer prior to the commencement of any work under this section.

1.2 APPLICABLE PUBLICATIONS:

Governmentlicable sections, latest editions and addenda of the following government regulations, codes, industry standards and recommended practices, form a part of these specifications. Nothing in these specifications is to be construed as permitting work not conforming to these requirements:

1. USEPA - United States Environmental Protection Agency
2. NEC - National Electrical Code
3. NEMA - National Electrical Manufacturers Association
4. RCRA - Resource Conservation and Recovery Act
5. TSCA - Toxic Substances and Control Act
6. DOT - Department of Transportation
7. Louisiana Department of Environmental Quality
8. OSHA - Occupational Safety and Health Administration
9. NFPA - National Fire Protection Association
10. All other applicable Federal, State, Country and city codes, standards and regulations.

The Contractor is cautioned that he is responsible for ascertaining the extent to which these regulations affect the operations under these Contract Documents and to comply therewith.

1.3 DEFINITIONS:

A. Refer to Sections 011100 and 028210 for terms and definitions used in these Contract Documents

1.4 SUBMITTALS:

A. Refer to Sections 011100 and 028210 for Contractor Submittal requirements.

1.5 RESPIRATORY AND PERSONNEL PROTECTION AND DECONTAMINATION:

A. Refer to Sections 011100 and 028210 for Contractor respiratory and personnel protection and decontamination requirements.

1.6 WASTE DISPOSAL:

A. Refer to Paragraph 3.5 of this Section for Contractor waste disposal requirements.

PART 2.0 PRODUCTS

2.1 GENERAL REQUIREMENTS:

A. The Contractor shall deliver all materials and equipment to the site in the original containers bearing the name of the manufacturer, and details for proper storage and usage.

B. All materials or equipment delivered to the site shall be unloaded, temporarily stored, and transferred to the Work Area in a manner which shall not interfere with the operations of the building occupants.

C. Unloading and temporary storage sites, and transfer routes, must be approved in advance by the Owner.

D. Damaged or deteriorated materials may not be used and must be promptly removed from the premises. Material which becomes contaminated with PCB's shall be packaged as PCB-containing and transported to the temporary storage area.

E. Techniques, procedures, and equipment required by these specifications may be covered by one or more U.S. and/or foreign patents. It is the sole responsibility of the Contractor to determine what, if any, patents are applicable and to meet the requirements of the patent owner including fees regarding the use of these patents.

2.2 MATERIALS, TOOLS, AND EQUIPMENT:

A. All materials, tools, and equipment must comply at a minimum with this specification, and relevant Federal, State, and local codes. For the construction of containment barriers, work platforms, and Decontamination Facilities, all lumber and plywood shall be fire retardant. Flame resistant polyethylene film shall conform to requirements set forth in the National Fire Protection Association, shall be fire retardant, and shall bear manufacturer's stamp of UL Classification.

PART 3.0 - EXECUTION

3.1 GENERAL:

A. The requirements and sequences described herein are execution parameters for the removal work and do not include necessarily all removal requirements. The Contractor will be responsible for all items that may be necessary to complete the removal work in accordance with the Work Plan, Scope of Work, and all applicable regulations.

3.2 SPENT FLUORESCENT LAMP REMOVAL:

A. The Contractor shall remove the lamps from the fluorescent fixtures in a well-ventilated Work Area. The lamps shall be removed from the fixtures and placed in approved containers or barrels. Containers shall be constructed in a manner that will permit the transportation of the lamps without breakage.

B. Once all the lamps have been placed in the approved containers, the containers shall be decontaminated as necessary and placed in a lockable storage container.

C. The Contractor shall arrange for transportation to the disposal site.

3.3 SPILL CLEAN-UP, CONTAINERIZATION AND MARKING:

A. Clean up of Work Area:

1. Equipment and Tools: After the last lamp has been separated from the electrical fixture, all tools and equipment used in the work shall be decontaminated and properly stored. Where work surfaces have contacted PCB fluids, they shall be scraped clean, flushed with solvent, wiped clean and all debris placed in approved containers and transported to the temporary storage area.

3.4 CONTAINERIZATION AND MARKING:

A. All lamps generated because of work activities and clean-up operations shall be placed in the approved containers and placed in a lockable storage container to be transported to disposal facility.

B. All containers shall be permanently marked as to specific contents and dated in accordance with Federal, State and local rules and regulations.

3.5 HANDLING AND TRANSPORTATION TO DISPOSAL SITE:

A. Handling of Containers: All containers shall be sealed and marked prior to loading on the transport vehicle. Containers shall be loaded on the transport vehicle by any of the following methods:

1. By hoist or lift truck utilizing a two-point drum lift.

2. By a lift truck lifting the drums from underneath by a pallet attached to the drum by a banding arrangement.

B. Containers shall not be lifted by: Any rope, chain or cloth slings tied about the container, placement of containers on bare-lift truck forks, forcing containers between forks of a lift truck, or any commercial container lift exerting force on the sides of a container.

C. All containers shall be secured to the transport vehicle to prevent movement in

transit.

D. All lamps shall be transported to the disposal facility.

E. The Contractor shall utilize a waste hauler licensed for the transportation and hauling of hazardous wastes. The Contractor shall provide a routing plan, which clearly identifies the routes proposed to follow from the Work Area (points of generation) to the Owner's off-site temporary storage area. A minimum of two operators shall attend all times when items are being loaded and unloaded.

F. Vehicles used for transporting lamps must be plainly and visibly marked in accordance with Federal, State and local rules and regulations.

G. Unloading, Records, and Placement in Storage: Transport vehicles shall be unloaded utilizing the same equipment and methods for loading.

H. Upon completion of all work-related activities, the Contractor shall provide a complete record of such activities to the Designer. The record shall include but not be limited to:

1. Name of the Contractor performing the work outlined in this Section and technician in charge.

2. Lamps removed:

a. Date removed from service and location
b. Number of lamps

3. Containers:

a. Container size and type.

b. Identification of contents.

c. Weigh in kilograms of contents of the container and number of containers.

d. Date items were transported to disposal facility.

4. Completed Waste Manifest Form/Waste Shipment Records and Chain-of-Custody Forms shall be presented to the Owner's Representative within three days from the time the lamps are transported to the disposal site.

3.6 SAFETY PROCEDURES AND WORKER PROTECTION:

A. Take all precautions and measures required to protect employees, related trade employees, inspection personnel, and the public from exposure to mercury vapor and glass.

B. All electrical equipment upon which related activities are to be performed shall be permanently disconnected from any power source prior to commencing any work.

C. Work Area Protection and Marking: Prior to commencing any work activities, provide barricades and warning signs to clearly identify and effectively guard against unauthorized entry into the Work Area.

D. All equipment shall be confined to the Work Area until the work is complete and containers are sealed, and equipment properly and safely stored for transport.

1. Barricades: If approved asbestos-related temporary enclosures are in use, no additional enclosures need to be constructed.

2. Signs: During this work phase, the Contractor shall place warning signs at intervals of approximately ten feet. The warning signs for Work Areas shall be approximately one foot six inches square with a yellow background and one-inch black letters. Signs shall read: "DANGER - KEEP OUT - TOXIC CHEMICAL WORK AREA. "If approved asbestos-related temporary enclosures are in use, no additional signs are needed.

E. Protective measures shall be provided for the transporting of materials within the building for the entire pathway to the exterior elevators to transport vehicle.

F. Protective Clothing and Equipment: When handling fixtures and lamps:

1. Disposable, nonporous gloves

2. Disposable whole-body clothing impermeable to Mercury and PCB-Containing Oil.

3. Respiratory protection (NIOSH/MSHA approved) against organic vapors and particulates (at least the level of particulate protection required at that stage of work for asbestos protection).

4. Eye protection

5. Hard Hats

G. The Contractor shall provide protective clothing, eye protection, and respiratory protection as required for Inspection Personnel monitoring work activities within the work area.

H. Personnel Protection and Procedures: The Work Area shall at no time be left unattended after procedures have begun and until all lamps and incidentals have been placed in the properly labeled containers. If immediate

transportation to the Owner's temporary storage area is not feasible, the Work Area must be secured in a manner in accordance with Federal, State and local rules and regulations. All personnel entering the Work Area must don protective clothing and equipment listed herein. Upon exiting the Work Area, all disposable protective clothing shall be placed in approved drums, sealed, and disposed of as specified herein.

I. Workers with cuts or scratches shall protect these wounds before entering the work area. Similarly, workers who accidentally incur minor cuts or scratches in the course of work activities shall leave the Work Area, cleanse the wound with medical grade soap and seal the wound before returning to the Work Area.

J. The Contractor shall develop a sequenced plan for the completion of this work and submit this plan of such work to the Designer. The plan shall address the following items:

1. Lists of vehicles, equipment, and personnel to be used in accomplishing the work.

2. Handling procedures and type of containers to be used.

3. Safety procedures cover all phases of operations including, but not limited to, handling, loading, transporting, disposal, securing loads and first aid procedures.

END OF SECTION 028500

SECTION 03 04 00 – CUSTOM PRECAST CONCRETE

PART 1 - GENERAL

1.1 RELATED DOCUMENTSs

A. Drawings and general provisions of the Contract, including General and Supplementary Conditions and other Division 01 Specification Sections, apply to this Section.

1.2 SUMMARY

A. Perform all work required to furnish and complete the proper installation of precast concrete.

B. Precast Concrete components:
   1. Precast Concrete Retaining / Seat Walls shown on Landscape Drawings

C. Setting material, grouts, sealants and caulks

D. Installation of precast concrete

E. Related work not specified under this section
   1. Installation of steel units to receive precast concrete
   2. Installation of concrete substrate to receive precast components

1.3 REFERENCES

A. American Society for Testing and Materials (ASTM)
   1. ASTM C-150
   2. ASTM C-128
   3. ASTM C-260
   4. ASTM C-31
   5. ASTM C-494
   6. ASTM C-39

B. Precast Concrete Institute (PCI)

1.4 SUBMITTALS

A. Shop Drawings
   1. Submit fabrication drawings of all precast concrete items showing detailed sections and profile for all precast items. Details shall show all reinforcing and cast in hardware.

B. Samples
   1. Submit 1 sample for color and texture approval.
      a. Color to be selected from manufacturer's standard offerings.
      b. Match existing or architect’s sample
      c. Custom Sample Number

C. Submit a copy of manufacturer's Quality Assurance and Procedure Manual

D. Performance Requirements
   1. Compressive Strength 5,000 p.s.i. minimum
   2. Air Content 6-8%
   3. Water-Cement Ration .45
   4. Deflection Max: L/720

E. Test Results
   1. Manufacturer shall furnish test results attesting that materials meet specification requirements.

1.5 QUALITY ASSURANCE

A. Qualifications: Precast Concrete Manufacturer and Trade Contractor must have a minimum of 5 years of successful experience on projects of similar magnitude and complexity to the indicated project.

B. Manufacturer and contractor to be prequalified by Architect prior to bidding and failure to do so will void bid.

1.6 DELIVERY, STORAGE, AND HANDLING

A. Packaging and Shipping: precast concrete to be palletized, shrink wrapped and marked with legible manufacturer identification, including piece number and quantities.
B. Storage and Protection precast concrete to be stored in secure area in original packaging.
C. Protect from damage by other trades.
D. Report all damage due to shipment immediately. Customer is required to sign the Bill of Lading slip detailing the damaged product. Picture proof is required.

1.7 WARRANTY

A. For a period of two (2) years from delivery of precast concrete, manufacturer warrants the precast concrete products against defects in workmanship and materials per industry standards. This warranty does not cover the above products for cracking and faulting caused by settling due to improper or faulty substrates or improper installation; nor does it cover damage caused by impact, vandalism or natural disaster.

PART 2 - PRODUCTS

2.1 MANUFACTURERS

A. Architectural PreCast
   1. Gary Whitehead
      2187 Beaumont Drive
      Baton Rouge, LA 70806
      225-229-7669
      www.batonrougeprecast.com
B. Atelier Vals
   1. Todd Hart
      4500 Bowling Blvd, Ste 100
      Louisville, KY 40207
      502-498-0840
      www.ateliervals.design
C. Wausau Tile, Inc
   1. Kelly Coleman
      601-941-5983
      www.wasautile.com

2.2 MATERIAL REQUIREMENTS

A. Portland Cement: ASTM C-150 Specifications for Portland Cement.
B. Aggregates: Aggregate shall be blended to meet individual project requirements.
C. Coloring; Pigments used shall be inorganic, resistant to alkalinity and used per manufacturer's recommendations.
D. Reinforcement and Hardware:
   1. Reinforce precast with deformed rods as recommended by precast concrete manufacturer.
E. Abrasive Inserts: Shall consist of silica sand and epoxy.
   1. Abrasive Color:
   2. Specify one to three lines.
F. Setting Materials, Caulks & Sealants
   1. Color(s) to be selected by Architect.
   2. Sealer: Colorless, pure acrylic water repellent sealer. Sealer to maintain natural look of concrete surface with no glaze or gloss, darkening or color change.
   3. Precast manufacturer is not a reseller for any of the above products. Please contact the following supplier for information and recommendations on job specific installation materials:

a. Acceptable Supplier:
Custom Building Products/Aqua Mix, 800-272-878
E-mail: info@cbpmail.net Website: www.custombuildingproducts.com

2.3 MANUFACTURED UNITS

A. Sizing Tolerances
1. All units to conform to shop drawings with a (+/-) 1/8" tolerance in dimension.

B. Precast Surfaces and Edges:
1. All exposed edges to have minimum of 1/8" radius to prevent chipping.
2. All finished surfaces to match approved control sample.
3. All precast concrete finished surfaces to be factory sealed.

PART 3 - EXECUTION

3.1 INSPECTION

A. Examine substrates for the following:
1. Defects or cracks in existing work or substrate.
2. Deviations beyond allowable tolerances for the substrate.

B. Continue with installation of precast units only when all defects have been corrected.

3.2 PROJECT CONDITIONS

A. Do not install products under environmental conditions outside setting material manufacturer's absolute limits.

3.3 INSTALLATION

A. Joints
1. Joints between adjacent precast should be a minimum of 1/8”-1/4”.
2. Provide foam backer rods of appropriate size to assist in joint caulking.

B. Caulking of Precast
1. Clean all joints thoroughly, removing all debris.
2. Wipe all joints with caulk manufacturer's recommended cleaner prior to application.
3. Use urethane caulk. (Color match caulk to precast per architect selection.)
4. Clean up after caulking as per caulk manufacturer's recommendations.

C. Precast Concrete products setting or installation methods are to be reviewed by the manufacturer and setting materials supplier.

D. Final Cleaning of Precast Concrete
1. Check all surfaces and caulking, make repairs as necessary.
2. Clean treads with a pH balanced soap.

E. Protection:
1. Upon completion, the work shall be ready for final inspection and acceptance by owner or owner’s agent.
2. General Contractor shall protect the finished work from the time the installing contractor completes the work.

F. Finish:
1. Overall match to approved sample and per industry standards.
2. All products to be factory sealed.

3.4 CARE AND MAINTENANCE

A. Cleaning

1. To preserve the appearance and extend the life of the Precast Concrete cleaning and maintenance processes must be in place. When using the following procedures, please follow the product manufacturer's instructions regarding the use of any equipment or cleaning materials described here.
   a. Power sweep, then pressure wash precast surface. Spot clean any stained areas.
   b. Spot clean any stained areas by using a neutral, non-aggressive cleaner. This may require effort to remove some of the tougher marks or stains.
      1) Example of off-the-shelf cleaners: Citrus cleaner, Simple Green
   c. Always start with the most neutral cleaner and work your way toward the more aggressive cleaners.
   d. In extreme cases, contact Wausau Tile to discuss options
   e. Be sure to use plastic, rubber or nylon tip equipment; this will help prevent scratches on the concrete.
2. Precast Concrete is built to withstand aggressive cleaning; however, the more aggressive the cleaner, the more risk is involved. Strict adherence to all product warnings is suggested.
3. In all cases after cleaning and/or patching, it is recommended that the Precast be sealed. This will help protect the product from environmental effects. Contact manufacturer to obtain sealer and stain information based on specific job.

B. Maintenance
1. Annual maintenance is recommended; however, incases of extreme use, the best time for application is when the appearance of the product is showing wear or is appearing dull.
2. Check the precast for broken and chipped pieces. If damaged, contact manufacturer before repairing to order a patch kit and obtain patching procedures.
3. De-icing salts can damage concrete, causing them to scale or break apart. If necessary, these chemicals should be used sparingly and with caution on our concrete products.
   a. Salt based products are not recommended
4. De-icers should be used only when necessary to help loosen snow and ice, and make removal easier. Never over-apply de-icing products. Mix the de-icers with sand to increase their effectiveness and reduce overall use.
   a. Always read and follow label directions when applying de-icing materials.
   b. Calcium magnesium acetate chloride tends to cause the least amount of damage to Precast Concrete
5. Other manufacturer’s products used in conjunction with the Precast Concrete may require additional maintenance. Including but not limited to: Wood, Metals, Plastics, etc. Contact product specific manufacturers for their maintenance requirements.

END OF SECTION 03

SECTION 03 10 00 – CONCRETE FORMWORK - SITE CONCRETE

PART 1 - GENERAL

1.1 RELATED DOCUMENTS

A. Drawings and general provisions of the Contract, including General and Supplementary Conditions and Division 01 Specification Sections, apply to this Section.

1.2 SUMMARY

A. Section includes furnishing and installing formwork for cast-in-place concrete, with shoring, bracing, anchorage and all necessary accessories. Openings in the formwork for other work shall be provided. All stripping activities shall be included under this section.

B. Related Requirements
   1. Section 032000 - Concrete Reinforcement.
   2. Section 033000 - Cast-In-Place Concrete.

1.3 REFERENCES

A. ACI 347-78 - Recommended Practice for Concrete Formwork.

B. ACI 301-84 - Specifications for Structural Concrete for Building (Revised 1988).

C. PS-1 - Construction and Industrial Plywood.

D. ACI 318-95/318R-95 - Building Code Requirements for Reinforced Concrete.

1.4 DESIGN REQUIREMENTS

A. CONTRACTOR shall be responsible for the design, engineering and construction of formwork, shoring and bracing to conform to design and code requirements; resultant concrete to conform to required shape, line and dimension. Design and construction of formwork shall take into account live loads, dead loads, weight of moving equipment operating on formwork, concrete mix, height of concrete drop, vibrator frequency, temperature, foundation pressures, stresses, lateral stability, and other factors pertinent to the safety of personnel and structures. CONTRACTOR shall provide shores, struts, and trussed supports as necessary.

1.5 QUALITY ASSURANCE

A. Work shall be performed in accordance with the standards referenced in Part 1.3 of this specification.

1.6 REGULATORY REQUIREMENTS

A. Conform to applicable codes for design, fabrication, erection and removal of formwork.

1.7 COORDINATION

A. Coordinate this section with other sections of the Work which require attachment of components to formwork. If formwork is placed after reinforcement, resulting in insufficient concrete cover over reinforcement, replace formwork or reset reinforcing to provide minimum specified concrete cover.

PART 2 - PRODUCTS

2.1 FORM MATERIALS

A. Forms for exposed vertical faces less than 30" in height: Form-facing panels that will provide continuous, true, and smooth concrete surfaces. Furnish in largest practicable sizes to minimize joints
   1. Coated plywood consisting of a plywood panel core that is pre-coated with a smooth phenolic film or smooth fiberglass surface on one side.
      a. Coated plywood forms may be reused as long as no surface damage is present. If surface damage is present, including cuts, chips, or any other inconsistency compromising the contiguous smooth surface, the form shall be discarded and replaced.

B. Forms for exposed vertical faces greater than 30" in height:
   1. Preformed Steel Forms: Minimum 16-gauge (1.5 mm) matched, tight fitting, stiffened to support weight of concrete without deflection detrimental to tolerances and appearance of finished surfaces.
   2. Glass Fiber Fabric Reinforced Plastic Forms: Matched, tight fitting, stiffened to support weight of concrete without deflection detrimental to tolerances and appearance of finished concrete surfaces.

C. Forms for paving, sidewalks, and other horizontal concrete applications
   1. See Section 321313 – Concrete Paving.

2.2 FORMWORK ACCESSORIES

A. Form Ties:
   1. Metal form ties shall be removable or snap-off type, galvanized metal, fixed or adjustable length cone type with waterproof washer (for water bearing structure or basement), shall be used to hold forms in place. Such ties shall have provision to permit ease of removal of the metal as hereinafter specified. The use of wire form ties will not be permitted. All metal appliances used inside of the forms to hold them in correct alignment shall be removed to a depth of at least 1/2-inch from the surface of the concrete and shall be so constructed that metal may be removed without undue injury to the surface from chipping or spalling. Such devices, when removed, shall leave a smooth opening in the concrete surface not larger than 7/8-inch in diameter. Burning off of rods, bolts, or ties will not be permitted. Metal ties shall be held in place by devices attached to wales. Each device shall be capable of developing the strength of the tie. Metal and wooden spreaders which are separate from the forms shall be wired to the top of form and shall be entirely removed as the concrete is being placed. The use of metal form ties of a type that are encased in paper or other material to allow the removal of complete tie, leaving a hole through the concrete structure, will not be permitted in the construction of basement or water bearing walls. After the tie rods are broken back or removed, the holes shall be thoroughly cleaned to remove all grease and loose particles; then the mortar (non-shrink cement-sand mortar, as dry as practicable) shall be carefully placed into the holes in small quantities. After the holes are completely filled, all excess mortar shall be struck off flush and the surface finished in such a manner as to render the filled hole as inconspicuous as possible. If these patches appear to be darker than the other surface of the concrete, white cement shall be used in the mortar as required.
   2. "Supertie" fiberglass form tie system as manufactured by RJD Industries, Inc., 26945 Cabot Road, Suite 107, Leguna Hill, California, 800/344-4753. Provide spreader rod, ties, gripper and all necessary accessories and installation devices. Provide gray color rod. Install Supertie in accordance with supplier's instructions. After removal of forms, grind Supertie flush to wall.

B. Form Release Agent: Commercially formulated form-release agent that will not bond with, stain, or adversely affect concrete surfaces and will not impair subsequent treatments of concrete surfaces.

C. Corners: Chamfered, rigid plastic or wood strip type; 3/4-inch by 3/4-inch size; maximum possible lengths. Accurately formed to produce uniformly straight lines and tight edge joints.

D. Nails, Spikes, Lag bolts, Through bolts, Anchorages: Sized as required, of sufficient strength and character to maintain formwork in place while placing concrete.

E. Waterstops:
   1. Resilient Type - Polyvinyl chloride, minimum 2,000 psi tensile strength, minimum 50°F (15°C) working temperature range, 9-inch wide for construction joints, 9inch wide for expansion joints, maximum possible lengths, ribbed profile, preformed corner sections, heat welded jointing; "Wire Stop" as manufactured by Paul Murphy Plastic Co. or approved equivalent.
   2. Soft Type - Blend of refined hydrocarbons, resins, plasticizing compounds and mineral fillers extruded in a 5/8-inch by 1-1/2-inch ribbon, which is a soft, pliable adhesive. Compound does not cure, oxidize or evaporate. Waterstop shall be: As manufactured by Synko-flex, 2100 Travis, Houston, Texas 77002,

713/686-8203; Swellseal Plus as manufactured by de neef America, Inc., 122 North Mill Street, St. Louis, Missouri 48880, 517/681-5791; or approved equal.

PART 3 - EXECUTION

3.1 EXAMINATION

A. Verify lines, levels and centers before proceeding with formwork. Ensure that dimensions agree with Plans.

3.2 EARTH FORMS

A. Earth forms shall not be used without specific, written approval from ENGINEER. Hand trim sides and bottom of earth forms. Remove loose soil prior to placing concrete.

3.3 ERECTION - FORMWORK

A. Erect formwork, shoring and bracing to achieve design requirements, in accordance with the requirements of ACI 301.

B. Provide bracing to ensure stability of formwork. Shore or strengthen formwork subject to overstressing by construction loads.

C. Arrange and assemble formwork to permit dismantling and stripping. Do not damage concrete during stripping. Permit removal of remaining principal shores.

D. Align joints and make watertight. Keep form joints to a minimum.

E. Obtain approval from ENGINEER before framing openings in structural members which are not indicated on Plans.

F. Provide chamfer strips on external corners of beams, joists, columns, elevated slabs and walls.

3.4 APPLICATION - FORM RELEASE AGENT

A. Apply form release agent on formwork in accordance with manufacturer's recommendations.

B. Apply prior to placement of reinforcing steel, anchoring devices, and embedded items.

C. Do not apply form release agent where concrete surfaces will receive special finishes or applied coverings which are effected by agent. Soak inside surfaces of untreated forms with clean water. Keep surfaces coated prior to placement of concrete.

3.5 INSERTS AND EMBEDDED PARTS

A. Provide form openings where required for items to be embedded in or passing through concrete work. Locate and set in place items which will be cast directly into concrete.

3.6 FORM CLEANING

A. Clean and remove foreign matter within forms as erection proceeds.

B. Clean formed cavities of debris prior to placing concrete.

C. Flush with water or use compressed air to remove remaining foreign matter. Ensure that water and debris drain to exterior through clean-out ports.

D. During cold weather, remove ice and snow from within forms. Do not use de-icing salts or water to clean out forms, unless formwork and concrete construction proceed within heated enclosure. Use compressed air or other means to remove foreign matter.

3.7 FORMWORK TOLERANCES

A. Construct formwork so as to maintain tolerances required by ACI 347, Chapter 3.3, except as otherwise noted.

3.8 FIELD QUALITY CONTROL

A. Inspect erected formwork, shoring, and bracing to ensure that work is in accordance with formwork design, and that supports, fastenings, wedges, ties, and items are secure. Do not reuse split, frayed, delaminated or otherwise damaged formwork.

3.9 FORM REMOVAL

A. The time for removal of forms shall comply with ACI 318. If curing temperatures are below 50°F (15°C), the time for removal shall be increased by fifty percent (50%). In no case shall forms or bracing be removed until concrete has gained sufficient strength to carry its own weight and imposed loads.

B. Loosen forms carefully. Do not wedge pry bars, hammers, or tools against finish concrete surfaces scheduled for exposure to view.

C. Store removed forms in manner that surfaces to be in contact with fresh concrete will not be damaged. Discard damaged forms.

END OF SECTION 03 10 00

SECTION 031000 - CONCRETE FORMWORK AND FORM ACCESSORIES - BUILDING CONCRETE

PART 1 - GENERAL

1.1 DESCRIPTION

This section covers design, construction, and treatment of formwork to confine and shape concrete to the required dimensions.

1.2 REFERENCE STANDARDS

A. ACI STANDARDS
ACI 117
ACI 301
ACI 318

B. ASTM STANDARDS
A 185-02
A 615-04b
C31 – 03a
C39 – 03
D994 – 98
D1751 – 99

FS
FS-SS-S-00210

1.3 SUBMITTALS

A. Formwork Release Agent: Submit data on the Formwork release agent proposed for use with each form surface to be used for acceptance unless otherwise specified in the Contract Documents.

B. Shop Drawings: When required by Contract Documents, submit shop drawings for Formwork.

C. Re-shoring: When re-shoring is permitted or required, submit for acceptance the plan of re-shoring procedures and operations in advance.

D. Control Joints for slabs on grade: If control joints are not shown in slabs on grade on the structural plans, the Contractor is to submit a drawing showing the proposed joint locations to the Architect for approval. Unless otherwise noted on the plans, control joints shall be spaced at 13' - 0" on center each way and shall be no closer than 5' - 0" from grade beam centerlines. Controls can be formed cold joints or saw joints. If saw joints are used the depth shall be as shown on the plans or 25% of the total slab depth. Saw joints

shall be installed as soon as the concrete has cured enough such that the saw will not leave an impression on the concrete.

E. Control Joint Filler: Submit data on control joint filler to be used for acceptance.

F. Construction Joints: If construction joints other than those indicated in the contract documents are desired, submit a request for acceptance.

G. Vapor Barrier: Submit data on under-slab vapor barrier for acceptance.

PART 2 - PRODUCTS

2.1 MATERIALS

A. Form-facing material shall be plywood, tempered concrete-form-grade hardboard, metal, plastic, paper or other acceptable material capable of producing the desired finish. Form-facing material shall produce a smooth, uniform texture on the concrete. Do not use form-facing material with raised grain, torn surfaces, worn edges, patches, dents, or other defects that will impair the texture of concrete surfaces.

B. Formwork Accessories: Use commercially manufactured accessories for formwork accessories that are partially or wholly embedded in concrete, including ties and hangers. Do not use non-fabricated wire form ties. Where indicated in the Contract Documents, use form ties with integral water barrier plates in walls.

C. Formwork Release Agents: Use commercially manufactured form release agents that will prevent formwork absorption of moisture, prevent bond with concrete, and not stain the concrete surfaces.

D. Expansion Joint Filler: Pre-molded expansion joint filler shall conform to ASTM D994, ASTM D1751, or ASTM D1752.

E. Control Joint Filler: Joint filler is to be either Euco Qwik Joint 200 manufactured by the Euclid Chemical Co., Joint Tite 750 manufactured by L & M Construction Chemicals, Inc., or Sikadur 51 SL manufactured by the Sika Corporation

F. Other Embedded Items: Sleeves, inserts, anchors, and other embedded items shall be of the material and design indicated in the Contract Documents.

G. Water Stops: Water stop materials shall be a single component, self-sealing adhesive compound, SF302 Synko-Flex water stop or an approved equal meeting the requirements of FS-SSS-210 and shall have a cross sectional area (as extruded) 1" x 1". Cross section (as installed) 5/8" x 1-1/2".

H. Rigid Foam Insulation: Lightweight inert compressible materials with a minimum density of 0.70 pounds per cubic foot and a minimum compressive resistance at 1% minimum deformation of 320 pounds per square foot. Rigid foam insulation shall cover the full width of the member above.

I. Cardboard Form Boxes: Form boxes are double wall corrugated fiber boards, laminated with water resistant adhesives and impregnated with waterproofing agents. Assembled units shall be capable of safely supporting a sustained 350#/sq. ft. for a minimum of thirty-six (36) hours after concrete has been placed. Provide all accessories to prevent concrete intrusion into the form boxes. Assemble per manufacturer's recommendations.

J. Unless otherwise specified, provide minimum 15 mil vapor barrier under building slabs similar to WR Meadows Sealtight Perminator or Stego Wrap Vapor Barrier. Seal vapor barrier joints with tape as required by manufacturer.

2.2 PERFORMANCE AND DESIGN REQUIREMENTS

A. Design and engineering of formwork shall be the responsibility of the Contractor. When required by the Contract Documents, design of formwork and preparation of formwork drawings shall be under the supervision of a professional engineer registered in the state where the work will be done.

B. Design formwork for construction loads, lateral pressure, and requirements of the applicable building code. Design formwork to withstand the pressure resulting from placement and vibration of concrete and to maintain specified tolerances.

C. Do not use earth cuts as forms for vertical or sloping surfaces unless required or permitted by the Contract Documents.

D. Maximum deflection of facing materials reflected on concrete surfaces exposed to view shall be 1/240 of the span between structural members of the formwork except for architectural concrete.

E. Locate and detail formed joints to the following requirements:

Locate and form construction joints that least impair strength of the structure, and submit information for acceptance of proposed location and treatment of construction joints that are not indicated on the project drawings. In general, locate construction joints near the middle of the spans of slabs, beams, and girders. When a beam intersects a girder at this joint, the joint in the girder shall be offset a distance equal to or greater than twice the width of the beam. Located joints in walls and columns at the underside of floors, slabs, beams, or girders and at the tops of footings or floor slabs. Make joints perpendicular to the main reinforcement.

F. Provide saw cut control joints in slabs on grade spaced at 12' - 6" maximum centers in both directions unless they are shown otherwise on the plans. Sawing is to begin as soon as the surface is firm enough so that it will not be torn or damaged by the blade.

G. For smooth form finish, arrangement of the facing material shall be orderly and symmetrical, with the number of seams kept to a practical minimum. Support facing material with studs or other backing capable of preventing excessive deflection within the tolerances specified.

2.3 FABRICATION AND MANUFACTURE

A. Formwork shall be tight to prevent loss of mortar from concrete. Provide watertight formwork when architectural concrete is specified.

B. Place 3/4" minimum chamfer strips in the corners of formwork to produce beveled edges on permanently exposed surfaces unless otherwise specified. Do not bevel re-entrant corners of edges of formed joints of concrete unless specified in the Contract Documents.

C. Provide temporary openings at the base of column and wall formwork and at other points where necessary to facilitate cleaning and inspection. Clean and inspect immediately before concrete is placed.

D. Fabricate form ties so ends or end fasteners can be removed, terminate the embedded portion of ties not less than (2) diameters, or twice the minimum cross-section dimension of the ties, from the formed concrete surface. In no case shall this distance be less than 3/4".

E. Locate water stops in joints where indicated on the Contract Documents. Use pieces of pre-molded water stop with a maximum practicable length to hold the number of end joints to a minimum. Make joints in water stops in accordance with the manufacturer's recommendations. Ensure that joints develop effective water tightness equal to the continuous water stop material, permanently develop not less than 50% of the mechanical strength of the parent section, and permanently retain flexibility.

PART 3 - EXECUTION

3.1 CONSTRUCTION AND ERECTION OF FORMWORK

A. At construction joints, lap contact surface of the form sheathing for flush surfaces exposed to view over the hardened concrete in the previous placement by not more than 1". Ensure formwork is held firmly against hardened concrete to prevent offsets or loss of mortar at construction joints and to maintain a true surface.

B. Unless specified in the Contract Documents, construct formwork so concrete surfaces conform to tolerance limits of ACI 117. The class of surface for offset between adjacent pieces of formwork facing material shall be Class C in accordance with ACI 117, unless otherwise specified.

C. Provide positive means of adjustment (wedges or jacks) of shores and struts. Do not make adjustments in the formwork after concrete has taken its initial set. Brace formwork securely against lateral deflection and lateral instability.

D. To maintain specified tolerances, camber formwork to compensate for anticipated deflections in formwork prior to hardening of concrete. Set formwork and intermediate screed strips for slabs accurately to produce designated elevations and contours of the

finished surface prior to removal of formwork. Ensure that edge forms and screed strips are sufficiently strong to support vibrating screeds or roller pipe screeds when the finish specified requires the use of such equipment.

E. When formwork is cambered, set screeds to a like camber to maintain required concrete thickness.

F. Fasten form wedges in place after final adjustment of forms and prior to concrete placement.

G. Anchor formwork to shores, supporting surfaces, or members to prevent upward or lateral movement of the formwork system during concrete placement.

H. Construct formwork for wall openings to facilitate removal and to counteract swelling of wood formwork.

I. Provide runways for moving equipment and support runways directly on the formwork or structural member without resting on the reinforcing steel.

J. Place sleeves, inserts, anchors, and embedded items required for adjoining work or for support of adjoining work prior to concrete placement.

K. Position and support expansion joint material, water stops, and other embedded items to prevent displacement. Fill voids in sleeves, inserts, and anchor slots temporarily with readily removable material to prevent entry of concrete into voids.

L. Clean surfaces of formwork and embedded materials of mortar, grout, and foreign material before concrete is placed.

M. Cover surfaces of formwork with acceptable formwork release agent. Apply form release agent before placing reinforcing steel and concrete. A field-applied formwork release agent or sealer of an acceptable type or an acceptable factory-applied non-absorptive liner may be used. Do not allow formwork release agent to puddle in the forms. Do not allow formwork release agents to contact reinforcing steel or hardened concrete against which fresh concrete is to be placed.

3.2 REMOVAL FOR FORMWORK

A. When finishing is required, remove forms as soon as removal operations will not damage concrete.

B. Remove top forms on sloping surfaces of concrete as soon as removal will not allow concrete to sag. Perform needed repairs or treatment required at once and follow immediately with specified curing.

C. Loosen wood formwork for wall openings when this can be accomplished without causing damage to concrete.

D. Do not allow removal of formwork for columns, walls, sides of beams, and other parts not supporting the weight of the concrete to damage the concrete. Perform needed repair and treatment required on vertical surfaces at once and follow immediately with specified curing.

E. Unless otherwise specified, leave formwork and shoring in place to support the weight of concrete in beams, slabs, and in place structural members until concrete has reached the specified compressive strength, f_c=, or for no less than fourteen (14) days. If a lower compressive strength is proposed for removal for formwork and shoring, submit detail plans for review and acceptance, unless otherwise specified. When shores and other vertical supports are arranged to allow the form facing material to be removed without loosening or disturbing the shores and supports, the facing material may be removed after cumulative curing at not less than 50º F for twenty-four (24) hours after placing concrete, provided the concrete is sufficiently hard to not be damaged by form removal, and provided curing operations are maintained.

F. Construct formwork to permit easy removal.

3.3 RESHORING

A. When re-shoring is permitted or required, submit for acceptance a plan of re-shoring procedures and operations prior to their use.

B. While re-shoring is under way, do not permit any construction load on new construction.

C. During re-shoring, do not allow concrete in beam, slab, column, or any structural member to be loaded with combined dead and construction loads in excess of the loads permitted by the Architect/Engineer for the concrete compressive strength at the time of re-shoring.

D. Place re-shores in sequence with stripping operation.

E. Tighten re-shores to carry the required loads without over-stressing the concrete members. Leave re-shores in place until tests indicate that the concrete compressive strength has attained the minimum value specified.

F. For floors supporting shores under newly placed concrete, leave in place the original supporting shores or re-shore. The shoring or re-shoring system and the supporting slabs shall have capabilities sufficient to resist the anticipated loads. Re-shores shall be located directly under a shore position.

G. In multi-story buildings, extend re-shoring over a sufficient number of stories, two (2) stories minimum to distribute the weight of newly placed concrete, forms, and construction live loads.

3.4 STRENGTH OF CONCRETE REQUIRED FOR REMOVAL OF FORMWORK

When removal of formwork or re-shoring is based on concrete reaching a specified compressive strength, concrete will be presumed to have reached this strength when test cylinders, field cured along with the concrete they represent, have reached the compressive strength specified for removal of formwork or re-shoring. Mold cylinders in accordance with ASTM C 31, and cure them under the same conditions for moisture and temperatures as used for the concrete they represent. Test cylinders in accordance with ASTM C 39.

3.5 FIELD QUALITY CONTROL

A. Establish and maintain controls and bench marks in an undisturbed condition until final completion and acceptance of the project.

B. Variations from plumb and designated building lines shall not exceed the tolerances specified in ACI 117.

END OF SECTION 031000

SECTION 031001 – UNDER-SLAB VAPOR BARRIER

PART 1 – GENERAL

1.1 SUMMARY

A. Products supplied under this section:
   1. Vapor barrier, seam tape, and mastic for installation under concrete slabs.

1.2 REFERENCES

A. American Society for Testing and Materials (ASTM):
   1. ASTM E 1745-09 Standard Specification for Plastic Water Vapor Retarders Used in Contact with Soil or Granular Fill Under Concrete Slabs.
   2. ASTM E 154-99 (2005) Standard Test Methods for Water Vapor Retarders Used in Contact with Earth Under Concrete Slabs, on Walls, or as Ground Cover.
   3. ASTM E 96-05 Standard Test Methods for Water Vapor Transmission of Materials.
   4. ASTM F 1249-06 Standard Test Method for Water Vapor Transmission Rate Through Plastic Film and Sheeting Using a Modulated Infrared Sensor.
   5. ASTM E 1643-09 Selection, Design, Installation, and Inspection of Water Vapor Retarders Used in Contact with Earth or Granular Fill Under Concrete Slabs.

B. American Concrete Institute (ACI):
   1. ACI 302.2R-06 Guide for Concrete Slabs that Receive Moisture-Sensitive Flooring Materials.

1.3 SUBMITTALS

A. Quality control/assurance:
   1. Summary of test results per paragraph 9.3 of ASTM E1745.
   2. Manufacturer's samples, literature.
   3. Manufacturer's installation instructions for placement, seaming, penetration repair, and perimeter seal per ASTM E1643.
   4. All mandatory ASTM E1745 testing must be performed on a single production roll per ASTM E1745 Section 8.1.
   5. *Contact vapor barrier manufacturer to coordinate an onsite review of the vapor barrier installation prior to the concrete pour.*

PART 2 – PRODUCTS

2.1 MATERIALS

A. Vapor barrier must have all of the following qualities:
   1. Permeance of less than 0.01 Perms [grains/(ft^2 · hr · inHg)] as tested in accordance with ASTM E 1745 Section 7.
   2. Other performance criteria:

a. Strength: ASTM E 1745 Class A.
b. Thickness: 15 mils minimum

3. Provide third party documentation that all testing was performed on a single production roll per ASTM E1745 Section 8.1

B. Vapor barrier products:
1. Basis of Design: Stego Wrap Vapor Barrier (15-mil) by Stego Industries LLC
2. Griffolyn Vaporguard by Reef Industries

2.2 ACCESSORIES

A. Seams:
1. Stego Tape by Stego Industries, LLC
2. Griffolyn Fab Tape by Reef Industries

B. Perimeter/edge seal:
1. Stego Crete Claw by Stego Industries LLC
2. Griffolyn White Sealant Tape by Reef Industries

C. Sealing Penetrations of Vapor Barrier:
1. Stego Mastic by Stego Industries LLC
2. Stego Tape by Stego Industries LLC
3. Griffolyn Fab Tape by Reef Industries

PART 3 – EXECUTION

3.1 PREPARATION

A. Ensure that base material is approved by Architect or Geotechnical Engineer.
1. Level and compact base material.

3.2 INSTALLATION

A. Install vapor barrier in accordance with manufacturer's instructions and ASTM E 1643.
1. Unroll vapor barrier with the longest dimension parallel with the direction of the concrete placement and face laps away from the expected direction of the placement whenever possible.
2. Extend vapor barrier to the perimeter of the slab. If practicable, terminate it at the top of the slab, otherwise (a) at a point acceptable to the structural engineer or (b) where obstructed by impediments, such as dowels, waterstops, or any other site condition requiring early termination of the vapor barrier. At the point of termination, seal vapor barrier to the slab itself using manufacturer's perimeter seal, per manufacturer's instructions.
3. Overlap joints 6 inches and seal with manufacturer's seam tape.
4. Apply manufacturer's perimeter seal to a clean and dry vapor barrier.
5. Seal all penetrations (including pipes) per manufacturer's instructions.
6. Avoid the use of non-permanent stakes driven through vapor retarder.

7. If non-permanent stakes are driven through vapor retarder, repair as recommended by vapor retarder manufacturer.
8. Repair damaged areas with vapor barrier material of similar (or better) permeance, puncture and tensile.

END OF SECTION 031001

SECTION 032000 - CONCRETE REINFORCEMENT AND REINFORCEMENT SUPPORTS

PART 1 - DESCRIPTION

1.1 DESCRIPTION

This section covers materials, fabrication, placement and tolerances of reinforcement and reinforcement accessories.

1.2 REFERENCE STANDARDS

A. ACI STANDARDS
ACI 117
ACI 301
ACI 318

B. ASTM STANDARDS
A 185-02
A 615-04b

1.3 SUBMITTALS, DATA AND DRAWINGS

Unless otherwise required by Contract Documents, submit the following data and drawings for review and acceptance before fabrication and execution in accordance with the General Requirements of this project.

A. Placing Drawings: Submit placing drawings showing fabrication dimensions and locations for placement of reinforcement and reinforcement supports.

B. Splices: Submit a list and request to use splices not indicated in Contract Documents.

C. Mechanical Connections: Submit request for the use of mechanical connections not shown on the Project Drawings.

D. Field Bending: Submit requests and procedure to field bend or straighten reinforcement partially embedded in concrete.

1.4 MATERIALS DELIVERY, STORAGE, AND HANDLING

Prevent bending, coating with earth, oil, or other material, or otherwise damaging the reinforcement.

PART 2 - PRODUCTS

2.1 MATERIALS

A. Reinforcing Bars: Bars used as reinforcement shall be deformed except spirals and welded wire fabric, which may be plain. Reinforcement shall be ASTM A 615 Grade 60. Provide weldable Grade 60 reinforcement where bars are called for or required to be welded.

B. Welded Wire Fabric: ASTM A 185, with welded intersections spaced not farther apart than twelve (12) inches in the direction of principal reinforcement.

C. Wire Reinforcement Supports: Unless otherwise specified or permitted, use wire reinforcement supports complying with Class 1, maximum protection, or Class 2, moderate protection as indicated in Chapter 3 - Bar Supports of the CRSI Manual of Standard Practice.

D. Unless otherwise noted, provide corner bars at all bar intersections. Corner bars shall be the same size as the larger of the intersecting bars and each leg shall be forty-four (44) bar diameters in length.

2.2 FABRICATION

Bend all reinforcement cold unless heating is permitted. Fabricate reinforcement in accordance with fabricating tolerances of ACI 117.

PART 3 - EXECUTION

3.1 PREPARATION

When concrete is placed, all reinforcement shall be free of materials deleterious to bond. Reinforcement with rust, mill scale, or a combination of both will be considered satisfactory provided the minimum nominal dimensions, nominal weight, and the minimum average height of deformations of a hand-wire-brushed test specimen are not less than the applicable ASTM specification requirements.

3.2 PLACEMENT

A. Tolerances: Place, support, and fasten reinforcement as shown on the Project Drawings. Do not exceed the placing tolerances specified in ACI 117 before concrete is placed. Placing tolerances shall not reduce cover requirements except as specified in ACI 117.

B. Reinforcement Relocation: When necessary to move reinforcement beyond the specified placing tolerances to avoid interference with other reinforcement, conduits, or embedded items, submit the resulting arrangement of reinforcement for acceptance.

C. Concrete Cover: Minimum concrete cover for reinforcement shall be in accordance with the latest edition of ACI 318 - BUILDING CODE REQUIREMENTS FOR STRUCTURAL CONCRETE.

Tolerances on minimum concrete cover shall meet the requirements of ACI 117.

D. Reinforcement supports: Unless otherwise permitted:
1. Place reinforcement supported from the ground or mud mat on precast concrete reinforcement supports.
2. Place reinforcement supported from formwork on reinforcement supports made of concrete, metal, or plastic.

E. Welded wire fabric: For slabs on grade, extend welded wire fabric to within two (2) inches of the concrete edge. Lap edges and ends of fabric sheets a minimum of one (1) mesh spacing. Welded wire fabric may extend through contraction joints only where permitted. Support welded wire fabric during placing of concrete to assure required positioning in the slab. Do not place welded wire fabric on grade and subsequently raise into position in concrete.

F. Column dowels: Furnish and use templates for placement of column dowels unless otherwise permitted.

G. Make splices as indicated on the Project Drawings unless otherwise permitted. Mechanical connections for reinforcement not shown on the Project Drawings may be used when accepted.

H. Field bending or straightening: When permitted, bend or straighten reinforcement partially embedded in concrete in accordance with the following procedures.

Reinforcing bar sizes No. 3 through No. 5 may be bent cold the first time provided reinforcing bar temperature is above 32º F.

I. Minimum inside bend diameters shall be six (6) bar diameters for No. 3 through No. 8 bars, eight (8) bar diameters for No. 9 through No. 11 bars, and ten (10) bar diameters for No. 14 and No. 18 bars. In addition, beginning of the bend shall not be closer to the concrete surface than the minimum diameter of bend.

J. Field cutting of reinforcement: Reinforcement shall not be cut in the field except when specifically permitted.

K. Reinforcement through expansion joint: Do not continue reinforcement or other embedded metal items bonded to concrete through expansion joints. Dowels bonded on only one (1) side of a joint and water stops may extend through the joint.

END OF SECTION 032000

SECTION 03 20 01 – CONCRETE REINFORCEMENT FOR LANDSCAPE

PART 1 - GENERAL

1.1 RELATED DOCUMENTS

A. Drawings and general provisions of the Contract, including General and Supplementary Conditions and other Division 01 Specification Sections, apply to this Section.

1.2 SUMMARY

A. Section Includes the following items shown in the Landscape Drawings:
   1. Concrete Wall Footing
   2. Miscellaneous

B. Related Requirements:
   1. Section 031000 “Concrete Formwork”
   2. Section 033101 “Cast-in-Place Concrete”

1.3 REFERENCES

A. ACI 301-84 - Structural Concrete for Buildings (Revised 1988).

B. ACI 318-95/318R-95 - Building Code Requirements for Reinforced Concrete.

C. ACI 315 - Manual of Standard Practice for Detailing Reinforced Concrete Structures.

D. ANSI/ASTM A82 - Cold Drawn Steel Wire for Concrete Reinforcement.

E. ANSI/ASTM A185 - Welded Steel Wire Fabric for Concrete Reinforcement.

F. SP-66-88 - ACI Detailing Manual.

G. ANSI/ASTM A496 - Deformed Steel Wire Fabric for Concrete Reinforcement.

H. ANSI/ASTM A497 - Welded Deformed Steel Wire Fabric for Concrete Reinforcement.

I. ANSI/AWS D1.4 - Structural Welding Code for Reinforcing Steel.

J. ANSI/AWS D12.1 - Reinforcing Steel Welding Code.

K. ASTM A615 - Deformed and Plain Billet Steel Bars for Concrete Reinforcement.

L. CRSI - Concrete Reinforcing Steel Institute Manual of Practice.

M. CRSI 63 - Recommended Practice for Placing Reinforcing Bars.

N. CRSI 65 -Recommended Practice for Placing Bar Supports, Specifications and Nomenclature

1.4 ACTION SUBMITTALS

A. Product Data: For each type of product indicated.

1.5 INFORMATIONAL SUBMITTALS

A. Submittals shall meet the requirements of Section 013400, Contractor's Submittals.

B. Record Data: Indicate bar sizes, spacings, locations, and quantities of reinforcing steel, bending and cutting schedules, supporting and spacing devices, and joint and splice locations.

C. Manufacturer's Certificate: Certify that products meet or exceed specified requirements.

D. Comply with ACI 315, Chapters 1 through 8.

E. Manufacturer's specifications and installation instructions for all proprietary products, including sleeves for welded splices.

1.6 QUALITY ASSURANCE

A. Perform work in accordance with referenced standards. Submit certified copies of mill test report of reinforcement materials analysis.

1.7 COORDINATION

A. Coordinate work with other trades, placement of formwork, formed openings and other work.

PART 2 - PRODUCTS

2.1 REINFORCEMENT

A. Reinforcing Bars: Deformed, new billet steel conforming to ASTM A615, Grade 60 for non-weldable bars and ASTM A706, Grade 60 for weldable bars. Grade 60 shall be used for concrete paving.

B. Welded Wire Fabric: ASTM A185 for smooth wire and ASTM A457 for deformed wire.

2.2 ACCESSORY MATERIALS

A. Tie Wire: Minimum 16-gauge annealed type.

B. Supports for Reinforcement: Conform to CRSI 63.

C. Chairs, Bolsters, Bar Supports, Spacers: Sized and shaped for strength and support of reinforcement during concrete placement conditions including load bearing pad on bottom to prevent settling or vapor barrier puncture.

D. Special Chairs, Bolsters, Bar Supports, Spacers Adjacent to Weather Exposed Concrete Surfaces: Plastic coated steel or stainless-steel type, size and shape as required.

E. Splices: All splices shall consist of a four-foot overlap of the rebar.

2.3 FABRICATION

A. Fabricate concrete reinforcing in accordance with CRSI Manual of Practice. Locate reinforcing splices not indicated on Plans at point of minimum stress. Review location of splices with ENGINEER.

PART 3 - EXECUTION

3.1 PLACEMENT

A. Place, support and secure reinforcement against displacement by means of accepted spacers, chairs or hangers. Do not deviate from required position.

B. Do not displace or damage vapor barrier.

C. Accommodate placement of formed openings.

D. Conform to AC1 318 code for concrete cover over reinforcement. Concrete surfaces in contact with liquids shall have 2-inch cover.

E. Clean reinforcement to remove loose rust, mill scale, oil, earth, ice, and other materials which might reduce or destroy bond with concrete.

3.2 FIELD QUALITY CONTROL

A. Concrete shall not be placed until reinforcing steel is inspected by OWNER's Representative. All concrete placed in violation of this provision will be rejected. The CONTRACTOR shall give OWNER's Representative 48 hours notice prior to completion of reinforcement placement.

END OF SECTION 03 20 01

SECTION 033000 – CAST-IN-PLACE CONCRETE (NO FLY ASH ALLOWED)

PART 1 – GENERAL REQUIREMENTS

1.1 DESCRIPTION

This section covers design, delivery, placement, and testing for cast-in-place concrete mixed without fly ash.

1.2 REFERENCE STANDARDS

A. ACI STANDARDS:
ACI 117
ACI 301
ACI 318

B. ASTM STANDARDS
A 185–02
A 615-04b
C 31-03a
C 33-03
C 39-03
C 42-04
C 94-04
C 138-01
C 143-03
C 150-04a
C 171-03
C 172-04
C 173-01
C 192-02
C 231-04
C 260-01
C 309-03
C 494-04
C 595-03
C 597-02
C 805-02
C 1017-03
C 1064-04
C 1077-02
C 1155-14

C. AASHTO T260-84

1.3 SUBMITTALS

A. General – Submittals required in this specification shall be submitted for review and acceptance.

B. Product Data – Submit manufacturer's product data with application and installation instructions for proprietary materials and items, admixtures, patching compounds, curing compounds, and others as requested by the Architect.

C. Testing and Inspection Reports – Testing agencies shall report results of concrete and concrete materials tests and inspections performed during the course of the work to the Owner, Architect/Engineer, Contractor, and the Concrete Supplier. Strength test reports shall include location in the work where the batch represented by test was deposited and the batch ticket number. Final reports shall be provided within (7) days of test completion.

1.4 QUALITY ASSURANCE

A. General – Concrete materials and operations may be tested and inspected by the Testing Agency as work progresses. Failure to detect defective work or material will not prevent rejection later when a defect is discovered, nor shall it obligate the Architect/Engineer for final acceptance.

B. Testing Agencies – Agencies that perform testing services on concrete materials shall meet the requirements of ASTM C 1077. Testing agencies performing the test shall be acceptable to the Architect/Engineer prior to performing any work. Field tests of concrete shall be made by an ACI Concrete Field Testing Technician Grade 1 in accordance with ACI CP1 or equivalent. Equivalent certification programs shall include requirements for written and performance examinations as stipulated in ACI Publication CP1.

C. Testing Responsibilities of Contractor:

1. Submit data on qualifications of proposed testing agency for acceptance. Use of testing services will not relieve the Contractor of the responsibility to furnish materials and construction in full compliance with the Contract Documents.

2. Duties and Responsibilities: Unless otherwise specified in the Contract Documents, the Contractor shall assume the following duties and responsibilities:

a. Qualify proposed materials and establish mixture proportions.

b. Furnish any necessary labor to assist the testing agency in obtaining and handling samples at the project site or at the source of the materials.

c. Advise the testing agency at least (24) hours in advance of operations to allow for completion of quality tests and for assignment of personnel.

d. Provide and maintain for the sole use of the testing agency adequate facilities for safe storage and proper curing of concrete test specimens on the job site for initial curing as required by ASTM C 31.

e. Submit data and test documentation on materials and mixture proportions.

f. Submit quality control program of the concrete supplier and provide copies of all test reports.

D. Testing Services – The testing agency shall perform the following testing services:

1. Obtain composite samples in accordance with ASTM C 172. Each sample shall be obtained from a different batch of concrete on a random basis, avoiding any selection of the test batch other than by a number selected at random before commencement of concrete placement. Obtain at least (1) composite sample for each (50) yd^3, or fraction thereof, of each design mixture of concrete placed in any (1) day. When the total quantity of concrete with a given design mixture is less than (25) yd^3, the strength tests may be waived by the Architect/Engineer, if in his judgment, adequate evidence of satisfactory strength is provided.

2. Conduct strength tests of concrete during construction in accordance with the following procedures:

   a. Mold and cure (4) cylinders from each sample in accordance with ASTM C 31. Record any deviations from the ASTM requirements in the test report.

   b. Test cylinders in accordance with ASTM C 39. Test (1) specimen at (7) days for information, (2) specimens at (28) days for acceptance, and hold (1) specimen to be tested as directed by the Architect/Engineer. The compressive strength test results for acceptance shall be the average of the compressive strengths from the (2) specimens tested at (28) days.

3. Determine slump of each composite sample and whenever consistency of concrete appears to vary, using ASTM C 143. In addition, the testing laboratory shall also perform a slump test on every truck. ESTIMATING SLUMP IS NOT ALLOWED.

4. Determine temperature of each composite sample in accordance with ASTM C 1064.

5. Air content tests will be made on samples from the first (3) batches in the placement and until (3) consecutive batches have air contents within the range specified at which time (1) test will be performed for each (100) cubic yards or fraction thereof of each design mixture of concrete placed in any (1) day. This test frequency will be maintained until a batch is not within the range specified, at which time testing of each batch will be resumed until (3) consecutive batches have air contents within the range specified. Additional tests may be performed as necessary for control. These air content tests may be taken on composite

samples or on samples from the batch at any time after discharge of (2) cubic feet of concrete.

6. The floor flatness (FF) and floor levelness (FL) shall be tested in accordance with ASTM E1155-14.

7. When it appears that material furnished or work performed by the Contractor fails to conform to the Contract Documents, testing agency will immediately report such deficiency to the Architect/Engineer, Contractor, and concrete supplier.

8. Testing agency and its representatives are not authorized to revoke, alter, relax, enlarge, or release any requirement of the Contract Documents, nor to accept any portion of the work.

9. Testing agency will report all test and inspection results to Architect/Engineer, Contractor and concrete supplier within (7) days after tests and inspections are performed.

E. Additional Testing and Inspection Services

1. The testing agency shall perform the following testing services when necessary, at the Contractor's expense:

   a. Additional testing and inspection required because of changes in materials or mixture proportions requested by the Contractor.

   b. Additional testing of materials or concrete occasioned by failure to meet specification requirements.

2. When material furnished or work performed by the Contractor fails to conform to the Contract Documents, the testing agency will perform the following testing services when require by the Architect/Engineer at the Contractor's expense:

   a. Inspect concrete batching, mixing, and delivery operations.

   b. Other testing or inspection services as required by the Architect/Engineer.

F. Tests on Hardened Concrete in Place

1. General: Tests on hardened concrete will be performed by the testing agency when such tests are needed. Testing shall be at the Contractor's expense when tests are performed to verify the strength of the structure when required by this specification. Owner will pay costs if tests are at his request and not required by this specification.

2. Non-Destructive Tests: Use of the rebound hammer in accordance with ASTM C 805, pulse velocity methods in accordance with ASTM C 597, or other non-destructive devices may be permitted by the Architect/Engineer in evaluating

the uniformity and relative concrete strength in place, or for selecting areas to be cored.

3. Core Tests

   a. When required by the Architect/Engineer, cores shall be obtained and tested in accordance with ASTM C 42.

   b. At least (3) representative cores shall be taken from each member or area of concrete in place that is considered potentially deficient. The location of cores is to be determined by the Architect/Engineer. If, before testing, cores show evidence of having been damaged subsequent to or during removal from the structure, replacement cores shall be taken.

   c. Fill core holes with low slump concrete or grout of a strength equal to or greater than the original concrete.

G. Evaluation of Concrete Strength Tests

1. Standard molded and cured strength specimens: Test results from standard molded and cured test cylinders shall be evaluated separately for each specified concrete design mixture. Evaluation will be valid only if tests have been conducted in accordance with procedures specified. For evaluation, each specified design mixture shall be represented by at least (5) tests.

2. Non-destructive tests: Test results will be evaluated by the Architect/Engineer and will be valid only if tests have been conducted by properly calibrated equipment in accordance with recognized standard procedures.

3. Core tests: Core tests will be evaluated by the Architect/Engineer and will be valid only if tests have been conducted in accordance with specified procedures.

H. Acceptance of Concrete Strength

1. Standard molded and cured strength specimens: The strength level of concrete will be considered satisfactory when the averages of all sets of (3) consecutive compressive strength test results equal or exceed the specified compressive strength f_c= and no individual strength test result falls below the specified compressive strength f_c= by more than (500) psi.

2. Non-destructive tests: Non-destructive tests shall not be used as the sole basis for accepting or rejecting concrete, but may be used when permitted to evaluate concrete where standard molded and cured cylinders have yielded results not meeting the criteria in Paragraph 1.

3. Core tests: Strength level of concrete in the area represented by core tests will be considered adequate when the average compressive strength of the cores are

equal to at least 85 percent of specified compressive strength f_c=, and if no single core is less than 75 percent of the specified compressive strength, f_c=.

I. Field Acceptance of Concrete

1. Air content: Concrete not within the limits of the air-entrainment specified shall not be used in the work.

2. Slump: Concrete not within the slump limits specified at the point of placement shall not be used in the work.

3. Temperature: Concrete not within temperature limits specified shall not be used in the work.

1.5 ACCEPTANCE OF STRUCTURE

A. General – Completed concrete work shall conform to applicable requirements of this Specification.

1. Concrete work that fails to meet (1) or more requirements of the Contract Documents but subsequently is repaired to bring the concrete into compliance may be accepted.

2. Concrete work that fails to meet (1) or more requirements of the Contract Documents and cannot be brought into compliance will be rejected.

3. Repair rejected concrete work by removing and replacing or by reinforcing with additional construction required by the Architect/Engineer.

4. Submit for acceptance the proposed repair methods, materials, and modifications needed to assure that concrete work will meet requirements of the Contract Documents.

5. Document repair work to bring concrete work into compliance with the Contract Documents and submit the documentation to the Architect/Engineer for acceptance.

6. Contractor shall pay all costs to bring concrete work into compliance with requirements of the specification.

7. Concrete members cast in the wrong location will be rejected.

B. Dimensional Tolerances

1. Formed surfaces resulting in concrete outlines smaller than permitted by the tolerances of ACI 117, may be considered deficient in strength and subject to the provisions of Paragraph D, Strength of Structure.

2. Formed surfaces resulting in concrete outlines larger than permitted by ACI 117 may be rejected. Excess materials will be subject to removal when required by the Architect/Engineer.

3. Inaccurately formed concrete surfaces that exceed ACI 117 tolerances may be rejected.

4. Concrete with tolerances and defects exceeding the specified limitations may be rejected.

C. Appearance

1. Concrete exposed to view with defects that adversely affect the appearance of the specified finish will be rejected.

2. Concrete exposed to view may be rejected for non-conforming appearance.

D. Strength of Structure

1. Criteria for determining potential strength deficience: Strength will be considered deficient and concrete work will be rejected when the work fails to comply with requirements which control the strength of the structure including, but not limited to, the following conditions:

a. Concrete strength failing to comply with requirements of the Contract Documents.

b. Reinforcing steel size, quantity, strength, position, or arrangement at variance with the requirements of the Contract Documents.

c. Concrete elements which differ from the required dimensions or location.

d. Curing not in accordance with Contract Documents.

e. Inadequate protection of concrete from extreme temperature and other environmental
conditions during early stages of hardening and strength development.

f. Mechanical injury, construction fires, accidents, or premature removal of formwork resulting in deficient strength.

2. Action required when strength is potentially deficient: When strength of the structure is considered potentially deficient, corrective actions may be required by the Architect/Engineer.

E. Durability

1. Criteria for determining potential durability deficiency: Durability of concrete work will be considered deficient and the concrete work will be rejected when it fails

to comply with the requirements which control durability of the structure including, but not limited to, the following conditions:

a. Strength failing to comply with that specified.

b. Materials for concrete not conforming with the specifications for Cements, Aggregated, Water, and Admixtures, including air entrainment.

c. Concrete not conforming with the air-entrainment requirements in the Contract Documents.

d. Curing not in accordance with the Contract Documents.

e. Inadequate protection of concrete from temperature and other environmental conditions during early stages of hardening and strength development.

2. Action required when durability is potentially deficient: When durability of the structure is considered to be deficient, the following actions will be taken by the Architect/Engineer:

a. Require that samples of the ingredient materials used in the concrete be obtained and tested.

b. Require that samples of hardened concrete be obtained from the structure by coring, sawing, or other acceptable means.

c. Require a laboratory evaluation of concrete and concrete materials to assess the ability of concrete to resist weathering action, chemical attack, abrasion, or other deterioration.

d. Concrete rejected for lack of durability shall be repaired or replaced as directed by the Architect/Engineer.

1.6 PROTECTION OF IN-PLACE CONCRETE

A. Loading and support of concrete – Do not allow construction loads to exceed the superimposed load which the structural member, with necessary supplemental support, is capable of carrying safely and without damage.

B. Protection from mechanical injury – During the curing period, protect concrete from damaging mechanical disturbances including load stresses, shock and harmful vibration. Protect concrete surfaces from damage by construction traffic, equipment, materials, rain or running water, and other adverse weather conditions.

PART 2 – CONCRETE MIXTURES

2.1 DESCRIPTION

Requirements for materials, proportioning, production, and delivery of concrete.

2.2 SUBMITTALS

A. Mixture proportions – Submit concrete mixture proportions by weight.

B. Concrete materials – Submit the following information for concrete materials:

1. For cementious material: types, classes.

2. For aggregates: types, pit or quarry locations, producer's names, gradations, specific gravities.

3. For admixtures: types, brand names, producers.

4. For water and ice: source of supply.

C. Mixture proportion adjustments – Submit any adjustments to mixture proportions or changes in materials, along with supporting documentation, made during the course of the work.

D. Time of discharge – When it is desired to exceed time for discharge of concrete required by ASTM C 94, submit a request along with a description of the precautions to be taken.

2.3 PRODUCTS

A. Materials

1. Cementious material – Unless otherwise specified, cementious material shall conform to ASTM C 150 Type I or Type II without the addition of cementious or pozzolanic mineral admixtures. Cementious material used in concrete shall be of the same brand and type, and from the same plant of manufacture as the cementious material used in the concrete represented by the submitted field test data or used in the trial mixtures. The use of fly ash or slag is not allowed.

2. Aggregates – Aggregates shall conform to ASTM C 33 unless otherwise specified. When a single size or a combination of (2) or more sizes of coarse aggregates are used, the final gradation shall conform to the grading requirements of ASTM C 33 unless otherwise specified or permitted.

3. Water and ice – Mixing water for concrete and water used to make ice shall meet the requirements of ASTM C 94.

4. Admixtures – When required or permitted, admixtures shall meet the requirements of the following:

a. Air entraining admixtures – ASTM C 260.

b. Chemical admixtures – ASTM C 494.

c. Chemical admixtures for use in producing flowing concrete – ASTM C 1017.

5. Change of materials – When brand, type, size, or source of cementious materials, aggregates, water, ice, or admixtures are proposed to be changed, new data or evidence which indicates that the change will not adversely affect the relevant properties of the concrete shall be submitted for acceptance prior to use in concrete.

B. Performance and Design Requirements

1. Cementious material content – The cementious material content shall be adequate for concrete to satisfy the specified requirements for strength, water-cementious material ratio and finishing ability.

2. Slump – Slump shall not exceed the specified slump. Concrete shall have, at the point of delivery, a slump of:

a. Ramps and sloping surfaces – 3" maximum.

b. Reinforced foundations – 1" minimum to 3" maximum.

c. Other concrete – 2" minimum to 4" maximum

d. Determine the slump by ASTM C 143. Slump tolerances shall meet the requirements of ACI 117. When use of a plasticing admixture conforming to ASTM C 1017 or when a Type F or G high range water reducing admixture conforming to ASTM C 494 is permitted to increase the slump of concrete, concrete shall have a slump of (2) to (4) inches before the admixture is added and a maximum slump of (6) inches at the point of delivery after the admixture is added, unless otherwise specified.

3. Size of coarse aggregate – Except when otherwise specified or permitted, nominal maximum size of coarse aggregate shall not exceed three-fourths of the minimum clear spacing between reinforcing bars, one-fifth of the narrowest dimensions between sides of forms, or one-third of the thickness of slabs or toppings.

4. Air content – See plans for air-entrainment requirements. Unless otherwise specified, air content for exterior exposed concrete at the point of delivery shall conform to the requirements of ACI – 301, Table 4.2.2.4 for mild exposure. For specified compressive strengths above 5,000 psi, the total air contents indicated in Table 4.2.2.4 may be reduced by (1) percent.

5. Chloride ion concentration – Unless otherwise specified, maximum water soluble chloride ion concentrations in hardened concrete at ages from (28) to (42) days contributed from the ingredients including water, aggregates, cementious materials, and admixtures shall not exceed .30% by weight of cement. When testing is performed to determine water soluble chloride ion content, test procedures shall conform to AASHTO T 260.

6. Concrete temperature – When the average of the highest and lowest temperature during the period from midnight to midnight is expected to drop below 40° F for more than (3) consecutive days, concrete shall be delivered to meet the following minimum temperature immediately after placement.

    - 55° F for sections less than (12) inches in the least dimension.
    - 50° F for sections (12) inches to (36) inches in the least dimension.
    - 45° F for sections (36) inches to (72) inches in the least dimension.
    - 40° F for sections greater than (72) inches in the least dimension.

    The temperature of concrete as placed shall not exceed these values by more than 20° F. These minimum requirements may be terminated when temperatures above 50° F occur during more than half of any (24) hour duration. Unless otherwise specified or permitted, the temperature of concrete as delivered shall not exceed 90° F.

7. Strength – The compressive strength is to be as specified on the drawings. Unless otherwise specified, strength requirements shall be based on the (28)-day compressive strength determined on a (6) x (12) inch cylindrical specimens made and tested in accordance with ASTM C 31 and C 39 respectively.

8. Water-cementious material ratio – The water-cement or water-cementious material ratio of the concrete for each portion of the work shall not exceed .50 for 3,000 psi concrete and .48 for higher strength concrete.

9. Proportioning – Proportion concrete to conform with Paragraph C – Performance and Design Requirements, to provide workability and consistency so concrete can be worked readily into forms and around reinforcement without segregation or bleeding, and to provide the compressive strength specified.

2.4 EXECUTION

A. Measuring, batching, and mixing – Production facilities shall produce concrete of the specified quality and conforming to the requirements of this Specification. Unless otherwise specified, measure, batch and mix concrete materials and concrete in conformance with ASTM C 94.

B. Delivery – Deliver concrete which will possess the specified characteristics in the freshly mixed state at the point of placing. Transport and deliver concrete in equipment conforming to the requirements of ASTM C 94.

1. Slump adjustment – When concrete arrives at the point of delivery with a slump below that which will result in the specified slump at the point of placement and is unsuitable for placing at that slump, the slump may be adjusted to the required value by adding water up to the amount allowed in the accepted mixture proportions unless otherwise specified by the Architect/Engineer. Addition of water shall be in accordance with ASTM C 94. Do not exceed the specified water-cementious material ratio or slump. Do not add water to concrete delivered in equipment not acceptable for mixing. After plasticizing or high-range water-reducing admixtures are added to the concrete at the site to achieve flowable concrete, do not add water to the concrete. Measure slump and air content of air-entrained concrete, after slump adjustment, to verify compliance with specified requirements.

2. Time of discharge – Time for completion of discharge shall be as specified by ASTM C 94,unless otherwise permitted. When discharge is permitted after more than (90) minutes have elapsed since batching or after the drum has revolved (300) revolutions, verify that air content of air-entrained concrete, slump, and temperature of concrete are as specified.

PART 3 – HANDLING, PLACING, AND CONSTRUCTIONG

3.1 EXECUTION

A. Preparation

1. Do not place concrete until data on materials and mixture proportions are accepted.

2. Before placing concrete in forms, complete the following:

   a. Comply with formwork requirements specified.

   b. Remove dirt, water, and other foreign material from surfaces, including reinforcement and embedded items, against which concrete will be placed.

   c. Comply with reinforcing steel placement requirements specified.

   d. Position and secure in place expansion joint material, anchors, and other embedded items.

   e. Obtain acceptance of finished preparation.

3. Before placing a concrete slab on grade, clean foreign material from the Subgrade and complete the following:

a. In-place density of Subgrade soils shall be uniform throughout the area and at least the minimum required by the Contract Documents.

b. Subgrade shall be free from frost or ice.

c. Subgrade shall be moist with no free water and no muddy or soft spots.

4. When high ambient temperatures necessitate protection of concrete immediately after placing or finishing, make provisions in advance of concrete placement for windbreaks, shading, fogging, sprinkling, ponding, or wet covering.

5. During ambient temperature conditions described in Section 2.03, Paragraph B, Subparagraph 6 – Concrete Temperature, make provisions in advance of concrete placement to maintain the temperature of the concrete as specified. Use heating, covering, or other means adequate to maintain required temperature without overheating or drying of concrete due to concentration of heat. Do not use combustion heaters unless precautions are taken to prevent exposure of the concrete to exhaust gases containing carbon dioxide.

B. Placement of concrete.

1. Wet weather – Do not begin to place concrete while rain, sleet, or snow is falling. Do not allow rain water to increase mixing water or to damage the surface of the concrete.

2. Cold weather – Concrete temperatures and ambient temperatures shall meet minimum temperature requirements of Section 2.03, Paragraph B, Sub-Paragraph 6 – Concrete Temperature.

3. Hot weather – The temperature of concrete as placed shall not exceed 90° F unless otherwise permitted. Loss of slump, flash set, or cold joints due to temperature of concrete as placed will not be acceptable. When temperature of concrete exceeds 90° F, obtain acceptance, when required, of proposed precautionary measures. When temperature of steel reinforcement, embedments, or forms is greater than 120° F, fog steel reinforcement, embedments, and forms with water immediately prior to placing concrete.

4. Conveying – Convey concrete from mixer to the place of final deposit rapidly by methods which prevent segregation or loss of ingredients and will assure the required quality of concrete. Do not use aluminum pipes or chutes.

5. Depositing – Deposit concrete continuously in (1) layer or in layers to have fresh concrete deposited on in-place concrete that is still plastic. Do not deposit fresh concrete on concrete that has hardened sufficiently to cause formation of seams or planes of weakness within the section, unless construction joint requirements are met. Do not use concrete that has surface dried, partially hardened, or contains foreign material. Do not subject concrete to any procedure that will cause segregation. Deposit concrete as near as practicable to the final position to avoid segregation.

6. Consolidating – Consolidate concrete by vibration. Concrete shall be thoroughly worked around reinforcement and embedded items and into corners of forms, eliminating all air or stone pockets which may cause honey-combing, pitting, or planes of weakness. Use internal vibrators of the largest size and power that can properly be used in the work as described in ACI – 301, Table 5.3.2.5. Workers shall be experienced in use of the vibrators. Do not use vibrators to move concrete within the forms.

7. Construction joints and other bonded joints – Locate construction joints as indicated on the Project Drawings or as accepted by the Architect/Engineer.

C. Finished formed surfaces – After removal of forms, give each formed surface (1) or more of the finishes as specified by the Architect/Engineer. Finishes are to be in accordance with ACI – 301, Section 5.3.3.

D. Finishing unformed surfaces – Place concrete at a rate that allows spreading, straight edging, and darbying or bullfloating before bleed water appears. Strike smooth the top of walls, buttresses, horizontal offsets, and other similar unformed surfaces and float them to a texture consistent with finish of adjacent formed surface. Finish slab surfaces as specified by the Architect/Engineer. Finishes are to be in accordance with ACI – 301. Flatness shall be F_F = 20 and levelness shall be F_L = 15 unless noted otherwise in the Construction Documents and shall meet the requirements of ACI – 117.

E. Sawed control joints – Where saw cut joints are required or permitted, start cutting as soon as concrete has hardened sufficiently to prevent dislodgement of aggregates. Saw a continuous slot to a depth of one-fourth the thickness of the slab but not less than (1) inch. Complete sawing within (12) hours after placement.

F. Curing and protection

1. General – Immediately after placement, protect concrete from premature drying, excessively hot or cold temperatures, and mechanical injury. Protect concrete during the curing period such that the concrete temperature does not fall below the requirements of Section 2.03, Paragraph B, Sub-Paragraph 6 – Concrete Temperature. Cure concrete in accordance with ACI – 301, 5.3.6.2 or 5.3.6.3 for (7) days after placement.

2. Formed concrete surfaces – Keep absorbent wood forms wet until they are removed. After form removal, cure concrete by (1) of the methods in Sub-Paragraph 3 – Unformed Concrete Surfaces.

3. Unformed concrete surfaces – After placing and finishing, use (1) or more of the following methods to preserve moisture in concrete:

   a. Ponding, continuous fogging or continuous sprinkling.

   b. Application of mats or fabric kept continuously wet.

c. Continuous application of steam (under 150° F).

d. Application of sheet materials conforming to ASTM C 171.

e. Application of a curing compound conforming to ASTM C 309. Apply the compound in accordance with manufacturer's recommendation after water sheen has disappeared from the concrete surface and after finishing operations. The rate of application shall not exceed 200 ft^2/gal. For rough surfaces, apply in (2) applications at right angles to each other, not to exceed 200 ft^2/gal. for each coat. Do not use curing compound on any surface where concrete or other material will be bonded unless the curing compound will not prevent bond or unless measures are to be taken to completely remove the curing compound from areas to receive bonded applications.

f. When the ambient temperature exceeds 90° F, either ponding, continuous fogging, continuous sprinkling or application of mats or fabric kept continuously wet are required for curing. Other methods of curing are not allowed.

G. Repair of surface defects: Repair tie holes and surface defects immediately after form removal. Where the concrete surface will be textured by sandblasting or bush-hammering, repair surface defects before texturing. Repairs are to meet the requirement of ACI – 301, Section 5.3.7.

END OF SECTION 033000

SECTION 03 31 01 - CAST IN PLACE CONCRETE FOR LANDSCAPE

PART 1 - GENERAL

1.1 RELATED DOCUMENTS

A. Drawings and general provisions of the Contract, including General and Supplementary Conditions and Division 01 Specification Sections, apply to this Section.

1.2 SUMMARY

A. Section Includes:
   1. Cast-in-Place Concrete Footings

B. Related Sections:
   1. Section 031000 "Concrete Formwork"
   2. Section 032000 "Concrete Reinforcement"

1.3 DEFINITIONS

A. Cementitious Materials: Portland cement. None of the following are allowed in any concrete for this project: blended hydraulic cement, fly ash and other pozzolans, ground granulated blast-furnace slag, and silica fume.

1.4 REFERENCES

A. ACI 301-84 - Structural Concrete for Buildings (Revised 1988).

B. ACI 302 - Guide for Concrete Floor and Slab Construction.

C. ACI 304 - Recommended Practice for Measuring, Mixing, Transporting and Placing Concrete.

D. ACI 305R - Hot Weather Concreting.

E. ACI 306R - Cold Weather Concreting.

F. ACI 308 - Standard Practice for Curing Concrete.

G. ACI 318-95/318-95R - Building Code Requirements for Reinforced Concrete.

H. ANSI/ASTM D1752 - Preformed Sponge Rubber and Cork Expansion Joint Fillers for Concrete Paving and Structural Construction.

I. ASTM C33-86 - Concrete Aggregates.

J. ASTM C94-86 - Ready-Mixed Concrete.

K. ASTM C150-86 - Portland Cement.

L. ASTM C260-86 - Air Entraining Admixtures for Concrete.

M. ASTM C494 - Chemical Admixtures for Concrete.

1.5 ACTION SUBMITTALS

A. Submit under provisions of Section 013300.

B. Product Data: Provide data on joint devices, coatings, attachment accessories, curing compounds, admixtures, mix designs, tests performed to establish mix designs, and physical capacity of mixing plant and trucking facilities.

C. Installer qualifications

D. Manufacturer's Installation Instructions: Indicate installation procedures and interface required with adjacent work

E. Other Action Submittals:
   1. Design Mixtures: For each concrete paving mixture. Include alternate design mixtures when characteristics of materials, Project conditions, weather, test results, or other circumstances warrant adjustments.

F.

1.6 PROJECT RECORD DOCUMENTS

A. Submit under the provisions of the GENERAL CONDITIONS. Accurately record actual locations of embedded utilities and components which are concealed from view.

B. CONTRACTOR shall furnish delivery tickets with each load of concrete delivered indicating amount or weights of each component in the load, the cubic yards in the load, the amount of water which may be added in the field without exceeding the specifications, the time batched, and truck number. Ticket shall e printed and legible.

1.7 QUALITY ASSURANCE

A. All work shall be performed in accordance with the standards referenced in Part 1.4. Cement and aggregate shall be obtained from the same source for all work.

B. Installer Qualifications: A qualified installer who employs qualified personnel on the Project, Flatwork Technicians with at least three (3) years of experience, Finishers with at least three (3) years of experience, and a Supervisor with at least ten (10) years of experience in concrete finishing and flatwork.

C. Manufacturer's Qualifications: A firm experienced in manufacturing ready-mixed concrete products and that complies with ASTM C94/C94M requirements for production facilities and equipment.

D. Preinstallation Conference: Conduct conference at Project site with the general contractor, the subcontractor placing the concrete, specialty concrete finish contractor (if different than concrete subcontractor), and the site superintendent.
   1. Review methods and procedures related to concrete placement, including but not limited to, the following:
      a. Finished product expectations
      b. Formwork construction, shoring, and removal
      c. Expansion joint and control joint layout and construction
      d. Concrete mixture design.
      e. Steel reinforcement installation.
      f. Quality control of concrete materials and concrete paving construction practices.
      g. Weather related adjustments

   2. Require representatives of each entity directly concerned with concrete paving to attend, including the following:

E. Mock-up
   1. Contractor shall construct an on-site mock-up for each element covered under this specification section. The mock-up shall be constructed in the same manner and with the same materials as those to be used for the final elements in order to demonstrate the aesthetic and build quality standards. The accepted mock-up shall become the standard for the entire job and shall remain undisturbed on site until the completion of this scope of work.

a. Wall and weir mock-ups shall demonstrate the exposed vertical finish, edge treatment, and top surface finish.
b. Mock-ups do not have to include the substrate or footing.
c. Mock-ups shall be constructed on a movable platform (pallet or similar) so that it may be moved around the site if required.

F. Concrete Testing Service: Owner shall engage (and pay for) a qualified independent testing agency to perform material evaluation tests.

G. Materials and installed work may require testing and retesting, as directed by the Landscape Architect, at anytime during progress work. Contractor shall allow free access to material stockpiles and facilities. Tests, including retesting of rejected materials for installed work, shall be done at the Contractor's expense.

H. For all concrete placement events, all steel reinforcement, other embedded items, and formwork shall be set and finalized a minimum of three (3) hours prior to the time of initial concrete placement to allow time for proper observation / inspection by the design team and the testing agency, as well as time for the resolution of any discrepancies. For any concrete placement events occurring before 10am, all items noted above shall be finalized by 4pm on the afternoon prior.

1.8 COORDINATION

A. Coordinate the placement of joint devices with erection of concrete formwork and placement of form accessories.
a. Contractor's superintendent.
b. Independent testing agency responsible for concrete design mixtures.
c. Concrete paving subcontractor.

1.9 PROJECT CONDITIONS

A. Traffic Control: Maintain access for vehicular and pedestrian traffic as required for other construction activities.

PART 2 - PRODUCTS

2.1 CONCRETE MATERIALS

A. Cementitious Material: Use the following cementitious materials, of same type, brand, and source throughout Project:
1. Portland Cement: ASTM C 150, white portland cement Type I/II.

B. Fine and Coarse Aggregates: ASTM C33.
1. Do not use aggregates containing soluble salts or other substances such as iron sulfides, pyrite, marcasite, ochre, or other materials that can cause stains on exposed concrete surfaces.
2. Fine Aggregate: Clean, sharp, natural sand free from loam, clay, lumps or other deleterious substances. Dune sand, bank run sand and manufactured sand are not acceptable.
3. Coarse Aggregate: Clean, uncoated, processed aggregate containing no clay, mud, loam, or foreign matter, as follows:
a. Crushed stone, processed from natural rock or stone in primarily brown and tan colors.
b. Wash gravel, either natural or crushed. Use of slag and pit or bank run gravel is not permitted.

c. Coarse Aggregate Size: Size to be ASTM C33, Nos. 57 or 67, except that No. 467 may be used for footings, foundation mats and walls 16 inches or greater in thickness.

C. Water: Clean and not detrimental to concrete.

2.2 ADMIXTURES

A. Air Entrainment: ASTM C260; MB-VR manufactured by Master Builders Company , Sika or approved equivalent.

B. Chemical: ASTM C494, Type A - Water Reducing Pozzolith manufactured by Master Builders Company, Sika, or approved equivalent.

C. Set-Control Admixtures: ASTM C494, as follows:
1. Type B, Retarding.
2. Type C, Accelerating.
3. Type D, Water-reducing and Retarding.
4. Type E, Water-reducing and Accelerating.
5. Type F, Water-reducing, High Range.

2.3 ACCESSORIES

A. Bonding Agent: ASTM C-881 and AASHTO M-235 manufactured by Sika, Dayton Superior, or approved equivalent.

B. Non-Shrink Grout: Submit product for approval under provisions of Section 013300.

C. Reinforcing doweling system for existing concrete shall conform to Section 032001 and shall be installed per the manufacturer's instructions.

2.4 EXPANSIOIN JOINTS

A. Provide a semi-rigid, closed-cell polypropylene foam, preformed joint filler that meets the following physical property requirements and fully complies with ASTM D8139.

1.	Compression Strength	30-60 psi	per ASTM D 545 or AASHTO T 42
2.	Compression Recovery	> 80%	per ASTM D 545 or AASHTO T 42
3.	Extrusion	< 0.1 in.	per ASTM D 545 or AASHTO T 42
4.	Density	>3.5 lbs./cu.ft.	per ASTM D 545 or AASHTO T 42
5.	Water Absorption	< 1.0%	per ASTM D 545 or AASHTO T 42
6.	Heat Resistance °F	392˚F± 5˚F	per ASTM D 5249
7.	Freeze Thaw Resistance	No change	per ASTM C 666 (300 cycles)
8.	UV Weathering	No change	per ASTM D 4329 (1000 hrs., Cycle A)
9.	Thickness	3/8" Min.	
10.	Width	6" Min.	

B. Manufacturers
1. Nomaco, WR Meadows, or Approved Equal

2.5 CONCRETE MIX

A. Provide concrete with the following mix design limitations where Class "A" concrete is specified (or where no Class is specified) to result in concrete placed in the field of minimum compressive strength of 4000 psi at 28 days based on test cylinders which are taken during concrete placement.

Unit	Measurement

Minimum Compressive Strength (7 day)	3000 psi
Minimum Compressive Strength (28 day)	4000psi
Coarse Aggregate	ASTM C33, No. 57
Fine Aggregate	ASTM C33
Water/Cement Ratio (maximum)	0.44 by weight
Air Entrainment	5-7 percent
Slump - Plus or minus 1 inch	4 inches
Minimum Cement Content	564 pounds per cy

B. The concrete mix design listed above for the various classes shall be proportioned to produce 28 days concrete compression strength above the specified 28 days concrete compression strength when cylinder test is made from concrete mixed and moisture cured in the laboratory as follows:

Specified 28 days strength	Laboratory 28 days test cylinder
fc = 3000 psi and under	fc + 1000 psi
fc = 4000 to 5000 psi	fc + 1200 psi

Adjustment in the limitation listed in mix design shall be made to produce the required strength of laboratory made and cured cylinder.

C. Use accelerating admixtures in cold weather only when approved by LANDSCAPE ARCHITECT. Use of admixtures will not relax cold weather placement requirements.

D. Do not use calcium chloride in concrete or in any admixture.

E. Use set retarding admixtures during hot weather only when approved by LANDSCAPE ARCHITECT.

F. Use air entraining agent in all concrete mix except for interior slabs subject to abrasion or unless otherwise shown.

G. Maximum chloride ion content for corrosion protection shall meet Table 4.4.1 listed in ACI 318/318R (1995). Testing for chloride ion content shall conform to AASHTO T260.

2.6 COATINGS

A. Penetrating Sealer: Transparent, non-yellowing, water- or solvent-based coating
   1. Composition: Silane-siloxane mixture
   2. Manufacturers:
      a. Clemons Concrete Coatings
      b. Concrete Sealers USA
      c. TK Products Construction Coatings
      d. WR Meadows
   3. Apply to exposed surfaces of retaining walls and steps per manufacturer's installation instructions.

PART 3 - EXECUTION

3.1 EXAMINATION

A. Verify site conditions prior to construction.

B. Verify requirements for concrete cover over reinforcement.

C. Verify that anchors, seats, plates, reinforcement and other items to be cast into concrete are accurately placed, positioned securely, and will not cause hardship in placing concrete.

3.2 PREPARATION

A. Prepare previously placed concrete by cleaning with steel brush and applying bonding agent in accordance with manufacturer's instructions.

B. In locations where new concrete is to be doweled to existing work, drill holes in existing concrete, insert steel dowels and pack solid with epoxy adhesive, unless capsule anchors or other form of fastening is shown on Plans.

3.3 FORMWORK

A. Design, erect, shore, brace, and maintain formwork, according to ACI 301, to support vertical, lateral, static, and dynamic loads, and construction loads that might be applied, until structure can support such loads.

B. Construct formwork so concrete members and structures are of size, shape, alignment, elevation, and position indicated, within tolerance limits of ACI 117.

C. Limit concrete surface irregularities, designated by ACI 117 and ACI 347R as abrupt or gradual, as follows:
   1. Class A, 1/8 inch for smooth-formed finished surfaces.
   2. Class B & C, 1/2 inch for rough-formed finished surfaces.

D. Construct forms tight enough to prevent loss of concrete mortar.

E. Fabricate forms for easy removal without hammering or prying against concrete surfaces. Provide crush or wrecking plates where stripping may damage cast concrete surfaces. Provide top forms for inclined surfaces steeper than 1.5 horizontal to 1 vertical.
   1. Install keyways, reglets, recesses, and the like, for easy removal.
   2. Do not use rust-stained steel form-facing material.

F. Set edge forms, bulkheads, and intermediate screed strips for slabs to achieve required elevations and slopes in finished concrete surfaces. Provide and secure units to support screed strips; use strike-off templates or compacting-type screeds.

G. Provide temporary openings for cleanouts and inspection ports where interior area of formwork is inaccessible. Close openings with panels tightly fitted to forms and securely braced to prevent loss of concrete mortar. Locate temporary openings in forms at inconspicuous locations.

H. Chamfer exterior corners and edges of permanently exposed concrete, unless otherwise indicated.

I. Form openings, chases, offsets, sinkages, keyways, reglets, blocking, screeds, and bulkheads required in the Work. Determine sizes and locations from trades providing such items.

J. Clean forms and adjacent surfaces to receive concrete. Remove chips, wood, sawdust, dirt, and other debris just before placing concrete.

K. Retighten forms and bracing before placing concrete, as required, to prevent mortar leaks and maintain proper alignment.

L. Coat contact surfaces of forms with form-release agent, according to manufacturer's written instructions, before placing reinforcement.

3.4 REMOVING AND REUSING FORMS

A. General: Formwork for sides of beams, walls, columns, and similar parts of the Work that does not support weight of concrete may be removed after cumulatively curing at not less than 50 deg F for 24 hours after placing concrete, if concrete is hard enough to not be damaged by form-removal operations and curing and protection operations are maintained.
   1. Remove forms only if shores have been arranged to permit removal of forms without loosening or disturbing shores.

B. Clean and repair surfaces of forms to be reused in the Work. Split, frayed, delaminated, or otherwise damaged form-facing material will not be acceptable for exposed surfaces. Apply new form-release agent.

C. When forms are reused, clean surfaces, remove fins and laitance, and tighten to close joints. Align and secure joints to avoid offsets. Do not use patched forms for exposed concrete surfaces unless approved by Architect.

3.2 JOINTS

A. General: Construct joints true to line with faces perpendicular to surface plane of concrete.

B. Construction Joints: Install so strength and appearance of concrete are not impaired, at locations indicated or as approved by Architect.
   1. Place joints perpendicular to main reinforcement. Do not continue reinforcement through sides of strip placements of floors and slabs (unless noted otherwise on drawings).
   2. Form joints as indicated on drawings. Do not use metal keyways
   3. Space vertical joints in walls as indicated. Locate joints beside piers integral with walls, near corners, and in concealed locations where possible.
   4. Use a bonding agent at locations where fresh concrete is placed against hardened or partially hardened concrete surfaces, where indicated on drawings.
   5. Use epoxy-bonding adhesive at locations where fresh concrete is placed against hardened or partially hardened concrete surfaces, where indicated on drawings.
   6. Construction joints shall not be placed in any slab areas with floor coverings prone to cracking, unless written approval is provided the Architect. When construction joints are allowed in slab areas with floor coverings prone to cracking, the contractor shall assure that joints are properly considered in floor covering installation as required to prevent reflective cracking.

C. Doweled Joints (as indicated on drawings): Install dowel bars and support assemblies at joints where indicated.

3.3 WATERSTOPS

A. Flexible Waterstops: Install in construction joints and at other joints indicated to form a continuous diaphragm. Install in longest lengths practicable. Support and protect exposed waterstops during progress of the Work. Field fabricate joints in waterstops according to manufacturer's written instructions.

B. Self-Expanding Strip Waterstops: Install in construction joints and at other locations indicated, according to manufacturer's written instructions, adhesive bonding, mechanically fastening, and firmly pressing into place. Install in longest lengths practicable.
   1. Place at locations indicated on plans.
   2. Place at concrete construction joints below site grade in order to avoid water intrusion into interior space.
      a. Place at wall to slab (or mat foundation) joints below site grade.
      b. Place at wall to wall joints below site grade.

3.5 PLACING CONCRETE

A. Place concrete in accordance with ACI 304.

B. Notify OWNER's representative 48 hours prior to completion of reinforcement placement.

C. Prior to placing concrete, ensure that reinforcement, inserts, embedded parts, formed joint fillers, joint devices and water stops are not disturbed during concrete placement.

D. Install joint fillers, primer and sealant in accordance with manufacturer's instructions.

E. Separate slabs on grade from vertical surfaces with 3/4-inch thick joint filler where shown on the Plans.

F. Extend joint filler from bottom of slab to within 1/4 inch of the finished slab surface. Conform to Section 079200 for finish joint sealer requirements.

G. Before test sampling and placing concrete, water may be added at Project site, subject to limitations of ACI 301 and in accordance with ASTM C94.
1. Determine initial slump prior to any water addition at Project site and before any significant concrete discharge.
2. Measure and record water added on Project site and resulting slump.
3. The amount of water added shall not exceed the amount allowed in the approved design mixture.
4. Do not add water to concrete after adding high-range water-reducing admixtures to mixture.
5. Do not exceed specified W/C ratio or slump per approved design mixture.
6. Do not add water to concrete delivered in equipment not acceptable for mixing.
7. Do not add water if more than 0.25 cubic yards of concrete has already been discharged from the mixer.
8. All water added shall be under the pressure and direction of flow required to achieve uniformity in concrete. Immediately after addition of water, the drum or blades of the truck mixer or agitator shall be turned an additional 30 revolutions or more if necessary, at mixing speed, until uniformity of concrete is achieved.

H. Deposit concrete continuously in one layer or in horizontal layers of such thickness that no new concrete will be placed on concrete that has hardened enough to cause seams or planes of weakness. If a section cannot be placed continuously, provide construction joints as indicated. Deposit concrete to avoid segregation.
1. Deposit concrete in horizontal layers of depth to not exceed formwork design pressures and in a manner to avoid inclined construction joints.
2. Consolidate placed concrete with mechanical vibrating equipment according to ACI 301.
3. Do not use vibrators to transport concrete inside forms. Insert and withdraw vibrators vertically at uniformly spaced locations to rapidly penetrate placed layer and at least 6 inches into preceding layer. Do not insert vibrators into lower layers of concrete that have begun to lose plasticity. At each insertion, limit duration of vibration to time necessary to consolidate concrete and complete embedment of reinforcement and other embedded items without causing mixture constituents to segregate.

I. Deposit and consolidate concrete for floors and slabs in a continuous operation, within limits of construction joints, until placement of a panel or section is complete.
1. Consolidate concrete during placement operations so concrete is thoroughly worked around reinforcement and other embedded items and into corners.
2. Maintain reinforcement in position on chairs during concrete placement.
3. Screed slab surfaces with a straightedge and strike off to correct elevations.
4. Slope surfaces uniformly to drains where required.
5. Begin initial floating using bull floats or darbies to form a uniform and open-textured surface plane, before excess bleedwater appears on the surface. Do not further disturb slab surfaces before starting finishing operations.

J. Cold-Weather Placement: Comply with ACI 306.1 and as follows. Protect concrete work from physical damage or reduced strength that could be caused by frost, freezing actions, or low temperatures.
   1. When average high and low temperature is expected to fall below 40 deg F for three successive days, maintain delivered concrete mixture temperature within the temperature range required by ACI 301.
   2. Do not place concrete when temperature is 36 deg F or below or if temperature is expected to reach 36 deg F (or below) within 12 hours of the anticipated time for completing a concrete pour.
   3. Do not use frozen materials or materials containing ice or snow. Do not place concrete on frozen subgrade or on subgrade containing frozen materials.
   4. Do not use calcium chloride, salt, or other materials containing antifreeze agents or chemical accelerators unless otherwise specified and approved in mixture designs.

K. Hot-Weather Placement: Comply with ACI 301, ACI 305R, and as follows:
   1. Maintain concrete temperature below 90 deg F at time of placement. Chilled mixing water or chopped ice may be used to control temperature, provided water equivalent of ice is calculated to total amount of mixing water. Using liquid nitrogen to cool concrete is Contractor's option.
   2. Fog-spray forms, steel reinforcement, and subgrade just before placing concrete. Keep subgrade uniformly moist without standing water, soft spots, or dry areas.

L. Ensure reinforcement, inserts, waterstops, embedded parts, and formed construction joint devices will not be disturbed during concrete placement.
   1. Maintain records of concrete placement. Record date, location, quantity, air temperature, and test samples taken.

M. Place concrete continuously between predetermined expansion, control, and construction joints.

N. Do not interrupt successive placement; do not permit cold joints to occur.

O. Screed floors and slabs on grade level to required level, maintaining surface flatness of maximum 1/4-inch in 10 ft.

3.6 FINISHING FORMED SURFACES

A. Concrete Finish Schedule
   1. Walls
      a. Exposed Top: Smooth Trowel
      b. Exposed Vertical Face: Smooth-Formed
      c. Non-Exposed Vertical Face: Rough-Formed
   2. Curbs
      a. Exposed Top: Medium Broom
      b. Exposed Vertical Faces: Medium Broom
   3. Weirs
      a. Exposed Top: Smooth Trowel
      b. Exposed Vertical Face: Rubbed-Formed
      c. Non-Exposed Vertical Face: Rough-Formed

B. Smooth-Formed Finish: (For formed vertical concrete surfaces exposed to view) As-cast concrete texture imparted by the specified form-facing material noted in Section 031000, arranged in an orderly and symmetrical manner with a minimum of seams. Repair and patch tie holes and defects. Remove fins and other projections that exceed specified limits on formed-surface irregularities.
   1. Apply to concrete surfaces exposed to public view

2. Apply to concrete surfaces specified to receive a rubbed finish, or to be covered with a coating or covering material applied directly to concrete.

C. Rough-Formed Finish: As-cast concrete texture imparted by form-facing material with tie holes and defects repaired and patched. Remove fins and other projections that exceed specified limits on formed-surface irregularities.
   1. Apply to weir walls and concrete surfaces not exposed to public view.

D. Rubbed Finishes: Where concrete surfaces are noted to receive a rubbed finish, consult with Landscape Architect to determine the type of rubbed finish prior to pouring of concrete. Apply one of the following to smooth-formed finished as-cast concrete as indicated or directed by Landscape Architect:

   1. Smooth-Rubbed Finish: Not later than one day after form removal, moisten concrete surfaces and rub with carborundum brick or another abrasive until producing a uniform color and texture. Do not apply cement grout other than that created by the rubbing process.

   2. Grout-Cleaned Finish: Wet concrete surfaces and apply grout of a consistency of thick paint to coat surfaces and fill small holes. Mix one part portland cement to one and one- half parts fine sand with a 1:1 mixture of bonding admixture and water. Add white portland cement in amounts determined by trial patches so color of dry grout will match adjacent surfaces. Scrub grout into voids and remove excess grout. When grout whitens, rub surface with clean burlap and keep surface damp by fog spray for at least 36 hours.

   3. Cork-Floated Finish: Wet concrete surfaces and apply a stiff grout. Mix one part portland cement and one part fine sand with a 1:1 mixture of bonding agent and water. Add white portland cement in amounts determined by trial patches so color of dry grout will match adjacent surfaces. Compress grout into voids by grinding surface. In a swirling motion, finish surface with a cork float.

E. Float Finish: Consolidate surface with power-driven floats or by hand floating if area is small or inaccessible to power driven floats. Restraighten, cut down high spots, and fill low spots. Repeat float passes and restraightening until surface is left with a uniform, smooth, granular texture.
   1. Apply float finish to surfaces indicated, to receive trowel finish and to be covered with fluid-applied or sheet waterproofing, built-up or membrane roofing, or sand-bed terrazzo.

F. Smooth Trowel Finish: After applying float finish, apply first troweling and consolidate concrete by hand or power-driven trowel. Continue troweling passes and restraighten until surface is free of trowel marks and uniform in texture and appearance. Grind smooth any surface defects that would telegraph through applied coatings.

G. Broom Finish: Provide a light broom finish on all exposed surfaces on curbs when not noted to receive a specific finish listed above. Draw a soft-bristle broom across float-finished concrete surface perpendicular to line of traffic to provide a uniform, fine-line texture.

H. Related Unformed Surfaces: At tops of walls, horizontal offsets, and similar unformed surfaces adjacent to formed surfaces, strike off smooth and finish with a texture matching adjacent formed surfaces. Continue final surface treatment of formed surfaces uniformly across adjacent unformed surfaces, unless otherwise indicated.

3.4 CONCRETE PROTECTING AND CURING

A. General: Protect freshly placed concrete from premature drying and excessive cold or hot temperatures. Comply with ACI 306.1 for cold-weather protection and ACI 301 for hot- weather protection during curing.

B. Evaporation Retarder: Apply evaporation retarder to unformed concrete surfaces if hot,

dry, or windy conditions cause moisture loss approaching 0.2 lb/sq. ft. x h before and during finishing operations. Apply according to manufacturer's written instructions after placing, screeding, and bull floating or darbying concrete, but before float finishing.

C. Formed Surfaces: Cure formed concrete surfaces, including underside of beams, supported slabs, and other similar surfaces. If forms remain during curing period, moist cure after loosening forms. If removing forms before end of curing period, continue curing for the remainder of the curing period.

D. Unformed Surfaces: Begin curing immediately after finishing concrete. Cure unformed surfaces, including floors and slabs, concrete floor toppings, and other surfaces.

E. Cure concrete according to ACI 308.1, by one or a combination of the following methods:
   1. Moisture Curing: Keep surfaces continuously moist for not less than seven days with the following materials:
      a. Water.
      b. Continuous water-fog spray.
      c. Absorptive cover, water saturated, and kept continuously wet. Cover concrete surfaces and edges with 12-inch lap over adjacent absorptive covers.
   2. Moisture-Retaining-Cover Curing: Cover concrete surfaces with moisture-retaining cover for curing concrete, placed in widest practicable width, with sides and ends lapped at least 12 inches, and sealed by waterproof tape or adhesive. Cure for not less than seven days. Immediately repair any holes or tears during curing period using cover material and waterproof tape.
      a. Moisture cure or use moisture-retaining covers to cure concrete surfaces to receive floor coverings.
      b. Moisture cure or use moisture-retaining covers to cure concrete surfaces to receive penetrating liquid floor treatments.
      c. Cure concrete surfaces to receive floor coverings with either a moisture-retaining cover or a curing compound that the manufacturer certifies will not interfere with bonding of floor covering used on Project.
   3. Curing Compound: Apply uniformly in continuous operation by power spray or roller according to manufacturer's written instructions. Recoat areas subjected to heavy rainfall within three hours after initial application. Maintain continuity of coating and repair damage during curing period.
      a. After curing period has elapsed, remove curing compound without damaging concrete surfaces by method recommended by curing compound manufacturer unless manufacturer certifies curing compound will not interfere with bonding of floor covering used on Project.

3.5 JOINT FILLING

A. Prepare, clean, and install joint filler according to manufacturer's written instructions.
   1. Defer joint filling until concrete has aged at least one month(s). Do not fill joints until construction traffic has permanently ceased.

B. Remove dirt, debris, saw cuttings, curing compounds, and sealers from joints; leave contact faces of joint clean and dry.

C. Install semirigid joint filler full depth in saw-cut joints and at least 2 inches deep in formed joints, unless noted otherwise in documents. Overfill joint and trim joint filler flush with top of joint after hardening.

3.6 CONCRETE SURFACE REPAIRS

A. Defective Concrete: Repair and patch defective areas when approved by Land-

scape Architect. Remove and replace concrete that cannot be repaired and patched to Landscape Architect's approval.

B. Patching Mortar: Mix dry-pack patching mortar, consisting of one part portland cement to two and one-half parts fine aggregate passing a No. 16 sieve, using only enough water for handling and placing.

C. Repairing Formed Surfaces: Surface defects include color and texture irregularities, cracks, spalls, air bubbles, honeycombs, rock pockets, fins and other projections on the surface, and stains and other discolorations that cannot be removed by cleaning.
   1. Immediately after form removal, cut out honeycombs, rock pockets, and voids more than 1/2 inch in any dimension in solid concrete, but not less than 1 inch in depth. Make edges of cuts perpendicular to concrete surface. Clean, dampen with water, and brush-coat holes and voids with bonding agent. Fill and compact with patching mortar before bonding agent has dried. Fill form-tie voids with patching mortar or cone plugs secured in place with bonding agent.
   2. Repair defects on surfaces exposed to view by blending white portland cement and standard portland cement so that, when dry, patching mortar will match surrounding color. Patch a test area at inconspicuous locations to verify mixture and color match before proceeding with patching. Compact mortar in place and strike off slightly higher than surrounding surface.
   3. Repair defects on concealed formed surfaces that affect concrete's durability and structural performance as determined by Landscape Architect.

D. Repairing Unformed Surfaces: Test unformed surfaces, such as floors and slabs, for finish and verify surface tolerances specified for each surface. Correct low and high areas. Test surfaces sloped to drain for trueness of slope and smoothness; use a sloped template.
   1. Repair finished surfaces containing defects. Surface defects include spalls, popouts, honeycombs, rock pockets, crazing and cracks in excess of 0.01 inch wide or that penetrate to reinforcement or completely through unreinforced sections regardless of width, and other objectionable conditions.
   2. After concrete has cured at least 14 days, correct high areas by grinding.
   3. Correct localized low areas during or immediately after completing surface finishing operations by cutting out low areas and replacing with patching mortar. Finish repaired areas to blend into adjacent concrete.
   4. Correct other low areas scheduled to receive floor coverings with a repair underlayment. Prepare, mix, and apply repair underlayment and primer according to manufacturer's written instructions to produce a smooth, uniform, plane, and level surface. Feather edges to match adjacent floor elevations.
   5. Correct other low areas scheduled to remain exposed with a repair topping. Cut out low areas to ensure a minimum repair topping depth of 1/4 inch to match adjacent floor elevations. Prepare, mix, and apply repair topping and primer according to manufacturer's written instructions to produce a smooth, uniform, plane, and level surface.
   6. Repair defective areas, except random cracks and single holes 1 inch or less in diameter, by cutting out and replacing with fresh concrete. Remove defective areas with clean, square cuts and expose steel reinforcement with at least a 3/4-inch clearance all around. Dampen concrete surfaces in contact with patching concrete and apply bonding agent. Mix patching concrete of same materials and mixture as original concrete except without coarse aggregate. Place, compact, and finish to blend with adjacent finished concrete. Cure in same manner as adjacent concrete.
   7. Repair random cracks and single holes 1 inch or less in diameter with patching mortar. Groove top of cracks and cut out holes to sound concrete and clean off dust, dirt, and loose particles. Dampen cleaned concrete surfaces and apply

bonding agent. Place patching mortar before bonding agent has dried. Compact patching mortar and finish to match adjacent concrete. Keep patched area continuously moist for at least 72 hours.

E. Perform structural repairs of concrete, subject to Landscape Architect's approval, using epoxy adhesive and patching mortar.

F. Repair materials and installation not specified above may be used, subject to Architect's approval.

3.7 FIELD QUALITY CONTROL

A. Field inspection and testing will be performed in accordance with ACI 301 and under the provisions of the General Conditions.

B. CONTRACTOR shall provide free access to the Work and cooperate with the appointed testing firm.

C. Submit proposed mix design of each class of concrete to inspection and testing firm for review prior to commencement of Work.

D. Tests of cement and aggregates may be performed to ensure conformance with specified requirements.

E. Four concrete test cylinders will be taken for every 75 or less cubic yards of each class of concrete placed.
1. When multiple trucks are used in a given day, evenly distribute the test cylinders between the number of trucks being used for that day.

F. One additional test cylinder will be taken during cold weather concreting, cured on job site under same conditions as concrete it represents.

G. One slump test will be taken for each set of test cylinders taken.

H. One air content test for each load of concrete at point of discharge or when indication of change requires.

I. Concrete Tests: Testing of composite samples of fresh concrete obtained according to ASTM C 172 shall be performed according to the following requirements:
1. Testing Frequency: Obtain one composite sample for each day's pour of each concrete mixture exceeding 5 cu. yd., but less than 25 cu. yd., plus one set for each additional 50 cu. yd. or fraction thereof.
a. When frequency of testing will provide fewer than five compressive-strength tests for each concrete mixture, testing shall be conducted from at least five randomly selected batches or from each batch if fewer than five are used.
2. Slump: ASTM C 143/C 143M; one test at point of discharge for each composite sample, but not less than one test for each day's pour of each concrete mixture. Perform additional tests when concrete consistency appears to change or is questionable.
a. Determine initial slump prior to any water addition to concrete at Project site and before any significant concrete discharge.
b. Measure and record water added to concrete on Project site and resulting slump.
c. Record amount of water indicated on batch ticket allowed to be added.
3. Air Content: ASTM C 231, pressure method, for normal-weight concrete; one test for each composite sample, but not less than one test for each day's pour of each concrete mixture.
4. Concrete Temperature: ASTM C 1064/C 1064M; one test hourly when air temperature is 40 deg F and below and when 80 deg F and above, and one test for each composite sample.

5. Unit Weight: ASTM C 567, fresh unit weight of structural lightweight concrete; one test for each composite sample, but not less than one test for each day's pour of each concrete mixture.
6. Compression Test Specimens: ASTM C 31/C 31M.
   a. Cast and laboratory cure five standard cylinder specimens for each composite sample.
   b. Testing Agency shall be responsible for providing curing container for composite samples on Site as required for initial curing period and verifying that standard-cured composite samples are cured in accordance with ASTM C31/C31M. Testing Agency shall document method of initial curing.
   c. The Contractor shall provide secured space, electrical power, and access for initial curing of test specimens.
7. Compressive-Strength Tests: ASTM C 39/C 39M.
   a. Test one specimen at 7 days, three specimens at 28 days, and hold one specimen for testing at 56 days, if necessary.
   b. A compressive-strength test shall be the average compressive strength from a set of three specimens obtained from same composite sample and tested at age indicated.
8. Strength of each concrete mixture will be satisfactory if every average of any three consecutive compressive-strength tests equals or exceeds specified compressive strength and no compressive-strength test value falls below specified compressive strength by more than 500 psi.
9. Test results shall be reported in writing to Architect, concrete manufacturer, and Contractor within 48 hours of testing. Reports of compressive-strength tests shall contain Project identification name and number, date of concrete placement, name of concrete testing and inspecting agency, location of concrete batch in Work (illustrated via highlighting of elements on structural plans), design compressive strength at 28 days, concrete mixture proportions and materials, concrete unit weight, compressive breaking strength, and type of break for both 7- and 28-day tests. Deviations from the requirements of the Contract Documents shall be clearly identified and described on the reports.
10. Nondestructive Testing: Impact hammer, sonoscope, or other nondestructive device may be permitted by Architect but will not be used as sole basis for approval or rejection of concrete.
11. Additional Tests: Testing and inspecting agency shall make additional tests of concrete when test results indicate that slump, air entrainment, compressive strengths, or other requirements have not been met, as directed by Architect. Testing and inspecting agency may conduct tests to determine adequacy of concrete by cored cylinders complying with ASTM C 42/C 42M or by other methods as directed by Architect.
12. Additional testing and inspecting, at Contractor's expense, will be performed to determine compliance of replaced or additional work with specified requirements.
13. Correct deficiencies in the Work that test reports and inspections indicate does not comply with the Contract Documents.

3.8 SCHEDULE - CONCRETE TYPES

A. Class "A" concrete shall be steel reinforced and shall include the following:
   1. Walls
   2. Slabs.
   3. Street paving.
   4. Girders.
   5. Columns.
   6. Drilled piers.
   7. Thrust blocks.

8. Footings

B. Class "B" concrete shall be placed without forms or with simple forms, with little or no reinforcing, and shall include the following:
   1. Equipment bases.
   2. Standard pipe supports (except thrust blocks).
   3. Fence post footings.
   4. Manhole bases.
   5. Pipe encasements.

C. Class "C" concrete shall be placed with or without forms and shall be unreinforced. It is intended for use in the following applications:
   1. Concrete fill.
   2. Working slab.

3.9 MODIFICATION AND REPAIR TO EXISTING CONCRETE

A. Cut, repair, reuse, demolish, excavate or otherwise modify parts of the existing structures or appurtenances, as indicated on the Contract Drawings, specified, or necessary to permit completion of the work. Finishes, joints, reinforcements, sealants, etc. are specified under respective sections of Specification. All work shall conform with other requirements of this Section and to detail Drawings.

B. Mix proportions of materials used in the modifications and repair to existing concrete as indicated on the Drawings shall be:
   1. When new material other than non-shrink grout is shown to be connected to existing concrete, add the following cement mixtures depending on the depths called for or shown on the Drawings:
      a. Less than or equal to 2 inches in depth.

Material	Volume
Cement	1.0
Sand	2.0
Water	5 gals/200 lbs. cement

      b. Greater than 2 inches to 12 inches in depth.

Material	Volume
Cement	1.0
Pea Gravel	2.5
Sand	2.0
Water	5 gals/200 lbs. cement

      c. Greater than 12 inches in depth.

Material	Volume
Concrete as specified under 2.1 MATERIALS in this section	2.0

   2. Epoxy Bonding Agent
      a. Epoxy bonding agent shall be a two component epoxy adhesive specifically formulated for bonding old concrete to new (plastic) concrete. Component A shall be an epoxy resin and Component B shall be epoxy hardener. The epoxy bonding agent shall be "Sikastix 370, Sikdadur Hi-Mod", by Sika Corporation, Lindhurst, New Jersey; "Pro Bond 821 or 822" by Protex Industries, Denver, Colorado; "Concresive 1170" by Adhesive Engineering Company, San Carlos, California; or equal.

b. The mixing ratio shall be as recommended by the manufacturer for the ambient temperature when placed. Furnish manufacturer's specific instruction for specific job application and obtain LANDSCAPE ARCHITECT's review prior to purchase.
c. Epoxy bonding agent shall conform to ASTM C-881 and corresponding tests for bond strength and shrinkage as specified in ASTM C-882, C-883, and C-884.
d. The properties of the cured material shall meet the following:
1) Compressive Strength (ASTMD-695)
48hour - 1000 psi
28day - 7000 psi
2) Tensile Strength (ASTM D-638)
7 day - 4000 psi
3) Bond Strength (ASTM C-882 or C-884) - 1500 psi
e. Approval requirements - The CONTRACTOR must furnish notarized certification that the material proposed for use meets all of the above requirements and that the material has been previously used successfully for the purpose described.

3. Epoxy Protectant - Sikagard 62 by Sika Chemical Corporation, Lindhurst, New Jersey, or equal.

C. Demolition of Existing Concrete shown to be removed on the Drawings shall be done by Sawcutting at limits of concrete as indicated on the Drawings. The CONTRACTOR shall be responsible for removing concrete in such a manner that surrounding concrete or existing reinforcing to be left in place and existing in place equipment is not damaged.

D. Connection to Existing Concrete
1. Roughen surface of existing concrete to be connected to new materials by sand-blasting, chipping, or scarifying. Thoroughly clean area of concrete to receive new materials of loose particles and dust or other contaminating objects.
2. Existing reinforcing to be left in place as shown on the Drawings shall be wire brushed to remove rust or concrete on the bar. The existing reinforcing shall be cut, bent, lapped, or welded to new reinforcing as shown on the Drawings and provided with a minimum of 1 inch of cover all around and at ends of the bar. The reinforcing shall be thoroughly cleaned of loose particles and dust before incorporating in new materials.
3. After existing concrete surface has been roughened and cleaned as specified above, apply epoxy bonding agent at connection surface. The field preparation and application of the epoxy bonding agent shall conform strictly with the manufacturer's recommendations. Immediately pour new cement mixture or non-shrink grout as detailed on the Drawings.

END OF SECTION 03 31 01

SECTION 034000 – PRE-CAST CONCRETE

PART 1 - GENERAL

1.1 DESCRIPTION

A. Provide all labor, materials and equipment necessary to furnish and install all precast elements shown
on the Plans and as hereinafter specified.

B. Additional steel reinforcing shall be provided as required for handling and erection.

C. Architectural precast is specified elsewhere.

1.2 APPLICABLE STANDARDS

A. American Concrete Institute (ACI):
1. ACI 315 Manual of Standard Practice for Detailing Concrete Structures
2. ACI 318 Building Code Requirements for Reinforced Concrete

B. Prestressed Concrete Institute (PCI):
1. PCI PCI Design Handbook, 2nd Edition

C. American Society for Testing & Materials (ASTM):
1. A 36 Structural Steel
2. A 615 Deformed and Plain Billet Steel Bars for Concrete Reinforcement
3. A 416 Steel Strand for Prestressed Concrete
4. A 185 Welded Steel Wire Fabric for Concrete Reinforcement
5. C 33 Concrete Aggregates
6. C 150 Portland Cement
7. C 330 Lightweight Aggregates for Structural Concrete
8. C 476 Mortar and Grout for Reinforcing Masonry

1.3 QUALITY ASSURANCE

A. Precast concrete shall be manufactured by a company recognized by the industry as a Manufacturer of this type of material and must show successful completion of similar and comparable work for a minimum period of two years.

B. Setting and erection of precast concrete shall be performed under the supervision of the Precast manufacturer by a contractor or sub-contractor experienced in this type of work.

1.4 SUBMITTALS

A. Before manufacturing precast elements, submit for review five (5) sets of complete shop Drawings showing layout, reinforcing and all details of construction.

B. In addition to the above, submit five (5) copies of manufacturer's product information indicating physical properties, load tables and other pertinent information.

PART 2 - PRODUCTS

2.1 MATERIALS

A. Cement shall be Portland Cement, ASTM C 150, Type 1.

B. Fine and coarse aggregates for normal weight concrete shall be ASTM C 33. Gradation of coarse aggregate shall be size number 67.

C. Aggregates for lightweight concrete shall be expanded clay in accordance with ASTM C 330. The gradation of the coarse aggregate shall be 3/4" to #4.

D. Reinforcing bars shall be deformed billet steel bars, ASTM A 615, Grade 60.

E. Welded wire fabric shall be ASTM A 185 with a minimum yield of 65,000 psi.

F. Pre-stressing strands shall be seven-wire, uncoated, stress- relieved steel strands, ASTM A 416, Grade 270.

G. Steel for base plates, bearing plates, weld plates, etc., shall be ASTM A 36.

H. Grout shall be a cement grout in accordance with ASTM C 476.

I. Concrete for prestressed beams and non-prestressed columns shall be normal weigh\ concrete (150 lbs/cu. ft.) with a minimum compressive strength of not less than 5000 psi in twenty-eight (28) days.

J. Concrete for hollow-core planks and double-tee roof units shall be a "sanded mix" of lightweight concrete consisting of a combination of lightweight coarse aggregate and natural sand weighing not more than 120 pounds per cubic foot with a minimum compressive strength of not less than 5000 psi in twenty-eight (28) days.

PART 3 - EXECUTION

3.1 FABRICATION

A. Manufacture of precast elements shall be by a precast concrete company experienced in this work and approved by the Architect.

B. All pre-stressed elements shall be pre-tensioned in accordance with the requirements of the ACI and PCI.

C. Contractor shall verify size and location of all openings with other trades. All openings shall be cast into the members.

C. The exposed faces of all precast elements shall have a smooth even finish compatible with the surface treatment specified elsewhere.

E. Additional mild steel reinforcing shall be provided as required for temperature reinforcement crack control and handling and erection.

F. Location of anchors, inserts and blockouts shall be ± 3/8" from center line of location shown on drawings.

G. Mark each pre-cast item to correspond to identification mark on shop drawings.

H. Precast manufacturer shall obtain from the General Contractor all embedded items such as inserts, anchors, sleeves, etc., that will be required by the General Contractor and the various sub-contractors and shall place all such items in the forms prior to pouring the precast elements.

I. Precast manufacturer shall verify the sizes and locations of all roof and floor openings with the General Contractor and the various sub-contractors prior to pouring the precast elements.

3.02 ERECTION

A. Precast elements shall be erected under the supervision and responsibility of the precast manufacturer.

B. Care shall be exercised in the erection of all elements so as not to damage the corners, edges, etc.

C. Neoprene bearing pads shall be provided at the bearing ends of all precast beams, hollow core slabs and double tee units.

D. Joints between adjacent hollow core slabs and all beam dowel holes shall be grouted after erection.

E. Double tee elements shall be jacked as required so that edges of adjacent elements are flush, afte which the adjacent weld plates shall be welded.

END OF SECTION

SECTION 034500 - PRECAST ARCHITECTURAL CONCRETE

PART 1 - GENERAL

1.1 SUMMARY

A. This Section includes the following:
   1. Precast architectural concrete panels.

B. Related Sections include the following:
   1. Division 079200 Section "Joint Sealants" for elastomeric joint sealants and sealant backings.

1.2 PERFORMANCE REQUIREMENTS

A. Structural Performance: Provide precast architectural concrete units and connections capable of withstanding design loads within limits and under conditions indicated.

B. Structural Performance: Provide precast architectural concrete units and connections capable of withstanding the following design loads within limits and under conditions indicated:
   1. Design Loads: Refer to Drawings.
   2. Seismic Loads: Design category C, Use group III.
   3. Wind Loads: Based on 90 mph (3 second gust).
   4. Design framing system to maintain clearances at openings, to allow for construction tolerances, and to accommodate live load deflection of primary building structure as follows:
      a. Upward and downward movement of 1/2 inch (13 mm).

1.3 ACTION SUBMITTALS

A. Product Data: For each type of product indicated.

B. Shop Drawings: Detail fabrication and installation of precast architectural concrete units. Indicate member locations, plans, elevations, dimensions, shapes, cross sections, limits of each finish, and types of reinforcement, including special reinforcement.
   1. Indicate separate face and backup mix locations and thicknesses.
   2. Indicate locations and extent and treatment of dry joints if two-stage casting is proposed.
   3. Indicate welded connections by AWS standard symbols. Detail loose and cast-in hardware, inserts, connections, and joints, including accessories.
   4. Indicate locations and details of anchorage devices to be embedded in other construction.
   5. Indicate locations and details of thin brick units and joint treatment.

6. Indicate locations and details of stone facings, anchors, and treatment of joints.
7. Comprehensive engineering analysis signed and sealed by the qualified professional engineer responsible for its preparation.

C. Samples: For each type of finish indicated on exposed surfaces of precast architectural concrete units, in sets of 3, illustrating full range of finish, color, and texture variations expected; approximately 12 by 12 by 2 inches (300 by 300 by 50 mm).

D. Samples for each thin brick unit required, including special shapes, showing the full range of colors, textures, and dimensions expected.
1. Grout Samples for Initial Selection: Color charts consisting of actual sections of grout showing the manufacturer's full range of colors.

1.4 INFORMATIONAL SUBMITTALS

A. Design Mixes: For each concrete mix.

B. Welding Certificates: Copies of certificates for welding procedures and personnel.

C. Qualification Data: For firms and persons specified in "Quality Assurance" Article to demonstrate their capabilities and experience. Include lists of completed projects with project names and addresses, names and addresses of architects and owners, and other information specified.

D. Material Test Reports: From a qualified testing agency indicating and interpreting test results of the following for compliance with requirements indicated:

E. Material Certificates: Signed by manufacturers certifying that each of the following items complies with requirements:
1. Concrete materials.
2. Reinforcing materials and prestressing tendons.
3. Admixtures.
4. Bearing pads.
5. Water-absorption test reports.

1.5 QUALITY ASSURANCE

A. Installer Qualifications: An experienced installer who has completed precast architectural concrete work similar in material, design, and extent to that indicated for this Project and whose work has resulted in construction with a record of successful in-service performance.

B. Fabricator Qualifications: A firm that complies with the following requirements and is experienced in manufacturing precast architectural concrete units similar to those indicated for this Project and with a record of successful in-service performance.
1. Assumes responsibility for engineering precast architectural concrete units to comply with performance requirements. This responsibility includes preparation of Shop Drawings and comprehensive engineering analysis by a qualified professional engineer.

2. Professional Engineer Qualifications: A professional engineer who is legally qualified to practice in jurisdiction where Project is located and who is experienced in providing engineering services of the kind indicated. Engineering services are defined as those performed for installations of precast architectural concrete that are similar to those indicated for this Project in material, design, and extent.
3. Participates in PCI's Plant Certification program and is designated a PCI-certified plant for Group A, Category A1--Architectural Cladding and Load Bearing Units or in APA's Plant Certification Program for Production of Architectural Precast Concrete Products and is designated an APA- certified plant.
4. Has sufficient production capacity to produce required units without delaying the Work.
5. Is registered with and approved by authorities having jurisdiction.

C. Testing Agency Qualifications: An independent testing agency, qualified according to ASTM C 1077 and ASTM E 329 to conduct the testing indicated, as documented according to ASTM E 548.

D. Design Standards: Comply with ACI 318 (ACI 318M) and the design recommendations of PCI MNL 120, "PCI Design Handbook--Precast and Prestressed Concrete."

E. Quality-Control Standard: For manufacturing procedures and testing requirements, quality-control recommendations, and dimensional tolerances for types of units required, comply with PCI MNL 117, "Manual for Quality Control for Plants and Production of Architectural Precast Concrete Products."

F. Product Options: Drawings indicate size, profiles, and dimensional requirements of precast concrete units and are based on the specific types of units indicated. Other fabricators' precast concrete units complying with requirements may be considered. Refer to Division 01 Section "Common Product Requirements."

G. Welding: Qualify procedures and personnel according to AWS D1.1, "Structural Welding Code--Steel"; and AWS D1.4, "Structural Welding Code--Reinforcing Steel."

H. Sample Panels: Before fabricating precast architectural concrete units, produce sample panels to establish the approved range of selections made under sample Submittals. Produce a minimum of 3 sets of full-scale sample panels, approximately 48 inches (1200 mm) long by 48 inches (1200 mm) high, to demonstrate the expected range of finish, color, and texture variations.
1. Locate panels where indicated or, if not indicated, as directed by Architect.
2. In presence of Architect, damage part of an exposed-face surface for each finish, color, and texture, and demonstrate materials and techniques proposed for repair of surface blemishes to match adjacent undamaged surfaces.
3. Maintain sample panels during construction in an undisturbed condition as a standard for judging the completed Work.
4. Demolish and remove sample panels when directed.

I. Mockups: Before installing precast architectural concrete units, build mockups to verify selections made under sample Submittals and to demonstrate aesthetic effects and qualities of materials and execution. Build mockups to comply with the following requirements, using materials indicated for the completed Work:
   1. Build mockups in the location and of the size indicated or, if not indicated, as directed by Architect.
   2. Notify Architect seven days in advance of dates and times when mockups will be constructed.
   3. Obtain Architect's approval of mockups before starting fabrication.
   4. In presence of Architect, damage part of an exposed face for each finish, color, and texture, and demonstrate materials and techniques proposed for repairs to match adjacent undamaged surfaces.
   5. Maintain mockups during construction in an undisturbed condition as a standard for judging the completed Work.
   6. Demolish and remove mockups when directed.
   7. Approved mockups may become part of the completed Work if undisturbed at time of Substantial Completion.

J. Preinstallation Conference: Conduct conference at Project site to comply with requirements of Division 01 Section "Project Management and Coordination."

1.6 DELIVERY, STORAGE, AND HANDLING

A. Deliver precast architectural concrete units to Project site in such quantities and at such times to ensure continuity of installation. Store units at Project site to prevent cracking, distorting, warping, staining, or other physical damage, and so markings are visible.

B. Lift and support units only at designated lifting and supporting points as shown on Shop Drawings.

1.7 SEQUENCING

A. Furnish anchorage items to be embedded in or attached to other construction without delaying the Work. Provide setting diagrams, templates, instructions, and directions, as required, for installation.

PART 2 - PRODUCTS

2.1 MOLD MATERIALS

A. Molds: Provide molds and, where required, form-facing materials of metal, plastic, wood, or another material that is nonreactive with concrete and dimensionally stable to produce continuous and true precast concrete surfaces within fabrication tolerances and suitable for required finishes

B. Form Liners: Units of face design, texture, arrangement, and configuration indicated.

2.2 REINFORCING MATERIALS

A. Reinforcing Bars: ASTM A 615/A 615M, Grade 60 (Grade 420), deformed.

B. Galvanized Reinforcing Bars: ASTM A 767/A 767M, Class II zinc coated, hot- dip galvanized after fabrication and bending, as follows:
1. Steel Reinforcement: ASTM A 615/A 615M, Grade 60 (Grade 420), deformed.

C. Epoxy-Coated Reinforcing Bars: ASTM A 775/A 775M or ASTM A 934/A 934M, as follows:
1. Steel Reinforcement: ASTM A 615/A 615M, Grade 60 (Grade 420), deformed.

D. Steel Bar Mats: ASTM A 184/A 184M, assembled with clips, as follows:
1. Steel Reinforcement: ASTM A 615/A 615M, Grade 60 (Grade 420), deformed bars.

E. Plain-Steel Wire: ASTM A 82.

F. Deformed-Steel Wire: ASTM A 496.

G. Plain-Steel Welded Wire Fabric: ASTM A 185, fabricated from steel wire into flat sheets.

H. Deformed-Steel Welded Wire Fabric: ASTM A 497, flat sheet.

I. Supports: Manufacturer's bolsters, chairs, spacers, and other devices for spacing, supporting, and fastening reinforcing bars and welded wire fabric in place according to CRSI's "Manual of Standard Practice," PCI MNL 117, and as follows:
1. For uncoated reinforcement, use all-plastic bar supports.
2. For zinc-coated reinforcement, use all-plastic bar supports.

2.3 PRESTRESSING TENDONS

A. Prestressing Strand: ASTM A 416/A 416M, Grade 250 or 270 (Grade 1725 or 1860), uncoated, 7-wire, low-relaxation strand.

2.4 CONCRETE MATERIALS

A. Portland Cement: ASTM C 150, Type I or Type III, gray and white, of same type, brand, and source.
1. Standard gray portland cement may be used for nonexposed backup concrete.

B. Normal-Weight Aggregates: Except as modified by PCI MNL 117, ASTM C 33, with coarse aggregates complying with Class 5S.
1. Face-Mix Coarse Aggregates: Selected, hard, and durable; free of material that reacts with cement or causes staining.
a. Gradation: Uniformly graded as required to match design reference sample.

2. Face-Mix Fine Aggregates: Selected, natural or manufactured sand of the same material as coarse aggregate, unless otherwise approved by Architect.

C. Lightweight Aggregates: ASTM C 330.

D. Coloring Admixture: ASTM C 979, synthetic mineral-oxide pigments or colored water-reducing admixtures, temperature stable, nonfading, and alkali resistant.

E. Water: Potable; free from deleterious material that may affect color stability, setting, or strength of concrete and complying with chemical limits of PCI MNL 117.

F. Air-Entraining Admixture: ASTM C 260, certified by manufacturer to be compatible with other required admixtures.

G. Water-Reducing Admixture: ASTM C 494, Type A.

H. Retarding Admixture: ASTM C 494, Type B.

I. Water-Reducing and Retarding Admixture: ASTM C 494, Type D.

J. High-Range, Water-Reducing Admixture: ASTM C 494, Type F.

K. High-Range, Water-Reducing and Retarding Admixture: ASTM C 494, Type G.

L. Plasticizing Admixture: ASTM C 1017.

2.5 STEEL CONNECTION MATERIALS

A. Carbon-Steel Shapes and Plates: ASTM A 36/A 36M.

B. Carbon-Steel Headed Studs: ASTM A 108, AISI 1018 through AISI 1020, cold finished; AWS D1.1, Type A or B, with arc shields.

C. Carbon-Steel Plate: ASTM A 283/A 283M.

D. High-Strength, Low-Alloy Structural Steel: ASTM A 572/A 572M.

E. Carbon-Steel Structural Tubing: ASTM A 500, Grade B.

F. Deformed-Steel Wire or Bar Anchors: ASTM A 496 or ASTM A 706/A 706M.

G. Carbon-Steel Bolts and Studs: ASTM A 307, Grade A (ASTM F 568M, Property Class 4.6); carbon-steel, hex-head bolts and studs; carbon-steel nuts; and flat, unhardened steel washers.

H. High-Strength Bolts and Nuts: ASTM A 325 (ASTM A 325M), Type 1, heavy hex steel structural bolts, heavy hex carbon-steel nuts, and hardened carbon- steel washers.

I. Finish: For exterior steel items, steel in exterior walls, and items indicated for galvanizing, apply zinc coating by hot-dip process according to ASTM A 123/A 123M, after fabrication, and ASTM A 153/A 153M, as applicable.
   1. Galvanizing Repair Paint: High-zinc-dust-content paint with dry film containing not less than 94 percent zinc dust by weight, and complying with DOD-P-21035A or SSPC-Paint 20.

J. Reglets: Stainless steel, unless otherwise specified in Division 07 Section "Sheet Metal Flashing and Trim."

K. Welding Electrodes: Comply with AWS standards.

L. Accessories: Provide clips, hangers, plastic shims, and other accessories required to install precast architectural concrete units.

2.6 BEARING PADS

A. Provide bearing pads for precast architectural concrete units as follows:
1. Elastomeric Pads: AASHTO M 251, plain, vulcanized, 100 percent polychloroprene (neoprene) elastomer, molded to size or cut from a molded sheet, 50 to 70 Shore A durometer, minimum tensile strength 2250 psi (15.5 MPa) per ASTM D 412.
2. Random-Oriented, Fiber-Reinforced Elastomeric Pads: Preformed, randomly oriented synthetic fibers set in elastomer. Surface hardness of 70 to 90 Shore A durometer.
3. Cotton-Duck-Fabric-Reinforced Elastomeric Pads: Preformed, horizontally layered cotton-duck fabric bonded to an elastomer. Surface hardness of 80 to 100 Shore A durometer.
4. Frictionless Pads: Tetrafluoroethylene, glass-fiber reinforced, bonded to mild-steel plate, of type required for in-service stress.

2.7 GROUT MATERIALS

A. Sand-Cement Grout: Portland cement, ASTM C 150, Type I, and clean, natural sand, ASTM C 144. Mix at ratio of 1 part cement to 2-1/2 parts sand, by volume, with minimum water required for placement and hydration.

B. Nonmetallic, Nonshrink Grout: Premixed, nonmetallic, noncorrosive, nonstaining grout containing selected silica sands, portland cement, shrinkage- compensating agents, plasticizing and water-reducing agents, complying with ASTM C 1107, of consistency suitable for application.

2.8 CONCRETE MIXES

A. Prepare design mixes for each type of concrete required.
1. Limit use of fly ash to not exceed, in aggregate, 20 percent of portland cement by weight.

B. Design mixes may be prepared by a qualified independent testing agency or by qualified precast plant personnel at precast architectural concrete fabricator's option.

C. Limit water-soluble chloride ions to the maximum percentage by weight of cement permitted by ACI 318 (ACI 318M).

D. Normal-Weight Concrete Face and Backup Mixes: Proportion mixes by either laboratory trial batch or field test data methods according to ACI 211.1, with materials to be used on Project, to provide normal-weight concrete with the following properties:
1. Compressive Strength (28 Days): 5000 psi (34.5 MPa).
2. Maximum Water-Cementitious Materials Ratio: 0.45.

E. Water Absorption: 12 to 14 percent by volume, tested according to PCI MNL 117.

F. Lightweight Concrete Backup Mixes: Proportion mixes by either laboratory trial batch or field test data methods according to ACI 211.2, with materials to be used on Project, to provide lightweight concrete with the following properties:
   1. Compressive Strength (28 Days): 5000 psi (34.5 MPa).
   2. Unit Weight: Calculated equilibrium unit weight of 115 lb/cu. ft. (1842 kg/cu. m), plus or minus 3 lb/cu. ft. (48 kg/cu. m), according to ASTM C 567.

G. Add air-entraining admixture at manufacturer's prescribed rate to result in concrete at point of placement having an air content complying with PCI MNL 117.

H. When included in design mixes, add other admixtures to concrete mixes according to manufacturer's written instructions.

2.9 MOLD FABRICATION

A. Molds: Accurately construct molds, mortar tight, of sufficient strength to withstand pressures due to concrete-placement operations and temperature changes and for prestressing operations.
   1. Place form liners accurately to provide finished surface texture indicated. Provide solid backing and supports to maintain stability of liners during concreting. Coat form liner with form-release agent.

B. Maintain molds to provide completed precast architectural concrete units of shapes, lines, and dimensions indicated, within fabrication tolerances specified.
   1. Edge and Corner Treatment: Uniformly chamfered.

2.10 FABRICATION

A. Cast-in Anchors, Inserts, Plates, Angles, and Other Anchorage Hardware: Fabricate anchorage hardware with sufficient anchorage and embedment to comply with design requirements. Accurately position for attachment of loose hardware, and secure in place during precasting operations. Locate anchorage hardware where it does not affect position of main reinforcement or concrete placement.

B. Furnish loose steel plates, clip angles, seat angles, anchors, dowels, cramps, hangers, and other hardware shapes for securing precast architectural concrete units to supporting and adjacent construction.

C. Cast-in reglets, slots, holes, and other accessories in precast architectural concrete units to receive windows, cramps, dowels, reglets, waterstops, flashings, and other similar work as indicated.

D. Cast-in openings larger than 10 inches (250 mm) in any dimension.

E. Reinforcement: Comply with recommendations in CRSI's "Manual of Standard Practice" and PCI MNL 117 for fabricating, placing, and supporting reinforcement.
   1. Clean reinforcement of loose rust and mill scale, earth, and other materials that reduce or destroy the bond with concrete.

2. Accurately position, support, and secure reinforcement against displacement during concrete-placement and consolidation operations. Completely conceal support devices to prevent exposure on finished surfaces.
3. Place reinforcement to maintain at least 3/4-inch (19-mm) minimum coverage. Arrange, space, and securely tie bars and bar supports to hold reinforcement in position while placing concrete. Direct wire tie ends away from finished, exposed concrete surfaces.
4. Install welded wire fabric in lengths as long as practicable. Lap adjoining pieces at least one full mesh and lace splices with wire. Offset laps of adjoining widths to prevent continuous laps in either direction.

F. Reinforce precast architectural concrete units to resist handling, transportation, and erection stresses.

G. Prestress tendons for precast architectural concrete units by either pretensioning or posttensioning methods. Comply with PCI MNL 117.
1. Delay detensioning or posttensioning of precast, prestressed architectural concrete units until concrete has reached its indicated minimum design release compressive strength as established by test cylinders cured under the same conditions as concrete.

H. Mix concrete according to PCI MNL 117 and requirements in this Section. After concrete batching, no additional water may be added.

I. Place face mix to a minimum thickness after consolidation of the greater of 1 inch (25 mm) or 1.5 times the maximum aggregate size, but not less than the minimum reinforcing cover.

J. Place concrete in a continuous operation to prevent seams or planes of weakness from forming in precast concrete units. Comply with requirements in PCI MNL 117 for measuring, mixing, transporting, and placing concrete.
1. Place backup concrete to ensure bond with face mix concrete.

K. Thoroughly consolidate placed concrete by internal and external vibration without dislocating or damaging reinforcement and built-in items. Use equipment and procedures complying with PCI MNL 117.

L. Comply with ACI 306.1 procedures for cold-weather concrete placement.

M. Comply with ACI 305R recommendations for hot-weather concrete placement.

N. Identify pickup points of precast architectural concrete units and orientation in structure with permanent markings, complying with markings indicated on Shop Drawings. Imprint or permanently mark casting date on each precast architectural concrete unit on a surface that will not show in finished structure.

O. Cure concrete, according to requirements in PCI MNL 117, by moisture retention without heat or by accelerated heat curing using low-pressure live steam or radiant heat and moisture.

P. Discard precast architectural concrete units that are warped, cracked, broken, spalled, stained, or otherwise defective unless repairs are approved by Architect.

2.11 FABRICATION TOLERANCES

A. Fabricate precast architectural concrete units straight and true to size and shape with exposed edges and corners precise and true so each finished panel complies with PCI MNL 117 product tolerances as well as position tolerances for cast-in items.

B. Fabricate precast architectural concrete units straight and true to size and shape with exposed edges and corners precise and true so each finished panel complies with the following product tolerances:
   1. Overall Height and Width of Units, Measured at the Face Exposed to View: As follows:
      a. 10 feet (3 m) or under, plus or minus 1/8 inch (3 mm).
      b. 10 to 20 feet (3 to 6 m), plus 1/8 inch (3 mm), minus 3/16 inch (5 mm).
      c. 20 to 40 feet (6 to 12 m), plus or minus 1/4 inch (6 mm).
      d. Each additional 10 feet (3 m), plus or minus 1/16 inch (1.5 mm).
   2. Overall Height and Width of Units, Measured at the Face Not Exposed to View: As follows:
      a. 10 feet (3 m) or under, plus or minus 1/4 inch (6 mm).
      b. 10 to 20 feet (3 to 6 m), plus 1/4 inch (6 mm), minus 3/8 inch (10 mm).
      c. 20 to 40 feet (6 to 12 m), plus or minus 3/8 inch (10 mm).
      d. Each additional 10 feet (3 m), plus or minus 1/8 inch (3 mm).
   3. Total Thickness or Flange Thickness: Plus 1/4 inch (6 mm), minus 1/8 inch (3 mm).
   4. Rib Thickness: Plus or minus 1/8 inch (3 mm).
   5. Rib to Edge of Flange: Plus or minus 1/8 inch (3 mm).
   6. Distance between Ribs: Plus or minus 1/8 inch (3 mm).
   7. Variation from Square or Designated Skew (Difference in Length of the Two Diagonal Measurements): Plus or minus 1/8 inch per 72 inches (3 mm per 2 m) or 1/2 inch (13 mm) total, whichever is greater.
   8. Length and Width of Block-outs and Openings within One Unit: Plus or minus 1/4 inch (6 mm).
   9. Location and Dimension of Block-outs Hidden from View and Used for HVAC and Utility Penetrations: Plus or minus 3/4 inch (19 mm).
   10. Dimensions of Haunches: Plus or minus 1/4 inch (6 mm).
   11. Haunch Bearing Surface Deviation from Specified Plane: Plus or minus 1/8 inch (3 mm).
   12. Difference in Relative Position of Adjacent Haunch Bearing Surfaces from Specified Relative Position: Plus or minus 1/4 inch (6 mm).
   13. Bowing: Plus or minus L/360, maximum 1 inch (25 mm).
   14. Local Smoothness: 1/4 inch per 10 feet (6 mm per 3 m).
   15. Variation between Adjacent Thin-Brick-Facing Products: 1/16 inch (2 mm).
   16. Warping: 1/16 inch per 12 inches (1.5 mm per 300 mm) of distance from the nearest adjacent corner.
   17. Tipping and Flushness of Plates: Plus or minus 1/4 inch (6 mm).
   18. Dimensions of Architectural Features and Rustications: Plus or minus 1/8 inch (3 mm).

C. Position Tolerances: For cast-in items measured from datum line location, as indicated on Shop Drawings.
   1. Weld Plates: Plus or minus 1 inch (25 mm).
   2. Inserts: Plus or minus 1/2 inch (13 mm).
   3. Handling Devices: Plus or minus 3 inches (75 mm).
   4. Reinforcing Steel and Welded Wire Fabric: Plus or minus 1/4 inch (6 mm) where position has structural implications or affects concrete cover; otherwise, plus or minus 1/2 inch (13 mm).
   5. Reinforcing Steel Extending out of Member: Plus or minus 1/2 inch (13 mm) of plan dimensions.
   6. Tendons: Plus or minus 1/4 inch (6 mm), vertical; plus or minus 1 inch (25 mm), horizontal.
   7. Location of Rustication Joints: Plus or minus 1/8 inch (3 mm).
   8. Location of Opening within Panel: Plus or minus 1/4 inch (6 mm).
   9. Flashing Reglets: Plus or minus 1/4 inch (6 mm).
   10. Flashing Reglets at Edge of Panel: Plus or minus 1/8 inch (3 mm).
   11. Reglets for Glazing Gaskets: Plus or minus 1/8 inch (3 mm).
   12. Electrical Outlets, Hose Bibs: Plus or minus 1/2 inch (13 mm).
   13. Haunches: Plus or minus 1/4 inch (6 mm).
   14. Allowable Rotation of Plate, Channel Inserts, Electrical Boxes: 2-degree rotation or 1/4 inch (6 mm) maximum over the full dimension of the unit.

2.12 FINISHES

A. Finish exposed-face surfaces of precast architectural concrete units to match approved design reference sample and as follows:
   1. PCI and APA's "Architectural Precast Concrete--Color and Texture Selection Guide," of plate numbers indicated.
      a. Plate number 157 AE-L.
   2. Smooth-Surface Finish: Provide surfaces free of pockets, sand streaks, and honeycombs, with uniform color and texture.
   3. Textured-Surface Finish: Impart by form liners or inserts to provide surfaces free of pockets, streaks, and honeycombs, with uniform color and texture.
   4. Bushhammer Finish: Use power or hand tools to remove matrix and fracture coarse aggregates.
   5. Retarded Finish: Use chemical retarding agents applied to concrete forms and washing and brushing procedures to expose aggregate and surrounding matrix surfaces after form removal.
   6. Abrasive-Blast Finish: Use abrasive grit, equipment, application techniques, and cleaning procedures to expose aggregate and surrounding matrix surfaces.
   7. Acid-Etched Finish: Use acid and hot-water solution, equipment, application techniques, and cleaning procedures to expose aggregate and surrounding matrix surfaces.
   8. Honed Finish: Use continuous mechanical abrasion with fine grit, followed by filling and rubbing procedures.
   9. Polished Finish: Use continuous mechanical abrasion with fine grit, followed by filling and rubbing procedures.
   10. Sand-Embedment Finish: Use selected stones placed in a sand bed in bottom of mold, with sand removed after curing.

B. Finish exposed top and bottom surfaces of precast architectural concrete units to match face-surface finish.

C. Finish exposed back surfaces of precast architectural concrete units by smooth, steel-trowel finish.

D. Finish unexposed surfaces of precast architectural concrete units by float finish.

2.13 SOURCE QUALITY CONTROL

A. The Contractor will employ an independent testing agency to evaluate precast architectural concrete fabricator's quality-control and testing methods.
   1. Allow testing agency access to material storage areas, concrete production equipment, concrete placement, and curing facilities. Cooperate with testing agency and provide samples of materials and concrete mixes as may be requested for additional testing and evaluation.

B. Quality-Control Testing: Test and inspect precast concrete according to PCI MNL 117 requirements.

C. Strength of precast concrete units will be considered deficient if units fail to comply with ACI 318 (ACI 318M) requirements.

D. Testing: If there is evidence that the strength of precast concrete units may be deficient or may not comply with ACI 318 (ACI 318M) requirements, the Contractor will employ an independent testing agency to obtain, prepare, and test cores drilled from hardened concrete to determine compressive strength according to ASTM C 42.
   1. A minimum of three representative cores will be taken from units of suspect strength, from locations directed by Architect.
   2. Cores will be tested in an air-dry condition.
   3. Strength of concrete for each series of 3 cores will be considered satisfactory if the average compressive strength is equal to at least 85 percent of the 28-day design compressive strength and no single core is less than 75 percent of the 28-day design compressive strength.
   4. Test results will be made in writing on the same day that tests are performed, with copies to Architect, Contractor, and precast concrete fabricator. Test reports will include the following:
      a. Project identification name and number.
      b. Date when tests were performed.
      c. Name of precast concrete fabricator.
      d. Name of concrete testing agency.
      e. Identification letter, name, and type of precast concrete unit or units represented by core tests; design compressive strength; type of break; compressive strength at breaks, corrected for length- diameter ratio; and direction of applied load to core in relation to horizontal plane of concrete as placed.

E. Patching: If core test results are satisfactory and precast concrete units comply with requirements, clean and dampen core holes and solidly fill with precast concrete mix that has no coarse aggregate, and finish to match adjacent precast concrete surfaces.

F. Defective Work: Precast architectural concrete units that do not comply with requirements, including strength, manufacturing tolerances, and finishes, are unacceptable. Replace with precast concrete units that comply with requirements.

PART 3 - EXECUTION

3.1 EXAMINATION

A. Examine substrates and conditions for compliance with requirements for installation tolerances, true and level bearing surfaces, and other conditions affecting performance. Proceed with installation only after unsatisfactory conditions have been corrected.

B. Do not install precast concrete units until supporting concrete has attained minimum design compressive strength.

3.2 INSTALLATION

A. Install clips, hangers, and other accessories required for connecting precast architectural concrete units to supporting members and backup materials.

B. Install precast architectural concrete. Provide temporary supports and bracing as required to maintain position, stability, and alignment as units are being permanently connected.
   1. Install bearing pads as precast concrete units are being erected.
   2. Maintain horizontal and vertical joint alignment and uniform joint width as erection progresses.
   3. Remove projecting hoisting devices and use sand-cement grout to fill voids within recessed hoisting devices flush with surface of concrete.

C. Anchor precast architectural concrete units in position by bolting, welding, grouting, or as otherwise indicated. Remove temporary shims, wedges, and spacers as soon as possible after anchoring and grouting are completed.

D. Welding: Perform welding in compliance with AWS D1.1 and AWS D1.4, with qualified welders.
   1. Protect precast architectural concrete units and bearing pads from damage by field welding or cutting operations and provide noncombustible shields as required.
   2. Repair damaged steel surfaces by cleaning and applying a coat of galvanizing repair paint to galvanized surfaces.
   3. Repair damaged steel surfaces by cleaning and repriming damaged painted surfaces.

E. At bolted connections, use lock washers or other acceptable means to prevent loosening of nuts.

F. Grouting Connections: Grout connections where required or indicated. Retain grout in place until hard enough to support itself. Pack spaces with stiff grout material, tamping until voids are completely filled. Place grout to finish smooth, level, and plumb with adjacent concrete surfaces. Keep grouted joints damp for not less than 24 hours after initial set. Promptly remove grout material from exposed surfaces before it affects finishes or hardens.

3.3 ERECTION TOLERANCES

A. Install precast architectural concrete units level, plumb, square, true, and in alignment without exceeding the noncumulative erection tolerances of PCI MNL 117, Appendix I.

B. Install precast architectural concrete units level, plumb, square, and true, without exceeding the following noncumulative erection tolerances.
   1. Plan Location from Building Grid Datum: Plus or minus 1/2 inch (13 mm).
   2. Plan Location from Centerline of Steel: Plus or minus 1/2 inch (13 mm).
   3. Top Elevation from Nominal Top Elevation: As follows:
      a. Exposed Individual Panel: Plus or minus 1/4 inch (6 mm).
      b. Nonexposed Individual Panel: Plus or minus 1/2 inch (13 mm).
      c. Exposed Panel Relative to Adjacent Panel: 1/4 inch (6 mm).
      d. Nonexposed Panel Relative to Adjacent Panel: 1/2 inch (13 mm).
   4. Support Elevation from Nominal Support Elevation: As follows:
      a. Maximum Low: 1/2 inch (13 mm).
      b. Maximum High: 1/4 inch (6 mm).
   5. Maximum Plumb Variation over the Lesser of Height of Structure or 100 Feet (30 m): 1 inch (25 mm).
   6. Plumb in Any 10 Feet (3 m) of Element Height: 1/4 inch (6 mm).
   7. Maximum Jog in Alignment of Matching Edges: 1/4 inch (6 mm).
   8. Joint Width (Governs over Joint Taper): Plus or minus 1/4 inch (6 mm).
   9. Maximum Joint Taper: 3/8 inch (10 mm).
   10. Joint Taper in 10 Feet (3 m): 1/4 inch (6 mm).
   11. Maximum Jog in Alignment of Matching Faces: 1/4 inch (6 mm).
   12. Differential Bowing or Camber, as Erected, between Adjacent Members of Same Design: 1/4 inch (6 mm).

3.4 FIELD QUALITY CONTROL

A. Testing: Owner will engage a qualified independent testing and inspecting agency to perform field tests and inspections.

B. Field welds and connections using high-strength bolts will be subject to tests and inspections.

C. Testing agency will report test results promptly and in writing to Contractor and Architect.

D. Remove and replace work that does not comply with specified requirements.

E. Additional testing and inspecting, at Contractor's expense, will be performed to determine compliance of corrected work with specified requirements.

3.5 REPAIRS

A. Repair exposed exterior surfaces of precast architectural concrete units to match color, texture, and uniformity of surrounding precast architectural concrete if permitted by Architect.

B. Remove and replace damaged precast architectural concrete units if repairs do not comply with requirements.

3.6 CLEANING

A. Clean exposed surfaces of precast concrete units after erection to remove weld marks, other markings, dirt, and stains.
   1. Wash and rinse according to precast concrete fabricator's written recommendations. Protect other work from staining or damage due to cleaning operations.
   2. Do not use cleaning materials or processes that could change the appearance of exposed concrete finishes.

END OF SECTION 034500

SECTION 042000 - UNIT MASONRY ASSEMBLIES

PART 1 - GENERAL

1.1 RELATED DOCUMENTS

A. Drawings and general provisions of the Contract, including General and Supplementary Conditions and Division 1 Specification Sections, apply to this Section.

1.2 SUMMARY

A. This Section includes unit masonry assemblies consisting of the following:

1. Concrete masonry units.
2. Face brick.
3. Mortar and grout.
4. Reinforcing steel.
5. Masonry joint reinforcement.
6. Ties and anchors.
7. Embedded flashing.

1.3 DEFINITIONS

A. Reinforced Masonry: Masonry containing reinforcing steel in grouted cells.

1.4 SUBMITTALS

A. Product Data: For each different masonry unit, accessory, and other manufactured product specified.

B. Samples for Verification: For the following:

1. Full-size units for each different exposed masonry unit required, showing the full range of exposed colors, textures, and dimensions to be expected in the completed construction.
2. Accessories embedded in the masonry.

1.5 QUALITY ASSURANCE

A. Source Limitations for Masonry Units: Obtain exposed masonry units of a uniform texture and color, or a uniform blend within the ranges accepted for these characteristics, through one source from a single manufacturer for each product required.

B. Source Limitations for Mortar Materials: Obtain mortar ingredients of a uniform quality, including color for exposed masonry, from one manufacturer for each cementitious component and from one source or producer for each aggregate.

C. Fire-Resistance Ratings: Where indicated, provide materials and construction identical to those of assemblies with fire-resistance ratings determined per ASTM E 119 by a testing and inspecting agency, by equivalent concrete masonry thickness, or by another means, as acceptable to authorities having jurisdiction.

D. Mockups: Before installing unit masonry, build mockups to verify selections made under sample Submittals and to demonstrate aesthetic effects and qualities of materials and

execution. Build mockups to comply with the following requirements, using materials indicated for the completed Work:

1. Locate mockups in the locations indicated or, if not indicated, as directed by Architect.
2. Build mockups for the following types of masonry, including face and backup wythes and accessories. Exterior wall mock up shall be complete mockup showing entire wall system (i.e. masonry ties, water proofing, and insulation board) and shall be 12' long by 12' high. Mockup shall also include the aluminum window system and sealant joints. Other requirements of mockups include:

    a. Typical exterior wall shall include decorative concrete units and face brick.
    b. Typical exterior wall with through-wall flashing installed for length of mockup.
    c. Typical interior unit masonry wall.

3. Maintain mockups during construction in an undisturbed condition as a standard for judging the completed Work.
4. Approval of mockups is for color, texture, and blending of masonry units; relationship of mortar and sealant colors to masonry unit colors; tooling of joints; and aesthetic qualities of workmanship.
5. Approved mockups of interior wall can be used in final construction.

1.6 DELIVERY, STORAGE, AND HANDLING

A. Store masonry units on elevated platforms in a dry location. If units are not stored in an enclosed location, cover tops and sides of stacks with waterproof sheeting, securely tied. If units become wet, do not install until they are dry.

B. Store cementitious materials on elevated platforms, under cover, and in a dry location. Do not use cementitious materials that have become damp.

C. Store aggregates where grading and other required characteristics can be maintained and contamination avoided.

D. Store masonry accessories, including metal items, to prevent corrosion and accumulation of dirt and oil.

1.7 PROJECT CONDITIONS

A. Protection of Masonry: During construction, cover tops of walls, projections, and sills with waterproof sheeting at end of each day's work. Cover partially completed masonry when construction is not in progress.

1. Extend cover a minimum of 24 inches (600 mm) down both sides and hold cover securely in place.

2. Where one wythe of multi-wythe masonry walls is complete in advance of other wythe, secure cover a minimum of 24 " down face next to unconstructed wythe and hold cover in place.

B. Do not apply uniform floor or roof loads for at least 12 hours and concentrated loads for at least 3 days after building masonry walls or columns.

C. Stain Prevention: Prevent grout, mortar, and soil from staining the face of masonry to be left exposed or painted. Immediately remove grout, mortar, and soil that come in contact with such masonry.

D. Cold-Weather Requirements: Do not use frozen materials or materials mixed or coated with ice or frost. Do not build on frozen substrates. Remove and replace unit masonry damaged by frost or by freezing conditions. Comply with cold-weather construction requirements contained in ACI 530.1/ASCE 6/TMS 602.

1. Cold-Weather Cleaning: Use liquid cleaning methods only when air temperature is 40 deg F (4 deg C) and above and will remain so until masonry has dried, but not less than 7 days after completing cleaning.

E. Hot-Weather Requirements: Protect unit masonry work when temperature and humidity conditions produce excessive evaporation of water from mortar and grout. Provide artificial shade and wind breaks and use cooled materials as required.

1. When ambient temperature exceeds 100 deg F (38 deg C), or 90 deg F (32 deg C) with a wind velocity greater than 8 mph (13 km/h), do not spread mortar beds more than 48 inches (1200 mm) ahead of masonry. Set masonry units within one minute of spreading mortar.

PART 2 - PRODUCTS

2.1 CONCRETE MASONRY UNITS

A. General: Provide shapes indicated and as follows:

1. Provide special shapes for lintels, corners, jambs, sash, control joints, headers, bonding, and other special conditions.

2. Provide bullnose units for outside corners (at interior partitions only), unless other wise noted.

B. Concrete Masonry Units: ASTM C 90 and as follows:

1. Weight Classification: Light weight , unless otherwise indicated
2. Provide Type II, nonmoisture-controlled units.
3. Size (Width): Manufactured to the following dimensions:

a. 4 inches (102 mm) nominal; 3-5/8 inches (92 mm) actual.
b. 8 inches (203 mm) nominal; 7-5/8 inches (194 mm) actual.

4. Exposed Faces: Manufacturer's standard color and texture, unless otherwise indicated.

2.2 BRICK

A. General: Provide shapes indicated and as follows for each form of brick required:

1. Provide units without cores or frogs and with exposed surfaces finished for ends of sills and caps and for similar applications that would otherwise expose unfinished brick surfaces.

B. Provide special shapes for applications requiring brick of size, form, color, and texture on exposed surfaces that cannot be produced by sawing.

1. Provide special shapes for applications where stretcher units cannot accommodate special conditions, including those at corners, movement joints, bond beams, sashes, and lintels.

C. Face Brick: ASTM C 216, Grade SW, Type FBS, and as follows:

1. Initial Rate of Absorption: Less than 20 g/30 sq. in. (20 g/194 sq. cm) per minute when tested per ASTM C 67.
2. Efflorescence: Provide brick that has been tested according to ASTM C 67 and is rated "not effloresced."
3. Size: Manufactured to the following actual dimensions:
    a. Modular: 3-1/2 to 3-5/8 inches (89 to 92 mm) wide by 2-1/4 inches (57 mm) high by 7-1/2 to 7-5/8 inches (190 to 194 mm) long.
4. Application: Use where brick is exposed, unless otherwise indicated.
5. Color and Texture: Match color and texture of Basis of Design
6. Products: Subject to compliance with requirements, provide one of the following:
    a. Basis of Design – Acme Brick – French Vanilla Lt – Modular Rough - #777427
    b. Cherokee Brick – Oatmeal – Vertex / Vertical Scratch Texture - Modular

2.3 MORTAR AND GROUT MATERIALS

A. Portland Cement: ASTM C 150, Type I or II, except Type III may be used for cold-weather construction. Provide natural color or white cement as required to produce mortar color indicated.

B. Hydrated Lime: ASTM C 207, Type S.

C. Portland Cement-Lime Mix: Packaged blend of portland cement complying with ASTM C 150, Type I or Type III, and hydrated lime complying with ASTM C 207.

D. Mortar Cement: ASTM C 1329.

E. Aggregate for Mortar: ASTM C 144; except for joints less than 1/4 inch (6.5 mm) thick, use aggregate graded with 100 percent passing the No. 16 (1.18-mm) sieve.

F. Aggregate for Grout: ASTM C 404.

G. Water-Repellent Admixture: Liquid water-repellent mortar admixture intended for use with concrete masonry units, containing integral water repellent by same manufacturer.

H. Water: Potable.

I. Available Products: Subject to compliance with requirements, products that may be incorporated into the Work include, but are not limited to, the following:

1. Mortar Cement:
    a. Magnolia Superbond Mortar Cement; Blue Circle Cement.
    b. Argos Mortar Cement; Lafarge Corporation.
2. Water-Repellent Admixture:
    a. Mortar Tite; Addiment Inc.
    b. Dry-Block Mortar Admixture; W. R. Grace & Co., Construction Products Division.
    c. Rheopel; Master Builders.

2.4 REINFORCING STEEL

A. Uncoated Steel Reinforcing Bars: ASTM A 615/A 615M; ASTM A 616/A 616M, including Supplement 1; or ASTM A 617/A 617M, Grade 60 (Grade 400).

2.5 MASONRY JOINT REINFORCEMENT

A. General: ASTM A 951 and as follows:

1. Hot-dip galvanized, carbon-steel wire for both interior and exterior walls.
2. Wire Size for Side Rods: W2.8 or 0.188-inch (4.8-mm) diameter.
3. Wire Size for Cross Rods: W2.8 or 0.188-inch (4.8-mm) diameter.
4. Provide in lengths of not less than 10 feet (3 m), with prefabricated corner and tee units where indicated.

B. For single-wythe masonry, provide either ladder type with single pair of side rods and cross rods spaced not more than 16 inches (407 mm) o.c.

C. For multiwythe masonry, provide types as follows:

1. Adjustable (2-piece) type with single pair of side rods and cross ties spaced not more than 16 inches (407 mm) o.c. and with separate adjustable veneer ties engaging the cross ties. Cross ties are either U-shaped with eyes or rectangular. Space side rods for embedment within each face shell of backup wythe and size adjustable ties to extend at least halfway through outer wythe but with at least 5/8-inch (16-mm) cover on outside face. Use where facing wythe is of different material than backup wythe.

2.6 TIES AND ANCHORS, GENERAL

A. General: Provide ties and anchors, specified in subsequent articles, made from materials that comply with this Article, unless otherwise indicated.

B. Hot-Dip Galvanized Carbon-Steel Wire: ASTM A 82; with ASTM A 153, Class B-2 coating.

C. Steel Sheet, Galvanized after Fabrication: ASTM A 366/A 366M cold-rolled, carbon-steel sheet hot-dip galvanized after fabrication to comply with ASTM A 153.

2.7 BENT WIRE TIES

A. General: Rectangular units with closed ends and not less than 4 inches (100 mm) wide. Z-shaped ties with ends bent 90 degrees to provide hooks not less than 2 inches (50 mm) long may be used for masonry constructed from solid units or hollow units laid with cells horizontal.

B. Wire: Fabricate from 3/16-inch- (4.8-mm-) diameter, hot-dip galvanized steel wire.

2.8 ADJUSTABLE ANCHORS FOR CONNECTING TO STEEL FRAME

A. General: Provide two-piece assemblies that allow vertical or horizontal adjustment but resist tension and compression forces perpendicular to plane of wall.

1. Anchor Section: Crimped 1/4-inch- (6.4-mm-) diameter, hot-dip galvanized steel wire anchor section for welding to steel.

2. Tie Section: Triangular-shaped wire tie, sized to extend within 1 inch (25 mm) of masonry face, made from 0.1875-inch- (4.8-mm-) diameter, hot-dip galvanized steel stainless-steel wire.

2.9 ADJUSTABLE MASONRY-VENEER ANCHORS

A. General: Provide two-piece assemblies that allow vertical or horizontal adjustment but resist tension and compression forces perpendicular to plane of wall, for attachment over sheathing to metal studs through continuous rigid insulation, and as follows:

1. Structural Performance Characteristics: Capable of withstanding a 100-lbf (445-N) load in both tension and compression without deforming or developing play in excess of 0.05 inch (1.3 mm).

B. Screw-Attached, Masonry-Veneer Anchors: Units consisting of a wire tie section and a metal anchor section complying with the following requirements:

1. Anchor Section: Sheet metal plate with screw holes top and bottom and with raised rib-stiffened strap stamped into center to provide a slot between strap and plate for connection of wire tie.

a. Plate 1-1/4 inches (32 mm) wide by 6 inches (150 mm) long with strap 5/8 inch (16 mm) wide by 3-5/8 inches (92 mm) long; slot clearance formed between face of plate and back of strap shall not exceed diameter of wire tie by more than 1/32 inch (0.8 mm).

2. Wire Tie Section: Rectangular shaped wire tie sized to extend at least halfway through veneer but with at least 5/8-inch (16-mm) cover on outside face.
3. Fabricate sheet metal anchor sections and other sheet metal parts from 0.0677-inch- (1.7-mm-) thick, steel sheet, galvanized after fabrication.
4. Fabricate wire tie sections from 0.1875-inch- (4.8-mm-) diameter, hot-dip galvanized steel wire.

C. Steel Drill Screws for Steel Studs: ASTM C 954 except manufactured with hex washer head and neoprene washer, No. 10 (4.8-mm) diameter by length required to penetrate steel stud flange by not less than 3 exposed threads, and with the following corrosion protective coating:

1. Organic polymer coating with salt-spray resistance to red rust of more than 800 hours per ASTM B 117.

D. Stainless-Steel Drill Screws for Steel Studs: Proprietary fastener consisting of carbon-steel drill point and 300 Series stainless-steel shank, complying with ASTM C 954 except manufactured with hex washer head and neoprene washer, No. 10 (4.8-mm) diameter by length required to penetrate steel stud flange by not less than three exposed threads.

E. Available Products: Subject to compliance with requirements, products that may be incorporated into the Work include, but are not limited to, the following:

1. Screw-Attached, Masonry-Veneer Anchors:

a. X-Seal Anchor; Hohmann & Barnard, Inc.

b. Equal by Heckmann Building Products, Inc.

2. Stainless-Steel Drill Screws for Steel Studs:

a. By manufacturer of anchor.

2.10 EMBEDDED FLASHING MATERIALS

A. Contractor's Option for Concealed Flashing: For flashing partly exposed to the exterior, use metal flashing specified above. For flashing not exposed to the exterior, use one of the following, unless otherwise indicated:

1. Copper-Laminated Flashing: Manufacturer's standard laminated flashing consisting of 5-oz./sq. ft. (1.5-kg/sq. m) sheet copper bonded with asphalt between 2 layers of glass-fiber cloth. Use only where flashing is fully concealed in masonry.
2. Asphalt-Coated Copper Flashing: Manufacturer's standard product consisting of 5-oz./sq. ft. (1.5-kg/sq. m) sheet copper coated with flexible asphalt. Use only where flashing is fully concealed in masonry.

B. Adhesives, Primers, and Seam Tapes for Flashings: Flashing manufacturer's standard products or products recommended by the flashing manufacturer for bonding flashing sheets to each other and to substrates.

C. Products: Subject to compliance with requirements, products that may be incorporated into the Work include the following:

1. Copper-Laminated Flashing:

a. Copper Fabric; AFCO Products, Inc.
b. H & B C-Fab Flashing; Hohmann & Barnard, Inc.
c. Copper Fabric Flashing; Polytite Manufacturing Corp.
d. York Copper Fabric Flashing; York Manufacturing, Inc.

2. Asphalt-Coated Copper Flashing:

a. Cop-A-Cote; AFCO Products, Inc.
b. H & B C-Coat Flashing; Hohmann & Barnard, Inc.
c. Coated Copper Flashing; Polytite Manufacturing Corp.
d. Copperseal; York Manufacturing, Inc.

2.11 MORTAR AND GROUT MIXES

A. General: Do not use admixtures, including pigments, air-entraining agents, accelerators, retarders, water-repellent agents, antifreeze compounds, or other admixtures, unless otherwise indicated.

1. Do not use calcium chloride in mortar or grout.

B. Mortar for Unit Masonry: Comply with ASTM C 270, Property Specification.

1. Limit cementitious materials in mortar to portland cement, mortar cement, and lime.
2. For reinforced masonry and where indicated, use Type S.
3. For exterior, above-grade, load-bearing and non-load-bearing walls and parapet walls; for interior load-bearing walls; for interior non-load-bearing partitions; and for other applications where another type is not indicated, use Type N.

C. Grout for Unit Masonry: Comply with [ASTM C 476].

1. Use grout of type indicated or, if not otherwise indicated, of type (fine or coarse) that will comply with Table 5 of ACI 530.1/ASCE 6/TMS 602 for dimensions of grout spaces and pour height.
2. Provide grout with a slump of 8 to 11 inches (200 to 280 mm) as measured according to ASTM C 143.

PART 3 - EXECUTION

3.1 EXAMINATION

A. Examine conditions, with Installer present, for compliance with requirements for installation tolerances and other conditions affecting performance.

1. Verify that foundations are within tolerances specified.
2. Proceed with installation only after unsatisfactory conditions have been corrected.

B. Before installation, examine rough-in and built-in construction to verify actual locations of piping connections.

3.2 INSTALLATION, GENERAL

A. Thickness: Build cavity and composite walls and other masonry construction to the full thickness shown. Build single-wythe walls to the actual widths of masonry units, using units of widths indicated.

B. Build chases and recesses to accommodate items specified in this Section and in other Sections of the Specifications.

C. Leave openings for equipment to be installed before completing masonry. After installing equipment, complete masonry to match the construction immediately adjacent to the opening.

D. Cut masonry units with motor-driven saws to provide clean, sharp, unchipped edges. Cut units as required to provide a continuous pattern and to fit adjoining construction. Where possible, use full-size units without cutting. Allow units cut with water-cooled saws to dry before placing, unless wetting of units is specified. Install cut units with cut surfaces and, where possible, cut edges concealed.

E. Select and arrange units for exposed unit masonry to produce a uniform blend of colors and textures.

1. Mix units from several pallets or cubes as they are placed.

F. Wetting of Brick: Wet brick before laying if the initial rate of absorption exceeds 30 g/30 sq. in. (30 g/194 sq. cm) per minute when tested per ASTM C 67. Allow units to absorb water so they are damp but not wet at the time of laying.

3.3 CONSTRUCTION TOLERANCES

A. Comply with tolerances in ACI 530.1/ASCE 6/TMS 602 and the following:

B. For conspicuous vertical lines, such as external corners, door jambs, reveals, and expansion and control joints, do not vary from plumb by more than 1/4 inch in 20 feet (6 mm in 6 m), nor 1/2 inch (12 mm) maximum.

C. For vertical alignment of exposed head joints, do not vary from plumb by more than 1/4 inch in 10 feet (6 mm in 3 m), nor 1/2 inch (12 mm) maximum.

D. For conspicuous horizontal lines, such as exposed lintels, sills, parapets, and reveals, do not vary from level by more than 1/4 inch in 20 feet (6 mm in 6 m), nor 1/2 inch (12 mm) maximum.

E. For exposed bed joints, do not vary from thickness indicated by more than plus or minus 1/8 inch (3 mm), with a maximum thickness limited to 1/2 inch (12 mm). Do not vary from bed-joint thickness of adjacent courses by more than 1/8 inch (3 mm).

F. For exposed head joints, do not vary from thickness indicated by more than plus or minus 1/8 inch (3 mm). Do not vary from adjacent bed-joint and head-joint thicknesses by more than 1/8 inch (3 mm).

3.4 LAYING MASONRY WALLS

A. Lay out walls in advance for accurate spacing of surface bond patterns with uniform joint thicknesses and for accurate location of openings, movement-type joints, returns, and offsets. Avoid using less-than-half-size units, particularly at corners, jambs, and, where possible, at other locations.

B. Bond Pattern for Exposed Masonry: Lay exposed masonry in the following bond pattern; do not use units with less than nominal 4-inch (100-mm) horizontal face dimensions at corners or jambs.

1. One-half running bond with vertical joints in each course centered on units in course above and below, unless otherwise noted.

C. Lay concealed masonry with all units in a wythe in running bond or bonded by lapping not less than 2 inches (50 mm). Bond and interlock each course of each wythe at corners. Do not use units with less than nominal 4-inch (100-mm) horizontal face dimensions at corners or jambs.

D. Stopping and Resuming Work: In each course, rack back one-half-unit length for one-half running bond or one-third-unit length for one-third running bond; do not tooth. Clean exposed surfaces of set masonry, wet clay masonry units lightly if required, and remove loose masonry units and mortar before laying fresh masonry.

E. Built-in Work: As construction progresses, build in items specified under this and other Sections of the Specifications. Fill in solidly with masonry around built-in items.

F. Fill space between hollow-metal frames and masonry solidly with mortar, unless otherwise indicated.

G. Where built-in items are to be embedded in cores of hollow masonry units, place a layer of metal lath in the joint below and rod mortar or grout into core.

H. Fill cores in hollow concrete masonry units with grout 24 inches (600 mm) under bearing plates, beams, lintels, posts, and similar items, unless otherwise indicated.

I. Build non-load-bearing interior partitions full height of story to underside of roof structure above. At metal deck roof structure, utilize one of the following:

1. Install compressible filler in joint between top of partition and underside of structure above.
2. At fire-rated partitions, install firestopping in joint between top of partition and underside of structure above to comply with Division 7 Section "Firestopping."

3.5 MORTAR BEDDING AND JOINTING

A. Lay hollow masonry units as follows:

1. With full mortar coverage on horizontal and vertical face shells.
2. Bed webs in mortar in starting course on footings and in all courses of piers, columns, and pilasters, and where adjacent to cells or cavities to be filled with grout.
3. For starting course on footings where cells are not grouted, spread out full mortar bed, including areas under cells.

B. Lay solid brick-size masonry units with completely filled bed and head joints; butter ends with sufficient mortar to fill head joints and shove into place. Do not deeply furrow bed joints or slush head joints.

1. At cavity walls, bevel beds away from cavity, to minimize mortar protrusions into cavity. As work progresses, trowel mortar fins protruding into cavity flat against the cavity face of the brick.

C. Tool exposed joints slightly concave when thumbprint hard, using a jointer larger than the joint thickness, unless otherwise indicated.

D. Cut joints flush for masonry walls to receive plaster or other direct-applied finishes (other than paint), unless otherwise indicated.

3.6 CAVITIES

A. Keep cavities clean of mortar droppings and other materials during construction. Strike joints facing cavities flush.

1. Use wood strips temporarily placed in cavity to collect mortar droppings. As work progresses, remove strips, clean off mortar droppings, and replace in cavity.

B. Coat cavity face of backup wythe to comply with Division 7 Section "fluid applied air barrier".

3.7 MASONRY JOINT REINFORCEMENT

A. General: Provide continuous masonry joint reinforcement as indicated. Install entire length of longitudinal side rods in mortar with a minimum cover of 5/8 inch (16 mm) on exterior side of walls, 1/2 inch (13 mm) elsewhere. Lap reinforcement a minimum of 6 inches (150 mm).

1. Space reinforcement not more than 16 inches (406 mm) o.c.

2. In addition to continuous reinforcement, provide reinforcement not more than 8" above and below wall openings and extending 12" beyond openings.

B. Cut or interrupt joint reinforcement at control and expansion joints, unless otherwise indicated.

C. Provide continuity at corners and wall intersections by using prefabricated "L" and "T" sections. Cut and bend reinforcing units as directed by manufacturer for continuity at returns, offsets, column fireproofing, pipe enclosures, and other special conditions.

3.8 ANCHORING MASONRY TO STRUCTURAL MEMBERS

A. Anchor masonry to structural members where masonry abuts or faces structural members to comply with the following:

1. Provide an open space not less than 1 inch (25 mm) in width between masonry and structural member, unless otherwise indicated. Keep open space free of mortar or other rigid materials.

2. Anchor masonry to structural members with flexible anchors embedded in masonry joints and attached to structure.

3. Space anchors as indicated, but not more than 24 inches (610 mm) o.c. vertically and 36 inches (915 mm) o.c. horizontally.

3.9 ANCHORING MASONRY VENEERS

A. Anchor masonry veneers to concrete and masonry backup with masonry-veneer anchors to comply with the following requirements:

1. Embed connector sections and continuous wire in masonry joints. Provide not less than 2 inches (50 mm) of air space between back of masonry veneer and face of sheathing.
2. Locate anchor sections to allow maximum vertical differential movement of ties up and down.
3. Space anchors as indicated, but not more than 16 inches o.c. vertically and 16 inches o.c. horizontally with not less than 1 anchor for each 2.67 sq. ft. (0.25 sq. m) of wall area. Install additional anchors within 12 inches (305 mm) of openings and at intervals, not exceeding 36 inches (914 mm), around perimeter.

3.10 CONTROL AND EXPANSION JOINTS

A. *General: Install control and expansion joints in unit masonry where indicated, but not more than 30 feet on center. In addition, provide control joints in concrete masonry where concrete masonry walls bypass adjacent structural steel columns. Coordinate the location of control/expansion joints with Architect prior to beginning masonry installation. Build-in related items as masonry progresses. Do not form a continuous span through movement joints unless provisions are made to prevent in-plane restraint of wall or partition movement.*

B. Form control joints in concrete masonry as follows:

1. Install temporary foam-plastic filler in head joints and remove filler when unit masonry is complete. Form open joint of width indicated, but not less than 3/8 inch (10 mm) for installation of sealant and backer rod specified in Division 7 Section "Joint Sealants."

C. Form control/expansion joints in brick made from clay or shale as indicated on exterior elevations (maximum 30 feet on center) and as follows:

1. Form open joint of width indicated, but not less than 3/8 inch (10 mm) for installation of sealant and backer rod specified in Division 7 Section "Joint Sealants." Keep joint free and clear of mortar.

D. Build in horizontal, pressure-relieving joints where indicated; construct joints by either leaving an air space or inserting a compressible filler of width required for installing sealant and backer rod specified in Division 7 Section "Joint Sealants."

1. Locate horizontal, pressure-relieving joints beneath shelf angles supporting masonry veneer and attached to structure behind masonry veneer.

3.11 LINTELS

A. Install steel lintels where indicated.

B. Provide minimum bearing of 8 inches (200 mm) at each jamb, unless otherwise indicated.

C. Provide masonry lintels where shown and where openings of more than 12 inches (305 mm) for brick-size units and 24 inches (610 mm) for block-size units are shown without structural steel or other supporting lintels. Refer to structural drawings for additional information.

1. Provide prefabricated or built-in-place masonry lintels. Use specially formed bond beam units with reinforcing bars placed as indicated and filled with coarse grout. Cure precast lintels before handling and installing. Temporarily support built-in-place lintels until cured.

3.12 FLASHING, WEEP HOLES, AND VENTS

A. General: Install embedded flashing and weep holes in masonry at shelf angles, lintels, ledges, other obstructions to downward flow of water in wall, and where indicated.

B. Prepare masonry surfaces so they are smooth and free from projections that could puncture flashing. Unless otherwise indicated, place through-wall flashing on sloping bed of mortar and cover with mortar. Before covering with mortar, seal penetrations in flashing with adhesive, sealant, or tape as recommended by flashing manufacturer.

C. Install flashing as follows:

1. At masonry-veneer walls, extend flashing from exterior face of veneer, through veneer, up face of sheathing at least 8 inches (200 mm), and behind air-infiltration barrier or building paper.

2. At multiwythe masonry walls, including cavity walls, extend flashing from exterior face of outer wythe of masonry, through outer wythe, turned up a minimum of 8 inches and through inner wythe to within 1/2 inch (13 mm) of the interior face of the wall in exposed masonry. Where interior surface of inner wythe is concealed by furring, carry flashing completely through inner wythe and turn flashing up approximately 2 inches (50 mm), unless otherwise indicated.

3. At lintels and shelf angles, extend flashing a minimum of 4 inches (100 mm) into masonry at each end. At heads and sills, extend flashing 4 inches (100 mm) at ends and turn flashing up not less than 2 inches (50 mm) to form a pan.

4. Cut flashing off flush with face of wall after masonry wall construction is completed.

D. Install weep holes in the head joints in exterior wythes of the first course of masonry immediately above embedded flashing and as follows:

1. Use open head joint to form weep holes.

2. Space weep holes 24 inches (600 mm) o.c.

3. In cavities, place pea gravel to a height equal to height of first course, but not less than 2 inches (50 mm), immediately above top of flashing embedded in the wall, as masonry construction progresses, to splatter mortar droppings and to maintain drainage.

E. Install reglets and nailers for flashing and other related construction where they are shown to be built into masonry.

3.13 REINFORCED UNIT MASONRY INSTALLATION

A. Temporary Formwork and Shores: Construct formwork and shores to support reinforced masonry elements during construction.

1. Construct formwork to conform to shape, line, and dimensions shown. Make it sufficiently tight to prevent leakage of mortar and grout. Brace, tie, and support forms to maintain position and shape during construction and curing of reinforced masonry.
2. Do not remove forms and shores until reinforced masonry members have hardened sufficiently to carry their own weight and other temporary loads that may be placed on them during construction.

B. Placing Reinforcement: Comply with requirements of ACI 530.1/ASCE 6/TMS 602.

C. Grouting: Do not place grout until entire height of masonry to be grouted has attained sufficient strength to resist grout pressure.

1. Comply with requirements of ACI 530.1/ASCE 6/TMS 602 for cleanouts and for grout placement, including minimum grout space and maximum pour height.

3.14 FIELD QUALITY CONTROL

A. Owner will engage a qualified independent testing agency to perform field quality-control testing indicated below.

1. Payment for these services will be made by Owner.
2. Retesting of materials failing to meet specified requirements shall be done at Contractor's expense.

B. Mortar properties will be tested per [ASTM C 780].

C. Grout will be sampled and tested for compressive strength per [ASTM C 1019].

3.15 REPAIRING, POINTING, AND CLEANING

A. Remove and replace masonry units that are loose, chipped, broken, stained, or otherwise damaged or that do not match adjoining units. Install new units to match adjoining units; install in fresh mortar, pointed to eliminate evidence of replacement.

B. Pointing: During the tooling of joints, enlarge voids and holes, except weep holes, and completely fill with mortar. Point up joints, including corners, openings, and adjacent construction, to provide a neat, uniform appearance. Prepare joints for sealant application.

C. In-Progress Cleaning: Clean unit masonry as work progresses by dry brushing to remove mortar fins and smears before tooling joints.

D. Final Cleaning: After mortar is thoroughly set and cured, clean exposed masonry as follows:

1. Remove large mortar particles by hand with wooden paddles and nonmetallic scrape hoes or chisels.
2. Test cleaning methods on sample wall panel; leave one-half of panel uncleaned for comparison purposes. Obtain Architect's approval of sample cleaning before proceeding with cleaning of masonry.
3. Clean concrete masonry by cleaning method indicated in NCMA TEK 8-2 applicable to type of stain on exposed surfaces.
4. Properly and legally dispose of all waste.

END OF SECTION 042000

SECTION 051200 – STRUCTURAL STEEL FRAMING

PART 1 – GENERAL

1.1 DESCRIPTION

A. All work under this Section shall be performed entirely under one sub-contract, the scope of which shall include the production of shop drawings, the fabrication of all steel members and the erection of all structural and miscellaneous steel members.

B. Work is to include all structural steel framing members, support members, with required bracing welds, fasteners, base plates, bearing plates, anchor bolts, and miscellaneous structural steel items.

1.2 APPLICABLE STANDARDS

A. American Institute of Steel Construction
   1. AISC Manual of Steel Construction

B. American Society for Testing and Materials:
   1. ASTM A 36 for steel plates
   2. ASTM A992 Grade 50 for Hot-Rolled Shapes
   3. ASTM A233 Class E70XX series electrodes for manual arc welding and Grade SAW-1 submerged arc processed shall be used
   4. ASTM F1554 (Grade 36) for column anchor bolts
   5. ASTM A325 for high strength bolts
   6. ASTM C827 for non-shrink and non-metallic grout
   7. ASTM C191 for non-shrink and non-metallic grout
   8. ASTM A500, Grade B structural tubing
   9. ASTM A501 steel pipe

C. American Welding Society
   1. AWSD1.1 Steel stud shear connectors

D. The Society for Protective Coatings
   1. Specifications SSPC Paint 25

1.3 QUALITY ASSURANCE

A. A recognized testing laboratory approved by the Architect and Structural Engineer is to do the specified inspection and furnish to the Architect and Structural Engineer, reports of all inspections with complete summary of results. The Contractor shall coordinate all work required of the testing laboratory. Also see Section 01410 - TESTING LAB SERVICES.

B. The testing laboratory shall visually inspect all field welds and all bolted connections for compliance with the details shown on the Plans and the requirements of the AISC.

C. The testing laboratory shall use Ultrasonic Testing on 10% of all field welds.

D. The Owner reserves the right to employ an independent testing laboratory to gamma ray or magna-flux all welds. Any welds found to be inadequate shall be removed and replaced by the Contractor at no additional cost to the Owner.

E. Welds shall be made according to requirements of the American Welding Society. Welders shall be certified for this project as qualified structural welders according to the requirements of the American Welding Society by and independent testing laboratory approved by the Architect. Copies of current certificates for each field welder shall be furnished to the Architect.

F. Mill certificates for all structural steel are to be available to the Architect for his review.

1.4 SUBMITTALS

A. The fabricator shall furnish shop drawings as required by the contract documents showing all details necessary for erection and fabrication of his work to the Architect for his approval. Reproductions of the contract structural drawings for erection plans and details will not be permitted without the approval of the Engineer. Detailing shall be performed by experienced detailers. Erection plans, erection details, and detailing shall be clear and easily readable. If it is apparent to the Architect or Structural Engineer that the Contractor has not thoroughly checked the shop drawings prior to submittal, the Contractor will be notified to resubmit a set that has been properly checked, and the previous submittal will be abandoned. Only complete sets of shop drawings will be reviewed unless an agreement to check partial submittals is obtained prior to the first submittal. Do not fabricate any material until approval of the Architect has been obtained.

PART 2 – PRODUCTS

2.1 MATERIALS

A. Structural steel shall be new sections that conform to the current Specifications of ASTM A-992, Grade 50.

B. High strength bolts shall conform to ASTM Specification A325-N.

C. Welds shall be E70XX Series electrodes for manual arc welding and grade SAW-1 for submerged arc process.

D. All column anchor bolts shall be ASTM A325 (Group A).

E. All bolts not indicated otherwise on plans are ¾". All connections not noted otherwise on plans shall be framed connections.

F. Shear connectors shall be ¾" diameter x 4" headed studs conforming to the requirements of AWSD1.1.

G. Grout for base plates shall be precision, pre-mixed, non-shrink and non-metallic in conformance with ASTM C827. Grout shall be easily workable as well as being made flowable with an initial setting time of not less than 45 minutes and shall meet the requirements of ASTM C191. Grout shall have a 14 day compressive strength of 6000 psi when mixed to its flowable state.

H. All structural steel shall be shop painted, surfaces to be painted shall be prepared per the Society for Protective coatings SSPC-SP3 or better.

Paint shall be per SSPC Paint 25, Tnemec Primers Series 10 – 99 or approved equal.

Field painting of work under this heading is specified in Section 09900, Paints and Coatings.

Where sprayed on fire-proofing is specified steel shall not be primed unless required by the fire-proofing manufacturer. If primer is required for fire-proofed steel, it shall be suitable to the fireproofing manufacturer for proper adhesion.

I. Galvanizing:

Provide a zinc coating for those items shown or specified to be galvanized as follows:
1. ASTM A 153 for galvanizing iron and steel hardware.
2. ASTM A 123 for galvanizing rolled, pressed and forged steel shapes, plates, bars and strip 1/8" thick and heavier.
3. ASTM A 386 for galvanizing assembled steel products.
4. ASTM A 446, Grade 90 for sheet steel.

PART 3 – EXECUTION

3.1 FABRICATION

A. All workmanship shall be equal to the best practice in modern structural shops. As a minimum required all structural steel work shall conform to the specifications of "American Institute of Steel Construction" (AISC).

B. The fabricator shall design all simple wide flange beam connections to resist one half of the MAXIMUM TOTAL UNIFORM LOAD as provided in Table 3-6 of the AISC Steel Construction Manual.

C. Shop connections shall be welded. Field connections shall be bolted unless welded connections are indicated on plans. Welded connections shall be detailed consistent with requirements of the American Welding Society. Bolted connections shall be proportioned as shown in AISC Manual, using minimum 3/4" A325 high strength bolts unless shown otherwise on plans.

D. Shop and field welders shall have been recently certified as qualified structural welder according to requirements of the American Welding Society.

E. Any splices not shown on the drawings shall be indicated clearly on the shop drawings and shall be made only with the approval of the Architect and/or Engineer.

F. The general contractor is to verify the sizes and locations of all required floor and roof openings, equipment supports, etc. with the various subcontractors. Any conditions which require revisions or additions to the structural framing are to be brought to the attention of the Architect and Structural Engineer prior to any construction. Any cost for the required structural changes will be borne by the General Contractor.

G. Unless otherwise detailed on the Plans, the fabricator shall design the frames for floor openings for the appropriate live and dead loads plus the weight of any mechanical or electrical equipment, ducts, pipes, etc.

H. If a member size has been inadvertently omitted from the Plans, the fabricator shall contact the Structural Engineer for the required size prior to submittal of his bid proposal.

I. Erection marks shall be painted on all structural members.

J. Provide all necessary erection clips, angles, seats, etc., to properly erect structural steel.

K. Welding shall be in accordance with the requirements of the American Welding Society with all possible welding performed in the shop.

L. Provide one shop coat of paint to all structural members, connectors, angles, etc. Thickness shall be at least 1 mil dry film. All steel shall have been power wire brushed so as to remove all loose mill scale, rust, weld slag, etc., prior to painting.

M. Fabricator shall obtain written approval from the manufacturer or applicator or any specified sprayed-on-fire-proofing material that the paint to be used for the shop coat is suitable for the adhesion of the sprayed-on material and a copy of same shall be submitted to the Architect.

N. The Contractor shall make measurements in the field to verify or supplement dimensions shown on the drawings, and he shall be responsible for proper measurements and fit of all items.

O. Over masonry openings for windows, doors, ducts, grilles, louvers, recesses in masonry walls, and where indicated or required, provide structural steel angles, channels, and shapes to properly support adjacent work. Where loose lintel angles occur in pairs, they shall have bolts and separators.

P. For those galvanized items, apply a high zinc dust content paint for re-galvanizing welds in galvanized steel, complying to the Military Specification MIL-P-21035 (Ships).

3.2 ERECTION

A. Provide false work, temporary bracing, and all tools, machinery and appliances, necessary for the expeditious handling of the work. False work and temporary bracing shall be properly designed and substantially constructed and maintained for the loads which will come upon it and shall remain in place until all permanent bracing is in place.

B. Bolts shall be installed using a plain hardened steel washer fabricated in accordance with ASTM F436-11 under the turned element and shall be tightened as per the requirements of the AISC.

C. The structural system and the individual structural members are designed to be self supporting only after all structural members are connected in place.

D. Steel furnished shall be true and free of twists, bends, and open joints between components parts. Material shall be thoroughly straightened in the shop before being laid out or worked in any way.

E. Each piece or member shall be properly identified by a mark and direction of setting. Contractor shall check each piece of conformity to plans and dimensions to maintain proper location, alignment and level.

F. All members shall be set plumb and true to exact level, or slope if required, and checked by instrument. Grout base plates solidly with approved non-shrinking grout. Set bearing plates in mortar consisting of Portland Cement and sand.

G. After erection, nuts, bolt heads, and burs or abraded spot shall be spot painted with above mentioned paint.

H. Shear connectors are to be equally spaced, are to be welded through the deck to all interior beams, and may be welded directly to exterior beams.

END OF SECTION 051200

SECTION 052100 – STEEL JOISTS

PART 1 – GENERAL

1.1 DESCRIPTION

A. Open web steel joists, with bridging, attached bearing plates, angles, and anchors.

1.2 APPLICABLE STANDARDS

A. ASTM A307 Carbon Steel Threaded Standard Fasteners.

B. ASTM A325 High Strength Bolts for Structural Steel Joints.

C. AWS D1.1 Structural Welding Code.

D. SJI Standard Specifications for Open Web Steel Joists K-Series, and Standard Specifications for Long Span Steel Joists LH-Series and Deep Long Span Steel Joists DLH-Series.

E. Steel Structures Painting Council Specification.

1.3 QUALITY ASSURANCE

A. Conform to SJI Standard Specifications, Load Tables, and Weight Tables.

1.4 SUBMITTALS

A. The fabricator shall submit, before any fabrication, five (5) copies of shop drawings for the approval of the Architect. The shop drawings shall indicate standard designations, configuration, sizes, spacing, and locations of joists, joist coding, bridging, connections, attachments, cambers, and elevations.

1.5 PRODUCT HANDLING

A. Deliver, store and handle steel joist as recommended in SJI specifications. Handle and store joists in a manner to avoid deforming members and to avoid excessive stresses.

PART 2 – PRODUCTS

2.1 MATERIALS

A. Open Web Joist Members: SJI Type K and LH Open Web and SJI Type LH Open Web.

B. Anchor Bolts, Nuts and Washers: ASTM A325.

C. Primer: SSPC 15, Type 1 red oxide or equal.

2.2 FABRICATION

A. Fabricate steel joists in accordance with SJI Standard Specifications including headers and other supplementary framing.

B. Provide bottom and top joist chord extensions indicated.

C. Prepare and shop prime with one (1) coat of primer.

D. Camber Joist per SJI recommendations.

E. End bearing plates shall be shimmed to provide uniform bearing where sloping joists rest on top of beam flanges, and slope exceeds one-fourth inch per foot and is less than three-fourths inch per foot. Where slope exceeds three-fourths inch per foot, bearing plates shall be sloped.

F. The ends of steel joists shall extend a distance of not less than four (4) inches over masonry or poured concrete supports. The ends of joists shall extend not less than 2-1/2 inches over steel supports except where opposite joists butt over a narrow steel support. Positive attachment to the support is to be made by welding or bolting in accordance with the requirements of SJ1.

G. Top and bottom chord of joists shall be bridged with steel angles welded to the top of the bottom chord and to the bottom of the top chord of each joist. The alignment of the continuous bridging shall be straight and true as bridging butts into beam, wall, etc., and it shall be positively attached in an approved manner. Spacing of bridging shall be in accordance with Steel Joist Institute Specifications or as indicated on the drawings.

PART 3 – EXECUTION

3.1 ERECTION

A. Erect steel joists in accordance with SJI Standard Specifications.

B. Bear joists on supports in accordance with SJI.

C. During erection, provide temporary bracing for induced loads and stresses.

D. Coordinate placement of anchorages in masonry construction for securing to bearing member.

E. Field weld joist seat to placed bearing member after alignment.

F. Where bridging is not indicated on the plans it is to be provided in accordance with the requirements of the SJI.

G. Do not permit erection of decking until joists are braced and bridged.

H. Do not field cut or alter joists without approval of the Architect/Engineer.

I. After erection, prime welds, abrasions, and surfaces not primed. Use primer consistent with shop coat.

END OF SECTION 052100

SECTION 053123 – STEEL ROOF DECK

PART 1 – GENERAL

1.1 DESCRIPTION

A. Roof deck is to be galvanized steel Type "B" deck.

1.2 REFERENCES

A. AISI – Specification for the Design of Cold-Formed Steel Structural Members.

B. ASTM A36 – Structural Steel.

C. ASTM A525 – Steel Sheet, Zinc-Coated (Galvanized) by the Hot-Dip Process G60 Coating Class.

D. ASTM A446 – Steel, Cold-Rolled Sheet, Carbon, Structural.

E. AWS D1.1 – Structural Welding Code

F. SDI – Design Manual for Composite Decks, Form Decks, Roof Decks.

1.3 SUBMITTALS

A. The fabricator shall furnish and submit before any fabrication, five (5) copies of shop drawings (erection and fabrication) of his work for the approval of the Architect. One (1) copy of each sheet will be returned marked for corrections or as approved. Copies of approved drawings shall be furnished the job as needed, and one (1) complete set given the Architect.

1.4 PRODUCT HANDLING

A. Steel deck shall be stored off the ground with one (1) end elevated to provide drainage and shall be protected from the elements with a waterproof covering, ventilated to avoid condensation.

B. Exercise care to control traffic and storage of materials on deck. Erected deck shall be planked or otherwise protected against damage from workers walking on material, heavy construction traffic and storage.

PART 2 – PRODUCTS

2.1 MATERIALS

A. Steel deck shall be 1 ½" deep, 22 gage, Type B galvanized metal deck having the following minimal sectional properties:

I_p: 0.155 in^4/ft.
I_n: 0.183 in^4/ft.
S_p: 0.186 in^3/ft.
S_n: 0.192 in^3/ft.

Steel deck shall be manufactured from steel conforming to ASTM Designation A1008-00, Grades C, D, or E or A653/A653M-00, Grade SQ33 or higher, or equal, having a minimum yield strength of 33,000 pounds per square inch. The maximum working stress shall not exceed 20,000 pounds per square inch. The unit design stress shall in no case exceed the minimum yield strength of the steel divided by 1.65 for specific design uniform loads. The thickness of 22 gage steel before coating shall be 0.0295" for design thickness and 0.028" for minimum thickness.

B. All accessory items necessary for a complete installation, whether specifically indicated in the specifications and/or drawings shall be furnished by the roof deck manufacturer.

C. The delivered thickness of the uncoated steel shall not be less than 95% of the design thickness.

D. Where possible sheets shall rest on four (4) supports (three span condition).

PART 3 – EXECUTION

3.1 INSTALLATION

A. Attachments:

1. Steel deck units shall be anchored to supporting members, including bearing walls, to provide lateral stability to the top flange of the supporting structural members.
2. Steel decks shall be attached to supporting structural members using a 36/7 pattern with No. 12 – 14 HWH TEK 1 screws when the maximum base metal thickness (support and deck) is less than or equal to 0.210". Where the base metal thickness falls within a range of 0.211" and 0.500", the deck shall be attached to supporting members using a No. 12 – 24 HWH TEK 5 screws. Screws shall have the following minimum allowable capacities: shear capacity of 176 lbs, pullover 295 lbs, and pullout capacity 74 lbs. Powder-actuated deck fasteners are acceptable as a substitute for TEK screws provided the allowable capacities are achieved.
3. Unless noted otherwise on Structural drawings, sides laps are not required. However, side laps are required for spans greater than 5 feet, side laps shall be

fastened together using a No. 10-16 HWH TEK 3 at a maximum spacing of 3 feet center-to-center between supports.

B. All steel to be used for roof deck shall be free of oil, grease, and dirt, and shall be galvanized.

C. Deck sheets will be placed in accordance with approved erection layout drawing supplied by the deck manufacturer and in conformance with the deck manufacturer's standards. Roofs having a slope of ¼" or more in 12 inches shall be erected beginning at the low side to ensure that end laps are shingle fashion. End laps of sheets shall be a minimum of 2 inches and shall occur over supports. Openings not shown on the erection diagrams, such as those required for stacks, conduits, plumbing, vents, etc., shall be cut (and reinforced, if necessary) by the trades requiring the openings.

D. Under no conditions will placed sheets be left unattached at the end of a working day.

END OF SECTION 053123

SECTION 053123 - STEEL ROOF DECK – ADD ALTERNATE #3

PART 1 - GENERAL

1.1 DESCRIPTION

A. Roof deck is to be galvanized steel Type "N" deck.

1.2 REFERENCES

A. AISI - Specification for the Design of Cold-Formed Steel Structural Members

B. ASTM A36 - Structural Steel

C. ASTM A525 - Steel Sheet, Zinc-Coated (Galvanized) by the Hot- Dip Process G60 Coating Class

D. ASTM A446 - Steel, Cold-Rolled Sheet, Carbon, Structural

E. AWS D1.1 - Structural Welding Code

F. SDI - Design Manual for Composite Decks, Form Decks, Roof Decks

1.3 SUBMITTALS

A. The fabricator shall furnish and submit before any fabrication, five (5) copies of shop drawings (erection and fabrication) of his work for the approval of the Architect. One copy of each sheet will be returned marked for corrections or as approved. Copies of approved drawings shall be furnished the job as needed, and one complete set given the Architect.

1.4 PRODUCT HANDLING

A. Steel deck shall be stored off the ground with one end elevated to provide drainage and shall be protected from the elements with a waterproof covering, ventilated to avoid condensation.

B. Exercise care to control traffic and storage of materials on deck. Erected deck shall be planked or otherwise protected against damage from workers walking on material, heavy construction traffic and storage.

PART 2 - PRODUCTS

2.1 MATERIALS

A. Steel deck shall be 3" deep, 22 gage, Type N galvanized metal deck having the following Minimal sectional properties:

I_p: 0.720 in^4 / ft.
I_n: 0.888 in^4 / ft.
S_p: 0.386 in^3 / ft.
S_n: 0.438 in^3 / ft.

Steel deck shall be manufactured from steel conforming to ASTM Designation A1008-00, Grades C, D, or E or A653/A653M-00, Grade SQ33 or higher, or equal, having a minimum yield strength of 33,000 pounds per square inch. The maximum working stress shall not exceed 20,000 pounds per square inch. The unit design stress shall in no case exceed the minimum yield strength of the steel divided by 1.65. For specific design uniform loads. The thickness of 20 gage steel before coating shall be 0.0358" for design thickness and 0.0324" for minimum thickness.

B. All accessory items necessary for a complete installation, whether specifically indicated in the specifications and/or drawings shall be furnished by the roof deck manufacturer.

C. The delivered thickness of the uncoated steel shall not be less than 95% of the design thickness.

D. Where possible sheets shall rest on 4 supports (three span condition).

PART 3 - EXECUTION

3.1 INSTALLATION

A. Attachments:

1. Steel deck units shall be anchored to supporting members, including bearing walls, to provide lateral stability to the top flange of the supporting structural members.

2. Deck shall be attached to supporting members using No. 12 – 14 HWH TEK 1 screws when the maximum base metal thickness (support and deck) is less than or equal to 0.210". Where the base metal thickness falls within a range of 0.211" and 0.500", the deck shall be attached to supporting members using a number 12 – 24 HWH TEK 5 screws. Screws shall have a minimum allowable pullout capacity of 85 lbs. and a minimum allowable shear capacity of 256 lbs. Screw edge distance shall not be less than 3/8".

B. Steel decks shall be attached to supporting structural members using a 36/7 pattern. For spans greater than 5 feet, side laps shall be fastened together at a maximum spacing of 3 feet center-to- center between supports.

C. All steel to be used for roof deck shall be free of oil, grease, and dirt, and shall be galvanized.

D. Deck sheets will be placed in accordance with approved erection layout drawing supplied by the deck manufacturer and in conformance with the deck manufacturer's standards. Roofs having a slope of 1/4" or more in 12 inches shall be erected beginning at the low side to insure that end laps are shingle fashion. End laps of sheets shall be a minimum of 2 inches and shall occur over supports. Openings not shown on the erection diagrams, such as those required for stacks, conduits, plumbing, vents, etc., shall be cut (and reinforced, if necessary) by the trades requiring the openings.

E. Under no conditions will placed sheets be left unattached at the end of a working day.

END OF SECTION 053123

SECTION 053150 - STEEL COMPOSITE FLOOR DECK

PART 1 - GENERAL

1.1 DESCRIPTION

A. Floor form is to be 2" composite steel floor form.

1.2 REFERENCES

A. AIS-Specification for the Design of Cold-Formed Steel Structural Members.

B. ASTM A36 - Structural Steel

C. ASTM A525 - Steel sheet, Zinc-Coated (Galvanized) by the Hot-Dip Process G60 Coating Class

D. ASTM A446 - Steel, Cold-Rolled Sheet, Carbon, Structural

E. AWS D1.1 - Structural Welding Code

F. SDI - Design Manual for Composite Decks, Form Decks, Roof Decks

1.3 SUBMITTALS

A. The fabricator shall furnish and submit before any fabrication, five (5) copies of shop drawings (erection and fabrication) of his work for the approval of the Architect. One (1) copy of each sheet will be returned marked for corrections or as approved. Copies of approved drawings shall be furnished the job as needed, and one (1) complete set given the Architect.

1.4 PRODUCT HANDLING

A. Steel deck shall be stored off the ground with one (1) end elevated to provide drainage and shall be protected from the elements with a waterproof covering, ventilated to avoid condensation.

B. Exercise care to control traffic and storage of materials on deck. Erected deck shall be planked or otherwise protected against damage from workers walking on material, heavy construction traffic and storage.

PART 2 - PRODUCTS

2.1 MATERIALS

A. Metal Floor Deck:

a. Steel floor deck shall be cold formed corrugated steel with a minimum yield strength of 50,000 psi. Sheets shall be galvanized conforming to ASTM A525, G60 coating class. Composite deck shall be 20 ga. unless otherwise noted on the drawings and shall have the following minimal structural properties:

For 20 ga.:

I_p: 0.417 in^4/ft. I_n: 0.412 in^4/ft.
S_p: 0.342 in^3/ft. S_n: 0.347 in^3/ft.

b. All accessory items necessary for a complete installation, such as cover plates, closures, etc., whether specifically indicated in the specifications or on the drawings, shall be furnished by the deck manufacturer.

c. The delivered thickness of the uncoated steel shall not be less than 95% of the design thickness.

PART 3 - EXECUTION

3.1 INSTALLATION

A. Deck sheets shall be welded to supporting steel immediately after alignment using welding washers.

Mechanical fasteners may be substituted for puddle welds. The Contractor shall provide documentation from the mechanical fastener manufacturer as to the equivalent load capacity and proper installation procedure for each type of fastener being used.

B. On steel support members provide three inch (3") minimum bearing. Align and level on supports. Deck shall be side-lapped and span over a minimum of three (3) supports, lapping a minimum of two inches (2") at a supporting member.

C. Fasten side laps in accordance with manufacturer's recommendation.

D. Floor deck shall be fastened to supporting members at all edge ribs plus a sufficient number of interior ribs to provide a maximum average spacing of twelve inches (12"). The maximum spacing between adjacent points of attachment shall not exceed eighteen inches (18").

E. Reinforce deck openings from six inches (6") to eighteen inches (18") in size with 2 x 2 x 1/4 inch steel angles. Place angles perpendicular to flutes; extend minimum two (2) flutes each side of opening and weld to deck.

F. Install six inch (6") wide sheet steel covers where deck changes direction. Spot weld in place twelve inches (12") o.c. maximum.

G. Under no condition will placed sheets be left unattached at the end of a working day.

H. Deck is to be continuous over a minimum of two (2) spans or one (1) line of temporary shoring is to be provided at the mid span of deck. Shoring is to be in place prior to pouring the concrete slab it supports and is to remain in place for a minimum of fifteen (15) days and until the concrete has attained 85% of its specified twenty-eight (28) day strength.

END OF SECTION 053150

SECTION 054000 - COLD-FORMED METAL FRAMING

PART 1 - GENERAL

1.1 RELATED DOCUMENTS

A. Drawings and general provisions of the Contract, including General and Supplementary Conditions and Division 01 Specification Sections, apply to this Section.

1.2 SUMMARY

A. Section Includes:
   1. Exterior non-load-bearing wall framing.
   2. Roof rafter framing.
   3. Ceiling joist framing.
   4. Soffit framing.

1.3 ACTION SUBMITTALS

A. Product Data: For each type of product.

B. Shop Drawings:

   1. Include layout, spacings, sizes, thicknesses, and types of cold-formed steel framing; fabrication; and fastening and anchorage details, including mechanical fasteners.
   2. Indicate reinforcing channels, opening framing, supplemental framing, strapping, bracing, bridging, splices, accessories, connection details, and attachment to adjoining work.

1.4 INFORMATIONAL SUBMITTALS

A. Qualification Data: For testing agency.

B. Product Certificates: For each type of code-compliance certification for studs and tracks.

C. Product Test Reports: For each listed product, for tests performed by a qualified testing agency.

   1. Steel sheet.
   2. Expansion anchors.
   3. Power-actuated anchors.
   4. Mechanical fasteners.
   5. Vertical deflection clips.

6. Horizontal drift deflection clips
7. Miscellaneous structural clips and accessories.

D. Evaluation Reports: For nonstandard cold-formed steel framing post-installed anchors and power-actuated fasteners, from ICC-ES or other qualified testing agency acceptable to authorities having jurisdiction.

1.5 QUALITY ASSURANCE

A. Product Tests: Mill certificates or data from a qualified independent testing agency, or in-house testing with calibrated test equipment, indicating steel sheet complies with requirements, including base-metal thickness, yield strength, tensile strength, total elongation, chemical requirements, and metallic-coating thickness.

B. Code-Compliance Certification of Studs and Tracks: Provide documentation that framing members are certified according to the product-certification program of the Certified Steel Stud Association, the Steel Framing Industry Association, or the Steel Stud Manufacturers Association.

PART 2 - PRODUCTS

2.1 MANUFACTURERS

A. Manufacturers: Subject to compliance with requirements, provide cold-formed metal framing by one of the following:
1. Clark Dietrich Industries, Inc.
2. MarinoWare; Div. of Ware Industries, Inc.
3. Super Stud Building Products
4. Or prior approved equal.

2.2 PERFORMANCE REQUIREMENTS

A. Delegated Design: Engage a qualified professional engineer, as defined in Section 014000 "Quality Requirements," to design cold-formed steel framing.

B. Structural Performance: Provide cold-formed steel framing capable of withstanding design loads within limits and under conditions indicated.

1. Design Loads: As indicated on Drawings.
2. Deflection Limits: Design framing systems to withstand design loads without deflections greater than the following:

    a. Exterior Load-Bearing Wall Framing: Horizontal deflection of 1/600 of the wall height.
    b. Exterior Non-Load-Bearing Framing: Horizontal deflection of 1/600 of the wall height.

c. Roof Rafter Framing: Vertical deflection of 1/360 of the horizontally projected span for live loads.
d. Ceiling Joist Framing: Vertical deflection of 1/360 of the span for live loads and 1/240 for total loads of the span.

3. Design framing systems to provide for movement of framing members located outside the insulated building envelope without damage or overstressing, sheathing failure, connection failure, undue strain on fasteners and anchors, or other detrimental effects when subject to a maximum ambient temperature change of 120 deg F (67 deg C).
4. Design framing system to maintain clearances at openings, to allow for construction tolerances, and to accommodate live load deflection of primary building structure as follows:

   a. Upward and downward movement of 1/2 inch (13 mm).

5. Design exterior non-load-bearing wall framing to accommodate horizontal deflection without regard for contribution of sheathing materials.

C. Cold-Formed Steel Framing Standards: Unless more stringent requirements are indicated, framing shall comply with AISI S100, AISI S200, and the following:

1. Floor and Roof Systems: AISI S210.
2. Wall Studs: AISI S211.
3. Headers: AISI S212.
4. Lateral Design: AISI S213.

2.3 COLD-FORMED STEEL FRAMING MATERIALS

A. Steel Sheet: ASTM A 1003/A 1003M, Structural Grade, Type H, metallic coated, of grade and coating designation as follows:

1. Grade: ST33H (ST230H).
2. Coating: G90 (Z275) or equivalent.

B. Steel Sheet for Vertical Deflection Clips: ASTM A 653/A 653M, structural steel, zinc coated, of grade and coating as follows:

1. Grade: 33 (230)
2. Coating: G90 (Z275).

2.4 EXTERIOR NON-LOAD-BEARING WALL FRAMING

A. Steel Studs: Manufacturer's standard C-shaped steel studs, of web depths indicated on the drawings, punched, with stiffened flanges, and as follows:

1. Minimum Base-Metal Thickness: 0.0428 (18 ga).
2. Flange Width: 1-5/8 inches (41 mm).

B. Steel Track: Manufacturer's standard U-shaped steel track, of web depths indicated on the drawings, unpunched, with unstiffened flanges, and as follows:

1. Minimum Base-Metal Thickness: 0.0428 (18 ga).
2. Flange Width: 1-1/4 inches (32 mm).

C. Single Deflection Track: Manufacturer's single, deep-leg, U-shaped steel track; unpunched, with unstiffened flanges, of web depth to contain studs while allowing free vertical movement, with flanges designed to support horizontal loads and transfer them to the primary structure, and as follows:

1. Minimum Base-Metal Thickness: 0.0428 inch (18 ga).
2. Flange Width: 1 inch (25 mm) plus twice the design gap.

2.5 SOFFIT FRAMING

A. Exterior Soffit Frame: Manufacturer's standard C-shaped steel sections, of web depths indicated on the drawings, with stiffened flanges, and as follows:

1. Minimum Base-Metal Thickness: 0.0428 inch (18 ga)
2. Flange Width: 1-5/8 inches (41 mm) minimum.

2.6 FRAMING ACCESSORIES

A. Fabricate steel-framing accessories from ASTM A 1003/A 1003M, Structural Grade, Type H, metallic coated steel sheet, of same grade and coating designation used for framing members.

B. Provide accessories of manufacturer's standard thickness and configuration, unless otherwise indicated, as follows:

1. Supplementary framing.
2. Bracing, bridging, and solid blocking.
3. Web stiffeners.
4. Anchor clips.
5. End clips.
6. Foundation clips.
7. Gusset plates.
8. Stud kickers and knee braces.
9. Joist hangers and end closures.
10. Hole-reinforcing plates.
11. Backer plates.

2.7 ANCHORS, CLIPS, AND FASTENERS

A. Steel Shapes and Clips: ASTM A 36/A 36M, zinc coated by hot-dip process according to ASTM A 123/A 123M.

B. Post-Installed Anchors: Fastener systems with bolts of same basic metal as fastened metal, if visible, unless otherwise indicated; with working capacity greater than or equal to the design load, according to an evaluation report acceptable to authorities having jurisdiction, based on as appropriate for the substrate.

1. Uses: Securing cold-formed steel framing to structure.
2. Material for Interior Locations: Carbon-steel components zinc plated to comply with ASTM B 633 or ASTM F 1941 (ASTM F 1941M), Class Fe/Zn 5, unless otherwise indicated.
3. Material for Exterior or Interior Locations and Where Stainless Steel Is Indicated: Alloy Group 1 (A1) stainless-steel bolts, ASTM F 593 (ASTM F 738M), and nuts, ASTM F 594 (ASTM F 836M).

C. Power-Actuated Anchors: Fastener systems with working capacity greater than or equal to the design load, according to an evaluation report acceptable to authorities having jurisdiction, based on ICC-ES AC70.

D. Mechanical Fasteners: ASTM C 1513, corrosion-resistant-coated, self-drilling, self-tapping, steel drill screws.

1. Head Type: Low-profile head beneath sheathing; manufacturer's standard elsewhere.

2.8 MISCELLANEOUS MATERIALS

A. Galvanizing Repair Paint: ASTM A 780/A 780M, MIL-P-21035B, or SSPC-Paint 20.

B. Cement Grout: Portland cement, ASTM C 150/C 150M, Type I; and clean, natural sand, ASTM C 404. Mix at ratio of 1 part cement to 2-1/2 parts sand, by volume, with minimum water required for placement and hydration.

C. Nonmetallic, Nonshrink Grout: Factory-packaged, nonmetallic, noncorrosive, nonstaining grout, complying with ASTM C 1107/C 1107M, and with a fluid consistency and 30-minute working time.

D. Shims: Load-bearing, high-density, multimonomer, nonleaching plastic; or cold-formed steel of same grade and metallic coating as framing members supported by shims.

E. Sealer Gaskets: Closed-cell neoprene foam, 1/4 inch (6 mm) thick, selected from manufacturer's standard widths to match width of bottom track or rim track members as required.

PART 3 - EXECUTION

3.1 EXAMINATION

A. Examine substrates, areas, conditions, and abutting structural framing for compliance with requirements for installation tolerances and other conditions affecting performance of the Work.

B. Proceed with installation only after unsatisfactory conditions have been corrected.

3.2 PREPARATION

Install load-bearing shims or grout between the underside of load-bearing wall bottom track and the top of foundation wall or slab at locations with a gap larger than 1/4 inch (6 mm) to ensure a uniform bearing surface on supporting concrete or masonry construction.

A. Install sealer gaskets at the underside of wall bottom track or rim track and at the top of foundation wall or slab at stud or joist locations.

3.3 INSTALLATION, GENERAL

A. Install cold-formed steel framing according to AISI S200, AISI S202, and manufacturer's written instructions unless more stringent requirements are indicated.

B. Install cold-formed steel framing and accessories plumb, square, and true to line, and with connections securely fastened.

1. Cut framing members by sawing or shearing; do not torch cut.
2. Fasten cold-formed steel framing members by welding, screw fastening, clinch fastening, or riveting. Wire tying of framing members is not permitted.

    a. Comply with AWS D1.3/D1.3M requirements and procedures for welding, appearance and quality of welds, and methods used in correcting welding work.
    b. Locate mechanical fasteners, install according to Shop Drawings, and comply with requirements for spacing, edge distances, and screw penetration.

C. Install framing members in one-piece lengths unless splice connections are indicated for track or tension members.

D. Install temporary bracing and supports to secure framing and support loads equal to those for which structure was designed. Maintain braces and supports in place, undisturbed, until entire integrated supporting structure has been completed and permanent connections to framing are secured.

E. Do not bridge building expansion joints with cold-formed steel framing. Independently frame both sides of joints.

F. Install insulation, specified in Section 072100 "Thermal Insulation," in framing-assembly members, such as headers, sills, boxed joists, and multiple studs at openings, that are inaccessible on completion of framing work.

G. Fasten hole-reinforcing plate over web penetrations that exceed size of manufacturer's approved or standard punched openings.

3.4 EXTERIOR NON-LOAD-BEARING WALL INSTALLATION

A. Install continuous tracks sized to match studs. Align tracks accurately and securely anchor to supporting structure.

B. Fasten both flanges of studs to bottom track unless otherwise indicated. Space studs as follows:

1. Stud Spacing: 16 inches (406 mm)

C. Set studs plumb, except as needed for diagonal bracing or required for nonplumb walls or warped surfaces and similar requirements.

D. Isolate non-load-bearing steel framing from building structure to prevent transfer of vertical loads while providing lateral support.

1. Install single deep-leg deflection tracks and anchor to building structure.

E. Install horizontal bridging in wall studs, spaced vertically in rows indicated but not more than 48 inches (1220 mm) apart-typical. Fasten at each stud intersection.

1. Channel Bridging: Cold-rolled steel channel, welded or mechanically fastened to webs of punched studs.
2. Bar Bridging: Proprietary bridging bars installed according to manufacturer's written instructions.

F. Top Bridging for Single Deflection Track: Install row of horizontal bridging within 12 inches (305 mm) of single deflection track. Install a combination of bridging and stud or stud-track solid blocking of width and thickness matching studs, secured to stud webs or flanges.

1. Install solid blocking at centers indicated on Shop Drawings.

G. Install miscellaneous framing and connections, including stud kickers, web stiffeners, clip angles, continuous angles, anchors, and fasteners, to provide a complete and stable wall-framing system.

3.5 JOIST INSTALLATION

A. Install perimeter joist track sized to match joists. Align and securely anchor or fasten track to supporting structure at corners, ends, and spacings indicated.

B. Install joists bearing on supporting frame, level, straight, and plumb; adjust to final position, brace, and reinforce. Fasten joists to both flanges of joist track.

1. Install joists over supporting frame with a minimum end bearing of 1-1/2 inches (38 mm).
2. Reinforce ends and bearing points of joists with web stiffeners, end clips, joist hangers, steel clip angles, or steel-stud sections.

C. Space joists not more than 2 inches (51 mm) from abutting walls, and as follows:

1. Joist Spacing: 16 inches (406 mm).

D. Frame openings with built-up joist headers, consisting of joist and joist track or another combination of connected joists if indicated.

E. Install joist reinforcement at interior supports with single, short length of joist section located directly over interior support, with lapped joists of equal length to joist reinforcement.

1. Install web stiffeners to transfer axial loads of walls above.

F. Install bridging at intervals indicated. Fasten bridging at each joist intersection as follows:
1. Combination Bridging: Combination of flat, taut, steel sheet straps of width and thickness indicated and joist-track solid blocking of width and thickness indicated. Fasten flat straps to bottom flange of joists and secure solid blocking to joist webs.

G. Secure joists to load-bearing interior walls to prevent lateral movement of bottom flange.

H. Install miscellaneous joist framing and connections, including web stiffeners, closure pieces, clip angles, continuous angles, hold-down angles, anchors, and fasteners, to provide a complete and stable joist-framing assembly.

3.6 ERECTION TOLERANCES

A. Install cold-formed steel framing level, plumb, and true to line to a maximum allowable tolerance variation of 1/8 inch in 10 feet (1:960) and as follows:

1. Space individual framing members no more than plus or minus 1/8 inch (3 mm) from plan location. Cumulative error shall not exceed minimum fastening requirements of sheathing or other finishing materials.

3.7 REPAIRS AND PROTECTION

A. Galvanizing Repairs: Prepare and repair damaged galvanized coatings on fabricated and installed cold-formed steel framing with galvanized repair paint according to ASTM A 780/A 780M and manufacturer's written instructions.

B. Provide final protection and maintain conditions, in a manner acceptable to manufacturer and Installer, that ensure that cold-formed steel framing is without damage or deterioration at time of Substantial Completion.

END OF SECTION 054000

SECTION 055000 - METAL FABRICATIONS

PART 1 - GENERAL

1.1 RELATED DOCUMENTS

A. Drawings and general provisions of the Contract, including General and Supplementary Conditions and Division 1 Specification Sections, apply to this Section.

1.2 SUMMARY

A. Section Includes:
   1. Metal ladders.

B. Products furnished, but not installed, under this Section:

   1. Loose steel lintels.

1.3 PERFORMANCE REQUIREMENTS

A. Thermal Movements: Allow for thermal movements from ambient and surface temperature changes acting on exterior metal fabrications by preventing buckling, opening of joints, overstressing of components, failure of connections, and other detrimental effects.

   1. Temperature Change: 120 deg F (67 deg C), ambient; 180 deg F (100 deg C), material surfaces.

1.4 SUBMITTALS

A. Shop Drawings: Show fabrication and installation details for metal fabrications.

   1. Include plans, elevations, sections, and details of metal fabrications and their connections. Show anchorage and accessory items.

B. Qualification Data: For qualified professional engineer.

1.5 QUALITY ASSURANCE

A. Welding Qualifications: Qualify procedures and personnel according to AWS D1.1/D1.1M, "Structural Welding Code - Steel."

B. Welding Qualifications: Qualify procedures and personnel according to the following:

1. AWS D1.1/D1.1M, "Structural Welding Code - Steel."
2. AWS D1.2/D1.2M, "Structural Welding Code - Aluminum."
3. AWS D1.6, "Structural Welding Code - Stainless Steel."

1.6 PROJECT CONDITIONS

A. Field Measurements: Verify actual locations of walls and other construction contiguous with metal fabrications by field measurements before fabrication.

1.7 COORDINATION

A. Coordinate selection of shop primers with topcoats to be applied over them. Comply with paint and coating manufacturers' written recommendations to ensure that shop primers and topcoats are compatible with one another.

B. Coordinate installation of anchorages. Furnish setting drawings, templates, and directions for installing anchorages, including sleeves, concrete inserts, anchor bolts, and items with integral anchors, that are to be embedded in concrete or masonry. Deliver such items to Project site in time for installation.

PART 2 - PRODUCTS

2.1 METALS, GENERAL

A. Metal Surfaces, General: Provide materials with smooth, flat surfaces unless otherwise indicated. For metal fabrications exposed to view in the completed Work, provide materials without seam marks, roller marks, rolled trade names, or blemishes.

2.2 FERROUS METALS

A. Steel Plates, Shapes, and Bars: ASTM A 36/A 36M.

2.3 FASTENERS

A. Steel Bolts and Nuts: Regular hexagon-head bolts, ASTM A 307, Grade A (ASTM F 568M, Property Class 4.6); with hex nuts, ASTM A 563 (ASTM A 563M); and, where indicated, flat washers.

2.4 METAL LADDERS

A. General:

1. Comply with ANSI A14.3 unless otherwise indicated.
2. For elevator pit ladders, comply with ASME A17.1.

B. Steel Ladders:

1. Space siderails 18 inches (457 mm) apart unless otherwise indicated.
2. Space siderails of elevator pit ladders 12 inches (300 mm) apart.
3. Siderails: Continuous, 3/8-by-2-1/2-inch (9.5-by-64-mm)steel flat bars, with eased edges.
4. Rungs: 3/4-inch- (19-mm-) diameter steel bars.
5. Fit rungs in centerline of siderails; plug-weld and grind smooth on outer rail faces.
6. Provide platforms as indicated fabricated from welded or pressure-locked steel bar grating, supported by steel angles. Limit openings in gratings to no more than 3/4 inch (19 mm) in least dimension.
7. Support each ladder at top and bottom and not more than 60 inches (1500 mm) o.c. with welded or bolted steel brackets.
8. Prime exterior ladders, including brackets and fasteners, with primer specified in Division 9 section "High-Performance Coatings."

2.5 MISCELLANEOUS MATERIALS

A. Shop Primers: Provide primers that comply with Division 9 painting Sections and Division 9 Section "High-Performance Coatings."

2.6 FABRICATION, GENERAL

A. Shop Assembly: Preassemble items in the shop to greatest extent possible. Disassemble units only as necessary for shipping and handling limitations. Use connections that maintain structural value of joined pieces. Clearly mark units for reassembly and coordinated installation.

B. Cut, drill, and punch metals cleanly and accurately. Remove burrs and ease edges to a radius of approximately 1/32 inch (1 mm) unless otherwise indicated. Remove sharp or rough areas on exposed surfaces.

C. Form bent-metal corners to smallest radius possible without causing grain separation or otherwise impairing work.

D. Form exposed work with accurate angles and surfaces and straight edges.

E. Weld corners and seams continuously to comply with the following:

1. Use materials and methods that minimize distortion and develop strength and corrosion resistance of base metals.
2. Obtain fusion without undercut or overlap.
3. Remove welding flux immediately.
4. At exposed connections, finish exposed welds and surfaces smooth and blended so no roughness shows after finishing.

F. Form exposed connections with hairline joints, flush and smooth, using concealed fasteners or welds where possible. Where exposed fasteners are required, use Phillips

flat-head (countersunk) fasteners unless otherwise indicated. Locate joints where least conspicuous.

G. Fabricate seams and other connections that will be exposed to weather in a manner to exclude water. Provide weep holes where water may accumulate.

H. Cut, reinforce, drill, and tap metal fabrications as indicated to receive finish hardware, screws, and similar items.

I. Provide for anchorage of type indicated; coordinate with supporting structure. Space anchoring devices to secure metal fabrications rigidly in place and to support indicated loads.

1. Where units are indicated to be cast into concrete or built into masonry, equip with integrally welded steel strap anchors, 1/8 by 1-1/2 inches (3.2 by 38 mm), with a minimum 6-inch (150-mm) embedment and 2-inch (50-mm) hook, not less than 8 inches (200 mm) from ends and corners of units and 24 inches (600 mm) o.c., unless otherwise indicated.

2.7 MISCELLANEOUS FRAMING AND SUPPORTS

A. General: Provide steel framing and supports not specified in other Sections as needed to complete the Work.

B. Fabricate units from steel shapes, plates, and bars of welded construction unless otherwise indicated. Fabricate to sizes, shapes, and profiles indicated and as necessary to receive adjacent construction.

1. Furnish inserts for units installed after concrete is placed.

C. Fabricate supports for operable partitions from continuous steel beams of sizes indicated with attached bearing plates, anchors, and braces as indicated. Drill or punch bottom flanges of beams to receive partition track hanger rods; locate holes where indicated on operable partition Shop Drawings.

D. Prime miscellaneous framing and supports with zinc-rich primer where indicated.

2.8 LOOSE STEEL LINTELS

A. Fabricate loose steel lintels from steel angles and shapes of size indicated for openings and recesses in masonry walls and partitions at locations indicated. Fabricate in single lengths for each opening unless otherwise indicated. Weld adjoining members together to form a single unit where indicated.

B. Size loose lintels to provide bearing length at each side of openings equal to 1/12 of clear span but not less than 8 inches (200 mm) unless otherwise indicated.

C. Prime loose steel lintels located in exterior walls with primer specified in Division 9 Section "High-Performance Coatings."

2.9 FINISHES, GENERAL

A. Comply with NAAMM's "Metal Finishes Manual for Architectural and Metal Products" for recommendations for applying and designating finishes.

B. Finish metal fabrications after assembly.

C. Finish exposed surfaces to remove tool and die marks and stretch lines, and to blend into surrounding surface.

2.10 STEEL AND IRON FINISHES

A. Shop prime iron and steel items not indicated to be galvanized unless they are to be embedded in concrete, sprayed-on fireproofing, or masonry, or unless otherwise indicated.

1. Shop prime with primers specified in Division 9 painting Sections unless primers specified in Division 9 Section "High-Performance Coatings" are indicated.

B. Preparation for Shop Priming: Prepare surfaces to comply with requirements indicated below:

1. Exterior Items: SSPC-SP 6/NACE No. 3, "Commercial Blast Cleaning."
2. Items Indicated to Receive Zinc-Rich Primer: SSPC-SP 6/NACE No. 3, "Commercial Blast Cleaning."
3. Items Indicated to Receive Primers Specified in Division 9 Section "High-Performance Coatings": SSPC-SP 6/NACE No. 3, "Commercial Blast Cleaning."
4. Other Items: SSPC-SP 3, "Power Tool Cleaning."

C. Shop Priming: Apply shop primer to comply with SSPC-PA 1, "Paint Application Specification No. 1: Shop, Field, and Maintenance Painting of Steel," for shop painting.

1. Stripe paint corners, crevices, bolts, welds, and sharp edges.

PART 3 - EXECUTION

3.1 INSTALLATION, GENERAL

A. Cutting, Fitting, and Placement: Perform cutting, drilling, and fitting required for installing metal fabrications. Set metal fabrications accurately in location, alignment, and elevation; with edges and surfaces level, plumb, true, and free of rack; and measured from established lines and levels.

B. Fastening to In-Place Construction: Provide anchorage devices and fasteners where metal fabrications are required to be fastened to in-place construction. Provide threaded fasteners for use with concrete and masonry inserts, toggle bolts, through bolts, lag screws, wood screws, and other connectors.

C. Provide temporary bracing or anchors in formwork for items that are to be built into concrete, masonry, or similar construction.

D. Corrosion Protection: Coat concealed surfaces of aluminum that will come into contact with grout, concrete, masonry, wood, or dissimilar metals with the following:

3.2 INSTALLING MISCELLANEOUS FRAMING AND SUPPORTS

A. General: Install framing and supports to comply with requirements of items being supported, including manufacturers' written instructions and requirements indicated on Shop Drawings.

B. Anchor supports for operable partitions securely to and rigidly brace from building structure.

3.3 ADJUSTING AND CLEANING

A. Touchup Painting: Immediately after erection, clean field welds, bolted connections, and abraded areas. Paint uncoated and abraded areas with the same material as used for shop painting to comply with SSPC-PA 1 for touching up shop-painted surfaces.

1. Apply by brush or spray to provide a minimum 2.0-mil (0.05-mm) dry film thickness.

B. Touchup Painting: Cleaning and touchup painting of field welds, bolted connections, and abraded areas of shop paint are specified in Division 9 painting Sections.

END OF SECTION 055000

SECTION 055113 - METAL PAN STAIRS

PART 1 - GENERAL

1.1 RELATED DOCUMENTS

A. Drawings and general provisions of the Contract, including General and Supplementary Conditions and Division 01 Specification Sections, apply to this Section.

1.2 SUMMARY

A. Section Includes:

1. Preassembled steel stairs with concrete-filled treads.
2. Steel tube railings attached to metal stairs.
3. Steel tube handrails attached to walls adjacent to metal stairs.

1.3 COORDINATION

A. Coordinate selection of shop primers with topcoats to be applied over them. Comply with paint and coating manufacturers' written recommendations to ensure that shop primers and topcoats are compatible with one another.

B. Coordinate installation of anchorages for metal stairs. Furnish setting drawings, templates, and directions for installing anchorages, including sleeves, concrete inserts, anchor bolts, and items with integral anchors, that are to be embedded in concrete or masonry. Deliver such items to Project site in time for installation.

C. Coordinate locations of hanger rods and struts with other work so that they do not encroach on required stair width and are within the fire-resistance-rated stair enclosure.

1.4 ACTION SUBMITTALS

A. Product Data: For metal pan stairs and the following:

1. Prefilled metal-pan-stair treads.
2. Abrasive nosings.
3. Paint products.

B. Shop Drawings: Include plans, elevations, sections, details, and attachments to other work.

C. Samples for Verification: For each type and finish of nosing and tread.

D. Delegated-Design Submittal: For stairs and railings, including analysis data signed and sealed by the qualified professional engineer responsible for their preparation.

1.5 INFORMATIONAL SUBMITTALS

A. Welding certificates.

B. Paint Compatibility Certificates: From manufacturers of topcoats applied over shop primers certifying that shop primers are compatible with topcoats.

1.6 QUALITY ASSURANCE

A. Installer Qualifications: Fabricator of products.

B. Welding Qualifications: Qualify procedures and personnel according to the following:

1. AWS D1.1/D1.1M, "Structural Welding Code - Steel."
2. AWS D1.3/D1.3M, "Structural Welding Code - Sheet Steel."

PART 2 - PRODUCTS

2.1 MANUFACTURERS

A. Manufacturers: Subject to compliance with requirements, provide products by one of the following:

1. American Stair, Inc.
2. Sharon Companies Ltd. (The).
3. Assuming compliance with this section, fabrication by a local fabricator in accordance with these specifications is permitted.

2.2 PERFORMANCE REQUIREMENTS

A. Delegated Design: Engage a qualified professional engineer, as defined in Section 014000 "Quality Requirements," to design stairs and railings.

B. Structural Performance of Stairs: Metal stairs shall withstand the effects of gravity loads and the following loads and stresses within limits and under conditions indicated:

1. Uniform Load: 100 lbf/sq. ft. (4.79 kN/sq. m).
2. Concentrated Load: 300 lbf (1.33 kN) applied on an area of 4 sq. in. (2580 sq. mm).
3. Uniform and concentrated loads need not be assumed to act concurrently.
4. Stair Framing: Capable of withstanding stresses resulting from railing loads in addition to loads specified above.

5. Limit deflection of treads, platforms, and framing members to L/360 or 1/4 inch (6.4 mm), whichever is less.

C. Structural Performance of Railings: Railings shall withstand the effects of gravity loads and the following loads and stresses within limits and under conditions indicated:

1. Handrails and Top Rails of Guards:

a. Uniform load of 50 lbf/ft. (0.73 kN/m) applied in any direction.
b. Concentrated load of 200 lbf (0.89 kN) applied in any direction.
c. Uniform and concentrated loads need not be assumed to act concurrently.

2. Infill of Guards:

a. Concentrated load of 50 lbf (0.22 kN) applied horizontally on an area of 1 sq. ft. (0.093 sq. m).
b. Infill load and other loads need not be assumed to act concurrently.

D. Seismic Performance of Stairs: Metal stairs shall withstand the effects of earthquake motions determined according to ASCE/SEI 7.

1. Component Importance Factor: 1.5.

2.3 METALS

A. Metal Surfaces, General: Provide materials with smooth, flat surfaces unless otherwise indicated. For components exposed to view in the completed Work, provide materials without seam marks, roller marks, rolled trade names, or blemishes.

B. Steel Plates, Shapes, and Bars: ASTM A 36/A 36M.

C. Steel Tubing: ASTM A 500 (cold formed) or ASTM A 513.

D. Uncoated, Cold-Rolled Steel Sheet: ASTM A 1008/A 1008M, either commercial steel, Type B, or structural steel, Grade 25 (Grade 170), unless another grade is required by design loads; exposed.

E. Uncoated, Hot-Rolled Steel Sheet: ASTM A 1011/A 1011M, either commercial steel, Type B, or structural steel, Grade 30 (Grade 205), unless another grade is required by design loads.

F. Aluminum Extrusions: ASTM B 221 (ASTM B 221M), Alloy 6063-T6.

G. Aluminum Castings: ASTM B 26/B 26M, Alloy 443.0-F.

2.4 FASTENERS

A. General: Provide zinc-plated fasteners with coating complying with ASTM B 633 or ASTM F 1941 (ASTM F 1941M), Class Fe/Zn 12 for exterior use, and Class Fe/Zn 5 where built into exterior walls. Select fasteners for type, grade, and class required.

B. Bolts and Nuts: Regular hexagon-head bolts, ASTM A 307, Grade A (ASTM F 568M, Property Class 4.6); with hex nuts, ASTM A 563 (ASTM A 563M); and, where indicated, flat washers.

C. Anchor Bolts: ASTM F 1554, Grade 36, of dimensions indicated; with nuts, ASTM A 563 (ASTM A 563M); and, where indicated, flat washers.

D. Post-Installed Anchors: Torque-controlled expansion anchors or chemical anchors capable of sustaining, without failure, a load equal to six times the load imposed when installed in unit masonry and four times the load imposed when installed in concrete, as determined by testing according to ASTM E 488/E 488M, conducted by a qualified independent testing agency.

1. Material for Interior Locations: Carbon-steel components zinc plated to comply with ASTM B 633 or ASTM F 1941 (ASTM F 1941M), Class Fe/Zn 5, unless otherwise indicated.

2.5 MISCELLANEOUS MATERIALS

A. Shop Primers: Provide primers that comply with "High-Performance Coatings."

B. Bituminous Paint: Cold-applied asphalt emulsion complying with ASTM D 1187/D 1187M.

2.6 FABRICATION, GENERAL

A. Provide complete stair assemblies, including metal framing, hangers, struts, railings, clips, brackets, bearing plates, and other components necessary to support and anchor stairs and platforms on supporting structure.

1. Join components by welding unless otherwise indicated.
2. Use connections that maintain structural value of joined pieces.

B. Preassembled Stairs: Assemble stairs in shop to greatest extent possible. Disassemble units only as necessary for shipping and handling limitations. Clearly mark units for reassembly and coordinated installation.

C. Cut, drill, and punch metals cleanly and accurately. Remove burrs and ease edges to a radius of approximately 1/32 inch (1 mm) unless otherwise indicated. Remove sharp or rough areas on exposed surfaces.

D. Form bent-metal corners to smallest radius possible without causing grain separation or otherwise impairing work.

E. Form exposed work with accurate angles and surfaces and straight edges.

F. Weld connections to comply with the following:

1. Use materials and methods that minimize distortion and develop strength and corrosion resistance of base metals.
2. Obtain fusion without undercut or overlap.
3. Remove welding flux immediately.
4. Weld exposed corners and seams continuously unless otherwise indicated.
5. At exposed connections, finish exposed welds to comply with NOMMA's "Voluntary Joint Finish Standards" for Type 3 welds: partially dressed weld with spatter removed.

G. Form exposed connections with hairline joints, flush and smooth, using concealed fasteners where possible. Where exposed fasteners are required, use Phillips flat-head (countersunk) screws or bolts unless otherwise indicated. Locate joints where least conspicuous.

2.7 STEEL-FRAMED STAIRS

A. Stair Framing:

1. Fabricate stringers of steel channels.

    a. Provide closures for exposed ends of channel stringers.

2. Construct platforms of steel channel headers and miscellaneous framing members as needed to comply with performance requirements indicated.
3. Weld stringers to headers; weld framing members to stringers and headers.
4. Where stairs are enclosed by gypsum board assemblies, provide hanger rods or struts to support landings from floor construction above or below. Locate hanger rods and struts where they do not encroach on required stair width and are within the fire-resistance-rated stair enclosure.

B. Metal Pan Stairs: Form risers, subtread pans, and subplatforms to configurations shown from steel sheet of thickness needed to comply with performance requirements, but not less than 0.067 inch (1.7 mm).

1. Steel Sheet: Uncoated cold or hot-rolled steel sheet unless otherwise indicated.
2. Attach risers and subtreads to stringers with brackets made of steel angles or bars. Weld brackets to stringers and attach metal pans to brackets by welding, riveting, or bolting.
3. At Contractor's option, provide stair assemblies with metal pan subtreads filled with reinforced concrete during fabrication.
4. Provide subplatforms of configuration indicated or, if not indicated, the same as subtreads. Weld subplatforms to platform framing.

    a. Smooth Soffit Construction: Construct subplatforms with flat metal under surfaces to produce smooth soffits.

2.8 STAIR RAILINGS

A. RAILINGS

1. Rails may be bent at corners, rail returns, and wall returns, instead of using prefabricated fittings.
2. Connect posts to stair framing by direct welding unless otherwise indicated.

B. Steel Tube Railings: Fabricate railings to comply with requirements indicated for design, dimensions, details, finish, and member sizes, including wall thickness of tube, post spacings, and anchorage, but not less than that needed to withstand indicated loads.

1. Rails and Posts: 1-1/2-inch- (38-mm-) diameter top and bottom rails and 1-1/2-inch- (38-mm-) diameter posts.
2. Picket Infill: 5/8-inch square pickets spaced less than 4 inches (100 mm) clear.

C. Welded Connections: Fabricate railings with welded connections. Cope components at connections to provide close fit, or use fittings designed for this purpose. Weld all around at connections, including at fittings.

1. Finish welds to comply with NOMMA's "Voluntary Joint Finish Standards" for Type 3 welds: partially dressed weld with spatter removed as shown in NAAMM AMP 521.

D. Form changes in direction of railings as follows:

1. As detailed.
2. By bending.

E. For changes in direction made by bending, use jigs to produce uniform curvature for each repetitive configuration required. Maintain cross section of member throughout entire bend without buckling, twisting, cracking, or otherwise deforming exposed surfaces of components.

F. Close exposed ends of railing members with prefabricated end fittings.

G. Provide wall returns at ends of wall-mounted handrails unless otherwise indicated. Close ends of returns unless clearance between end of rail and wall is 1/4 inch (6 mm) or less.

H. Connect posts to stair framing by direct welding unless otherwise indicated.

I. Brackets, Flanges, Fittings, and Anchors: Provide wall brackets, end closures, flanges, miscellaneous fittings, and anchors for interconnecting components and for attaching to other work. Furnish inserts and other anchorage devices for connecting to concrete or masonry work.
1. For nongalvanized railings, provide nongalvanized ferrous-metal fittings, brackets, fasteners, and sleeves, except galvanize anchors embedded in exterior masonry and concrete construction.
2. Provide type of bracket with flange tapped for concealed anchorage to threaded hanger bolt and that provides 1-1/2-inch (38-mm) clearance from inside face of handrail to finished wall surface.

J. Fillers: Provide fillers made from steel plate, or other suitably crush-resistant material, where needed to transfer wall bracket loads through wall finishes to structural supports. Size fillers to suit wall finish thicknesses and to produce adequate bearing area to prevent bracket rotation and overstressing of substrate.

2.9 FINISHES

A. Finish metal stairs after assembly.

B. Preparation for Shop Priming: Prepare uncoated ferrous-metal surfaces to comply with SSPC-SP 3, "Power Tool Cleaning."

C. Apply shop primer to uncoated surfaces of metal stair components, except those with galvanized finishes and those to be embedded in concrete or masonry unless otherwise indicated. Comply with SSPC-PA 1, "Paint Application Specification No. 1: Shop, Field, and Maintenance Painting of Steel," for shop painting.

PART 3 - EXECUTION

3.1 INSTALLING METAL PAN STAIRS

A. Fastening to In-Place Construction: Provide anchorage devices and fasteners where necessary for securing metal stairs to in-place construction. Include threaded fasteners for concrete and masonry inserts, through-bolts, lag bolts, and other connectors.

B. Cutting, Fitting, and Placement: Perform cutting, drilling, and fitting required for installing metal stairs. Set units accurately in location, alignment, and elevation, measured from established lines and levels and free of rack.

C. Install metal stairs by welding stair framing to steel structure or to weld plates cast into concrete unless otherwise indicated.

D. Provide temporary bracing or anchors in formwork for items that are to be built into concrete, masonry, or similar construction.

E. Fit exposed connections accurately together to form hairline joints. Weld connections that are not to be left as exposed joints but cannot be shop welded because of shipping size limitations. Do not weld, cut, or abrade surfaces of exterior units that have been hot-dip galvanized after fabrication and are for bolted or screwed field connections.

F. Field Welding: Comply with requirements for welding in "Fabrication, General" Article.

G. Place and finish concrete fill for treads and platforms to comply with Section 033000 "Cast-in-Place Concrete."

3.2 INSTALLING RAILINGS

A. Adjust railing systems before anchoring to ensure matching alignment at abutting joints. Space posts at spacing indicated or, if not indicated, as required by design loads. Plumb posts in each direction. Secure posts and rail ends to building construction as follows:

1. Anchor posts to steel by welding to steel supporting members.
2. Anchor handrail ends to concrete and masonry with steel round flanges welded to rail ends and anchored with postinstalled anchors and bolts.

B. Attach handrails to wall with wall brackets. Locate brackets as indicated or, if not indicated, at spacing required to support structural loads. Secure wall brackets to building construction as required to comply with performance requirements and as follows:
1. For steel-framed partitions, use toggle bolts installed through flanges of steel framing or through concealed steel reinforcements.

3.3 ADJUSTING AND CLEANING

A. Touchup Painting: Immediately after erection, clean field welds, bolted connections, and abraded areas of shop paint, and paint exposed areas with same material as used for shop painting to comply with SSPC-PA 1 for touching up shop-painted surfaces.

1. Apply by brush or spray to provide a minimum 2.0-mil (0.05-mm) dry film thickness.

B. Touchup Painting: Cleaning and touchup painting of field welds, bolted connections, and abraded areas of shop paint are specified in "High-Performance Coatings."

END OF SECTION 055113

SECTION 057300 – DECORATIVE METAL RAILINGS

PART 1 - GENERAL

1. 1 WORK INCLUDED

A. Furnish and install aluminum picket railings and components.

1.2 RELATED WORK

A. Section 061000 - Rough Carpentry for wood blocking for anchoring railings

1. 3 REFERENCES

A. Aluminum Association (AA)
   1. ASD-1 Aluminum Standards and Data
   2. DAF-45 Designation System for Aluminum Finishes

B. American Architectural Manufacturers Association (AAMA)
   1. AAMA 2605-05: Voluntary Specification, Performance Requirements and Test Procedures for Superior Performing Organic Coatings on Aluminum Extrusions and Panels.
   2. AAMA 2604-05: Voluntary Specification, Performance Requirements and Test Procedures for High Performance Organic Coatings on Aluminum Extrusions and Panels.
   3. AAMA 2603-02: Voluntary Specification, Performance Requirements and Test Procedures for Pigmented Organic Coatings on Aluminum Extrusions and Panels.

C. American National Standards Institute (ANSI)
   1. A21 .1 Safety Requirements for Floor and Wall Openings, Railings and Toe Boards.
   2. A58.1 Minimum Design Loads in Buildings and Other Structures.
   3. Al 17.1 Accessible and Usable Buildings and Facilities.

D. American Society for Testing and Materials (ASTM)
   1. B 221 Specification for Aluminum-Alloy Bars, Rods, Wires, Shapes and Tubes.
   2. B 429 Specification for Aluminum-Alloy Extruded Structural Pipe and Tube.
   3. D 1730 Recommended Practices for Preparation of Aluminum and Aluminum Alloy Surfaces for Painting.
   4. E 894 Standard Test Methods for Anchorage of Permanent Metal Railing Systems and Rails for Buildings.
   5. E 935 Standard Test Methods for Performance of Permanent Metal Railing Systems and Rails for Buildings.
   6. E 985 Specification for Permanent Metal Railing Systems and Rails for Buildings.

E. National Association of Architectural Metal Manufacturers (NAAMM)
   1. Metal Finishes Manual
   2. Pipe Railing Manual
   3. Stair Manual

F. National Ornamental and Miscellaneous Metals Association (NOMMA)
   1. Metal Rail Manual

1.4 PERFORMANCE REQUIREMENTS

A. General: In engineering handrail and railing systems to withstand structural loads indicated, determine allowable design working stresses of railing materials based on the following:
   1. Aluminum: AA "Specifications for Aluminum Structures."

B. Structural Performance of Handrails and Railing Systems: Engineer, fabricate, and install handrails and railing systems to withstand the following structural loads without exceeding the allowable design working stress of the materials for handrails, railing systems, anchors, and connections. Apply each load to produce the maximum stress in each of the respective components comprising handrails and railing systems.

   1. Toprail of Guardrail System: Capable of withstanding the following loads applied as indicated:
      a. Uniform load of 50 pounds per lineal foot applied horizontally at right angles to the top rail.

   2. Infill Area of Guardrail Systems: Capable of withstanding the following loads applied as indicated:
      a. Concentrated load of 25 pounds per square foot applied horizontally at right angles over the entire tributary area, including openings and spaces between rails.
      b. Reactions due to the above load need not be combined with those loads on the toprail of guardrail system.

   3. Handrails: The mounting of handrails shall be such that the completed handrail and supporting structure are capable of withstanding the following loads applied as indicated:
      a. Concentrated load of 200 pounds applied in any direction at any point on the handrail.
      b. These loads shall not be assumed to act cumulatively with those loads on the infill area of guardrail system.

C. Thermal Movements: Allow for thermal movement resulting from the following maximum change (range) in ambient temperature in engineering, fabricating, and installing of joints, overstressing of components and connections, and other detrimental effects. Base engineering calculations on actual surface temperatures of materials due to both solar heat gain and nighttime sky heat loss.
   1. Temperature Change (Range): 120 deg. F ambient; 180 deg. F material surfaces.

D. Control of Corrosion: Prevent galvanic action and other forms of corrosion by insulating metals and other materials from direct contact with incompatible materials.

1.5 SUBMITTALS

A. Submit shop drawings and product data under provisions of Section 013300.

B. Indicate component details, materials, finishes, connection and joining methods, and the relationship to adjoining work.

C. Submit manufacturer's installation instructions under provisions of Section 013300.

1.6 DELIVERY, STORAGE AND HANDLING

A. Deliver materials to the job site in good condition and properly protected against damage to finished surfaces.

B. Storage on site:
   1. Store material in a location and in a manner to avoid damage. Stacking shall be done in a way that will prevent bending.
   2. Store material in a clean, dry location away from uncured concrete and masonry. Cover with waterproof paper, tarpaulin, or polyethylene sheeting in a manner that will permit circulation of air inside the covering.

C. Keep handling on site to a minimum. Exercise particular care to avoid damage to finishes of material.

PART 2 - PRODUCTS

2. 1 ALUMINUM DECORATIVE RAILINGS

A. Basis-of-Design Product: Subject to compliance with requirements, provide ATR Technologies, Inc.; **Style 6-A** or a comparable product by one of the following:
   1. AZEK Building Products, Inc.
   2. Blum, Julius & Co., Inc.
   3. C.R. Laurence Co., Inc.
   4. Livers Bronze Co.

B. Source Limitations: Obtain aluminum decorative railing components from single source from single manufacturer.

2.2 METALS

A. General: Provide metal free from surface blemishes where exposed to view in the finished unit. Exposed-to-view surfaces exhibiting pitting, seam marks, roller marks, stains, discolorations, or other imperfections on finished units are not acceptable.

B. Aluminum: Alloy and temper recommended by aluminum producer and finisher for type of use and finish indicated, and with not less than the strength and durability properties of the alloy and temper designated below for each aluminum form required:
   1. Extruded Bar and Tube: ASTM B 221, Alloys 6005-T5, 6061-T6 and 6063-T6.
   2. Extruded Structural Pipe and Tube: ASTM 429, Alloy 6063-T6
   3. Drawn Seamless Tube: ASTM B 210, 6063-T832.
   4. Plate and Sheet: ASTM B 209, Alloys 6061-T6 and 6063-T6.
   5. Die and Hand Forging: ASTM B 247, 6061-T6.
   6. Castings: ASTM B 26, A356-T6.

2.3 RAILING SYSTEM

A. Material shall conform to 2.2 and be finished in accordance with 2.7.
B. Railing system shall be permanently anchored.

C. Top Rails
   1. Fabricate Top Rails from painted aluminum tube with nominal size of 1-9/16 in. w x 1-1/2 in. h, Part Number 1-B.
   2. Include flat closure.

D. Bottom Rails
   1. Fabricate Bottom Rail from painted aluminum tube with nominal size of 1-1/2 in. w x 1-1/2 in. h, Part Number 2-C.
   2. Include closure.

E. Posts
   1. Fabricate posts from painted aluminum tube with a nominal size of 1-1/2 in. w x 1-1/2 in. h, Part Number 4-A
   2. If required, provide post reinforcement to meet loading criteria.

G. Connection Splices
   1. Internal connection splices shall be of extruded aluminum.

H. Mounting Base Plates
   1. Base plates shall be of aluminum attached to ends of Posts by means of mechanical attachment. Screws shall be of stainless-steel flat socket head machine screws.
   2. Baseplate Mount: Style 5B

2.4 FASTENERS

A. Fasteners for Anchoring Railings to Other Construction: Select fasteners of the type, grade, and class required to produce connections that are suitable for anchoring railing to other types of construction indicated and capable of withstanding design loadings.
   1. For aluminum railings, provide fasteners fabricated from type 304 stainless steel.

B. Fasteners for Interconnecting Railing Components: Use fasteners of same basic metal as the fastened metal, unless otherwise indicated. Do not use metals that are corrosive or incompatible with materials joined.

C. Cast-in-Place and Post-Installed Anchors: Anchors of type indicated below, fabricated from corrosion- resistant materials with capability to sustain, without failure, the loads determined by local code requirements.
   1. Material for Exterior Locations and Where Stainless Steel Is Indicated: Alloy Group 1 (A1) stainless steel bolts, ASTM F593 and nuts, ASTM F594.

2.5 GROUT AND ANCHORING CEMENT

A. Non-shrink, Non-metallic Grout: Premixed, factory-packaged, non-shrink, non-metallic, non-staining, non-corrosive grout. Provide grout specifically recommended by manufacturer for interior and exterior applications. Minimum 28 day compressive strength of 3000 psi.

B. Products: Subject to compliance with requirements, provide one of the following:
   1. Erosion-Resistant Anchoring Cement:
      a. EMACO® GRIP by BASF Building Systems
      b. QUIKRETE® Commercial Grade FastSet™ by The QUIKRETE Companies

2.6 FABRICATION

A. Fabricate railing with non-welded, internal and mechanical connections with no exposed fasteners.
B. Form all changes in rail direction by mitered, hairline mechanical joints.
C. Cut materials square and remove burrs from all exposed edges, with no chamfer.
D. Make exposed joints butt tight and flush.
E. Close exposed visible ends of Toprails and Handrails by use of flat end cap.
F. Locate mid rails 4 in. max clearance below Top Rail.
G. Locate bottom rails 4 in. max. clearance above finished adjacent mounting surface.
H. Verify dimensions on site prior to shop fabrication.

2.7 FINISHES, GENERAL

A. Comply with NAAMM "Metal Finishes Manual" for recommendations relative to applying and designating finishes.
B. Protect mechanical finishes on exposed surfaces from damage per manufacturer's recommendations.

2.8 ALUMINUM FINISH

A. Finish designations prefixed AAMA conform to the system established by the American Architectural Manufacturers Association.

B. Painted finish shall be a type that meets the requirements of AAMA 2604-05 (Voluntary Specification, Performance Requirements and Test Procedures for High Performance Organic Coatings on Aluminum Extrusions and Panels). One of the following applications may be used:

   1. Finish shall be a baked enamel containing 70% Fluorocarbon Resin - Kynar 500 by Atochem North America or Hylar 5000 by Ausimont USA, Inc. applied over the manufacturer's recommended inhibitive primer. Applicator may use a chrome chemical conversion coating pretreatment process or a non-chrome conversion coating pretreatment process according to the supplier's recommendations in order to comply with AAMA 2604-05.

PART 3- EXECUTION

3.1 PREPARATION

A. Supply items to be cast in concrete.

3.2 DISSIMILAR METALS

A. When aluminum components come into contact with dissimilar metals, surfaces shall be kept from direct contact by painting the dissimilar metal with a heavy coat of an epoxy/polyurethane or provide a heavy vinyl tape barrier.
B. When aluminum components come into contact with cement or lime mortar, exposed aluminum surfaces shall be painted with epoxy/polyurethane.

3.3 INSTALLATION

A. Install in accordance with shop drawings and manufacturer's instructions.
B. Erect work square and level, horizontal or parallel to rake of steps or ramp, and free from distortion or defects detrimental to appearance or performance.
C. Expansion joints shall be provided as needed to allow for thermal expansion or contraction.
D. Provide weep holes in hollow sections of railing.

3.4 CLEANING

A. As installation is completed, wash thoroughly using plain water containing a mild soap or detergent. Aluminum with a painted finish shall be cleaned with plain water containing a mild soap or detergent.
B. Do not use an acid solution, steel wool or other harsh abrasives.
C. If stains remain after washing, remove paint finish and restore in accordance with NAAMM Metal Finishes Manual.

3.5 REPAIR OF DEFECTIVE WORK

A. Remove stained or otherwise defective work and replace with material that meets specification requirements.

END OF SECTION 057300

SECTION 057313 – GLAZED DECORATIVE METAL RAILINGS

PART 1 – GENERAL

Section 1.01 SUMMARY OF WORK

A. Fabricate and install pre-engineered, component-based, ornamental railing system in accordance with the requirements set forth in this section.

Section 1.02 ADDITIONAL WORK INCLUDED IN THIS SECTION

A. Reinforcing for wall rail brackets at dry wall partitions – supplied and installed by General Contractor.
B. Field measuring for weld plates, sleeves and insert locations by railing installer.
C. Field measuring by railing installer.

Section 1.03 RELATED WORK SPECIFIED IN OTHER SECTIONS

A. Section 03 30 00: Cast-in-Place Concrete
B. Section 08 80 00: Glazing
C. Section 09 65 00: Resilient Flooring

Section 1.04 STRUCTURAL REQUIREMENTS

The structural adequacy of the metal stair and railing design is the responsibility of the designer or professional of record.

A. Railing assembly shall withstand a minimum concentrated load of 200 pounds applied vertically downward or horizontally in any direction, but not simultaneously, at any point on the top rail.

Section 1.05 QUALITY ASSURANCE

A. Fabricator Qualifications: Furnish references listing projects of similar size and scope
B. Installer Qualifications
C. Regulatory Requirements
   1. Components and installation are to be in accordance with state and local code authorities
   2. Components and installation are to follow current ADA and ICC/ANSI A117.1 guidelines.

Section 1.06 REFERENCES

Include only reference standards that are to be indicated within the text of this section. Edit the following, adding and deleting as required for project and product selection.

A. Aluminum Association (AA)
   1. ABH-21 Aluminum Brazing Handbook

2. ASD-1 Aluminum Standards and Data
3. DAF-45 Designation System for Aluminum Finishes
4. SAA-46 Standards for Anodized Architectural Aluminum

B. American Architectural Manufacturers Association (AAMA)
1. AAMA 605.1 Specification for High Performance Organic Coatings on Architectural Extrusions and Panels.

C. American Concrete Institute (ACI)
1. ACI 347 Recommended Practice for Concrete Formwork

D. American Institute of Steel Construction (AISC)
1. Manual of Steel Construction

E. American Iron and Steel Institute (AISI)
1. Steel Products Manual; Stainless and Heat Resisting Steel.
2. Code of Standard Practice

F. American National Standards Institute (ANSI)
1. ANSI A58.1 Minimum Design Loads in Buildings and Other Structures.
2. ICC/ANSI A117.1 Accessible and Usable Buildings and Facilities.
3. ANSI A97.1 Safety Performance Specifications and Methods of Test for Safety Glazing Material used in Buildings.

G. Society for Testing and Materials (ASTM)
1. A 167 Specification for Stainless and Heat Resisting Chromium-Nickel Steel Plate, Sheet, and Strip.
2. A 269 Specification for Seamless and Welded Austenitic Stainless Steel Tubing for General Service.
3. A 312 Specification for Seamless and Welded Austenitic Stainless Steel Pipe.
4. A1264-1 Safety Requirements for Workplace Floor and Wall Openings, Stairs and Railing Systems
5. B 43 Specification for Standard Sizes of Seamless Red Brass Pipe.
6. B 209 Specification for Aluminum and Aluminum Alloy Sheet and Plate.
7. B 210 Specification for Aluminum and Aluminum Alloy Drawn Seamless Tubes.
8. B 211 Aluminum and Aluminum Alloy Bar, Rod and Wire
9. B 221 Specification for Aluminum-Alloy Bars, Rods, Wires, Shapes and Tubes
10. B 241 Specification for Aluminum and Aluminum Alloy Seamless Pipe and Seamless Extruded Tube.
11. B 429 Specification for Aluminum-Alloy Extruded Structural Pipe and Tube.
12. B 455 Specification for Copper-Zinc-Lead Alloy (Leaded Brass) Extruded Shapes.
13. B 584 Specification for Copper Alloy Sand Castings for General Applications.
14. C 595 Specification for Blended Hydraulic Cements.
15. C1036 Standard Specification for Flat Glass
16. C 1172 Standard Specification for Laminated Architectural Flat Glass.
17. D 1730 Recommended Practices for Preparation of Aluminum and Aluminum Alloy Surfaces for Painting.
18. E 84 Test Method for Surface Burning Characteristics of Building Materials.

19. E 894 Standard Test Methods for Anchorage of Permanent Metal Railing Systems and Rails for Buildings.
20. E 935 Standard Test Methods for Performance of Permanent Metal Railing Systems and Rails for Buildings.
21. E 985 Specification for Permanent Metal Railing Systems and Rails for Buildings.
22. E 1300 Standard Practice for Determining Load Resistance of Glass in Buildings
23. E 2353 Standard Test Methods for Performance of Glass in Permanent Glass Railing Systems, Guards, & Balustrades.
24. E 2358 Standard Specification for Performance of Glass in Permanent Glass Railing Systems, Guards, & Balustrades.

H. American Welding Society (AWS)
   1. Specifications for Welding Rods and Bare Electrodes.

I. Americans With Disabilities Act Accessibility Guidelines (ADAAG)

J. General Service Administration (GSA) Federal Specifications (FS)
   1. DD-G-1403 Glass, Plate (Float), Sheet, Figured, and Spandrel (Heat Strengthened and Fully Tempered).
   2. QQ-C-390 Copper Alloy Castings.
   3. QQ-S-766 Stainless Steel, Class 302 or 304.
   4. FS-TT-P-645 Primer, Paint, Zinc Chromate, Alkyd Type.
   5. FS-TT-P-645A Primer, Paint, Zinc Chromate, Alkyd Type.

K. International Code Council (ICC)
   1. International Building Code (IBC)
   2. International Residential Code (IRC)

L. Iron and Steel Society (ISS)
   1. Steel Products Manual
      a. Stainless and Heat Resisting Steels

O. National Association of Architectural Metal Manufacturers (NAAMM) and National Ornamental and Miscellaneous Metals Association (NOMMA)
   1. Metal Finishes Manual

P. National Association of Architectural Metal Manufacturers (NAAMM)
   1. Metal Stair Manual

Q. National Fire Protection Association (NFPA)
   1. 101 Life Safety Code

R. Institute of Building Sciences
   1. Metric Guide for Federal Construction

Section 1.07 SUBMITTALS

A. Submit product data under provisions of Section 013300. Including description of materials, components, fabrication, finishes.
   1. Submit manufacturer's shop drawings, including plans, elevations, sections, and details, indicating materials, components, sizes, dimensions, tolerances, hardware, fasteners, finishes, options, accessories, and installation. Show details of attaching railing system to supports.

B. Submit manufacturer's samples of standard materials, finishes, colors, and textures.
C. Submit mock up: Full size in place mock up complete with two posts, glass and full size hardware
D. Test Reports: Submit test reports indicating compliance with ASTM E985.
E. Manufacturers Quality Assurance: Submit manufacturer's certification that materials comply with specified requirements and are suitable for the intended application. Submit certification that the manufacturer has not less than 5 years experience producing the product specified in this section. The manufacturer or an approved installer will do the installation of this product.
F. Maintenance Instructions: Submit manufacturer's maintenance and cleaning instructions.
G. Warranty: Submit manufacturer's standard warranty.
H. Certificates:
    a. Furnish manufacturer's certification that materials meet specification requirements.
I. Substitutions:
    1. Any changes in specified material must meet requirements of set forth is Section 012500 Substitution Procedures.
    2. Submit the following with the substitution request.
        a. Detailed specifications of construction and fabrication
        b. Independent certified test reports indicating compliance with design and performance requirements specified in this section.
        c. Full size samples of major components.
        d. 12 inch long sample of top railing

Section 1.08 DELIVERY, STORAGE AND HANDLING

A. Deliver materials to the job site in good condition and properly protected against damage to finished surfaces.
B. Storage on site:
    1. Store material in a location and in a manner to avoid damage. Stacking shall be done in a way, which will prevent bending.
    2. Store material in a clean, dry location away from uncured concrete and masonry. Cover with waterproof paper, tarpaulin, or polyethylene sheeting in a manner that will permit circulation of air inside the covering.
    3. Keep handling on site to a minimum. Exercise particular care to avoid damage to finishes of material.

PART 2 – PRODUCTS

Section 2.01 ACCEPTABLE MANUFACTURER

A. Basis of Design: STRUCT-U-RAIL as manufactured by LIVERS BRONZE CO. Phone: 816-300-2828. Web site: www.liversbronze.com. E-mail: livers@liversbronze.com
B. SHOE Glass Railing System by VIVA Railings
C. Equal by CR Laurence
    1. Shoe: Part #B5S10D
    2. Top Rail: Part #GR15BS

3. Handrail: Part #HRH15BS

Section 2.02 MATERIALS AND FINISHES

A. Stainless Steel: Type 304
   1. Finish: Ornamental Grade

E. Glass:
   1. Fully tempered ASTM C 1048 Kind FT quality q3 conforming to the safety requirements of ANSI Z97.1.
   2. Laminated, fully tempered, ASTM C 1172, with rigid interlayer – PVB or SGP. Laminated glass is required per IBC, SGP Interlayer required for exterior glass.
   3. Tint: None

Section 2.03 RAILING SYSTEM

A. Material shall conform to 2.02. and be finished in accordance with 2.02.
B. Railing system shall be as listed in section 2.01.
C. Cap Railing: Standard cap railing for glass is a formed stainless steel channel.
D. Side Railings: Fabricate 1.5" diameter side rails from stainless steel
E. Glass support bases: Use standard extruded aluminum base for 9/16" laminated glass, 11/16" laminated glass or 13/16" laminated glass. Top mount base to ½" embedded steel plate (by steel trade) or steel stringer. Aluminum base is mounted continuous and is anchored at 27" o.c. for steel and 9" o.c. for concrete.
F. Glass infill shall be 1/2" tempered glass or laminated glass, conform to the safety requirements of ANSI Z97.1. Glass is mechanically locked into aluminum base at 9" centers. Curved laminated glass is grouted into the aluminum base.
G. Fittings: Shall be stainless steel. Side railing bracket Basis of Design: Livers Bronze RB1053SS
H. Trim: Trim profiles to be as shown on the drawings and fabricated from the material / finish as shown.

Section 2.04 FASTENERS

A. All mechanical fasteners used in the assembly of stainless steel railings shall be manufactured from stainless steel.
B. Exposed mechanical fasteners for use with bronze materials shall be manufactured from yellow brass.
C. Cement: Hydraulic, ASTM C 595, factory prepared with accelerator.

Section 2.05 HANDRAIL BRACKETS

A. Stainless steel – fabricators standard bracket for product specified.

Section 2.06 FABRICATION

A. All metal fabrication to be performed by a single source fabricator.

PART 3 -- EXECUTION

Section 3.01 PREPARATION

A. Supply items to be cast in concrete. These items are to be shown on shop drawings if provided by the fabricator.

Section 3.02 METAL INTERACTION

A. When bronze and aluminum components come into contact with dissimilar metals, surfaces shall be kept from direct contact by painting the dissimilar metal with a heavy coat of a proper primer.

Section 3.03 INSTALLATION

A. Install in accordance with shop drawings and manufacturer's instructions at locations indicated on the drawings.
B. Erect work square and level, horizontal or parallel to rake of steps or ramp, rigid, and free from distortion or defects detrimental to appearance or performance.
C. Expansion joints shall be provided as needed to allow for thermal expansion or contraction.

Section 3.04 CLEANING

A. As installation is completed, wash thoroughly using clean water and soap; rinse with clean water.
B. Do not use acid solution, steel wool or other harsh abrasives.

Section 3.05 REPAIR OF DEFECTIVE WORK

A. Remove stained or otherwise defective work and replace with material that meets specification requirements.
B. Repair damaged finish as directed by Architect
C. Replace defective or damaged components as directed by Architect.

END OF SECTION 057313

SECTION 061053 - MISCELLANEOUS CARPENTRY

PART 1 - GENERAL

1.1 RELATED DOCUMENTS

A. Drawings and general provisions of the Contract, including General and Supplementary Conditions and Division 1 Specification Sections, apply to this Section.

1.2 SUMMARY

A. This Section includes the following:

1. Rooftop equipment bases and support curbs.
2. Wood blocking and nailers.

1.3 DEFINITIONS

A. Dimension Lumber: Lumber of 2 inches nominal (38 mm actual) or greater but less than 5 inches nominal (114 mm actual) in least dimension.

1.4 SUBMITTALS

A. Product Data: For each type of process and factory-fabricated product. Indicate component materials and dimensions and include construction and application details.

1. Include data for wood-preservative treatment from chemical treatment manufacturer and certification by treating plant that treated materials comply with requirements. Indicate type of preservative used and net amount of preservative retained.
2. For products receiving a waterborne treatment, include statement that moisture content of treated materials was reduced to levels specified before shipment to Project site.
3. Include copies of warranties from chemical treatment manufacturers for each type of treatment.

B. Research/Evaluation Reports: For the following, showing compliance with building code in effect for Project:

1. Preservative-treated wood.
2. Power-driven fasteners.
3. Powder-actuated fasteners.

1.5 DELIVERY, STORAGE, AND HANDLING

A. Stack lumber flat with spacers between each bundle to provide air circulation. Provide for air circulation around stacks and under coverings.

PART 2 - PRODUCTS

2.1 WOOD PRODUCTS, GENERAL

A. Lumber: DOC PS 20 and applicable rules of grading agencies indicated. If no grading agency is indicated, provide lumber that complies with the applicable rules of any rules-writing agency certified by the ALSC Board of Review. Provide lumber graded by an agency certified by the ALSC Board of Review to inspect and grade lumber under the rules indicated.

1. Factory mark each piece of lumber with grade stamp of grading agency.
2. For exposed lumber indicated to receive a stained or natural finish, mark grade stamp on end or back of each piece.
3. Provide dressed lumber, S4S, unless otherwise indicated.

2.2 WOOD-PRESERVATIVE-TREATED MATERIALS

A. Preservative Treatment by Pressure Process: AWPA C2.

1. Preservative Chemicals: Acceptable to authorities having jurisdiction and containing no arsenic or chromium.

B. Kiln-dry lumber after treatment to a maximum moisture content of 19 percent. Do not use material that is warped or does not comply with requirements for untreated material.

C. Mark lumber with treatment quality mark of an inspection agency approved by the ALSC Board of Review.

D. Application: Treat items indicated on Drawings, and the following:

1. Wood cants, nailers, curbs, equipment support bases, blocking, stripping, and similar members in connection with roofing, flashing, vapor barriers, and waterproofing.
2. Wood sills, sleepers, blocking, and similar concealed members in contact with masonry or concrete.

2.3 MISCELLANEOUS LUMBER

A. General: Provide miscellaneous lumber indicated and lumber for support or attachment of other construction, including the following:

1. Blocking.
2. Nailers.
3. Rooftop equipment bases and support curbs.

B. For items of dimension lumber size, provide Construction or No. 2 grade lumber with 19 percent maximum moisture content of any species.

C. For blocking and nailers used for attachment of other construction, select and cut lumber to eliminate knots and other defects that will interfere with attachment of other work.

2.4 FASTENERS

A. General: Provide fasteners of size and type indicated that comply with requirements specified in this Article for material and manufacture.

1. Where carpentry is exposed to weather, in ground contact, pressure-preservative treated, or in area of high relative humidity, provide fasteners of Type 304 stainless steel.

B. Nails, Brads, and Staples: ASTM F 1667.

C. Power-Driven Fasteners: NES NER-272.

D. Wood Screws: ASME B18.6.1.

E. Screws for Fastening to Cold-Formed Metal Framing: ASTM C 954, except with wafer heads and reamer wings, length as recommended by screw manufacturer for material being fastened.

F. Lag Bolts: ASME B18.2.1 (ASME B18.2.3.8M).

G. Bolts: Steel bolts complying with ASTM A 307, Grade A (ASTM F 568M, Property Class 4.6); with ASTM A 563 (ASTM A 563M) hex nuts and, where indicated, flat washers.

2.5 MISCELLANEOUS MATERIALS

A. Flexible Flashing: Self-adhesive, rubberized-asphalt compound, bonded to a high-density, polyethylene film to produce an overall thickness of not less than 0.025 inch (0.6 mm).

PART 3 - EXECUTION

3.1 INSTALLATION, GENERAL

A. Set carpentry to required levels and lines, with members plumb, true to line, cut, and fitted. Fit carpentry to other construction; scribe and cope as needed for accurate fit.

Locate nailers, blocking, and similar supports to comply with requirements for attaching other construction.

B. Where wood-preservative-treated lumber is installed adjacent to metal decking or structural steel, install continuous flexible flashing separator between wood and metal decking. All fasteners shall be stainless steel.

C. Framing Standard: Comply with AF&PA's "Details for Conventional Wood Frame Construction," unless otherwise indicated.

D. Provide blocking and framing as indicated and as required to support facing materials, fixtures, specialty items, and trim.

1. Provide metal clips for fastening gypsum board or lath at corners and intersections where framing or blocking does not provide a surface for fastening edges of panels. Space clips not more than 16 inches (406 mm) o.c.

E. Sort and select lumber so that natural characteristics will not interfere with installation or with fastening other materials to lumber. Do not use materials with defects that interfere with function of member or pieces that are too small to use with minimum number of joints or optimum joint arrangement.

F. Securely attach carpentry work to substrate by anchoring and fastening as indicated, complying with the following:

1. NES NER-272 for power-driven fasteners.
2. Table 2304.9.1, "Fastening Schedule," in ICC's International Building Code.

G. Use common wire nails, unless otherwise indicated. Select fasteners of size that will not fully penetrate members where opposite side will be exposed to view or will receive finish materials. Make tight connections between members. Install fasteners without splitting wood; do not countersink nail heads, unless otherwise indicated.

3.2 WOOD BLOCKING, AND NAILER INSTALLATION

A. Install where indicated and where required for attaching other work. Form to shapes indicated and cut as required for true line and level of attached work. Coordinate locations with other work involved.

B. Attach items to substrates to support applied loading. Recess bolts and nuts flush with surfaces, unless otherwise indicated.

C. Secure all wood nailers and wood blocking at roof perimeter in strict accordance with requirements of SPRI ES 1.

END OF SECTION 061053

SECTION 061600 - SHEATHING

PART 1 - GENERAL

1.1 RELATED DOCUMENTS

A. Drawings and general provisions of the Contract, including General and Supplementary Conditions and Division 1 Specification Sections, apply to this Section.

1.2 SUMMARY

A. Section Includes:

1. Wall sheathing.
2. Parapet sheathing.
3. Soffits
4. Subflooring and underlayment.

1.3 ACTION SUBMITTALS

A. Product Data: For each type of process and factory-fabricated product. Indicate component materials and dimensions and include construction and application details.
   1. Include data for fire-retardant treatment from chemical treatment manufacturer and certification by treating plant that treated plywood complies with requirements. Include physical properties of treated materials.
   2. For products receiving a waterborne treatment, include statement that moisture content of treated materials was reduced to levels specified before shipment to Project site.
   3. Include copies of warranties from chemical treatment manufacturers for each type of treatment.

1.4 INFORMATIONAL SUBMITTALS

A. Evaluation Reports: For following products, from ICC-ES:
   1. Fire-retardant-treated plywood.

1.5 QUALITY ASSURANCE

A. Testing Agency Qualifications: For testing agency providing classification marking for fire-retardant-treated material, an inspection agency acceptable to authorities having jurisdiction that periodically performs inspections to verify that the material bearing the classification marking is representative of the material tested.

1.6 DELIVERY, STORAGE, AND HANDLING

A. Stack panels flat with spacers beneath and between each bundle to provide air circulation. Protect sheathing from weather by covering with waterproof sheeting, securely anchored. Provide for air circulation around stacks and under coverings.

PART 2 - PRODUCTS

2.1 WOOD PANEL PRODUCTS

A. Plywood: Either DOC PS 1 or DOC PS 2 unless otherwise indicated.

B. Thickness: As needed to comply with requirements specified, but not less than thickness indicated.

C. Factory mark panels to indicate compliance with applicable standard.

2.2 FIRE-RETARDANT-TREATED PLYWOOD

A. General: Where fire-retardant-treated materials are indicated, use materials complying with requirements in this article that are acceptable to authorities having jurisdiction and with fire-test-response characteristics specified as determined by testing identical products per test method indicated by a qualified testing agency.

B. Fire-Retardant-Treated Plywood by Pressure Process: Products with a flame-spread index of 25 or less when tested according to ASTM E 84, and with no evidence of significant progressive combustion when the test is extended an additional 20 minutes, and with the flame front not extending more than 10.5 feet (3.2 m) beyond the centerline of the burners at any time during the test.

1. Use treatment that does not promote corrosion of metal fasteners.
2. Interior Type A: Treated materials shall have a moisture content of 28 percent or less when tested according to ASTM D 3201 at 92 percent relative humidity. Use where exterior type is not indicated.
3. Design Value Adjustment Factors: Treated lumber plywood shall be tested according ASTM D 5516 and design value adjustment factors shall be calculated according to ASTM D 6305. Span ratings after treatment shall be not less than span ratings specified.

C. Kiln-dry material after treatment to a maximum moisture content of 15 percent. Do not use material that is warped or does not comply with requirements for untreated material.

D. Identify fire-retardant-treated plywood with appropriate classification marking of qualified testing agency.

E. Application: Treat plywood indicated on Drawings, and the following:
1. Roof Sheathing and telephone/data backboards.

2.3 WALL SHEATHING (and **soffits** as noted on the drawings)

A. Plywood Sheathing: Exterior sheathing (Fire retardant).

1. Span Rating: 32/16
2. Nominal Thickness: Not less than 5/8 inch (15.9 mm) thick.

B. Glass-Mat Gypsum Wall Sheathing: ASTM C 1177/1177M.

1. Products: Subject to compliance with requirements, provide one of the following:

a. CertainTeed Corporation; GlasRoc.
b. G-P Gypsum Corporation; Dens-Glass Gold.
c. Temple-Inland Inc.; GreenGlass
d. United States Gypsum Co.; Securock.

2. Type and Thickness: Type X, 5/8 inch (15.9 mm) thick.
3. Size: 48 by 96 inches (1219 by 2438 mm) for vertical installation.

C. Cementitious backer units (for use where required as substrate for DEFS Systems specified in Section 07420): ANSI A118.9, ASTM A108.11 and ASTM C 1325, provided with manufacturers standard edges

1. Thickness: 5/8" (15.9 mm) thick
2. Size: 48 by 96 for vertical installation
   a. PermaBase® Brand cement board as manufactured by National Gypsum in compliance with ASTM C1325
   b. Durock Brand Cement Board with EdgeGuard by USG

2.4 SUBFLOORING AND UNDERLAYMENT

A. Plywood Combination Subfloor-Underlayment: DOC PS 1, Exterior, Structural I, C-C Plugged single-floor panels.

1. Span Rating: Not less than 32.
2. Nominal Thickness: as noted in the drawings.
3. Edge Detail: Square.

2.5 FASTENERS

A. General: Provide fasteners of size and type indicated that comply with requirements specified in this article for material and manufacture.

1. For plywood, fasteners to be Type 304 stainless steel.

B. Screws for Fastening Wood Structural Panels to Cold-Formed Metal Framing: ASTM C 954, except with wafer heads and reamer wings, length as recommended by screw manufacturer for material being fastened.

C. Screws for Fastening Gypsum Sheathing to Cold-Formed Metal Framing: Steel drill screws, in length recommended by sheathing manufacturer for thickness of sheathing to be attached, with organic-polymer or other corrosion-protective coating having a salt-spray resistance of more than 800 hours according to ASTM B 117.

1. For steel framing less than 0.0329 inch (0.835 mm) thick, use screws that comply with ASTM C 1002.
2. For steel framing from 0.033 to 0.112 inch (0.84 to 2.84 mm) thick, use screws that comply with ASTM C 954.

PART 3 - EXECUTION

3.1 INSTALLATION, GENERAL

A. Do not use materials with defects that impair quality of sheathing or pieces that are too small to use with minimum number of joints or optimum joint arrangement. Arrange joints so that pieces do not span between fewer than three support members.

B. Cut panels at penetrations, edges, and other obstructions of work; fit tightly against abutting construction unless otherwise indicated.

C. Securely attach to substrate by fastening as indicated, complying with the following:
1. Table 2304.9.1, "Fastening Schedule," in ICC's "International Building Code."

D. Do not bridge building expansion joints; cut and space edges of panels to match spacing of structural support elements.

E. Coordinate sheathing installation with installation of materials installed over sheathing so sheathing is not exposed to precipitation or left exposed at end of the workday when rain is forecast.

3.2 WOOD STRUCTURAL PANEL INSTALLATION

A. General: Comply with applicable recommendations in APA Form No. E30, "Engineered Wood Construction Guide," for types of structural-use panels and applications indicated.

B. Fastening Methods: Fasten panels as indicated below:

1. Roof Sheathing:
   a. Screw to cold-formed metal framing.
   b. Space panels 1/8 inch (3 mm) apart at edges and ends.

2. Plywood Subflooring:
   a. Screw to cold-formed metal framing.
   b. Space panels 1/8 inch (3 mm) apart at edges and ends.

3.3 GYPSUM SHEATHING INSTALLATION

A. Comply with GA-253 and with manufacturer's written instructions.
   1. Fasten gypsum sheathing to cold-formed metal framing with screws.
   2. Install boards with a 3/8-inch (9.5-mm) gap where non-load-bearing construction abuts structural elements.
   3. Install boards with a 1/4-inch (6.4-mm) gap where they abut masonry or similar materials that might retain moisture, to prevent wicking.

B. Apply fasteners so heads bear tightly against face of sheathing, but do not cut into facing.

C. Horizontal Installation: Install sheathing with V-grooved edge down and tongue edge up. Interlock tongue with groove to bring long edges in contact with edges of adjacent boards without forcing. Abut ends of boards over centers of studs, and stagger end joints of adjacent boards not less than one stud spacing. Attach boards at perimeter and within field of board to each steel stud.

   1. Space fasteners approximately 8 inches (200 mm) o.c. and set back a minimum of 3/8 inch (9.5 mm) from edges and ends of boards.
   2. For sheathing under stucco cladding, boards may be initially tacked in place with screws if overlying self-furring metal lath is screw-attached through sheathing to studs immediately after sheathing is installed.

D. Vertical Installation: Install board vertical edges centered over studs. Abut ends and edges of each board with those of adjacent boards. Attach boards at perimeter and within field of board to each stud.

   1. Space fasteners approximately 8 inches (200 mm) o.c. and set back a minimum of 3/8 inch (9.5 mm) from edges and ends of boards.
   2. For sheathing under stucco cladding, boards may be initially tacked in place with screws if overlying self-furring metal lath is screw-attached through sheathing to studs immediately after sheathing is installed.

E. Seal sheathing joints as noted in specification section 072726.

END OF SECTION 061600

SECTION 071713 -BENTONITE WATERPROOFING

PART 1 - GENERAL

1.1 RELATED DOCUMENTS

The general provision of the Contract, including General and Supplementary Conditions and General Requirements, apply to the work specified in this section.

1.2 DESCRIPTION OF WORK

The extent of Geotextile/Bentonite Clay waterproofing membrane is shown on the drawings, and more specifically beneath and on the exterior of the sidewalls of all elevator pits and beneath the concrete floor structure and on the exterior of the sidewalls of the below grade Auditorium Room 119.

1.3 RELATED WORK

A. Concrete
B. Masonry
C. Backfill
D. Expansion Joints

1.4 QUALITY ASSURANCE

A. Manufacturer: Provide Geotextile/Bentonite Clay waterproofing membrane produced by a manufacturer with a minimum of 5 years experience in the waterproofing industry.
B. Installer: A firm with a minimum of 2 years experience in installing bentonite clay or other related waterproofing products.

1.5 SUBMITTALS

A. Manufacturer: Submit six copies of product data sheets, specifications, installation instructions and general recommendations for each type of product specified.
B. Installer: Submit detail drawings for installation of product specified.
C. Warranty: Submit specimen of manufacturers' standard warranty.

1.6 WARRANTY

A. Upon completion and acceptance of the work required by this section, the manufacturer will issue a warranty agreeing to promptly replace defective materials for a period of 5 years.

1.7 PRODUCT DELIVERY, STORAGE AND HANDLING

A. Deliver materials in original manufacturer's packaging and store materials in strict accordance with manufacturer's instructions.
B. Remove and replace products that have been prematurely exposed to moisture.

1.8 PROJECT CONDITIONS

A. Install materials in accordance with all safety and weather conditions required by the manufacturer.
B. Install materials only after work on the applicable substrate is complete.

PART 2 – PRODUCTS

2.1 WATERPROOFING SYSTEM

A. Acceptable Manufacturers

1. The Geotextile/Bentonite clay waterproofing membrane shall be MiraCLAY supplied by Henry (Carlisle Coatings & Waterproofing - CCW)

2. Bituthene 3000 by GCP Saint-Gobain.

B. Physical Properties for Geotextile/Bentonite Clay Waterproofing Membrane:

Physical Properties:

Property	Test Method	Value
Bentonite Content	—	1.0 lb./ft^2 (.488 kg/m^2)*
Nominal Dry Thickness	—	0.25 in. (6.4 mm)
Weight	—	75 lb./ft^2 (34.05 kg/m^2)
Permeability	ASTM D 5084	5 x 10^{-9} cm/sec
Grab Tensile Strength	ASTM D 4632	95 lb. (422 N)
Grab Elongation	ASTM D 4632	150%
Puncture Resistance	ASTM D 4833	120 psi (828 kPa)
Hydrated Internal Shear	ASTM D 5321	500 psf (24 kPa)
Swell Index	ASTM D 5890	2g (24 ml) min.
Fluid Loss	ASTM D 5891	18 ml max
		*@ 12% moisture content

C. Waterproofing system accessories supplied by waterproofing membrane manufacturer:
   1) Mastic by bentonite waterproofing manufacturer for terminations and penetrations, and to fill minor voids in concrete and as a fillet in angle changes.
   2) Granules by bentonite waterproofing manufacturer used for horizontal to vertical transitions and for detailing at seams and slab penetrations.
   3) Waterstop by bentonite waterproofing manufacturer used as a waterstop at cold concrete pours and between pre-cast concrete panels.
D. Membrane to Substrate Fasteners: Fasteners, of the type and length suitable for the substrate, shall be used in conjunction with washers, of at least 1" diameter, to attach the geotextile/bentonite clay waterproofing membrane to the substrate.
E. Membrane to Membrane Fasteners: Mechanically fasten membrane sheets together with a box-stapler or similar device for horizontal applications.

F. The Geotextile/Bentonite membrane shall consist of geotextile panels of sodium bentonite clay sandwiched between two layers of needle-punched woven and non-woven polypropylene fabrics.
G. Drainage Composite: Shall be as recommended by the manufacturer for each condition.
H. Perimeter Drainage System: Where required shall be by bentonite waterproofing manufacturer.

PART 3 - EXECUTION

3.1 INSPECTION
A. Examine substrate and condition under which waterproofing will be installed. Do not proceed with the work until unsatisfactory conditions have been corrected.
B. Note: Prior to beginning the below grade work, the contractor shall receive written approval from bentonite manufacturer that the proposed granular fill beneath the areas to receive the bentonite waterproofing are an acceptable substrate or the product. This information shall be forwarded to the architect.

3.2 SURFACE PREPARATION

A. Grade Substrates: Shall be level and uniform that is compacted to a minimum of 85% modified proctor.

B. Concrete Application:
1. Apply mastic to all construction joints at a minimum of 1/4" (7mm) thickness and a 3" (8cm) minimum width.
2. Remove projections from the wall surface in excess of 3/4" (20mm).

3.3 INSTALLATION

A. Prevent geotextile/bentonite clay waterproofing membrane from hydrating before being covered with overburden. When threat of rain is imminent or backfill is not immediate, geotextile/bentonite clay waterproofing membrane should be covered with polyethylene sheeting.

B. Underslab Application: Install per manufacturer's instructions.

C. Concrete Wall Application: Install per manufacturer's instructions.

3.4 PROTECTION AND DRAINAGE
1. Protect the geotextile/bentonite clay waterproofing membrane per manufacturer's instructions.
2. Install drainage components according to the detailed drawings for the specific installation requirements of the project.

END OF SECTION 071713

SECTION 072100 - BUILDING INSULATION

PART 1 - GENERAL

1.1 RELATED DOCUMENTS

A. Drawings and general provisions of the Contract, including General and Supplementary Conditions and Division 1 Specification Sections, apply to this Section.

1.2 SUMMARY

A. Section Includes:

1. Foam-plastic board insulation.
2. Glass-fiber board insulation.
3. Glass-fiber blanket insulation.
4. Mineral-wool board.

1.3 SUBMITTALS

A. Product Data: For each type of product indicated.

B. Product Test Reports: Based on evaluation of comprehensive tests performed by a qualified testing agency, for each product.

C. Research/Evaluation Reports: For foam-plastic insulation, from ICC-ES.

1.4 QUALITY ASSURANCE

A. Surface-Burning Characteristics: As determined by testing identical products according to ASTM E 84 by a qualified testing agency. Identify products with appropriate markings of applicable testing agency.

1.5 DELIVERY, STORAGE, AND HANDLING

A. Protect insulation materials from physical damage and from deterioration due to moisture, soiling, and other sources. Store inside and in a dry location. Comply with manufacturer's written instructions for handling, storing, and protecting during installation.

B. Protect foam-plastic board insulation as follows:

1. Do not expose to sunlight except to necessary extent for period of installation and concealment.

2. Protect against ignition at all times. Do not deliver foam-plastic board materials to Project site before installation time.
3. Quickly complete installation and concealment of foam-plastic board insulation in each area of construction.

PART 2 - PRODUCTS

2.1 FOAM-PLASTIC BOARD INSULATION

A. Extruded-Polystyrene Board Insulation: ASTM C 578, of type and minimum compressive strength indicated below, with maximum flame-spread and smoke-developed indexes of 75 and 450, respectively, per ASTM E 84 and a minimum R-value of 5 per inch.

1. Manufacturers: Subject to compliance with requirements, provide products by one of the following:
   a. Dow Chemical Company (The).
   b. Owens Corning.

2. Type X, 15 psi (104 kPa).

B. Adhesive for Bonding Insulation: Product with demonstrated capability to bond insulation securely to substrates without damaging insulation and substrates.

2.2 GLASS-FIBER BLANKET INSULATION

A. Manufacturers: Subject to compliance with requirements, provide products by one of the following:

1. CertainTeed Corporation.
2. Guardian Building Products, Inc.
3. Johns Manville.
4. Knauf Insulation.
5. Owens Corning.

B. Unfaced, Glass-Fiber Blanket Insulation: ASTM C 665, Type I; with maximum flame-spread and smoke-developed indexes of 25 and 50, respectively, per ASTM E 84; passing ASTM E 136 for combustion characteristics.

2.3 INSULATION FASTENERS

A. Adhesively Attached, Spindle-Type Anchors: Plate welded to projecting spindle; capable of holding insulation of specified thickness securely in position indicated with self-locking washer in place.

1. Products: Subject to compliance with requirements, provide one of the following:

   a. AGM Industries, Inc.; Series T TACTOO Insul-Hangers.

b. Gemco; Spindle Type.

2. Plate: Perforated, galvanized carbon-steel sheet, 0.030 inch (0.762 mm) thick by 2 inches (50 mm) square.
3. Spindle: Copper-coated, low-carbon steel; fully annealed; 0.105 inch (2.67 mm) in diameter; length to suit depth of insulation indicated.

B. Insulation-Retaining Washers: Self-locking washers formed from 0.016-inch- (0.41-mm-) thick galvanized-steel sheet, with beveled edge for increased stiffness, sized as required to hold insulation securely in place, but not less than 1-1/2 inches (38 mm) square or in diameter.

1. Products: Subject to compliance with requirements, provide one of the following:

a. AGM Industries, Inc..
b. Gemco;.

2. Protect ends with capped self-locking washers incorporating a spring steel insert to ensure permanent retention of cap in the following locations:
a. Mechanical rooms

C. Insulation Standoff: Spacer fabricated from galvanized mild-steel sheet for fitting over spindle of insulation anchor to maintain air space as indicated on the drawings between face of insulation and substrate to which anchor is attached.

D. Anchor Adhesive: Product with demonstrated capability to bond insulation anchors securely to substrates indicated without damaging insulation, fasteners, and substrates.

1. Products: Subject to compliance with requirements, provide one of the following:

a. AGM Industries, Inc.; TACTOO Adhesive.
b. Gemco; Tuff Bond Hanger Adhesive.

2.4 MINERAL-WOOL BOARD

A. Mineral-Wool Board, Type II, Unfaced: ASTM C 612, Type II; with maximum flame-spread and smoke-developed indexes of 15 and zero, respectively, per ASTM E 84; passing ASTM E 136 for combustion characteristics. Nominal density of 6 lb/cu. ft. (96 kg/cu. m).

1. Basis-of-Design Product: Subject to compliance with requirements, provide Thermafiber, Inc.; an Owens Corning company; FireSpan 90 or a comparable product by one of the following:

a. Industrial Insulation Group, LLC (IIG-LLC).
b. Roxul Inc.

EXECUTION

2.5 PREPARATION

A. Clean substrates of substances that are harmful to insulation or that interfere with insulation attachment.

2.6 INSTALLATION, GENERAL

A. Comply with insulation manufacturer's written instructions applicable to products and applications indicated.

B. Install insulation that is undamaged, dry, and unsoiled and that has not been left exposed to ice, rain, or snow at any time.

C. Extend insulation to envelop entire area to be insulated. Cut and fit tightly around obstructions and fill voids with insulation. Remove projections that interfere with placement.

D. Provide sizes to fit applications indicated and selected from manufacturer's standard thicknesses, widths, and lengths. Apply single layer of insulation units to produce thickness indicated unless multiple layers are otherwise shown or required to make up total thickness.

2.7 INSTALLATION OF CAVITY-WALL INSULATION

A. Foam-Plastic Board Insulation: Install pads of adhesive spaced approximately 16 inches (405 mm) o.c. both ways on inside face, and as recommended by manufacturer. Fit courses of insulation between wall ties and other obstructions, with edges butted tightly in both directions. Press units firmly against inside substrates.

1. Supplement adhesive attachment of insulation by securing boards with two-piece wall ties designed for this purpose and specified in Division 4 Section "Unit Masonry Assemblies."

2.8 INSTALLATION OF INSULATION FOR FRAMED CONSTRUCTION

A. Apply insulation units to substrates by method indicated, complying with manufacturer's written instructions. If no specific method is indicated, bond units to substrate with adhesive or use mechanical anchorage to provide permanent placement and support of units.

B. Glass-Fiber Blanket Insulation: Install in cavities formed by framing members according to the following requirements:

1. Use insulation widths and lengths that fill the cavities formed by framing members. If more than one length is required to fill the cavities, provide lengths that will produce a snug fit between ends.
2. Place insulation in cavities formed by framing members to produce a friction fit between edges of insulation and adjoining framing members.
3. Maintain 3-inch (76-mm) clearance of insulation around recessed lighting fixtures not rated for or protected from contact with insulation.
4. For metal-framed wall cavities where cavity heights exceed 96 inches (2438 mm), support unfaced blankets mechanically and support faced blankets by taping flanges of insulation to flanges of metal studs.

C. Miscellaneous Voids: Install insulation in miscellaneous voids and cavity spaces where required to prevent gaps in insulation using the following materials:

1. Loose-Fill Insulation: Compact to approximately 40 percent of normal maximum volume equaling a density of approximately 2.5 lb/cu. ft. (40 kg/cu. m).
2. Spray Polyurethane Insulation: Apply according to manufacturer's written instructions.

2.9 INSTALLATION OF INSULATION FOR SUBSTRATES

A. Install board insulation on substrates by adhesively attached, spindle-type insulation anchors as follows:

1. Fasten insulation anchors to substrates with insulation anchor adhesive according to anchor manufacturer's written instructions. Space anchors according to insulation manufacturer's written instructions for insulation type, thickness, and application indicated.
2. Apply insulation standoffs to each spindle to create cavity width indicated between substrate and insulation.
3. After adhesive has dried, install board insulation by pressing insulation into position over spindles and securing it tightly in place with insulation-retaining washers, taking care not to compress insulation below indicated thickness.
4. Where insulation will not be covered by other building materials, apply capped washers to tips of spindles.

2.10 INSTALLATION OF CURTAIN-WALL INSULATION

A. Install board insulation in curtain-wall construction where indicated on Drawings according to curtain-wall manufacturer's written instructions.

1. Hold insulation in place by securing metal clips and straps or integral pockets within window frames, spaced at intervals recommended in writing by insulation manufacturer to hold insulation securely in place without touching spandrel glass. Maintain cavity width of dimension indicated between insulation and glass.
2. Install insulation where it contacts perimeter fire-containment system to prevent insulation from bowing under pressure from perimeter fire-containment system.

2.11 PROTECTION

A. Protect installed insulation from damage due to harmful weather exposures, physical abuse, and other causes. Provide temporary coverings or enclosures where insulation is subject to abuse and cannot be concealed and protected by permanent construction immediately after installation.

END OF SECTION 072100

SECTION 072119 - FOAMED-IN-PLACE INSULATION

PART 1 - GENERAL

1.1 SUMMARY

A. Section Includes:

1. Closed-cell spray polyurethane foam insulation.
2. Accessories.

1.2 ACTION SUBMITTALS

A. Product Data: For each type of product.

1.3 INFORMATIONAL SUBMITTALS

A. Test and Evaluation Reports:

1. Product Test Reports: For each product, for tests performed by qualified testing agency.

B. Field Quality-Control Submittals:

1. Field quality-control reports.

C. Qualification Statements: For Installer.

1.4 QUALITY ASSURANCE

A. Installer Qualifications: An authorized representative who is trained and approved by manufacturer.

PART 2 - PRODUCTS

2.1 CLOSED-CELL SPRAY POLYURETHANE FOAM INSULATION

A. Closed-Cell Spray Polyurethane Foam: ASTM C1029, Type II, minimum density of 1.5 lb/cu. ft. (24 kg/cu. m) and minimum aged R-value at 1-inch (25.4-mm) thickness of 6.2 deg F x h x sq. ft./Btu at 75 deg F (43 K x sq. m/W at 24 deg C).
1. Acceptable Products:
    a) ThermoSeal 2000
    b) Johns Manville

c) Or Prior Approved Equal

2. Surface-Burning Characteristics: Comply with ASTM E84; testing by a qualified testing agency. Identify products with appropriate markings of applicable testing agency.

   a. Flame-Spread Index: 25 or less.
   b. Smoke-Developed Index: 450 or less.

3. Fire Propagation Characteristics: Passes NFPA 285 testing as part of an approved assembly.

2.2 ACCESSORIES

A. Primer: Material recommended by insulation manufacturer where required for adhesion of insulation to substrates.

B. Thermal Barrier: Material barrier intended to prevent flame-source access to foam and delay temperature-rise of foam during a fire event.
   1. Thermal Barrier Coating: Fire-protective intumescent coating formulated for application over polyurethane foam plastics, compatible with insulation, and passes NFPA 275 testing as part of an approved assembly.

   2. Surface-Burning Characteristics: Comply with ASTM E84; testing by a qualified testing agency. Identify products with appropriate markings of applicable testing agency.

      a. Flame-Spread Index: 25 or less.
      b. Smoke-Developed Index: 50 or less.

   3. Topcoat: 8- to 12-mil- (2- to 3-mm-) thick, water-based latex-based paint recommended in writing by intumescent thermal barrier manufacturer as compatible with substrate materials.

PART 3 - EXECUTION

3.1 PREPARATION

A. Verify that substrates are clean, dry, and free of substances that are harmful to insulation.

B. Priming: Prime substrates where recommended by insulation manufacturer. Apply primer to comply with insulation manufacturer's written instructions. Confine primers to areas to be insulated; do not allow spillage or migration onto adjoining surfaces.

3.2 INSTALLATION

A. Comply with insulation manufacturer's written instructions applicable to products and applications.

B. Spray insulation to envelop entire area to be insulated and fill voids.

C. Apply in multiple passes to not exceed maximum thicknesses recommended by manufacturer. Do not spray into rising foam.

D. Framed Construction: Install into cavities formed by framing members to achieve thickness indicated on Drawings.

E. Miscellaneous Voids: Apply according to manufacturer's written instructions.

F. Install thermal barrier material.

1. Do not cover insulation prior to any required spray foam insulation inspections.

G. Apply barrier coatings in accordance with manufacturer's written instructions and to comply with requirements for listing and labeling for fire-propagation characteristics and surface-burning characteristics specified.

1. Use equipment and techniques best suited for substrate and type of material applied as recommended by coating manufacturer.
2. Apply coatings to prepared surfaces as soon as practical after preparation and before subsequent surface soiling or deterioration.
3. Apply coatings to produce surface films without cloudiness, spotting, holidays, laps, brush marks, roller tracking, runs, sags, ropiness, or other surface imperfections. Produce sharp lines and color breaks.

3.3 PROTECTION

A. Protect installed insulation from damage due to harmful weather exposures, physical abuse, and other causes.

END OF SECTION 072119

072420 – DIRECT-APPLIED EXTERIOR FINISH SYSTEM

1.0 GENERAL

1.1 SUMMARY

A. Provide finish for exterior gypsum or cement board soffit and ceiling surfaces.

1.2 SUBMITTALS

A. Product Data: Submit manufacturer's product data and installation instructions for each material and product used. Include manufacturer's Safety Data Sheets.

1.3 REFERENCES

A. ASTM Standards

1. C1177, Standard Specification for Glass Mat Gypsum Substrate for Use as Sheathing

3. E84, Standard Test Method for Surface Burning Characteristics of Building Materials

1.4 QUALITY ASSURANCE

A. Manufacturer's Qualifications: The finish manufacturer shall be a company with at least 30 years of experience in manufacturing acrylic plaster and specialty finishes and regularly engaged in the manufacture and marketing of products specified herein. The manufacturer shall have an ISO 9001:2008 certified quality system and ISO 14001:2004 certified environmental management system.

B. Installer's Qualifications: The contractor shall be qualified to perform the work specified by reason of experience.

C. Mock-ups: The contractor shall install a 10'-0" long fascia and soffit mock-up of the finished wall surface for evaluation and approval by the design professional, building owner, or owner's representative/quality assurance agent.

D. Testing: Testing shall be conducted as directed by the design professional, building owner, or owner's representative/quality assurance agent to verify soffit/ceiling assembly performance and adhesion to prepared substrates.

1.5 DELIVERY, STORAGE AND HANDLING

A. Deliver products in original packaging, labeled with product identification, manufacturer, and batch number.

B. Store products in a dry area with temperature maintained between 50 and 85 degrees F (10 and 29 degrees C). Protect from direct sunlight. Protect from freezing. Protect from extreme heat (>90 degrees F [32 degrees C]).

C. Handle products in accordance with manufacturer's printed instructions.

1.6 WARRANTY

A. Provide manufacturer's standard 10 year unlimited warranty.

PART 2 PRODUCTS

2.1 BASIS OF DESIGN:

A. Sto Corporation, StoQuik Gold Finish System for Soffits and Ceilings

B. Direct-Applied Cement Board MD Finish System by Dryvit

2.2 MATERIALS

A. Finishes, primers, adhesives, stains and any other associated materials used with the finish shall be Class A building materials based on testing in accordance with ASTM E84. VOC (Volatile Organic Content) shall be less than 50g/L and shall comply with South Coast AQMD Rule 1113 requirements.

B. Cement Soffit or Ceiling Board

1. Refer to Sheathing Specification Section 061600 and coordinate compatibility requirements.

C. Surface Reinforcement

1. Sto Mesh – nominal 4.5 oz/yd2 (153 g/m2) glass fiber reinforcing mesh treated for compatibility with Sto materials

2. Dryvit Standard Reinforcing Mesh

D. Base Coat – polymer modified portland cement base coat

1. Sto BTS Plus – one component polymer modified Portland cement high

2. Dryvit Base Coat – Genesis or Primus

E. Textured Finishes

1. Stolit

a. Textured Finishes acrylic based, integrally colored textured finishes

b. Stolit Lotusan® – acrylic based textured wall finish with graded marble aggregate and self-cleaning properties

2. Dryvit

a. Standard DPR

G. Accessories

1. High-movement, low modulus, non-sag one-component silyl-terminated polyether joint sealant in compliance with ASTM C920 by DEFS manufacturer.

2. Corner Bead Standard – one component PVC (polyvinyl chloride) accessory with integral reinforcing mesh for outside corner reinforcement by DEFS manufacturer.

3. Drip Edge Profile - one component PVC (polyvinyl chloride) accessory with integral reinforcing mesh that creates a drip edge and plaster return by DEFS manufacturer.

4. PVC Accessories for DEFS (Direct-Applied Exterior Finish Systems) – Polyvinyl Chloride (PVC) components for exterior use in compliance with ASTM D1784

2.3 PERFORMANCE REQUIREMENTS

1. Primers and applicable finish components: ASTM E84, flame Spread less than 25, smoke developed less than 75, Class A building material

2. Primers and applicable finish components: South Coast AQMD Rule 1113, Volatile Organic Content (VOC), comply with applicable requirement of coating category

PART 3 EXECUTION

3.1 INSTALLATION

A. Cement soffit board must be installed in conformance with the applicable building code and manufacturer's written installation instructions. Cement soffit board surface must be clean, dry, and free of surface contamination. Soffit board surface shall not have planar irregularities in excess of 1/16 inch (1.6 mm) and shall be free of voids, cracks, and other surface defects.

B. Mixing

1. Mix Sto products in accordance with published literature. Refer to applicable Product Bulletins for specific information on use, handling, application, precautions, and limitations of specific products.

C. Application

1. Install per manufacturer's instructions.

D. Protection

1. Provide protection of installed materials from water infiltration into or behind them during and after construction.

2. Provide protection of installed materials from dust, dirt, precipitation, freezing and continuous high humidity until they are fully dry.

3. Seal penetrations through the finished surface with backer rod and sealant or other appropriate means

End of Section 072420

SECTION 072726 - FLUID-APPLIED MEMBRANE AIR BARRIERS

PART 1 - GENERAL

1.1 RELATED DOCUMENTS

A. Drawings and general provisions of the Contract, including General and Supplementary Conditions and Division 01 Specification Sections, apply to this Section.

1.2 SUMMARY

A. Section Includes:
   1. Vapor-permeable, fluid-applied air barriers.

1.3 DEFINITIONS

A. Air-Barrier Material: A primary element that provides a continuous barrier to the movement of air.

B. Air-Barrier Accessory: A transitional component of the air barrier that provides continuity.

C. Air-Barrier Assembly: The collection of air-barrier materials and accessories applied to an opaque wall, including joints and junctions to abutting construction, to control air movement through the wall.

1.4 PREINSTALLATION MEETINGS

A. Preinstallation Conference: Conduct conference at Project site.

   1. Review air-barrier requirements and installation, special details, mockups, air-leakage and bond testing, air-barrier protection, and work scheduling that covers air barriers.

1.5 ACTION SUBMITTALS

A. Product Data: For each type of product.

   1. Include manufacturer's written instructions for evaluating, preparing, and treating each substrate; technical data; dry film thickness; and tested physical and performance properties of products.

B. Shop Drawings: For air-barrier assemblies.

1. Show locations and extent of air-barrier materials, accessories, and assemblies specific to Project conditions.
2. Include details for substrate joints and cracks, counterflashing strips, penetrations, inside and outside corners, terminations, and tie-ins with adjoining construction.
3. Include details of interfaces with other materials that form part of air barrier.

1.6 INFORMATIONAL SUBMITTALS

A. Qualification Data: For Installer

B. Product Certificates: From air-barrier manufacturer, certifying compatibility of air barriers and accessory materials with Project materials that connect to or that come in contact with the barrier.

C. Product Test Reports: For each air-barrier assembly, for tests performed by a qualified testing agency.

D. Field quality-control reports.

1.7 QUALITY ASSURANCE

A. Installer Qualifications: An entity that employs installers **or** supervisors who are trained and approved by manufacturer.

B. Mockups: Build mockups to set quality standards for materials and execution.

1. Build integrated mockups of exterior wall assembly **(refer to masonry specification)** incorporating backup wall construction, external cladding, window, storefront, door frame and sill, insulation, ties and other penetrations, and flashing to demonstrate surface preparation, crack and joint treatment, application of air barriers, and sealing of gaps, terminations, and penetrations of air-barrier assembly.

    a. Coordinate construction of mockups to permit inspection and testing of air barrier before external insulation and cladding are installed.
    b. Include junction with roofing membrane, building corner condition, and foundation wall intersection.
    c. If Architect determines mockups do not comply with requirements, reconstruct mockups and apply air barrier until mockups are approved.

2. Approval of mockups does not constitute approval of deviations from the Contract Documents contained in mockups unless Architect specifically approves such deviations in writing.

1.8 DELIVERY, STORAGE, AND HANDLING

A. Remove and replace liquid materials that cannot be applied within their stated shelf life.

B. Protect stored materials from direct sunlight.

1.9 FIELD CONDITIONS

A. Environmental Limitations: Apply air barrier within the range of ambient and substrate temperatures recommended in writing by air-barrier manufacturer.

1. Protect substrates from environmental conditions that affect air-barrier performance.
2. Do not apply air barrier to a damp or wet substrate or during snow, rain, fog, or mist.

PART 2 - PRODUCTS

2.1 MATERIALS

A. Source Limitations: Obtain primary air-barrier materials and air-barrier accessories from single source from single manufacturer.

2.2 PERFORMANCE REQUIREMENTS

A. Air-Barrier Performance: Air-barrier assembly and seals with adjacent construction shall be capable of performing as a continuous air barrier and as a liquid-water drainage plane flashed to discharge to the exterior incidental condensation or water penetration. Air-barrier assemblies shall be capable of accommodating substrate movement and of sealing substrate expansion and control joints, construction material changes, penetrations, tie-ins to installed waterproofing, and transitions at perimeter conditions without deterioration and air leakage exceeding specified limits.

B. Air-Barrier Assembly Air Leakage: Maximum 0.04 cfm/sq. ft. of surface area at 1.57 lbf/sq. ft. (0.2 L/s x sq. m of surface area at 75 Pa), when tested according to ASTM E 2357.

2.3 HIGH-BUILD AIR BARRIERS, VAPOR PERMEABLE

A. High-Build, Vapor-Permeable Air Barrier: synthetic polymer membrane with an installed dry film thickness, according to manufacturer's written instructions, of 35 mils (0.9 mm) or thicker over smooth, void-free substrates.

1. Synthetic Polymer Type:
   a. Henry Air Bloc 17MR
   b. Grace Perm-A-Barrier VP
   c. Or Prosoco Cat 5

2. Physical and Performance Properties:

a. Air Permeance: Maximum 0.004 cfm/sq. ft. of surface area at 1.57-lbf/sq. ft. (0.02 L/s x sq. m of surface area at 75-Pa) pressure difference; ASTM E 2178.
b. Vapor Permeance: Minimum 10 perms (580 ng/Pa x s x sq. m); ASTM E 96/E 96M, Desiccant Method, Procedure A.
c. Ultimate Elongation: Minimum 200 percent; ASTM D 412, Die C.
d. UV Resistance: Can be exposed to sunlight for 90 days according to manufacturer's written instructions.

2.4 ACCESSORY MATERIALS

A. Requirement: Provide primers, transition strips, termination strips, joint reinforcing fabric and strips, joint sealants, counterflashing strips, flashing sheets and metal termination bars, termination mastic, substrate patching materials, adhesives, tapes, foam sealants, lap sealants, and other accessory materials that are recommended in writing by air-barrier manufacturer to produce a complete air-barrier assembly and that are compatible with primary air-barrier material and adjacent construction to which they may seal.

B. Primer: Liquid primer recommended for substrate by air-barrier material manufacturer.

C. Stainless-Steel Sheet: ASTM A 240/A 240M, Type 304, 0.0250 inch (0.64 mm) thick, and Series 300 stainless-steel fasteners.

D. Preformed Silicone Extrusion: Manufacturer's standard system consisting of cured low-modulus silicone extrusion, sized to fit opening widths, with a single-component, neutral-curing, Class 100/50 (low-modulus) silicone sealant for bonding extrusions to substrates.

PART 3 - EXECUTION

3.1 EXAMINATION

A. Examine substrates, areas, and conditions, with Installer present, for compliance with requirements and other conditions affecting performance of the Work.

1. Verify that substrates are sound and free of oil, grease, dirt, excess mortar, or other contaminants.
2. Verify that substrates have cured and aged for minimum time recommended in writing by air-barrier manufacturer.
3. Verify that substrates are visibly dry and free of moisture.
4. Verify that masonry joints are flush and completely filled with mortar.

B. Proceed with installation only after unsatisfactory conditions have been corrected.

3.2 SURFACE PREPARATION

A. Clean, prepare, treat, fill, and seal substrate and joints and cracks in substrate according to manufacturer's written instructions and details. Provide clean, dust-free, and dry substrate for air-barrier application.

B. Mask off adjoining surfaces not covered by air barrier to prevent spillage and overspray affecting other construction.

C. Remove grease, oil, bitumen, form-release agents, paints, curing compounds, and other penetrating contaminants or film-forming coatings from concrete.

D. Remove fins, ridges, mortar, and other projections and fill honeycomb, aggregate pockets, holes, and other voids in concrete with substrate-patching material.

E. Remove excess mortar from masonry ties, shelf angles, and other obstructions.

F. At changes in substrate plane, apply sealant or termination mastic beads at sharp corners and edges to form a smooth transition from one plane to another.

G. Cover gaps in substrate plane and form a smooth transition from one substrate plane to another with stainless-steel sheet mechanically fastened to structural framing to provide continuous support for air barrier.

H. Bridge isolation joints, expansion joints and discontinuous wall-to-wall, deck-to-wall, and deck-to-deck joints with air-barrier accessory material that accommodates joint movement according to manufacturer's written instructions and details.

3.3 ACCESSORIES INSTALLATION

A. Install accessory materials according to air-barrier manufacturer's written instructions and details to form a seal with adjacent construction and ensure continuity of air and water barrier.

1. Coordinate the installation of air barrier with installation of roofing membrane and base flashing to ensure continuity of air barrier with roofing membrane.
2. Install transition strip on roofing membrane or base flashing so that a minimum of 3 inches (75 mm) of coverage is achieved over each substrate.
3. Unless manufacturer recommends in writing against priming, apply primer to substrates at required rate and allow it to dry.
4. Apply primer to substrates at required rate and allow it to dry. Limit priming to areas that will be covered by air-barrier material on same day. Reprime areas exposed for more than 24 hours.

B. Connect and seal exterior wall air-barrier material continuously to roofing-membrane air barrier, concrete below-grade structures, floor-to-floor construction, exterior glazing and window systems, glazed curtain-wall systems, storefront systems, exterior louvers, exterior door framing, and other construction used in exterior wall openings, using accessory materials.

C. At end of each working day, seal top edge of strips and transition strips to substrate with termination mastic.

D. Apply joint sealants forming part of air-barrier assembly within manufacturer's recommended application temperature ranges. Consult manufacturer when sealant cannot be applied within these temperature ranges.

E. Wall Openings: Prime concealed, perimeter frame surfaces of windows, curtain walls, storefronts, and doors. Apply transition strip so that a minimum of 3 inches (75 mm) of coverage is achieved over each substrate. Maintain 3 inches (75 mm) of full contact over firm bearing to perimeter frames, with not less than 1 inch (25 mm) of full contact..

1. Transition Strip: Roll firmly to enhance adhesion.

F. Fill gaps in perimeter frame surfaces of windows, curtain walls, storefronts, and doors, and miscellaneous penetrations of air-barrier material with foam sealant.

G. Seal strips and transition strips around masonry reinforcing or ties and penetrations with termination mastic.

H. Seal top of through-wall flashings to air barrier with an additional 6-inch- (150-mm-) wide, transition strip.

I. Seal exposed edges of strips at seams, cuts, penetrations, and terminations not concealed by metal counterflashings or ending in reglets with termination mastic.

J. Repair punctures, voids, and deficient lapped seams in strips and transition strips. Slit and flatten fishmouths and blisters. Patch with transition strips extending 6 inches (150 mm) beyond repaired areas in strip direction.

3.4 PRIMARY AIR-BARRIER MATERIAL INSTALLATION

A. Apply air-barrier material to form a seal with strips and transition strips and to achieve a continuous air barrier according to air-barrier manufacturer's written instructions and details. Apply air-barrier material within manufacturer's recommended application temperature ranges.

1. Unless manufacturer recommends in writing against priming, apply primer to substrates at required rate and allow it to dry.
2. Limit priming to areas that will be covered by air-barrier material on same day. Reprime areas exposed for more than 24 hours.
3. Where multiple prime coats are needed to achieve required bond, allow adequate drying time between coats.

B. Air Barriers: Apply continuous unbroken air-barrier material to substrates according to the following thickness. Apply air-barrier material in full contact around protrusions such as masonry ties.
1. Vapor-Permeable, High-Build Air Barrier: Total dry film thickness [as recommended in writing by manufacturer to comply with performance requirements, applied in

one or more equal coats. Apply additional material as needed to achieve void- and pinhole-free surface

C. Medium-Build Air Barriers: Apply continuous unbroken air-barrier material to substrates according to the following thickness. Apply an increased thickness of air-barrier material in full contact around protrusions such as masonry ties.

D. Do not cover air barrier until it has been tested and inspected by testing agency.

E. Correct deficiencies in or remove air barrier that does not comply with requirements; repair substrates and reapply air-barrier components.

3.5 CLEANING AND PROTECTION

A. Protect air-barrier system from damage during application and remainder of construction period, according to manufacturer's written instructions.

1. Protect air barrier from exposure to UV light and harmful weather exposure as recommended in writing by manufacturer. If exposed to these conditions for longer than recommended, remove and replace air barrier or install additional, full-thickness, air-barrier application after repairing and preparing the overexposed materials according to air-barrier manufacturer's written instructions.
2. Protect air barrier from contact with incompatible materials and sealants not approved by air-barrier manufacturer.

B. Clean spills, stains, and soiling from construction that would be exposed in the completed work using cleaning agents and procedures recommended in writing by manufacturer of affected construction.

C. Remove masking materials after installation.

END OF SECTION 072726

074213 – METAL WALL PANELS

PART 1 - GENERAL

1.1 SECTION INCLUDES

A. Foamed-in-Place steel, insulated metal wall panels

B. Accessories including fasteners and perimeter trim

1.2 ADMINISTRATIVE REQUIREMENTS

A. Pre-installation meeting: Conduct a pre-installation meeting at the job site attended by Owner, Architect, Manufacturer's Technical Representative, Panel Installer, and Contractors of related trades. Coordinate structural support requirements in relation to insulated wall panel system, installation of any separate air/water barriers, treatment of fenestration, and other requirements specific to the project.

1.3 SUBMITTALS

A. Refer to Specification Section "Submittal Procedures".

B. Product Data: Submit manufacturer current technical literature for each type of product.

C. Shop Drawings: Submit detailed drawings showing:

1. Profile
2. Gauge of both exterior and interior sheet
3. Location, layout and dimensions of panels
4. Location and type of fasteners
5. Shape and method of attachment of all trim
6. Locations and type of sealants
7. Installation sequence
8. Coordination Drawings: Provide elevation drawings and building sections which show panels in relationship to required locations for structural support. Include panel details and details showing attachment to structural support.
9. Other details as may be required for a weathertight installation

D. Panel Analysis: Provide panel calculations to verify panels will withstand the design wind loads indicated without detrimental effects or deflection exceeding the specified limit. Include effects of thermal differential between the exterior and interior panel facings and resistance to fastener pullout.

E. Samples: Provide nominal 3 x 5 feet of each color indicated.

F. Submit N.O.A. documentation that manufacturer has been accepted and insulated metal panels are rated for use in High Velocity Hurricane Zone by Miami-Dade County, Florida.

G. Quality Assurance Submittals

1. Design Data, Test Reports: Provide manufacturer test reports indicating product compliance with requirements.

a. Provide test report from nationally recognized testing agency to demonstrate compliance with IBC Section 1403.2.

2. Manufacturer Erection Instructions: Provide manufacturer's written installation instructions including proper material storage, material handling, and maintenance instructions.

1.4 QUALITY ASSURANCE

A. Manufacturer Qualifications:

1. Manufacturer shall have a minimum of five (5) years experience in the production of insulated metal wall panels. Manufacturer shall demonstrate past experience with examples of projects of similar type and exposure.
2. Manufacturer to be registered with a Program Operator with a Certified Environmental Product Declaration, in conformance with ISO 14025, for Insulated Metal Panels.

B. Installer Qualifications:

1. Installer shall be authorized by the manufacturer and the work shall be supervised by a person having successfully completed a manufacturer training seminar regarding proper installation of the specified product.

1.5 DELIVERY, STORAGE AND HANDLING

A. Deliver panel materials and components in manufacturer's original, unopened, undamaged packaging with identification labels intact.

B. Store wall panel materials on dry, level, firm, and clean surface. Stack no more than two bundles high. Elevate one end of bundle to allow moisture run-off, cover and ventilate to allow air to circulate and moisture to escape.

1.6 WARRANTY

A. Panel Finish Warranty: Submit Manufacturer's limited warranty on the exterior paint finish for adhesion to the metal substrate and limited warranty on the exterior paint finish for chalk and fade.

B. Finish Warranty: Standard form in which manufacturer agrees to repair or replace metal panels that evidence deterioration of fluoropolymer finish, including flaking or peeling from approved primed metal substrate, chalk in excess, and/or color fading.

1. Warranty Period: Five (5) years from date of Substantial Completion.

C. Thermal Warranty: Standard form in which manufacturer agrees to repair or replace panels that exhibit greater than 10% reduction from published material R-value at time of manufacture as measured in accordance with ASTM C518 within specified warranty period.

1. Warranty Period: Thirty (30) years from date of Substantial Completion or 30 years and 3 months from date of shipment from manufacturer's plant, whichever occurs first.

PART 2 - PRODUCTS

2.1 MANUFACTURER

A. Basis of Design: Kingspan Benchmark - Designwall 4000 Flat Panel

B. Centria - Formawall Dimension Series

C. Metl-Span CF Architectural Wall Panel

2.2 EXTERIOR WALL PANELS

A. Design Criteria:

1. Wind Loads: As indicated on Drawings
2. Deflection criteria shall be L/180.

B. Performance Criteria:

1. Structural Test:

a. Static: Structural performance shall be verifiable by witnessed structural testing for simulated wind loads in accordance with ASTM E72 or ASTM E330.
b. Cyclic: Tested constructions meet the approval criteria of FM 4881 when installed as specified in the listing.

2. Bond Strength: No metal primer interface corrosion and/or delamination shall occur after 1000 hours at 135 degrees F and 100 percent relative humidity. No delamination shall occur after 2-1/2 hours in a 2 psi 218 degrees F autoclave.
3. Water Penetration:

    a. Dynamic: There shall be no uncontrolled water leakage when tested in accordance with AAMA 501.1 at a pressure differential of 15 psf.
    b. Static: No uncontrolled water leakage, when tested in accordance with ASTM E331 at a [6.24 psf] [20 psf] pressure differential.
    c. Static – 2 hour duration: Panel system shall demonstrate no water penetration when tested in accordance with ASTM E331 at 6.24 psf pressure differential for a two (2) hour duration to satisfy International Building Code, Section 1403.2.

4. Air Infiltration: Air infiltration through the panel shall not exceed 0.01 cfm/sf at 6.24 psf air pressure differential when tested in accordance with ASTM E283.
5. Water Absorption: There shall be no more than 0.72 pcf water absorption based on 3 x 2 x 0.5 inch foamed-in-place insulated metal wall panel samples subjected to a 24-hour full water submersion in accordance with ASTM C272.
6. Thermal Performance: QuadCore hybrid polyisocyanurate (POLYISO) panel core shall provide the following R-Values as tested in accordance with ASTM C518 at 75°F mean temperature:
    a. 2 inch thick Flat: R-16
    b. 2.5 inch thick Flat: R-20
    c. **3 inch thick Flat: R-24**
    d. 4 inch thick Flat: R-32
7. Fire Test Response Characteristics: Steel-faced panels with QuadCore hybrid polyisocyanurate (POLYISO) core shall fully comply with Chapter 26 of International Building Code regarding the use of Foam Plastic. The following tests shall be available upon request for submission to the Authority Having Jurisdiction:

    a. FM 4880: Class I rated per FM Global, panels are approved for use without a thermal barrier and do not create a requirement for automatic sprinkler protection.
    b. FM 4882: Class I rated per FM Global for smoke sensitive occupancies.
    c. Surface burning characteristics of unfaced foam core when tested in accordance with ASTM E84:
        1) Flame Spread: 25
        2) Smoke Developed: 90
    d. NFPA 285 Intermediate Scale Multi-story Fire Evaluation; successfully passed acceptance criteria when installed per listed assemblies.
    e. ASTM D1929 Minimum Flash and Self Ignition; established for foam core.
        1) Self-Ignition: 1050 degrees F, minimum
        2) Flash Ignition: 1030 degrees F, minimum

    f. NFPA 259 Potential Heat Content; established for foam core: 12,063 BTU/lb.
    g. CAN/ULC S102, S134, S138 fire test standards; successfully passed.

8. Insulating Core: QuadCore hybrid polyisocyanurate (POLYISO) foamed-in-place core, ASTM C591 Type IV, CFC and HCFC free, Halogenated Flame Retardant (HFR)

free, compliant with Montreal Protocol and Clean Air Act, with the following minimum physical properties:

a. Density Nominal per ASTM D1622: 2.4 pcf
b. Shear Strength per ASTM C273: 22 psi
c. Compressive Strength per ASTM C1621: 47 psi
d. Tensile Strength per ASTM D1623: 21 psi
e. Closed Cell Content per ASTM D6226: 95 percent

C. Exterior Paint Finish Characteristics for Panels meeting the requirements of AAMA 621 for G90 galvanized steel or AZ50 Galvalume® :

1. Gloss: 15 ± 5 measured at 60 degree angle tested in accordance with ASTM D523.
2. Pencil Hardness: HB-H minimum tested in accordance with ASTM D3363.
3. Flexibility, T-Bend: 1-2T bend with no adhesion loss when tested in accordance with ASTM D4145.
4. Flexibility, Mandrel: No cracking when bent 180 degrees around a 1/8 mandrel as tested in accordance with ASTM D522.
5. Adhesion: No adhesion loss tested in accordance with ASTM D3359.
6. Reverse Impact: No cracking or adhesion loss when impacted 3000 x inches of metal thickness (lb-in), tested in accordance with ASTM D2794.
7. Abrasion Resistance: Nominal 65 liters of falling sand to expose 5/32 inch diameter of metal substrate when tested in accordance with ASTM D968.
8. Graffiti Resistance: Minimal effect.
9. Acid Pollutant Resistance: No effect when subjected to 30 percent sulfuric acid for 18 hours, or 10 percent muriatic acid for 15 minutes when tested in accordance with ASTM D1308.
10. Salt Fog Resistance: Passes 1000 hours, when tested in accordance with ASTM B117 (5 percent salt fog at 95 degrees F).
11. Cyclic Salt Fog and UV Exposure: Passes 2016 hours when tested in accordance with ASTM D5894.
12. Humidity Resistance: Passes 1500 hours at 100 percent relative humidity and 95 degrees F, with a test rating of 10 when tested in accordance with ASTM D2247 and D714.
13. Color Retention: Passes 5000 hours when tested in accordance with ASTM G153 and G154.
14. Chalk Resistance: Maximum chalk is a rating of 8 when tested in accordance with ASTM D4214, Method A.
15. Color Tolerances: Maximum of 5ΔE Hunter units on panels when tested in accordance with ASTM D2244.

D. Panel Assembly:

1. Panel thickness: 3 inches thick.
2. Panel width (Flat Panels): As indicated on drawings
3. Panel joint shall consist of fasteners and attachment clip completely concealed within the joint. Panel joint shall have two distinct lines of defense against water infiltration using continuous finned rubber gasket seal on face and factory wet butyl seal on liner sheet. Horizontal panels shall have a nominal gutter height of 3 1/4 inches.

4. Exterior Face of Panel:

    a. Material:

        1) Steel coil material shall be in accordance with ASTM A755 Grade 33, G90 galvanized steel.
        2) Gauge: 22 (steel)

    b. Profile: Flat

        1) Flat profile to have no flutes, planking, or mild profiling of any type. Reveal width shall be as indicated on the Drawings.

    c. Exterior Texture: Smooth

    d. Exterior Paint Finish Color:

        1) As selected from current complete line of Kingspan Insulated Panels colors.

        2) Finish System:
            a) 2.4 mil. Fluropolymer (PVDF) Three Coat system: 0.8 mil primer with 0.8 mil Kynar 500 (70 percent) SOLID color coat and 0.8 mil clear coat.

5. Interior Face of Panel:

    a. Material:

        1) Steel coil material shall be Grade 33, G90 galvanized steel in accordance with ASTM A653 and A924
        2) Gauge: 24 (steel)

    b. Profile: Standard flat, non-profiled
    c. Texture: Smooth
    d. Interior Finish: Modified polyester finish with a total minimum dry film thickness of 0.9 to 1.1 mil including primer.

        1) Color: Standard USDA Imperial White

6. Insulating Core: Core material shall be QuadCore hybrid polyisocyanurate foamed-in-place during panel manufacture to a nominal in-place density of 2.4 pcf.

2.3 ACCESSORIES

A. Fasteners: Fasteners as recommended by manufacturer.

B. Clips: Shall be minimum 14 gauge half-hard type 301 stainless steel with PVC or neoprene foam sealing pad adhered to underside of clip, designed to prevent water infiltration around fastener penetrations.

C. Perimeter Trim:

1. Fabricated perimeter trim and metal flashing: Shall be same gauge, material and coating color as exterior face of insulated metal wall panel.
2. Extruded perimeter trim: Shall be extruded aluminum 6063-T5 alloy with spray applied PVF coating in same color as exterior face of insulated metal wall panel.

D. Butyl Weather Barrier Sealant: Non-skinning butyl tube sealant per panel manufacturer's recommendations compliant with AAMA 809.2.

E. Vertical joint gasket (for horizontal panel applications):

1. Material:[Extruded Fire-Retardant TPE rubber gasket shall have a finned profile. Vertical joint gasket shall give the appearance of a recessed and tooled caulk joint and be capable of accommodating joint width variations from 3/8 to 3/4 inch due to normal construction tolerances
2. Color: Custom color gasket, non-metallic, to match panel color

F. Sealants at exposed joints: Neutral cure silicone sealant compliant with ASTM C920.

PART 3 - EXECUTION

3.1 EXAMINATION

A. Provide field measurements to manufacturer as required to achieve proper fit of the preformed wall panel envelope. Measurements shall be provided in a timely manner so that there is no impact to construction or manufacturing schedule.

B. Supporting Steel: All structural supports required for installation of panels shall be by others. Support members shall be installed within the following tolerances:

1. Plus or minus 1/8 inch in 5 feet in any direction along plane of framing.
2. Plus or minus 1/4 inch cumulative in 20 feet in any direction along plane of framing.
3. Plus or minus 1/2 inch from framing plane on any elevation.
4. Plumb or level within 1/8 inch at all changes of transverse for performed corner panel applications.
5. Verify that bearing support has been provided behind vertical joints of horizontal panel systems and vertical joints of horizontal panel systems. Width of support shall be as recommended by manufacturer.

C. Examine individual panels upon removing from the bundle; notify manufacturer of panel defects. Do not install defective panels.

3.2 PANEL INSTALLATION

A. Installation shall be in accordance with manufacturer's installation guidelines and recommendations.

B. Install panels plumb, level, and true-to-line to dimensions and layout indicated on approved shop drawings.

C. Cut panels prior to installing, where indicated on shop drawings, using a power circular saw with fine tooth carbide tip blade per manufacturer's instructions. Ventilate area where polyurethane dust is generated. Personnel should wear respiratory and eye protection devices.

D. Butyl Weather Barrier Sealant:

1. Apply non-skinning butyl sealant as shown on shop drawings and manufacturer's installation instructions as necessary to establish the vapor barrier for the panels.
2. Use non-skinning butyl tube sealant only for tight metal-to-metal contact.
3. Do not use non-skinning butyl tube sealant to bridge gaps.

E. Place panel fasteners through pre-punched holes in attachment clips, concealed within the joint of the panel. Secure units to the structural supports. Space clips as recommended by manufacturer or otherwise indicated on the approved shop drawings.

3.3 TRIM INSTALLATION

A. Place trim and trim fasteners only as indicated per details on the approved shop drawings.

B. Field drill weep holes where appropriate in horizontal trim; minimum 1/4 inch diameter at 24 inches on center.

C. Place a continuous strip of butyl tape or butyl tube sealant on closure trims for the length of the panel to be covered by trim.

3.4 SEALANT INSTALLATION FOR EXPOSED JOINTS

A. Clean and prime surfaces to receive exterior exposed sealants in accordance with sealant manufacturer's recommendations.

B. Follow sealant manufacturer's recommendations for joint width-to-depth ratio, application temperature range, size and type of backer rod, and compatibility of materials for adhesion.

C. Direct contact between butyl and silicone sealants shall not be permitted.

3.5 FIELD QUALITY CONTROL

A. Testing Agency: General Contractor shall engage an independent testing and inspection agency acceptable to the architect to perform field tests and inspections and to prepare reports of findings.

B. Field Water Test: After completing portion of metal wall panel assembly including accessories and trim, test a 2-bay area selected by the architect for water penetration in accordance with AAMA 501.2 or ASTM E1105.

3.6 CLEANING AND PROTECTION

A. Remove protective film immediately after installation.

B. Touch-up, repair or replace metal panels and trim that have been damaged.

C. After metal wall panel installation, clear weep holes and drainage channels of obstructions, dirt, and sealant.

END OF SECTION

SECTION 075216 - STYRENE-BUTADIENE-STYRENE (SBS) MODIFIED BITUMINOUS MEMBRANE ROOFING

PART 1 - GENERAL

1.1 RELATED DOCUMENTS

A. Drawings and general provisions of the Contract, including General and Supplementary Conditions and Division 01 Specification Sections, apply to this Section.

1.2 SUMMARY

A. Section Includes:

1. Styrene-butadiene-styrene (SBS) modified bituminous membrane roofing.
2. Roof insulation.

1.3 DEFINITIONS

A. Roofing Terminology: See ASTM D 1079 and glossary of NRCA's "The NRCA Roofing and Waterproofing Manual" for definition of terms related to roofing work in this Section.

1.4 PERFORMANCE REQUIREMENTS

A. General Performance: Installed membrane roofing and base flashings shall withstand specified uplift pressures, thermally induced movement, and exposure to weather without failure due to defective manufacture, fabrication, installation, or other defects in construction. Membrane roofing and base flashings shall remain watertight.

B. Material Compatibility: Provide roofing materials that are compatible with one another under conditions of service and application required, as demonstrated by membrane roofing manufacturer based on testing and field experience.

C. Roofing System Design: Provide membrane roofing system that is identical to systems that have been successfully tested by a qualified testing and inspecting agency to resist uplift pressure calculated according to ASCE/SEI 7.

1. Corner Uplift Pressure: 225.2 pounds per square foot
2. Perimeter Uplift Pressure: 149.2 pounds per square foot
3. Field-of-Roof Uplift Pressure: 89.2 pounds per square foot

D. FM Approvals Listing: Provide membrane roofing, base flashings, and component materials that comply with requirements in FM Approvals 4450 and FM Approvals 4470 as part of a membrane roofing system, and that are listed in FM Approvals' "RoofNav" for Class 1 or noncombustible construction, as applicable. Identify materials with FM Approvals markings.

1. Fire/Windstorm Classification: Class 1A-90
2. Hail Resistance Rating: MH.

1.5 SUBMITTALS

A. Product Data: For each type of product indicated.

B. Shop Drawings: For roofing system. Include plans, elevations, sections, details, and attachments to other work.

1. Base flashings and membrane terminations.
2. Tapered insulation, including slopes.
3. Crickets, saddles, and tapered edge strips, including slopes.
4. Insulation fastening patterns for corner, perimeter, and field-of-roof locations.

C. Samples for Verification: For the following products:

1. Sheet roofing materials, including roofing membrane sheet, membrane cap sheet and flashing sheet, of color specified.
2. Roof insulation.
3. 3 lb (1.5 kg) of aggregate surfacing material in gradation and color indicated.
4. Walkway pads or rolls.
5. Six insulation fasteners of each type, length, and finish.

D. Qualification Data: For qualified Installer.

E. Manufacturer Certificates: Signed by roofing manufacturer certifying that roofing system complies with requirements specified in "Performance Requirements" Article.

1. Submit evidence of complying with performance requirements.

F. Product Test Reports: Based on evaluation of comprehensive tests performed by manufacturer and witnessed by a qualified testing agency, for components of membrane roofing system.

G. Research/Evaluation Reports: For components of membrane roofing system, from the ICC-ES.

H. Maintenance Data: For roofing system to include in maintenance manuals.

I. Warranties: Sample of manufacturer and contractor warranties.

1.6 QUALITY ASSURANCE

A. Manufacturer Qualifications: A qualified manufacturer that is FM approved for membrane roofing system identical to that used for this Project.

B. Installer Qualifications: A qualified firm that is approved, authorized, or licensed by membrane roofing system manufacturer to install manufacturer's product and that is eligible to receive manufacturer's special warranty.

C. Source Limitations: Obtain components including roof insulation and fasteners for membrane roofing system approved by membrane roofing manufacturer.

D. Fire-Resistance Ratings: Where indicated, provide fire-resistance-rated roof assemblies identical to those of assemblies tested for fire resistance per ASTM E 119 by a qualified testing agency. Identify products with appropriate markings of applicable testing agency.

E. Preliminary Roofing Conference: Before starting roof deck construction, conduct conference at Project site. The agenda for the preliminary roofing conference has been attached following the conclusion of this specification section.
   1. The Contractor shall submit the documents below prior to the mandatory Preliminary Roofing Conference:
      a. Draft Roof Warranty (from both Manufacturer and Contractor)
      b. Roof Assembly Letter
      c. Adhesive or fastener pattern
      d. Letter from manufacturer confirming the roofer is an approved applicator.

F. Pre-installation Roofing Conference: Conduct conference at Project site once all materials are present on site.

   1. Review FP & C Roofing Conference Agenda for requirements.

   2. Meet with Owner, Architect, Owner's insurer if applicable, testing and inspecting agency representative, roofing Installer, roofing system manufacturer's representative, deck Installer, and installers whose work interfaces with or affects roofing, including installers of roof accessories and roof-mounted equipment.
   3. Review methods and procedures related to roofing installation, including manufacturer's written instructions.
   4. Review and finalize construction schedule and verify availability of materials, Installer's personnel, equipment, and facilities needed to make progress and avoid delays.
   5. Examine deck substrate conditions and finishes for compliance with requirements, including flatness and fastening.
   6. Review structural loading limitations of roof deck during and after roofing.
   7. Review base flashings, special roofing details, roof drainage, roof penetrations, equipment curbs, and condition of other construction that will affect roofing system.
   8. Review governing regulations and requirements for insurance and certificates if applicable.
   9. Review temporary protection requirements for roofing system during and after installation.
   10. Review roof observation and repair procedures after roofing installation.

1.7 DELIVERY, STORAGE, AND HANDLING

A. Deliver roofing materials to Project site in original containers with seals unbroken and labeled with manufacturer's name, product brand name and type, date of manufacture, approval or listing agency markings, and directions for storing and mixing with other components.

B. Store liquid materials in their original undamaged containers in a clean, dry, protected location and within the temperature range required by roofing system manufacturer. Protect stored liquid material from direct sunlight.

1. Discard and legally dispose of liquid material that cannot be applied within its stated shelf life.

C. Protect roof insulation materials from physical damage and from deterioration by sunlight, moisture, soiling, and other sources. Store in a dry location. Comply with insulation manufacturer's written instructions for handling, storing, and protecting during installation.

D. Handle and store roofing materials and place equipment in a manner to avoid permanent deflection of deck.

1.8 PROJECT CONDITIONS

A. Weather Limitations: Proceed with installation only when existing and forecasted weather conditions permit roofing system to be installed according to manufacturer's written instructions and warranty requirements.

1.9 WARRANTY

A. Special Warranty: The Roofing Manufacturer's Guarantee/Warranty shall guarantee at the manufacturer's own cost and expense, to make or cause to be made such repairs to/replacement of, to correct any and all faulty installations or materials of the roofing system, to keep the roofing system in a watertight condition throughout the guarantee period. The guarantee shall not be prorated. The Manufacturer's specific exclusions shall be itemized, reviewed and approved by the Owner prior to signing the contract with the approved General Contractor. The fully executed guarantee shall be delivered to the Architect in three original counterparts prior to Final Acceptance of the Work. Signature by Facility Planning & Control shall not be a condition of a valid guarantee. All riders or attachments noting changes to the original guarantee shall be so noted on the face of the original guarantee.

1. Special warranty includes membrane roofing, base flashings, roof insulation, fasteners, cover boards, substrate board, roofing accessories, manufacturer's expansion joints, manufacturer's edge metal and other components of membrane roofing system as specified in Sections 076200 and 077100.
2. Warranty Period: 20 years from date of Substantial Completion.

B. Special Project Warranty: Submit roofing Installer's warranty, on warranty form in this specification, signed by Installer, covering the Work of this Section, including all components of membrane roofing system such as membrane roofing, base flashing, roof insulation, fasteners, cover boards, substrate boards, vapor retarders, walkway products, manufacturer's expansion joints, manufacturer's edge metal and other components of membrane roofing system as specified in Sections 076200 and 077100 for the following warranty period:

1. Warranty Period: Two years from date of Substantial Completion.

C. Special Warranty: Contractor shall provide a special warranty for roofing installation under unit pavers at the 2nd and 3rd floor balconies. This warranty shall include a waterproofing "Overburden Removal" to remove the pavers and replace or repair waterproofing in case of a leak underneath the pavers.

1. Warranty Period: Two years from date of Substantial Completion.

D. Refer to the attached state mandated warranty forms included following the conclusion of this specification section.

PART 2 - PRODUCTS

2.1 SBS-MODIFIED ASPHALT-SHEET MATERIALS

A. SBS-Modified Bituminous Membrane Roofing – Cap Sheet, Interply and Flashing:

1. Manufacturers: Subject to compliance with requirements, provide products by one of the following:

A. <u>Certainteed Commercial Roofing</u>:

Field Plies:
Cap Sheet: Flintlastic FR-P Cap Sheet (168 mils; weight 100 lbs. per one square roll; with a polyester mat)
Interply: Flintlastic Ultra Poly SMS Base Sheet (148 mils; weight 89 lbs. per one square roll; with a polyester mat)

Heat Fused Granular Flashing Plies:
Cap Ply: Flintlastic GTS-FR (160 mils; weight 103 lbs. per one square roll; with a polyester mat)
Stripping Ply: Flintlastic Ultra Poly SMS Base Sheet (148 mils; weight 89 lbs. per one square roll; with a polyester mat)

Cold Adhesive: Flintbond SBS Modified Bitumen Adhesive, Brush Grade

B. <u>Johns Manville Corporation</u>:

Field Plies:
Cap Sheet: DynaGlas FR (3.8 mm thick, weight 95 lbs per square; with Fiberglass Mat).
Interply: DynaLastic 180 S (3.0 mm thick; weight 90 lbs per square; with Polyester reinforcement).

Heat Fused Granular Flashing Plies:
Cap Ply: Dynaweld Cap FR (165 mils/4.2 mm thick; weight 106 lbs. per one square roll; with fiberglass reinforcement mat).
Stripping Ply: Dynaweld 180S (118 mils/3.0 mm thick; weight 86 lbs. per one square roll; with polyester mat with bidirectional glass-scrim reinforcement)

Cold adhesive: MBR

C. Polyglass U.S.A. Inc.:

Field Plies:
Cap Sheet: Elastoflex S6G FR (157 mils/4.0 mm thick; weight 102 lbs. per roll; with reinforced polyester reinforcement).
Interply: Elastoflex V (120 mils/3.0 mm thick; weight 84 lbs. per roll; with glass fiber reinforcement).

Heat Fused Granular Flashing Plies:
Cap Ply: Elastoflex S6 FR (157 mils/4.0 mm thick; weight 102 lbs. per roll; with a reinforced polyester reinforcement).
Stripping Ply (Non-combustible substrates): Elastoflex V (120 mils/3.0 mm; weight 84 lbs. per roll; with glass fiber reinforcement).
Stripping Ply (Combustible substrates): Elastoflex SA V (80 mils/2.0mm; weight 95 lbs. per roll; with a glass fiber reinforcement).

Cold adhesive: PG 350 or PolyPlus 35 Modified Bitumen Adhesive

D. Siplast Inc.:

Field Plies:
Cap Sheet: Paradiene 30 FR (98 mils/2.5mm thick; weight 90 lbs. per square; with fiberglass mat).
Interply: Paradiene 20 EG (3.0 mm thick; weight 84 lbs. per square; with fiberglass scrim/fiberglass mat).

Heat Fused Granular Flashing Plies:
Cap Ply: Parafor 30 TG (161 mils/ 4.1 mm thick; weight 114 lbs. per square; with a fiberglass scrim/polyester mat composite).
Stripping Ply (Non-combustible substrates): Paradiene 20 TG (114 mils/2.9mm; weight 76 lbs. per square; with fiberglass mat).
Stripping Ply (Combustible substrates): Paradiene 20 SA (102 mils/2.6mm; weight 72 lbs. per square; with a fiberglass mat).

Cold adhesive: PA-311

E. SOPREMA, Inc.:

Field Plies:
Cap Sheet: Sopralene 180 Granules FR; (160 mils/4.0 mm thick, weight 108 lbs per square; polyester reinforced).
Interply: Sopralene 180 sanded 2.2, polyester reinforced (90 mils/2.2 mm thick, 58 lbs. per square).

Heat Fused Granular Flashing Plies:
Cap Ply: Sopralene Flam 180 FR GR; (157 mils/4.0mm thick, weight 118 lbs. per one square roll; with a non-woven polyester mat)

Stripping Ply: Sopralene Flam 180; (118 mils/3.0mm thick, weight 81 lbs. per one square roll; with a non-woven polyester mat)

Cold Adhesive: Colply

F. U. S. Ply, Inc.:

Field Plies:
Cap Sheet: Duraflex 190FR SBS (170 mils/4.3 mm thick; weight 105 lbs per square; with a non-woven polyester mat).
Interply: Duraflex 190S SBS (120 mils/3.0 mm thick; weight 88 lbs per square; with a non-woven polyester mat).

Heat Fused Granular Flashing Plies:
TBD

Cold Adhesive: 901 Premium Modified Adhesive

2.2 ROOF INSULATION

A. General: Preformed roof insulation boards manufactured or approved by roofing manufacturer, selected from manufacturer's standard sizes suitable for application, of thicknesses indicated and that produce FM Approvals-approved roof insulation.

B. Polyisocyanurate Board Insulation: ASTM C 1289, Type II, Class 1, Grade 2, felt or glass-fiber mat facer on both major surfaces.

C. Tapered Polyisocyanurate Board Insulation: ASTM C 1289, Type II, Class 1, Grade 2, felt or glass-fiber mat facer on both major surfaces. Provide factory-tapered insulation boards fabricated to slope of 1/4 inch per 12 inches (1:48) unless otherwise indicated.

D. Provide preformed saddles, crickets, tapered edge strips, and other insulation shapes where indicated for sloping to drain. Fabricate to slopes indicated.

2.3 COVER BOARD

A. Gypsum Cover Board: ASTM C 1177, glass mat faced gypsum board.

B. Thickness: ½"

2.4 INSULATION ACCESSORIES

A. General: Furnish roof insulation accessories recommended by insulation manufacturer for intended use and compatibility with membrane roofing.

B. Fasteners: Factory-coated steel fasteners and metal or plastic plates meeting corrosion-resistance provisions in FM Approvals 4470, designed for fastening roof insulation to substrate, and acceptable to roofing system manufacturer.

C. Modified Asphaltic Insulation Adhesive: Insulation manufacturer's recommended modified asphaltic, asbestos-free, cold-applied adhesive formulated to attach roof insulation to substrate or to another insulation layer.

D. Bead-Applied Insulation Adhesive: Insulation manufacturer's recommended bead-applied, low-rise, one-component or multicomponent urethane adhesive formulated to attach roof insulation to substrate or to another insulation layer.

E. Full-Spread Applied Insulation Adhesive: Insulation manufacturer's recommended spray-applied, low-rise, two-component urethane adhesive formulated to attach roof insulation to substrate or to another insulation layer.

F. Tapered Edge Strips: ASTM C 1289, factory tapered polyisocyanurate insulation boards fabricated to slope as indicated on the drawings.

2.5 WALKWAYS

A. Walkway Cap Sheet Strips: ASTM D 6163, Grade G, Type I or II, SBS-modified asphalt sheet (reinforced with glass fibers) granular surfaced; suitable for application method specified, and as follows:

1. Granule Color: White

2.6 AUXILIARY ROOFING COMPONENTS

A. General: Auxiliary materials recommended by roofing system manufacturer for intended use and compatible with built-up roofing.

B. Roofing Asphalt: ASTM D 312, Type IV

C. Asphalt Primer: ASTM D 41.

D. Asphalt Roofing Cement: ASTM D 4586, asbestos free, of consistency required by roofing system manufacturer for application.

E. Mastic Sealant: As required by manufacturer

F. Fasteners: Factory-coated steel fasteners and metal or plastic plates meeting corrosion-resistance provisions in FMG 4470, designed for fastening roofing membrane components to substrate, tested by manufacturer for required pullout strength, and provided by the roofing system manufacturer.

G. Roofing Granules: Ceramic-coated roofing granules matching specified cap sheet, provided by roofing system manufacturer.

H. Miscellaneous Accessories: Provide miscellaneous accessories recommended by roofing system manufacturer.

PART 3 - EXECUTION

3.1 EXAMINATION

A. Examine substrates, areas, and conditions, with Installer present, for compliance with the following requirements and other conditions affecting performance of roofing system:

1. Verify that roof openings and penetrations are in place and curbs are set and braced and that roof drain bodies are securely clamped in place.
2. Verify that wood cants, blocking, curbs, and nailers are securely anchored to roof deck at penetrations and terminations and that nailers match thicknesses of insulation.
3. Verify that surface plane flatness and fastening of steel roof deck complies with requirements in Division 05 Section "Steel Decking."
4. Verify that minimum concrete drying period recommended by roofing system manufacturer has passed.
5. Verify that concrete substrate is visibly dry and free of moisture. Test for capillary moisture by plastic sheet method according to ASTM D 4263.

6. Verify that concrete-curing compounds that will impair adhesion of roofing components to roof deck have been removed.

B. Proceed with installation only after unsatisfactory conditions have been corrected.

3.2 PREPARATION

A. Clean substrate of dust, debris, moisture, and other substances detrimental to roofing installation according to roofing system manufacturer's written instructions. Remove sharp projections.

B. Prevent materials from entering and clogging roof drains and conductors and from spilling or migrating onto surfaces of other construction. Remove roof-drain plugs when no work is taking place or when rain is forecast.

C. Prime surface of concrete deck with asphalt primer at a rate of 3/4 gal./100 sq. ft. (0.3 L/sq. m) and allow primer to dry.

3.3 INSULATION INSTALLATION

A. Comply with roofing system manufacturer's written instructions for installing roof insulation.

B. Insulation Cant Strips: Install and secure preformed 45-degree insulation cant strips at junctures of roofing membrane system with vertical surfaces or angle changes more than 45 degrees.

C. Install tapered insulation under area of roofing to conform to slopes indicated.

D. Install insulation with long joints of insulation in a continuous straight line with end joints staggered between rows, abutting edges and ends between boards. Fill gaps exceeding 1/4 inch (6 mm) with insulation.

1. Cut and fit insulation within 1/4 inch (6 mm) of nailers, projections, and penetrations.

E. Install insulation under area of roofing to achieve required thickness. Where overall insulation thickness is 2.7 inches (68 mm) or more, install two or more layers with joints of each succeeding layer staggered from joints of previous layer a minimum of 6 inches (150 mm) in each direction.

1. Where installing composite and noncomposite insulation in two or more layers, install noncomposite board insulation for bottom layer and intermediate layers, if applicable, and install composite board insulation for top layer.

F. Trim surface of insulation where necessary at roof drains so completed surface is flush and does not restrict flow of water.

G. Install tapered edge strips at perimeter edges of roof that do not terminate at vertical surfaces.

H. Adhered Insulation: Install each layer of insulation and adhere to substrate as follows:

1. Prime surface of concrete deck with asphalt primer at rate of 3/4 gal./100 sq. ft. (0.3 L/sq. m) and allow primer to dry.
2. Install each layer using a cold fluid-applied adhesive according to roofing system manufacturer's instruction.

I. Mechanically Fastened Insulation: Install each layer of insulation and secure to deck using mechanical fasteners specifically designed and sized for fastening specified board-type roof insulation to deck type.
1. Fasten insulation to resist uplift pressure at corners, perimeter, and field of roof.

J. Install cover boards over insulation with long joints in continuous straight lines with end joints staggered between rows. Offset joints a minimum of 6 inches (150 mm) in each direction from joints of insulation below. Loosely butt cover boards together and fasten to roof deck.
1. Fasten cover boards to resist uplift pressure at corners, perimeter, and field of roof.
2. Install using a cold fluid-applied adhesive according to roofing system manufacturer's instruction.

3.4 ROOFING MEMBRANE INSTALLATION, GENERAL

A. Install roofing membrane system according to roofing system manufacturer's written instructions and applicable recommendations in ARMA/NRCA's "Quality Control Guidelines for the Application of Polymer Modified Bitumen Roofing" and as follows:
1. Number of SBS-Modified Asphalt Sheets: Two.
2. Surfacing Type: M (mineral-granule-surfaced cap sheet).

B. Start installation of roofing membrane in presence of roofing system manufacturer's technical personnel.

C. Cooperate with testing agencies engaged or required to perform services for installing roofing system.

D. Coordinate installation of roofing system so insulation and other components of the roofing membrane system not permanently exposed are not subjected to precipitation or left uncovered at the end of the workday or when rain is forecast.
   1. Provide tie-offs at end of each day's work to cover exposed roofing membrane sheets and insulation.
   2. Complete terminations and base flashings and provide temporary seals to prevent water from entering completed sections of roofing system.
   3. Remove and discard temporary seals before beginning work on adjoining roofing.

E. Substrate-Joint Penetrations: Prevent roofing asphalt and adhesives from penetrating substrate joints, entering building, or damaging roofing system components or adjacent building construction.

3.5 SBS-MODIFIED BITUMINOUS MEMBRANE INSTALLATION

A. Install modified bituminous roofing membrane sheet and cap sheet according to roofing manufacturer's written instructions, starting at low point of roofing system. Extend roofing membrane sheets over and terminate beyond cants, installing as follows:

   1. Adhere to substrate in cold-applied adhesive according to roofing system manufacturer's instruction.

   2. Unroll roofing membrane sheets and allow them to relax for minimum time period required by manufacturer.

B. Laps: Accurately align roofing membrane sheets, without stretching, and maintain uniform side and end laps. Stagger end laps. Completely bond and seal laps, leaving no voids.

   1. Repair tears and voids in laps and lapped seams not completely sealed.
   2. Contractor to heat weld all laps on SBS membrane.
   3. Apply roofing granules to cover exuded bead at laps while bead is hot.

C. Install roofing membrane sheets so side and end laps shed water.

3.6 FLASHING AND STRIPPING INSTALLATION

A. Install base flashing over cant strips and other sloped and vertical surfaces, at roof edges, and at penetrations through roof; secure to substrates according to roofing system manufacturer's written instructions, and as follows:

   1. Prime substrates with asphalt primer if required by roofing system manufacturer.
   2. Backer Sheet Application: Mechanically fasten backer sheet to walls or parapets.
   3. Flashing Sheet Application: Adhere flashing sheet to substrate in approved adhesive applied at rate required by roofing system manufacturer.

B. Extend base flashing up walls or parapets a minimum of 8 inches (200 mm) above roofing membrane and 4 inches (100 mm) onto field of roofing membrane.

C. Mechanically fasten top of base flashing securely at terminations and perimeter of roofing.

1. Seal top termination of base flashing with a strip of glass-fiber fabric set in asphalt roofing cement.

D. Install roofing membrane cap-sheet stripping where metal flanges and edgings are set on membrane roofing according to roofing system manufacturer's written instructions.

E. Roof Drains: Set 48 inch x 48 inch square metal flashing in bed of asphalt roofing cement on completed roofing membrane. Cover metal flashing with roofing membrane cap-sheet stripping and extend a minimum of 6 inches (150 mm) beyond edge of metal flashing onto field of roofing membrane. Clamp roofing membrane, metal flashing, and stripping into roof-drain clamping ring.

1. Install stripping according to roofing system manufacturer's written instructions.

F. Liquid flashing to be used at the following conditions:
1. All roof drains
2. All pipe penetrations
3. All roof hatch and equipment curbs

3.7 WALKWAY INSTALLATION

A. Walkway Cap Sheet Strips: Install walkway cap sheet strips over roofing membrane using same application method as used for roofing membrane cap sheet.

3.8 FIELD QUALITY CONTROL

A. Final Roof Inspection: Arrange for roofing system manufacturer's technical personnel to inspect roofing installation on completion.

1. Notify Architect and Owner 48 hours in advance of date and time of inspection.

2. The roofing Contractor shall supply all of the Roofing Manufacturer's Inspection Reports / Job Site Visits to the Architect for review.

B. Roofing system will be considered defective if it does not pass tests and inspections.

1. Additional testing and inspecting, at Contractor's expense, will be performed to determine if replaced or additional work complies with specified requirements.

3.9 PROTECTING AND CLEANING

A. Protect roofing system from damage and wear during remainder of construction period. When remaining construction will not affect or endanger roofing, inspect roofing for

deterioration and damage, describing its nature and extent in a written report, with copies to Architect and Owner.

B. Correct deficiencies in or remove roofing system that does not comply with requirements, repair substrates, and repair or reinstall roofing system to a condition free of damage and deterioration at time of Substantial Completion and according to warranty requirements.

C. Clean overspray and spillage from adjacent construction using cleaning agents and procedures recommended by manufacturer of affected construction.

D. The Contractor shall completely seal the roof on the same day as installation. In addition, the Contractor should not initiate more roofing installation than can be installed in the same day, keeping watch on hourly local rain forecasts. Any installed roofing insulation that is wet must be replaced. Proper tie-off must be performed daily to protect new roofing materials and the building.

END OF SECTION 075216

Facility Planning and Control
State of Louisiana

TWENTY (20) YEAR
MANUFACTURER'S NDL WATERTIGHTNESS
MEMBRANE
ROOFING SYSTEM WARRANTY

MFGR. Warranty No._____

_____ ,hereinafter referred to as "mfgr" hereby warrants to the owner, known as the State of Louisiana, hereinafter referred to as the "State" that the referenced membrane roofing assembly will remain in a watertight condition for a period of 20 Years. For the purpose of this warranty "watertight" or "watertightness means that the roofing system does not allow water to leak through a breach in the roofing system. Mfgr further warrants the performance of the products listed below and warrants that the material and installation of the roofing assembly is free of material and known installation defects at the time of application and that the materials listed below conform to mfgr specifications.

All products used in the roofing assembly from the deck (structural concrete, metal, LWIC, wood, etc.), up are included in this warranty regardless of whether mfgr furnished or branded the products with the exception of shop fabricated metals not furnished by mfgr. These products are to include, but not be limited to: base sheets, fasteners and plates, insulation board, cover board, asphalt, adhesives (insulation and membrane), mastics, field plies, membrane flashing plies and liquid flashing products. The roofing products are specifically listed as follows:

1.
2.
3.
4.
5.
6.
7.
8.
9.
10.

In the event that the new membrane roofing assembly is installed in a recover fashion over an existing roofing assembly, the performance of the existing roofing products that remain in-place beneath the new roofing assembly are excluded from this warranty.

In the event that covered leaks occur in the roofing system that are attributable to the workmanship of the installing contractor or a defect in or failure of any of the mfgr products listed above, mfgr will make repairs required to return the roof to a watertight condition, regardless of the scope and cost of the required repairs. The State will notify mfgr within 30 days of the discovery of the leak. Should the State not make this notification within the prescribed 30 day time period, then further damage to the roofing assembly caused by the delay in notification will not be construed as a warranty repair item. Mfgr will respond to the leak notification within 10 days and once it is confirmed that the leak(s) is within the scope of mfgrs responsibilities under this warranty, mfgr will execute repairs promptly thereafter. Mfgr's failure to respond timely and make proper repairs shall enable the State to engage service of "others" to address the problem(s) at mfgr's expense assuming the cost of the repair is reasonable and the scope of the repair is limited to the remedy of the leak without jeopardizing State's protection under terms of this warranty. The State may make reasonable and customary emergency temporary repairs at its discretion and at mfgrs expense without jeopardizing the State's protection under the terms of this warranty.

This Form shall be utilized on the following Roof Systems:
2-Ply SBS, 1-Ply (PVC, TPO) & SPF.

On a **2-Ply SBS Roof System**, the manufacturers and their products previously approved by the State are included in the State's list of acceptable products; these mfgrs have agreed to a dimensional stability of the cap sheet and interply sheet of 0.2% per ASTM D 5147, section 10. 0.2% of a 33 foot roll is approximately equal to ¾". For the term of this warranty, SBS cap sheet shrinkage in excess of ¾" will be repaired by the mfgr by cutting out the interply void in the "T" lap, cleaning and drying, and repair with an acceptable cap sheet product.

The following items are excluded from this warranty:

1. Damage to the roof caused by wind exceeding 73 mph, lightning, hail, fire or physical damage from falling or wind-blown objects
2. Deficient design by other than mfgr
3. Intentional or accidental damages to the roof, or misuse, abuse, vandalism or the likes
4. Leaks caused by deterioration or failure of items not included in the warranty
5. Modifications or alterations to the roofing assembly after completion unless done in a manner approved by mfgr
6. Damage to the roofing assembly after issuance of this warranty caused by excessive foot traffic or its use as a work platform or storage area

7. Damage to the roofing assembly caused by ponding water, which is defined as water on the surface of the roof that does not dissipate within 72 hours of average drying conditions
8. Consequential and incidental damages, including damage to the building or its contents
9. Damage to the roofing assembly caused by failure by the State to exercise reasonable care and maintenance
10. Damage to the roofing assembly caused by structural defects or failure or excessive movement of building components
11. Damage to the roofing assembly due to exposure to chemical attack, including deposits of animal fats, grease and oil
12. The State shall be responsible for the costs associated with the removal and replacement of any overburden, superstrata or overlays, either permanent or temporary, which include but are not limited to: structures or assemblies added after installation, fixtures or utilities on or through the roofing assembly, support platforms or bases for solar panels, garden roofs, decks, patios or any other obstacles that impede access, clear observation, investigation or repairs to the roofing system, excluding ballast or pavers or any other overburden specifically accepted by mfgr to be included within warranty coverage.

For wind related events, this warranty excludes damage to the roofing assembly where the cause includes any of the following:

A. Failure or excessive movement of primary or secondary structural elements or roof deck, wood nailers or blocking and edge system components not furnished by mfgr
B. Failure of walls, doors, windows, openings or other building envelope components
C. Rooftop structures and equipment

Mfgr may have access to the roof for inspection purposes for the term of the warranty by scheduling through the appropriate State Agency.

This warranty is tendered for the benefit of the State and is not transferable or assignable without the written consent of Mfgr.

The Nineteenth Judicial District Court in and for the Parish of East Baton Rouge, State of Louisiana shall have sole jurisdiction in any action brought as a result of this warranty by any party hereto. This warranty shall be governed by and construed in accordance with the laws of the State of Louisiana.

This warranty instrument supersedes and is in lieu of any and all other expressed or implied warranties that are or may be in conflict with terms and conditions stated herein.

This warranty requires the signature of an authorized officer of Mfgr. Three fully executed copies are to be provided to the State as a prerequisite for project acceptance. The State's signature shall not be a requirement for implementation of, or cause to validate this warranty.

A separate and independent warranty shall be issued for each building or independent roof system in the case of multiple buildings or mixed roof types.

PROJECT DATA / SIGNATORS

Owner: State of Louisiana – DOA – Facility Planning and Control

Building/Project Name: _____

Roof Type: _____

No. of Squares (100 SF): _____

Location: _____

State I.D. (if Exist. Bldg.): _____

Site Code: _____

State Project No. & WBS: _____

Date of Project Acceptance/Commencement of Warranty: _____ Ends: _____

Manufacturer Information

Mfgr. Name: _____

Mfgr. Address: _____

Mfgr. Phone No.: _____

Authorized Mfgr. Signature:

S _____

Printed Name_____ Date: _____

Title_____

ADDITIONAL PARTIES FOR FILE AND RECORD

File Reference:
Contractor or
Roofing Contractor

Name: _____

Address: _____

Phone No.: _____

File Reference #2:
Contractor or
Roofing Contractor

Name: _____

Address: _____

Phone No.: _____

Direct to:

STATE of LOUISIANA (Owner)
DIVISION OF ADMINISTRATION
Facility Planning and Control
Statewide Roofing Program
PO Box 94095
Baton Rouge, Louisiana 70804-9095

R-1 ROOFING GUARANTEE
(Roofing Contractor is Sub to G.C.)

OWNER: STATE OF LOUISIANA

ADDRESS: OFFICE OF FACILITY PLANNING AND CONTROL
POST OFFICE BOX 94095 CAPITOL STATION
BATON ROUGE, LOUISIANA 70804-9095

Whereas _____

Address _____

Telephone (_____)_____ Email _____

herein called the "Roofing Contractor", has performed roofing and flashing in accordance with the Contract Documents for Project No. & WBS _____
(hereinafter called the "Work") under a

Subcontract with _____

General Contractor on the Following Project: _____

Name of Project: _____

User Agency: _____

Location/Address: _____

Name and Type of Building(s): _____ State I.D. _____

Type(s) of Roof Deck(s): _____

Total Roof Area: _____ SF; Metal Edge Flashing: _____ LF

Date of Acceptance: _____Guarantee Period: 2 Years

Date of Expiration: _____

AND WHEREAS the Roofing Contractor has contracted (as a Subcontractor) to guarantee said work against water entry from faulty or defective materials and workmanship for the designated Guarantee period of TWO **(2) YEARS from the Acceptance Date** of the Project;

AND WHEREAS the General Contractor, by its acceptance of the Contract for the above described project, has jointly assumed with the Roofing Contractor the obligations to the Owner of said guarantee against leaks and faulty or defective materials and workmanship;

NOW THEREFORE the Roofing Contractor and the General Contractor jointly and severally guarantee, subject to the terms and conditions herein set forth, that during the Guarantee Period they will at their own cost and expense, make or cause to be made with approved procedures and materials such repairs to or replacements

of said work resulting from water entry or faults or defects of said Work as are necessary to correct faulty and defective work and as are necessary to maintain said Work in watertight conditions and further to respond on or within two (2) working days upon written notification of leaks or defects by the Owner/User Agency. Furthermore, they will at their own cost and expense maintain the roof for (2) years after acceptance, in accordance with the current edition of the Roof Maintenance Manual published by the Roofing Industry Educational Institute. The roof shall be inspected a minimum of twice each year, and a report prepared documenting the conditions observed at each inspection. These inspections shall be made once during the months of April or May and once during the months of September and October. Two copies of each report shall be forwarded to the Owner and User Agency.

This Guarantee is made subject to the following terms and conditions:

1. Damage to the roof caused by the following items are excluded from this warranty: wind exceeding 73 mph, lightning, hail, fire or physical damage from falling or wind-blown objects. When the Work has been damaged by any of the foregoing causes, the Guarantee will be null and void until such damage has been repaired by the Roofing Contractor, and until the cost and expense thereof has been paid by the Owner or another responsible party so designated.

2. During the Guarantee Period, if the Owner/User Agency allows alteration of the Work by anyone other than a Contractor approved in writing by the Roofing Subcontractor, General Contractor, and Roofing Material Manufacturer prior to the work being performed, including cutting, patching and maintenance in connection with penetrations, attachment of other work, and positioning of anything on the roof, this Guarantee shall become null and void upon the date of said alterations. If the Owner/User Agency engages the Roofing Contractor to perform said alterations, the Guarantee shall not become null and void, unless the Roofing Contractor, prior to proceeding with said work, shall have notified the Owner/User Agency in writing, showing reasonable cause for claim that said alterations would likely damage or deteriorate the Work, thereby reasonably justifying a termination of this Guarantee.

3. During the Guarantee Period, if the original use of the roof is changed and it becomes used for, but for which it was not originally designed or specified, as a promenade, work deck, spray-cooled surface, flooded basin, or other use of service more severe than originally specified, this Guarantee shall become null and void upon the date of said change.

4. During the Guarantee Period, if any building or area of a building is changed to uses creating extremes of interior temperature and/or humidity, but for which it was not originally designed and specified, without provisions and alterations made to the building which effectively contain or control these conditions, this guarantee shall become null and void upon the date of said change.

5. The Owner/User Agency shall promptly notify the Roofing Contractor in writing of observed, known or suspected leaks, defects or deterioration, and shall afford reasonable opportunity for the Roofing Contractor to inspect the Work, and to examine the evidence of such leaks, defects or deterioration.

6. This Guarantee is recognized to be the only guarantee of the General and Roofing Contractor on said work, and shall not operate to restrict or cut off the Owner from other remedies and recourses lawfully available to him in case of roofing failure. Specifically, this Guarantee shall not operate to relieve the Roofing Contractor of his responsibility for performance of the original work, regardless of whether the Contract was a Contract directly with the Owner or a Subcontract with the Owner's General Contractor.

IN WITNESS THEREOF, this instrument has been duly executed this _____
day of _____, 20____.

Roofing Contractor's Signature: _____

Typed Name: _____

Representing: _____

Telephone (_____)_____ Email _____

Witness:_____ Witness:_____

And has been countersigned by the General Contractor issuing the Roofing Contractor's Subcontract for said work:

Name of General Contractor: _____

Date: _____ Authorized Signature: _____

Typed Name: _____

Representing: _____

Telephone (_____)_____ Email _____

Witness:_____ Witness:_____

SECTION 077100 - ROOF SPECIALTIES

PART 1 - GENERAL

1.1 RELATED DOCUMENTS

A. Drawings and general provisions of the Contract, including General and Supplementary Conditions and Division 01 Specification Sections, apply to this Section.

1.2 SUMMARY

A. Section Includes:

1. Copings
2. Roof-edge specialties
3. Reglets and counterflashings (as noted in keynotes with the prefix of 076200)

B. Preinstallation Conference: Conduct conference at Project site.

1. Meet with Owner, Architect, Owner's insurer if applicable, roofing-system testing and inspecting agency representative, roofing Installer, roofing-system manufacturer's representative, Installer, structural-support Installer, and installers whose work interfaces with or affects roof specialties, including installers of roofing materials and accessories.
2. Examine substrate conditions for compliance with requirements, including flatness and attachment to structural members.
3. Review special roof details, roof drainage, and condition of other construction that will affect roof specialties.

1.3 ACTION SUBMITTALS

A. Product Data: For each type of product.

1. Include construction details, material descriptions, dimensions of individual components and profiles, and finishes.

B. Shop Drawings: For roof specialties.

1. Include plans, elevations, expansion-joint locations, keyed details, and attachments to other work. Distinguish between plant- and field-assembled work.
2. Include details for expansion and contraction; locations of expansion joints, including direction of expansion and contraction.
3. Indicate profile and pattern of seams and layout of fasteners, cleats, clips, and other attachments.
4. Detail termination points and assemblies, including fixed points.
5. Include details of special conditions.

C. Samples: For each type of roof specialty and for each color and texture specified.

D. Samples for Verification:

A. Include Samples of each type of roof specialty to verify finish and color selection, in manufacturer's standard sizes.
B. Include copings, roof-edge specialties, reglets and counterflashings made from 12-inch (300-mm) lengths of full-size components in specified material, and including fasteners, cover joints, accessories, and attachments.

1.4 INFORMATIONAL SUBMITTALS

A. Product Certificates: For each type of roof specialty.

B. Product Test Reports: For copings and roof-edge flashings, for tests performed by a qualified testing agency.

C. Sample Warranty: For manufacturer's special warranty.

1.5 CLOSEOUT SUBMITTALS

A. Maintenance Data: For roofing specialties to include in maintenance manuals.

1.6 QUALITY ASSURANCE

A. Manufacturer Qualifications: A qualified manufacturer offering products meeting requirements that are FM Approvals listed for specified class and SPRI ES-1 tested to specified design pressure.

B. Source Limitations: Obtain roof specialties approved by manufacturer providing roofing-system warranty specified in Section.

C. Mockups: Build mockups to verify selections made under Sample submittals, to demonstrate aesthetic effects, and set quality standards for fabrication and installation.

A. Build mockup of typical coping as shown on Drawings. Refer to masonry wall mockup.
B. Approval of mockups does not constitute approval of deviations from the Contract Documents contained in mockups unless Architect specifically approves such deviations in writing.

1.7 DELIVERY, STORAGE, AND HANDLING

A. Do not store roof specialties in contact with other materials that might cause staining, denting, or other surface damage. Store roof specialties away from uncured concrete and masonry.

B. Protect strippable protective covering on roof specialties from exposure to sunlight and high humidity, except to extent necessary for the period of roof-specialty installation.

1.8 FIELD CONDITIONS

A. Field Measurements: Verify profiles and tolerances of roof-specialty substrates by field measurements before fabrication, and indicate measurements on Shop Drawings.

B. Coordination: Coordinate roof specialties with flashing, trim, and construction of parapets, roof deck, roof and wall panels, and other adjoining work to provide a leakproof, secure, and noncorrosive installation.

1.9 WARRANTY

A. Roofing-System Warranty: Roof specialties are included in warranty provisions in Specification Section 075216.

B. Special Warranty on Painted Finishes: Manufacturer agrees to repair finish or replace roof specialties that show evidence of deterioration of factory-applied finishes within specified warranty period.

A. Fluoropolymer Finish: Deterioration includes, but is not limited to, the following:

a. Color fading more than 5 Hunter units when tested according to ASTM D 2244.
b. Chalking in excess of a No. 8 rating when tested according to ASTM D 4214.
c. Cracking, checking, peeling, or failure of paint to adhere to bare metal.

B. Finish Warranty Period: 20 years from date of Substantial Completion.

PART 2 - PRODUCTS

2.1 PERFORMANCE REQUIREMENTS

A. General Performance: Roof specialties shall withstand exposure to weather and resist thermally induced movement without failure, rattling, leaking, or fastener disengagement due to defective manufacture, fabrication, installation, or other defects in construction.

B. SPRI Wind Design Standard: Manufacture and install copings and roof-edge specialties tested according to SPRI ES-1 and capable of resisting the following design pressures:

A. Design Pressure: As indicated on Drawings.

C. Thermal Movements: Allow for thermal movements from ambient and surface temperature changes to prevent buckling, opening of joints, hole elongation, overstressing of components, failure of joint sealants, failure of connections, and other

detrimental effects. Provide clips that resist rotation and avoid shear stress as a result of thermal movements. Base calculations on surface temperatures of materials due to both solar heat gain and nighttime-sky heat loss.

A. Temperature Change (Range): 120 deg F (67 deg C), ambient; 180 deg F (100 deg C), material surfaces.

2.2 COPINGS

A. Metal Copings: Manufactured coping system consisting of metal coping cap in section lengths not exceeding 12 feet (3.6 m), concealed anchorage; with corner units, end cap units, and concealed splice plates with finish matching coping caps.

A. Manufacturers: Subject to compliance with requirements, provide products by one of the following:

a. Hickman Company, W. P.
b. Johns Manville.
c. Petersen Aluminum Corporation.

B. Formed Aluminum Sheet Coping Caps: Aluminum sheet, thickness as required to meet performance requirements.

a. Surface: Smooth, flat finish.
b. Finish: Two-coat fluoropolymer.
c. Color: As selected by Architect from manufacturer's full range.

C. Corners: Factory mitered and mechanically clinched and sealed watertight.
D. Special Fabrications: Radiussed sections as noted on drawings.
E. Coping-Cap Attachment Method: Face leg hooked to continuous cleat with back leg fastener exposed, fabricated from coping-cap material.
a. Face-Leg Cleats: Concealed, continuous stainless steel.

2.3 ROOF-EDGE SPECIALTIES

A. Roof-Edge Fascia: Manufactured, two-piece, roof-edge fascia consisting of snap-on metal fascia cover in section lengths not exceeding 12 feet (3.6 m) and a continuous metal receiver with integral drip-edge cleat to engage fascia cover. Provide matching corner units.

A. Manufacturers: Subject to compliance with requirements, provide products by one of the following:

a. Hickman Company, W. P.
b. SAF Perimeter Systems

B. Formed Aluminum Sheet Fascia Covers: Aluminum sheet, thickness as required to meet performance requirements (24 gauge minimum).

a. Surface: Smooth, flat finish.
b. Finish: Two-coat fluoropolymer.
c. Color: As selected by Architect from manufacturer's full range.

C. Corners: Factory mitered and mechanically clinched and sealed watertight.
D. Splice Plates: Concealed, of same material, finish, and shape as fascia cover.
E. Receiver: Extruded aluminum, 0.080 inch (2.03 mm) thick
F. Special Fabrications: Radiussed sections as may be required by drawings.

2.4 REGLETS AND COUNTERFLASHINGS

A. Manufacturers: Subject to compliance with requirements, provide products by one of the following:

1. Hickman Company, W. P.

2. Fry Reglet

B. Reglets: Manufactured units formed to provide secure interlocking of separate reglet and counterflashing pieces, from the following exposed metal:
A. Formed Aluminum: 0.024 inch (0.61 mm) thick minimum.
B. Corners: Factory mitered and mechanically clinched and sealed watertight.
C. Stucco Type, Embedded: Provide reglets with upturned fastening flange and extension leg of length to match thickness of applied finish materials.
D. Masonry Type, Embedded: Provide reglets with offset top flange for embedment in masonry mortar joint.

C. Counterflashings: Manufactured units of heights to overlap top edges of base flashings by 4 inches (100 mm) and in lengths not exceeding 12 feet (3.6 m) designed to snap into reglets and compress against base flashings with joints lapped, from the following exposed metal:
A. Formed Aluminum: 0.024 inch (0.61 mm) thick minimum.

D. Accessories:

A. Flexible-Flashing Retainer: Provide resilient plastic or rubber accessory to secure flexible flashing in reglet where clearance does not permit use of standard metal counterflashing or where reglet is provided separate from metal counterflashing.
B. Counterflashing Wind-Restraint Clips: Provide clips to be installed before counterflashing to prevent wind uplift of counterflashing lower edge.

E. Aluminum Finish: Two-coat fluoropolymer.

A. Color: As selected by Architect from manufacturer's full range.

2.5 MATERIALS

A. Aluminum Sheet: ASTM B 209 (ASTM B 209M), alloy as standard with manufacturer for finish required, with temper to suit forming operations and performance required.

B. Aluminum Extrusions: ASTM B 221 (ASTM B 221M), alloy and temper recommended by manufacturer for type of use and finish indicated, finished as follows:

C. Stainless-Steel Sheet: ASTM A 240/A 240M or ASTM A 666, Type 304.

D. All rivets to be stainless steel.

2.6 UNDERLAYMENT MATERIALS

A. Self-Adhering, High-Temperature Sheet: Minimum 30 to 40 mils (0.76 to 1.0 mm) thick, consisting of slip-resisting polyethylene-film top surface laminated to layer of butyl or SBS-modified asphalt adhesive, with release-paper backing; cold applied. Provide primer when recommended by underlayment manufacturer.
   A. Thermal Stability: ASTM D 1970/D 1970M; stable after testing at 240 deg F (116 deg C).
   B. Low-Temperature Flexibility: ASTM D 1970/D 1970M; passes after testing at minus 20 deg F (29 deg C).

B. Felt: ASTM D 226/D 226M, Type II (No. 30), asphalt-saturated organic felt, nonperforated.

C. Slip Sheet: Rosin-sized building paper, 3-lb/100 sq. ft. (0.16-kg/sq. m) minimum.

2.7 MISCELLANEOUS MATERIALS

A. Fasteners: Manufacturer's recommended fasteners, suitable for application and designed to meet performance requirements. Furnish the following unless otherwise indicated:

   A. Exposed Penetrating Fasteners: Gasketed screws with hex washer heads matching color of sheet metal.
   B. Fasteners for Aluminum: Aluminum or Series 300 stainless steel.
   C. Fasteners for Stainless-Steel Sheet: Series 300 stainless steel.

B. Elastomeric Sealant: ASTM C 920, elastomeric silicone polymer sealant of type, grade, class, and use classifications required by roofing-specialty manufacturer for each application.

C. Butyl Sealant: ASTM C 1311, single-component, solvent-release butyl rubber sealant; polyisobutylene plasticized; heavy bodied for hooked-type CONCEALED joints with limited movement.

D. Bituminous Coating: Cold-applied asphalt emulsion complying with ASTM D 1187/D 1187M.

E. Asphalt Roofing Cement: ASTM D 4586, asbestos free, of consistency required for application.

2.8 FINISHES

A. Comply with NAAMM's "Metal Finishes Manual for Architectural and Metal Products" for recommendations for applying and designating finishes.

B. Protect mechanical and painted finishes on exposed surfaces from damage by applying a strippable, temporary protective covering before shipping.

C. Appearance of Finished Work: Noticeable variations in same piece are unacceptable. Variations in appearance of adjoining components are acceptable if they are within the range of approved Samples and are assembled or installed to minimize contrast.

D. Coil-Coated Aluminum Sheet Finishes:

   A. High-Performance Organic Finish: Prepare, pretreat, and apply coating to exposed metal surfaces to comply with coating and resin manufacturers' written instructions.

      a. Two-Coat Fluoropolymer: AAMA 2605. Fluoropolymer finish containing not less than 70 percent PVDF resin by weight in color coat. Prepare, pretreat, and apply coating to exposed metal surfaces to comply with coating and resin manufacturers' written instructions.
      b. Concealed Surface Finish: Apply pretreatment and manufacturer's standard acrylic or polyester backer finish consisting of prime coat and wash coat with a minimum total dry film thickness of 0.5 mil (0.013 mm).

E. Aluminum Extrusion Finishes:

   A. High-Performance Organic Finish: Prepare, pretreat, and apply coating to exposed metal surfaces to comply with coating and resin manufacturers' written instructions.

      a. Two-Coat Fluoropolymer: AAMA 2605. Fluoropolymer finish containing not less than 70 percent PVDF resin by weight in color coat. Prepare, pretreat, and apply coating to exposed metal surfaces to comply with coating and resin manufacturers' written instructions.
      b. Concealed Surface Finish: Apply pretreatment and manufacturer's standard acrylic or polyester backer finish consisting of prime coat and wash coat with a minimum total dry film thickness of 0.5 mil (0.013 mm).

PART 3 - EXECUTION

3.1 EXAMINATION

A. Examine substrates, areas, and conditions, with Installer present, to verify actual locations, dimensions, and other conditions affecting performance of the Work.

B. Examine walls, roof edges, and parapets for suitable conditions for roof specialties.

C. Verify that substrate is sound, dry, smooth, clean, sloped for drainage where applicable, and securely anchored.

D. Proceed with installation only after unsatisfactory conditions have been corrected.

3.2 UNDERLAYMENT INSTALLATION

A. Self-Adhering Sheet Underlayment: Apply primer if required by manufacturer. Comply with temperature restrictions of underlayment manufacturer for installation. Apply wrinkle free, in shingle fashion to shed water, and with end laps of not less than 6 inches (152 mm) staggered 24 inches (610 mm) between courses. Overlap side edges not less than 3-1/2 inches (90 mm). Roll laps with roller. Cover underlayment within 14 days.

   A. Apply continuously under copings, roof-edge specialties, and, reglets and counterflashings.
   B. Coordinate application of self-adhering sheet underlayment under roof specialties with requirements for continuity with adjacent air barrier materials.

B. Felt Underlayment: Install with adhesive for temporary anchorage to minimize use of mechanical fasteners under roof specialties. Apply in shingle fashion to shed water, with lapped joints of not less than 2 inches (50 mm).

C. Slip Sheet: Install with tape or adhesive for temporary anchorage to minimize use of mechanical fasteners under roof specialties. Apply in shingle fashion to shed water, with lapped joints of not less than 2 inches (50 mm).

3.3 INSTALLATION, GENERAL

A. General: Install roof specialties according to manufacturer's written instructions. Anchor roof specialties securely in place, with provisions for thermal and structural movement. Use fasteners, solder, protective coatings, separators, underlayments, sealants, and other miscellaneous items as required to complete roof-specialty systems.

   A. Install roof specialties level, plumb, true to line and elevation; with limited oil-canning and without warping, jogs in alignment, buckling, or tool marks.
   B. Provide uniform, neat seams with minimum exposure of solder and sealant.
   C. Install roof specialties to fit substrates and to result in weathertight performance. Verify shapes and dimensions of surfaces to be covered before manufacture.
   D. Torch cutting of roof specialties is not permitted.
   E. Do not use graphite pencils to mark metal surfaces.

B. Metal Protection: Protect metals against galvanic action by separating dissimilar metals from contact with each other or with corrosive substrates by painting contact surfaces with bituminous coating or by other permanent separation as recommended by manufacturer.

   A. Coat concealed side of uncoated aluminum and stainless-steel roof specialties with bituminous coating where in contact with wood, ferrous metal, or cementitious construction.

B. Bed flanges in thick coat of asphalt roofing cement where required by manufacturers of roof specialties for waterproof performance.

C. Expansion Provisions: Allow for thermal expansion of exposed roof specialties.

A. Space movement joints at a maximum of 12 feet (3.6 m) with no joints within 18 inches (450 mm) of corners or intersections unless otherwise indicated on Drawings.
B. When ambient temperature at time of installation is between 40 and 70 deg F (4 and 21 deg C), set joint members for 50 percent movement each way. Adjust setting proportionately for installation at higher ambient temperatures.

D. Fastener Sizes: Use fasteners of sizes that penetrate wood blocking or sheathing not less than 1-1/4 inches (32 mm) for nails and not less than 3/4 inch (19 mm) for wood screws.

E. Seal concealed joints with butyl sealant as required by roofing-specialty manufacturer.

F. Seal joints as required for weathertight construction. Place sealant to be completely concealed in joint. Do not install sealants at temperatures below 40 deg F (4 deg C).

3.4 COPING INSTALLATION

A. Install cleats, anchor plates, and other anchoring and attachment accessories and devices with concealed fasteners.

B. Anchor copings with manufacturer's required devices, fasteners, and fastener spacing to meet performance requirements.
A. Interlock face-leg drip edge into continuous cleat anchored to substrate at manufacturer's required spacing that meets performance requirements. Anchor back leg of coping with screw fasteners and elastomeric washers at manufacturer's required spacing that meets performance requirements.

3.5 ROOF-EDGE SPECIALITIES INSTALLATION

A. Install cleats, cants, and other anchoring and attachment accessories and devices with concealed fasteners.

B. Anchor roof edgings with manufacturer's required devices, fasteners, and fastener spacing to meet performance requirements.

3.6 REGLET AND COUNTERFLASHING INSTALLATION

A. General: Coordinate installation of reglets and counterflashings with installation of base flashings.

B. Embedded Reglets: See Section 042000 "Unit Masonry" for installation of reglets.

C. Surface-Mounted Reglets: Install reglets to receive flashings where flashing without embedded reglets is indicated on Drawings. Install at height so that inserted counterflashings overlap 4 inches (100 mm) over top edge of base flashings.

D. Counterflashings: Insert counterflashings into reglets or other indicated receivers; ensure that counterflashings overlap 4 inches (100 mm) over top edge of base flashings. Lap counterflashing joints a minimum of 4 inches (100 mm) and bed with butyl sealant. Fit counterflashings tightly to base flashings.

3.7 CLEANING AND PROTECTION

A. Clean exposed metal surfaces of substances that interfere with uniform oxidation and weathering.

B. Remove temporary protective coverings and strippable films as roof specialties are installed. On completion of installation, clean finished surfaces, including removing unused fasteners, metal filings, pop rivet stems, and pieces of flashing. Maintain roof specialties in a clean condition during construction.

C. Replace roof specialties that have been damaged or that cannot be successfully repaired by finish touchup or similar minor repair procedures.

END OF SECTION 077100

SECTION 077200 - ROOF ACCESSORIES

PART 1 - GENERAL

1.1 RELATED DOCUMENTS

A. Drawings and general provisions of the Contract, including General and Supplementary Conditions and Division 01 Specification Sections, apply to this Section.

1.2 SUMMARY

A. Section Includes:
   1. Roof hatches.

1.3 COORDINATION

A. Coordinate layout and installation of roof accessories with roofing membrane and base flashing and interfacing and adjoining construction to provide a leakproof, weathertight, secure, and noncorrosive installation.

B. Coordinate dimensions with rough-in information or Shop Drawings of equipment to be supported.

1.4 ACTION SUBMITTALS

A. Product Data: For each type of roof accessory.

   1. Include construction details, material descriptions, dimensions of individual components and profiles, and finishes.

B. Shop Drawings: For roof accessories.

   1. Include plans, elevations, keyed details, and attachments to other work. Indicate dimensions, loadings, and special conditions. Distinguish between plant- and field-assembled work.

1.5 INFORMATIONAL SUBMITTALS

A. Coordination Drawings: Roof plans, drawn to scale, and coordinating penetrations and roof-mounted items. Show the following:

   1. Size and location of roof accessories specified in this Section.
   2. Method of attaching roof accessories to roof or building structure.

3. Other roof-mounted items including mechanical and electrical equipment, ductwork, piping, and conduit.
4. Required clearances.

B. Sample Warranties: For manufacturer's special warranties.

1.6 CLOSEOUT SUBMITTALS

A. Operation and Maintenance Data: For roof accessories to include in operation and maintenance manuals.

PART 2 - PRODUCTS

2.1 PERFORMANCE REQUIREMENTS

A. General Performance: Roof accessories shall withstand exposure to weather and resist thermally induced movement without failure, rattling, leaking, or fastener disengagement due to defective manufacture, fabrication, installation, or other defects in construction.

B. Wind-Restraint Performance: As indicated on Drawings.

2.2 ROOF HATCH

A. Roof Hatches: Metal roof-hatch units with lids and insulated single-walled curbs, welded or mechanically fastened and sealed corner joints, continuous lid-to-curb counterflashing and weathertight perimeter gasketing, straight sides and integrally formed deck-mounting flange at perimeter bottom.

1. Manufacturers: Subject to compliance with requirements, provide one of the following products.

a. Bilco Company (The).
b. J. L. Industries, Inc.
c. Milcor Inc.; Commercial Products Group of Hart & Cooley, Inc.
d. Nystrom.

B. Type and Size: Single-leaf lid, 30 by 36 inches (750 by 900 mm).

C. Loads: Minimum 40-lbf/sq. ft. (1.9-kPa) external live load and 20-lbf/sq. ft. (0.95-kPa) internal uplift load.

D. Hatch Material: Aluminum sheet.

1. Thickness: Manufacturer's standard thickness for hatch size indicated.
2. Finish: Mill.

E. Construction:

1. Insulation: Cellulosic-fiber board.
2. Hatch Lid: Opaque, insulated, and double walled, with manufacturer's standard metal liner of same material and finish as outer metal lid.
3. Fabricate curbs to minimum height of 12 inches (305 mm) above roofing surface unless otherwise indicated.
4. Sloping Roofs: Where slope or roof deck exceeds 1:48, fabricate curb with perimeter curb height that is tapered to accommodate roof slope so that top surfaces of perimeter curb are level. Equip hatch with water diverter or cricket on side that obstructs water flow.

F. Hardware: Spring operators, hold-open arm, stainless-steel spring latch with turn handles, stainless-steel butt- or pintle-type hinge system, and padlock hasps inside and outside.

G. Ladder-Assist Post: Roof-hatch manufacturer's standard device for attachment to roof-access ladder.

1. Operation: Post locks in place on full extension; release mechanism returns post to closed position.
2. Height: 42 inches (1060 mm) above finished roof deck.
3. Material: Steel tube.
4. Post: 1-5/8-inch- (41-mm-) diameter pipe.
5. Finish: Manufacturer's standard baked enamel or powder coat.

    a. Color: As selected by Architect from manufacturer's full range

2.3 METAL MATERIALS

A. Aluminum Sheet: ASTM B 209 (ASTM B 209M), manufacturer's standard alloy for finish required, with temper to suit forming operations and performance required.

1. Mill Finish: As manufactured.

B. Aluminum Extrusions and Tubes: ASTM B 221 (ASTM B 221M), manufacturer's standard alloy and temper for type of use, finished to match assembly where used; otherwise mill finished.

C. Stainless-Steel Sheet and Shapes: ASTM A 240/A 240M or ASTM A 666, Type 304.

D. Steel Shapes: ASTM A 36/A 36M, hot-dip galvanized according to ASTM A 123/A 123M unless otherwise indicated.

E. Steel Tube: ASTM A 500/A 500M, round tube.

F. Galvanized-Steel Tube: ASTM A 500/A 500M, round tube, hot-dip galvanized according to ASTM A 123/A 123M.

G. Steel Pipe: ASTM A 53/A 53M, galvanized.

2.4 MISCELLANEOUS MATERIALS

A. General: Provide materials and types of fasteners, protective coatings, sealants, and other miscellaneous items required by manufacturer for a complete installation.

B. Cellulosic-Fiber Board Insulation: ASTM C 208, Type II, Grade 1, thickness as indicated.

C. Polyisocyanurate Board Insulation: ASTM C 1289, thickness and thermal resistivity as indicated.

D. Wood Nailers: Softwood lumber, pressure treated with waterborne preservatives for aboveground use, acceptable to authorities having jurisdiction, containing no arsenic or chromium, and complying with AWPA C2; not less than 1-1/2 inches (38 mm) thick.

E. Bituminous Coating: Cold-applied asphalt emulsion complying with ASTM D 1187/D 1187M.

F. Underlayment:

1. Felt: ASTM D 226/D 226M, Type II (No. 30), asphalt-saturated organic felt, nonperforated.
2. Polyethylene Sheet: 6-mil- (0.15-mm-) thick polyethylene sheet complying with ASTM D 4397.
3. Slip Sheet: Building paper, 3 lb/100 sq. ft. (0.16 kg/sq. m) minimum, rosin sized.
4. Self-Adhering, High-Temperature Sheet: Minimum 30 to 40 mils (0.76 to 1.0 mm) thick, consisting of slip-resisting polyethylene-film top surface laminated to layer of butyl or SBS-modified asphalt adhesive, with release-paper backing; cold applied. Provide primer when recommended by underlayment manufacturer.
5. Fasteners: Roof accessory manufacturer's recommended fasteners suitable for application and metals being fastened. Match finish of exposed fasteners with finish of material being fastened. Provide nonremovable fastener heads to exterior exposed fasteners. Furnish the following unless otherwise indicated:
6. Fasteners for Zinc-Coated or Aluminum-Zinc Alloy-Coated Steel: Series 300 stainless steel or hot-dip zinc-coated steel according to ASTM A 153/A 153M or ASTM F 2329.
7. Fasteners for Aluminum Sheet: Aluminum or Series 300 stainless steel.
8. Fasteners for Stainless-Steel Sheet: Series 300 stainless steel.

G. Gaskets: Manufacturer's standard tubular or fingered design of neoprene, EPDM, PVC, or silicone or a flat design of foam rubber, sponge neoprene, or cork.

H. Elastomeric Sealant: ASTM C 920, elastomeric silicone polymer sealant as recommended by roof accessory manufacturer for installation indicated; low modulus; of type, grade, class, and use classifications required to seal joints and remain watertight.

I. Butyl Sealant: ASTM C 1311, single-component, solvent-release butyl rubber sealant; polyisobutylene plasticized; heavy bodied for expansion joints with limited movement.

J. Asphalt Roofing Cement: ASTM D 4586/D 4586M, asbestos free, of consistency required for application.

2.5 GENERAL FINISH REQUIREMENTS

A. Comply with NAAMM's "Metal Finishes Manual for Architectural and Metal Products" for recommendations for applying and designating finishes.

B. Appearance of Finished Work: Noticeable variations in same piece are not acceptable. Variations in appearance of adjoining components are acceptable if they are within the range of approved Samples and are assembled or installed to minimize contrast.

PART 3 - EXECUTION

3.1 EXAMINATION

A. Examine substrates, areas, and conditions, with Installer present, to verify actual locations, dimensions, and other conditions affecting performance of the Work.

B. Verify that substrate is sound, dry, smooth, clean, sloped for drainage, and securely anchored.

C. Verify dimensions of roof openings for roof accessories.

D. Proceed with installation only after unsatisfactory conditions have been corrected.

3.2 INSTALLATION

A. General: Install roof accessories according to manufacturer's written instructions.

1. Install roof accessories level; plumb; true to line and elevation; and without warping, jogs in alignment, buckling, or tool marks.
2. Anchor roof accessories securely in place so they are capable of resisting indicated loads.
3. Use fasteners, separators, sealants, and other miscellaneous items as required to complete installation of roof accessories and fit them to substrates.
4. Install roof accessories to resist exposure to weather without failing, rattling, leaking, or loosening of fasteners and seals.

B. Metal Protection: Protect metals against galvanic action by separating dissimilar metals from contact with each other or with corrosive substrates by painting contact surfaces with bituminous coating or by other permanent separation as recommended by manufacturer.

1. Coat concealed side of uncoated aluminum roof accessories with bituminous coating where in contact with wood, ferrous metal, or cementitious construction.

2. Underlayment: Where installing roof accessories directly on cementitious or wood substrates, install a course of underlayment and cover with manufacturer's recommended slip sheet.
3. Bed flanges in thick coat of asphalt roofing cement where required by manufacturers of roof accessories for waterproof performance.

C. Roof-Hatch Installation:

1. Verify that roof hatch operates properly. Clean, lubricate, and adjust operating mechanism and hardware.
2. Attach ladder-assist post according to manufacturer's written instructions.

D. Seal joints with elastomeric or butyl sealant as required by roof accessory manufacturer.

3.3 REPAIR AND CLEANING

A. Galvanized Surfaces: Clean field welds, bolted connections, and abraded areas and repair galvanizing according to ASTM A 780/A 780M.

B. Touch up factory-primed surfaces with compatible primer ready for field painting according to Section 099600 "High Performance Coatings written instructions.

C. Clean off excess sealants.

D. Replace roof accessories that have been damaged or that cannot be successfully repaired by finish touchup or similar minor repair procedures.

END OF SECTION 077200

SECTION 077600 ROOF DECKING PAVERS

PART 1 - GENERAL

1.1 SUMMARY

A. Section Includes:
   1. Roof decking pavers and support system.

1.2 ACTION SUBMITTALS

A. Submit per Section 013300 Submittal Procedures

B. Product Data: For each type of product.
   1. Include construction details, material descriptions, dimensions of individual components and profiles, and finishes.

C. Shop Drawings: Include Setting Drawings showing layouts, sizes, sections, profiles, and any other applicable details for pavers and drainage sheet.

D. Samples for Verification:
   1. Include Samples of each type of roof pavers to verify finish and color selection, in manufacturer's standard sizes.

1.3 INFORMATIONAL SUBMITTALS

A. Certificate of Compliance: Submit manufacturer's certificate of compliance indicating materials comply with specified requirements.

B. Manufacturer's Project References:
   1. Submit list of successfully completed projects.
   2. Include project name and location, name of architect, and type and quantity of roof pavers furnished.

C. Installer's Project References:
   1. Submit list of successfully completed projects.
   2. Include project name and location, name of architect, and type and quantity of roof pavers installed.

D. Maintenance Instructions: Submit manufacturer's maintenance and cleaning instructions.

E. Sample Warranty: For manufacturer's special warranty.

1.4 CLOSEOUT SUBMITTALS

A. Maintenance Data: For roofing specialties to include in maintenance manuals.

1.5 QUALITY ASSURANCE

A. Installer's Qualifications:
   1. Successful experience in installation of roof pavers of similar type to that specified, with a minimum of 10 projects completed within last 5 years.
   2. Employ persons trained for installation of roof pavers.
   3. Approved by manufacturer.

B. Mockups: Build mockups to verify selections made under Sample submittals, to demonstrate aesthetic effects, and set quality standards for fabrication and installation.
   1. Build mockup of typical area, approximately 10 feet (3.0 m) long, including supporting construction, seams, attachments, and accessories.
   2. Approval of mockups does not constitute approval of deviations from the Contract Documents contained in mockups unless Architect specifically approves such deviations in writing.

1.6 DELIVERY, STORAGE, AND HANDLING

A. Delivery: Deliver materials to site in manufacturer's original, unopened containers and packaging, with labels clearly identifying product name and manufacturer.

B. Storage:
   1. Store materials in accordance with manufacturer's instructions.
   2. Roof Pavers:
      a. Store roof pavers in a dry area at a minimum temperature of 50 degrees F (10 degrees C) for a minimum of 72 hours before installation.
      b. Protect roof pavers from direct sunlight before installation.
   3. Adhesive: Store adhesive in a dry area at a minimum temperature of 50 degrees F (10 degrees C).

C. Handling: Protect materials during handling and installation to prevent damage.

1.7 FIELD CONDITIONS

A. Field Measurements: Verify profiles and tolerances of roof-specialty substrates by field measurements before fabrication, and indicate measurements on Shop Drawings.

B. Roof Paver Temperature: Ensure surface temperature of roof pavers is a minimum of 40 degrees F (4 degrees C) at time of installation.

C. Air Temperature: Ensure air temperature is a minimum of 40 degrees F (4 degrees C) for a minimum of 24 hours before and during installation.

1.8 WARRANTY

A. Existing Warranties: Remove, replace, patch, and repair materials and surfaces cut or damaged during roof paver work, by methods and with materials so as not to void existing roofing system warranty. Notify warrantor before proceeding.
   1. Notify warrantor of existing roofing system on completion of roofing modifications, and obtain documentation verifying that existing roofing system has been inspected and warranty remains in effect. Submit documentation at Project closeout.

B. Paver Warranty: Manufacturer's shall warranty paver system and installed accessories, to be free from defects in material and workmanship, and agreeing to replace defective materials and components.
   1. Warranty Period: Five years from date of Substantial Completion.

PART 2 - PRODUCTS

2.1 MANUFACTURERS

A. Manufacturers: Subject to compliance with requirements, provide products by one of the following:
   1. Firestone Building Products.
   2. Hanover Architectural Products.
   3. Roofblok Limited.
   4. Sunny Brook Pressed Concrete.
   5. Wausau Tile, Inc.; Terra-Paving Division.
   6. Westile Roofing Products.

B. Basis of Design: Prest Pavers as manufactured by Hanover Architectural Products.

2.2 MATERIALS

A. Roof Pavers: Heavyweight, hydraulically pressed concrete units, square edged, factory cast for use as roof pavers; absorption not greater than 5 percent, ASTM C 140; no breakage and maximum 1 percent mass loss when tested for freeze-thaw resistance, ASTM C 67; and as follows:
   1. Size: 24 by 24 inches (600 by 600 mm). Manufacture pavers to dimensional tolerances of plus or minus 1/16 inch (1.6 mm) in length, height, and thickness.
   2. Weight: 18 lb/sq. ft. (90 kg/sq. m) 22 lb/sq. ft. (110 kg/sq. m).
   3. Compressive Strength: 6500 psi (45 MPa), minimum.
   4. Colors and Textures: As selected by Architect from manufacturer's full range.
   5. Installation pattern as indicated on drawings

B. Support System:
   1. Basis of Design: Hanover, Elevator Pedestal System.
   2. Paver Supports: Paver manufacturer's standard SBR rubber, high-density polyethylene, or polyurethane paver support assembly, including adjustable or stackable pedestals, shims, and spacer tabs for joint spacing of 1/8 to 3/16 inch (3 to 5 mm).
   3. Paver Support Protection Pads: Manufacturer's standard pre-formed roof protection pad cut to extend a minimum 2-inche past the edge of the Paver Support.

PART 3 - EXECUTION

3.1 EXAMINATION

A. Examine substrates, areas, and conditions, with Installer present, to verify actual locations, dimensions, and other conditions affecting performance of the Work.

B. Verify that the roof membrane installation is completed.

C. Verify that all identified defects in the roof membrane have been repaired to the satisfaction of the roof membrane manufacturer prior to installation of pavers.

D. Proceed with installation only after unsatisfactory conditions have been corrected.

3.2 SURFACE PREPARATION

A. All substrates must be clean, dry, smooth, free of sharp edges, fins, loose or foreign materials, oil, grease, and other materials which may damage the roofing membrane, prior to installation.

3.3 INSTALLATION

A. Install pavers in locations indicated according to manufacturer's written instructions.

B. Install roof membrane manufacturer's roof protection pad under each pedestal support, ensuring that it extends a minimum 2-inches past the pedestal base in all directions.
   1. Accurately install adjustable-height paver pedestals and accessories in locations and to elevations required. Adjust for final level and slope with shims.

C. Loosely lay pavers on pedestals, maintaining a uniform open joint width. Tightly seat pavers against spacers to eliminate lateral movement or drift of paving assembly. Align joint patterns parallel in each direction.
   1. Lay out pavers to avoid less-than-half-width pavers at perimeter or other terminations.

D. Install pavers to not vary more than 1/16 inch (1.6 mm) in elevation between adjacent pavers or more than 1/16 inch (1.6 mm) from surface plane elevation of individual paver.

E. Maintain tolerances of paving installation within 1/4 inch in 10 feet (1:48) of surface plane in any direction.

F. Maintain appropriate spacing (1/4-inch minimum) between paver and single ply membrane at vertical base flashings so that the paver does not abrade the roofing membrane.

3.4 CLEANING AND PROTECTION

A. Protect roofing according to manufacturer's written recommendations to prevent damage and wear during application and remainder of construction period.

END OF SECTION 077600

SECTION 078413 - THROUGH-PENETRATION FIRESTOP SYSTEMS

PART 1 - GENERAL

1.1 RELATED DOCUMENTS

A. Drawings and general provisions of the Contract, including General and Supplementary Conditions and Division 1 Specification Sections, apply to this Section.

1.2 SUMMARY

A. Section Includes:

1. Penetrations in fire-resistance-rated walls.
2. Penetrations in horizontal assemblies.
3. Penetrations in smoke barriers.

1.3 SUBMITTALS

A. Product Data: For each type of product indicated.

B. Product Schedule: For each penetration firestopping system. Include location and design designation of qualified testing and inspecting agency.

C. Product Test Reports: Based on evaluation of comprehensive tests performed by a qualified testing agency, for penetration firestopping.

1.4 QUALITY ASSURANCE

A. Installer Qualifications: A firm experienced in installing penetration firestopping similar in material, design, and extent to that indicated for this Project, whose work has resulted in construction with a record of successful performance. Qualifications include having the necessary experience, staff, and training to install manufacturer's products per specified requirements. Manufacturer's willingness to sell its penetration firestopping products to Contractor or to Installer engaged by Contractor does not in itself confer qualification on buyer.

B. Fire-Test-Response Characteristics: Penetration firestopping shall comply with the following requirements:

1. Penetration firestopping tests are performed by a qualified testing agency acceptable to authorities having jurisdiction.
2. Penetration firestopping is identical to those tested per testing standard referenced in "Penetration Firestopping" Article. Provide rated systems complying with the following requirements:

a. Penetration firestopping products bear classification marking of qualified testing and inspecting agency.
b. Classification markings on penetration firestopping correspond to designations listed by the following:

1) UL in its "Fire Resistance Directory."

1.5 PROJECT CONDITIONS

A. Environmental Limitations: Do not install penetration firestopping when ambient or substrate temperatures are outside limits permitted by penetration firestopping manufacturers or when substrates are wet because of rain, frost, condensation, or other causes.

B. Install and cure penetration firestopping per manufacturer's written instructions using natural means of ventilations or, where this is inadequate, forced-air circulation.

1.6 COORDINATION

A. Coordinate construction of openings and penetrating items to ensure that penetration firestopping is installed according to specified requirements.

B. Coordinate sizing of sleeves, openings, core-drilled holes, or cut openings to accommodate penetration firestopping.

PART 2 - PRODUCTS

2.1 MANUFACTURERS

A. Manufacturers: Subject to compliance with requirements, provide products by one of the following:

1. A/D Fire Protection Systems Inc.
2. Grace Construction Products.
3. Hilti, Inc.
4. Johns Manville.
5. Nelson Firestop Products.
6. NUCO Inc.
7. Passive Fire Protection Partners.
8. RectorSeal Corporation.
9. Specified Technologies Inc.
10. 3M Fire Protection Products.
11. Tremco, Inc.; Tremco Fire Protection Systems Group.
12. USG Corporation.

2.2 PENETRATION FIRESTOPPING

A. Provide penetration firestopping that is produced and installed to resist spread of fire according to requirements indicated, resist passage of smoke and other gases, and maintain original fire-resistance rating of construction penetrated. Penetration firestopping systems shall be compatible with one another, with the substrates forming openings, and with penetrating items if any.

B. Penetrations in Fire-Resistance-Rated Walls: Provide penetration firestopping with ratings determined per ASTM E 814 or UL 1479, based on testing at a positive pressure differential of 0.01-inch wg (2.49 Pa).

1. Fire-resistance-rated walls include fire walls, fire-barrier walls, smoke-barrier walls and fire partitions.
2. F-Rating: Not less than the fire-resistance rating of constructions penetrated.

C. Penetrations in Horizontal Assemblies: Provide penetration firestopping with ratings determined per ASTM E 814 or UL 1479, based on testing at a positive pressure differential of 0.01-inch wg (2.49 Pa).

1. Horizontal assemblies include floors.
2. F-Rating: At least 1 hour, but not less than the fire-resistance rating of constructions penetrated.
3. T-Rating: At least 1 hour, but not less than the fire-resistance rating of constructions penetrated except for floor penetrations within the cavity of a wall.

D. Penetrations in Smoke Barriers: Provide penetration firestopping with ratings determined per UL 1479.

1. L-Rating: Not exceeding 5.0 cfm/sq. ft. (0.025 cu. m/s per sq. m) of penetration opening at 0.30-inch wg (74.7 Pa) at both ambient and elevated temperatures.

E. Exposed Penetration Firestopping: Provide products with flame-spread and smoke-developed indexes of less than 25 and 450, respectively, as determined per ASTM E 84.

F. Accessories: Provide components for each penetration firestopping system that are needed to install fill materials and to maintain ratings required. Use only those components specified by penetration firestopping manufacturer and approved by qualified testing and inspecting agency for firestopping indicated.

1. Permanent forming/damming/backing materials, including the following:

    a. Slag-wool-fiber or rock-wool-fiber insulation.
    b. Sealants used in combination with other forming/damming/backing materials to prevent leakage of fill materials in liquid state.
    c. Fire-rated form board.
    d. Fillers for sealants.

2. Temporary forming materials.
3. Substrate primers.
4. Collars.

5. Steel sleeves.

2.3 FILL MATERIALS

A. Cast-in-Place Firestop Devices: Factory-assembled devices for use in cast-in-place concrete floors and consisting of an outer metallic sleeve lined with an intumescent strip, a radial extended flange attached to one end of the sleeve for fastening to concrete formwork, and a neoprene gasket.

B. Latex Sealants: Single-component latex formulations that do not re-emulsify after cure during exposure to moisture.

C. Firestop Devices: Factory-assembled collars formed from galvanized steel and lined with intumescent material sized to fit specific diameter of penetrant.

D. Intumescent Composite Sheets: Rigid panels consisting of aluminum-foil-faced elastomeric sheet bonded to galvanized-steel sheet.

E. Intumescent Putties: Nonhardening dielectric, water-resistant putties containing no solvents, inorganic fibers, or silicone compounds.

F. Intumescent Wrap Strips: Single-component intumescent elastomeric sheets with aluminum foil on one side.

G. Mortars: Prepackaged dry mixes consisting of a blend of inorganic binders, hydraulic cement, fillers, and lightweight aggregate formulated for mixing with water at Project site to form a nonshrinking, homogeneous mortar.

H. Pillows/Bags: Reusable heat-expanding pillows/bags consisting of glass-fiber cloth cases filled with a combination of mineral-fiber, water-insoluble expansion agents, and fire-retardant additives. Where exposed, cover openings with steel-reinforcing wire mesh to protect pillows/bags from being easily removed.

I. Silicone Foams: Multicomponent, silicone-based liquid elastomers that, when mixed, expand and cure in place to produce a flexible, nonshrinking foam.

J. Silicone Sealants: Single-component, silicone-based, neutral-curing elastomeric sealants of grade indicated below:

1. Grade: Pourable (self-leveling) formulation for openings in floors and other horizontal surfaces, and nonsag formulation for openings in vertical and sloped surfaces, unless indicated firestopping limits use of nonsag grade for both opening conditions.

2.4 MIXING

A. For those products requiring mixing before application, comply with penetration firestopping manufacturer's written instructions for accurate proportioning of materials, water (if required), type of mixing equipment, selection of mixer speeds, mixing

containers, mixing time, and other items or procedures needed to produce products of uniform quality with optimum performance characteristics for application indicated.

PART 3 - EXECUTION

3.1 EXAMINATION

A. Examine substrates and conditions, with Installer present, for compliance with requirements for opening configurations, penetrating items, substrates, and other conditions affecting performance of the Work.

B. Proceed with installation only after unsatisfactory conditions have been corrected.

3.2 PREPARATION

A. Surface Cleaning: Clean out openings immediately before installing penetration firestopping to comply with manufacturer's written instructions and with the following requirements:

1. Remove from surfaces of opening substrates and from penetrating items foreign materials that could interfere with adhesion of penetration firestopping.
2. Clean opening substrates and penetrating items to produce clean, sound surfaces capable of developing optimum bond with penetration firestopping. Remove loose particles remaining from cleaning operation.
3. Remove laitance and form-release agents from concrete.

B. Priming: Prime substrates where recommended in writing by manufacturer using that manufacturer's recommended products and methods. Confine primers to areas of bond; do not allow spillage and migration onto exposed surfaces.

C. Masking Tape: Use masking tape to prevent penetration firestopping from contacting adjoining surfaces that will remain exposed on completion of the Work and that would otherwise be permanently stained or damaged by such contact or by cleaning methods used to remove stains. Remove tape as soon as possible without disturbing firestopping's seal with substrates.

3.3 INSTALLATION

A. General: Install penetration firestopping to comply with manufacturer's written installation instructions and published drawings for products and applications indicated.

B. Install forming materials and other accessories of types required to support fill materials during their application and in the position needed to produce cross-sectional shapes and depths required to achieve fire ratings indicated.

1. After installing fill materials and allowing them to fully cure, remove combustible forming materials and other accessories not indicated as permanent components of firestopping.

C. Install fill materials for firestopping by proven techniques to produce the following results:

1. Fill voids and cavities formed by openings, forming materials, accessories, and penetrating items as required to achieve fire-resistance ratings indicated.
2. Apply materials so they contact and adhere to substrates formed by openings and penetrating items.
3. For fill materials that will remain exposed after completing the Work, finish to produce smooth, uniform surfaces that are flush with adjoining finishes.

3.4 CLEANING AND PROTECTION

A. Clean off excess fill materials adjacent to openings as the Work progresses by methods and with cleaning materials that are approved in writing by penetration firestopping manufacturers and that do not damage materials in which openings occur.

B. Provide final protection and maintain conditions during and after installation that ensure that penetration firestopping is without damage or deterioration at time of Substantial Completion. If, despite such protection, damage or deterioration occurs, immediately cut out and remove damaged or deteriorated penetration firestopping and install new materials to produce systems complying with specified requirements.

END OF SECTION 078413

SECTION 078443 - JOINT FIRESTOPPING

PART 1 - GENERAL

1.1 RELATED DOCUMENTS

A. Drawings and general provisions of the Contract, including General and Supplementary Conditions and Division 01 Specification Sections, apply to this Section.

1.2 SUMMARY

A. Section Includes:

1. Joints in or between fire-resistance-rated constructions.
2. Joints at exterior curtain-wall/floor intersections.
3. Joints in smoke barriers.

1.3 ACTION SUBMITTALS

A. Product Data: For each type of product.

B. Product Schedule: For each joint firestopping system. Include location, illustration of firestopping system, and design designation of qualified testing agency.

1.4 INFORMATIONAL SUBMITTALS

A. Qualification Data: For Installer.

B. Product Test Reports: For each joint firestopping system, for tests performed by a qualified testing agency.

1.5 CLOSEOUT SUBMITTALS

A. Installer Certificates: From Installer indicating that joint firestopping systems have been installed in compliance with requirements and manufacturer's written instructions.

1.6 QUALITY ASSURANCE

A. Installer Qualifications: A firm that has been approved by FM Global according to FM Global 4991, "Approval of Firestop Contractors," or been evaluated by UL and found to comply with UL's "Qualified Firestop Contractor Program Requirements."

1.7 PROJECT CONDITIONS

A. Environmental Limitations: Do not install joint firestopping systems when ambient or substrate temperatures are outside limits permitted by joint firestopping system manufacturers or when substrates are wet due to rain, frost, condensation, or other causes.

B. Install and cure joint firestopping systems per manufacturer's written instructions using natural means of ventilation or, where this is inadequate, forced-air circulation.

1.8 COORDINATION

A. Coordinate construction of joints to ensure that joint firestopping systems can be installed according to specified firestopping system design.

B. Coordinate sizing of joints to accommodate joint firestopping systems.

PART 2 - PRODUCTS

2.1 PERFORMANCE REQUIREMENTS

A. Fire-Test-Response Characteristics:

1. Perform joint firestopping system tests by a qualified testing agency acceptable to authorities having jurisdiction.
2. Test per testing standards referenced in "Joint Firestopping Systems" Article. Provide rated systems complying with the following requirements:

a. Joint firestopping systems shall bear classification marking of a qualified testing agency.

1) UL in its "Fire Resistance Directory."

2.2 JOINT FIRESTOPPING SYSTEMS

A. Joint Firestopping Systems: Systems that resist spread of fire, passage of smoke and other gases, and maintain original fire-resistance rating of assemblies in or between which joint firestopping systems are installed. Joint firestopping systems shall accommodate building movements without impairing their ability to resist the passage of fire and hot gases.

B. Joints in or between Fire-Resistance-Rated Construction: Provide joint firestopping systems with ratings determined per ASTM E 1966 or UL 2079.

1. Manufacturers: Subject to compliance with requirements, available manufacturers offering products that may be incorporated into the Work include, but are not limited to the following:

    a. 3M Fire Protection Products.
    b. Grabber Construction Products.
    c. Hilti, Inc.
    d. Specified Technologies, Inc.
    e. Tremco, Inc.

2. Fire-Resistance Rating: Equal to or exceeding the fire-resistance rating of the wall, floor, or roof in or between which it is installed.

C. Joints at Exterior Curtain-Wall/Floor Intersections: Provide joint firestopping systems with rating determined per ASTM E2307.

1. Manufacturers: Subject to compliance with requirements, available manufacturers offering products that may be incorporated into the Work include, but are not limited to the following:

    a. 3M Fire Protection Products.
    b. Hilti, Inc.
    c. Specified Technologies, Inc.
    d. Tremco, Inc.

2. F-Rating: Equal to or exceeding the fire-resistance rating of the floor assembly.

D. Joints in Smoke Barriers: Provide fire-resistive joint systems with ratings determined per UL 2079 based on testing at a positive pressure differential of 0.30-inch wg (74.7 Pa).

1. Manufacturers: Subject to compliance with requirements, provide products by one of the following:

    a. 3M Fire Protection Products.
    b. Hilti, Inc.
    c. Specified Technologies, Inc.
    d. Tremco, Inc.

2. L-Rating: Not exceeding 5.0 cfm/ft. (0.00775 cu. m/s x m) of joint at both ambient and elevated temperatures.

E. Exposed Joint Firestopping Systems: Flame-spread and smoke-developed indexes of less than 25 and 450, respectively, as determined per ASTM E 84.

F. VOC Content: Fire-resistive joint system sealants shall comply with the following limits for VOC content:

1. Architectural Sealants: 250 g/L.
2. Sealant Primers for Nonporous Substrates: 250 g/L.
3. Sealant Primers for Porous Substrates: 775 g/L.

G. Accessories: Provide components of fire-resistive joint systems, including primers and forming materials, that are needed to install elastomeric fill materials and to maintain ratings required. Use only components specified by joint firestopping system manufacturer and approved by the qualified testing agency for conditions indicated.

PART 3 - EXECUTION

3.1 EXAMINATION

A. Examine substrates and conditions, with Installer present, for compliance with requirements for joint configurations, substrates, and other conditions affecting performance of the Work.

B. Proceed with installation only after unsatisfactory conditions have been corrected.

3.2 PREPARATION

A. Surface Cleaning: Before installing fire-resistive joint systems, clean joints immediately to comply with fire-resistive joint system manufacturer's written instructions and the following requirements:

1. Remove from surfaces of joint substrates foreign materials that could interfere with adhesion of elastomeric fill materials or compromise fire-resistive rating.
2. Clean joint substrates to produce clean, sound surfaces capable of developing optimum bond with elastomeric fill materials. Remove loose particles remaining from cleaning operation.
3. Remove laitance and form-release agents from concrete.

B. Prime substrates where recommended in writing by joint firestopping system manufacturer using that manufacturer's recommended products and methods. Confine primers to areas of bond; do not allow spillage and migration onto exposed surfaces.

3.3 INSTALLATION

A. General: Install fire-resistive joint systems to comply with manufacturer's written installation instructions and published drawings for products and applications indicated.

B. Install forming materials and other accessories of types required to support elastomeric fill materials during their application and in position needed to produce cross-sectional shapes and depths required to achieve fire ratings indicated.

1. After installing elastomeric fill materials and allowing them to fully cure, remove combustible forming materials and other accessories not indicated as permanent components of fire-resistive joint system.

C. Install elastomeric fill materials for fire-resistive joint systems by proven techniques to produce the following results:

1. Elastomeric fill voids and cavities formed by joints and forming materials as required to achieve fire-resistance ratings indicated.
2. Apply elastomeric fill materials so they contact and adhere to substrates formed by joints.
3. For elastomeric fill materials that will remain exposed after completing the Work, finish to produce smooth, uniform surfaces that are flush with adjoining finishes.

3.4 CLEANING AND PROTECTION

A. Clean off excess elastomeric fill materials adjacent to joints as the Work progresses by methods and with cleaning materials that are approved in writing by joint firestopping system manufacturers and that do not damage materials in which joints occur.

B. Provide final protection and maintain conditions during and after installation that ensure joint firestopping systems are without damage or deterioration at time of Substantial Completion. If damage or deterioration occurs despite such protection, cut out and remove damaged or deteriorated fire-resistive joint systems immediately and install new materials to produce fire-resistive joint systems complying with specified requirements.

3.5 JOINT FIRESTOPPING SYSTEM SCHEDULE

A. Where UL-classified systems are indicated, they refer to system numbers in UL's "Fire Resistance Directory" under product **Category XHBN or Category XHDG**.

B. Head-of-Wall, Fire-Resistive Joint Firestopping Systems:

1. UL-Classified Systems: HW-**D**-0042 or HW-D-0049.
2. Assembly Rating: as indicated
3. Nominal Joint Width: as indicated

C. Perimeter Joint Firestopping Systems at Curtainwall:

1. Intertek HI/BP 60-01

END OF SECTION 078443

SECTION 079200 - JOINT SEALANTS

PART 1 - GENERAL

1.1 RELATED DOCUMENTS

A. Drawings and general provisions of the Contract, including General and Supplementary Conditions and Division 1 Specification Sections, apply to this Section.

1.2 SUMMARY

A. Section Includes:

1. Silicone joint sealants.
2. Latex joint sealants.
3. Acoustical joint sealants.

1.3 PRECONSTRUCTION TESTING

A. Preconstruction Field-Adhesion Testing: Before installing sealants, field test their adhesion to Project joint substrates as follows:

1. Locate test joints where indicated on Project or, if not indicated, as directed by Architect.
2. Conduct field tests for each application indicated below:

    a. Each kind of sealant and joint substrate indicated.

3. Notify Architect seven days in advance of dates and times when test joints will be erected.
4. Arrange for tests to take place with joint-sealant manufacturer's technical representative present.

    a. Test Method: Test joint sealants according to Method A, Field-Applied Sealant Joint Hand Pull Tab, in Appendix X1 in ASTM C 1193 or Method A, Tail Procedure, in ASTM C 1521.

        1) For joints with dissimilar substrates, verify adhesion to each substrate separately; extend cut along one side, verifying adhesion to opposite side. Repeat procedure for opposite side.

5. Report whether sealant failed to adhere to joint substrates or tore cohesively. Include data on pull distance used to test each kind of product and joint substrate. For sealants that fail adhesively, retest until satisfactory adhesion is obtained.
6. Evaluation of Preconstruction Field-Adhesion-Test Results: Sealants not evidencing adhesive failure from testing, in absence of other indications of

noncompliance with requirements, will be considered satisfactory. Do not use sealants that fail to adhere to joint substrates during testing.

1.4 SUBMITTALS

A. Product Data: For each joint-sealant product indicated.

B. Samples for Initial Selection: Manufacturer's color charts consisting of strips of cured sealants showing the full range of colors available for each product exposed to view.

C. Samples for Verification: For each kind and color of joint sealant required, provide Samples with joint sealants in 1/2-inch- (13-mm-) wide joints formed between two 6-inch- (150-mm-) long strips of material matching the appearance of exposed surfaces adjacent to joint sealants.

D. Joint-Sealant Schedule: Include the following information:

1. Joint-sealant application, joint location, and designation.
2. Joint-sealant manufacturer and product name.
3. Joint-sealant formulation.
4. Joint-sealant color.

E. Qualification Data: For qualified Installer.

F. Product Certificates: For each kind of joint sealant and accessory, from manufacturer.

G. Sealant, Waterproofing, and Restoration Institute (SWRI) Validation Certificate: For each sealant specified to be validated by SWRI's Sealant Validation Program.

H. Product Test Reports: Based on evaluation of comprehensive tests performed by a qualified testing agency, indicating that sealants comply with requirements.

I. Preconstruction Compatibility and Adhesion Test Reports: From sealant manufacturer, indicating the following:

1. Materials forming joint substrates and joint-sealant backings have been tested for compatibility and adhesion with joint sealants.
2. Interpretation of test results and written recommendations for primers and substrate preparation needed for adhesion.

J. Preconstruction Field-Adhesion Test Reports: Indicate which sealants and joint preparation methods resulted in optimum adhesion to joint substrates based on testing specified in "Preconstruction Testing" Article.

K. Field-Adhesion Test Reports: For each sealant application tested.

L. Warranties: Sample of special warranties.

1.5 QUALITY ASSURANCE

A. Installer Qualifications: Manufacturer's authorized representative who is trained and approved for installation of units required for this Project.

B. Source Limitations: Obtain each kind of joint sealant from single source from single manufacturer.

C. Product Testing: Test joint sealants using a qualified testing agency.

1. Testing Agency Qualifications: An independent testing agency qualified according to ASTM C 1021 to conduct the testing indicated.
2. Test according to SWRI's Sealant Validation Program for compliance with requirements specified by reference to ASTM C 920 for adhesion and cohesion under cyclic movement, adhesion-in-peel, and indentation hardness.

D. Mockups: Install sealant in mockups of assemblies specified in other Sections that are indicated to receive joint sealants specified in this Section. Use materials and installation methods specified in this Section.

1.6 PROJECT CONDITIONS

A. Do not proceed with installation of joint sealants under the following conditions:

1. When ambient and substrate temperature conditions are outside limits permitted by joint-sealant manufacturer or are below 40 deg F (5 deg C).
2. When joint substrates are wet.
3. Where joint widths are less than those allowed by joint-sealant manufacturer for applications indicated.
4. Where contaminants capable of interfering with adhesion have not yet been removed from joint substrates.

1.7 WARRANTY

A. Special Installer's Warranty: Manufacturer's standard form in which Installer agrees to repair or replace joint sealants that do not comply with performance and other requirements specified in this Section within specified warranty period.

1. Warranty Period: Two years from date of Substantial Completion.

B. Special Manufacturer's Warranty: Manufacturer's standard form in which joint-sealant manufacturer agrees to furnish joint sealants to repair or replace those that do not comply with performance and other requirements specified in this Section within specified warranty period.

1. Warranty Period: Five years from date of Substantial Completion.

C. Special warranties specified in this article exclude deterioration or failure of joint sealants from the following:

1. Movement of the structure caused by structural settlement or errors attributable to design or construction resulting in stresses on the sealant exceeding sealant manufacturer's written specifications for sealant elongation and compression.
2. Disintegration of joint substrates from natural causes exceeding design specifications.
3. Mechanical damage caused by individuals, tools, or other outside agents.
4. Changes in sealant appearance caused by accumulation of dirt or other atmospheric contaminants.

PART 2 - PRODUCTS

2.1 MATERIALS, GENERAL

A. Compatibility: Provide joint sealants, backings, and other related materials that are compatible with one another and with joint substrates under conditions of service and application, as demonstrated by joint-sealant manufacturer, based on testing and field experience.

B. Stain-Test-Response Characteristics: Where sealants are specified to be nonstaining to porous substrates, provide products that have undergone testing according to ASTM C 1248 and have not stained porous joint substrates indicated for Project.

C. Colors of Exposed Joint Sealants: As selected by Architect from manufacturer's full range.

2.2 SILICONE JOINT SEALANTS

A. Single-Component, Nonsag, Neutral-Curing Silicone Joint Sealant: ASTM C 920, Type S, Grade NS, Class 50, for Use NT.

1. Products: Subject to compliance with requirements, provide one of the following.
   a. Dow Corning Corporation; 795.
   b. Tremco Incorporated; Spectrem 2.

B. Single-Component, Nonsag, Traffic-Grade, Neutral-Curing Silicone Joint Sealant: ASTM C 920, Type S, Grade NS, Class 100/50, for Use T.

1. Products: Subject to compliance with requirements, provide one of the following:

   a. Dow Corning Corporation; NS Parking Structure Sealant.
   b. Tremco Incorporated; Spectrem 800.

C. Mildew-Resistant, Single-Component, Acid-Curing Silicone Joint Sealant: ASTM C 920, Type S, Grade NS, Class 25, for Use NT.

1. Products: Subject to compliance with requirements, provide one of the following:
   a. Dow Corning Corporation; 786 Mildew Resistant.
   b. GE Advanced Materials - Silicones; Sanitary SCS1700.
   c. Tremco Incorporated; Tremsil 200 Sanitary.

D. Single-Component, Neutral-Curing Silicone Joint Sealant: between air barrier and window system

1. Products: Subject to compliance with requirements, provide one of the following.
   a. Silicone Sealant as recommended by Air Barrier Manufacturer for intended application.

2.3 LATEX JOINT SEALANTS

A. Latex Joint Sealant: Acrylic latex or siliconized acrylic latex, ASTM C 834, Type OP, Grade NF.

1. Products: Subject to compliance with requirements, provide one of the following:
   a. Pecora Corporation; AC-20+.
   b. Tremco Incorporated; Tremflex 834.

2.4 ACOUSTICAL JOINT SEALANTS

A. Acoustical Joint Sealant: Manufacturer's standard nonsag, paintable, nonstaining latex sealant complying with ASTM C 834. Product effectively reduces airborne sound transmission through perimeter joints and openings in building construction as demonstrated by testing representative assemblies according to ASTM E 90.

1. Products: Subject to compliance with requirements, provide one of the following:

   a. Pecora Corporation; AC-20 FTR.
   b. USG Corporation; SHEETROCK Acoustical Sealant.

2.5 JOINT SEALANT BACKING

A. General: Provide sealant backings of material that are nonstaining; are compatible with joint substrates, sealants, primers, and other joint fillers; and are approved for applications indicated by sealant manufacturer based on field experience and laboratory testing.

B. Cylindrical Sealant Backings: ASTM C 1330, Type C (closed-cell material with a surface skin), Type O (open-cell material), Type B (bicellular material with a surface skin) or any of the preceding types, as approved in writing by joint-sealant manufacturer for joint application indicated, and of size and density to control sealant depth and otherwise contribute to producing optimum sealant performance.

C. Bond-Breaker Tape: Polyethylene tape or other plastic tape recommended by sealant manufacturer for preventing sealant from adhering to rigid, inflexible joint-filler materials or joint surfaces at back of joint. Provide self-adhesive tape where applicable.

2.6 MISCELLANEOUS MATERIALS

A. Primer: Material recommended by joint-sealant manufacturer where required for adhesion of sealant to joint substrates indicated, as determined from preconstruction joint-sealant-substrate tests and field tests.

B. Cleaners for Nonporous Surfaces: Chemical cleaners acceptable to manufacturers of sealants and sealant backing materials, free of oily residues or other substances capable of staining or harming joint substrates and adjacent nonporous surfaces in any way, and formulated to promote optimum adhesion of sealants to joint substrates.

C. Masking Tape: Nonstaining, nonabsorbent material compatible with joint sealants and surfaces adjacent to joints.

PART 3 - EXECUTION

3.1 EXAMINATION

A. Examine joints indicated to receive joint sealants, with Installer present, for compliance with requirements for joint configuration, installation tolerances, and other conditions affecting joint-sealant performance.

B. Proceed with installation only after unsatisfactory conditions have been corrected.

3.2 PREPARATION

A. Surface Cleaning of Joints: Clean out joints immediately before installing joint sealants to comply with joint-sealant manufacturer's written instructions and the following requirements:

1. Remove all foreign material from joint substrates that could interfere with adhesion of joint sealant, including dust, paints (except for permanent, protective coatings tested and approved for sealant adhesion and compatibility by sealant manufacturer), old joint sealants, oil, grease, waterproofing, water repellents, water, surface dirt, and frost.
2. Clean porous joint substrate surfaces by brushing, grinding, mechanical abrading, or a combination of these methods to produce a clean, sound substrate capable of developing optimum bond with joint sealants. Remove loose particles remaining after cleaning operations above by vacuuming or blowing out joints with oil-free compressed air. Porous joint substrates include the following:

    a. Concrete.
    b. Masonry.
    c. Unglazed surfaces of ceramic tile.

3. Remove laitance and form-release agents from concrete.
4. Clean nonporous joint substrate surfaces with chemical cleaners or other means that do not stain, harm substrates, or leave residues capable of interfering with adhesion of joint sealants. Nonporous joint substrates include the following:

a. Metal.
b. Glass.
c. Porcelain enamel.
d. Glazed surfaces of ceramic tile.

B. Joint Priming: Prime joint substrates where recommended by joint-sealant manufacturer or as indicated by preconstruction joint-sealant-substrate tests or prior experience. Apply primer to comply with joint-sealant manufacturer's written instructions. Confine primers to areas of joint-sealant bond; do not allow spillage or migration onto adjoining surfaces.

C. Masking Tape: Use masking tape where required to prevent contact of sealant or primer with adjoining surfaces that otherwise would be permanently stained or damaged by such contact or by cleaning methods required to remove sealant smears. Remove tape immediately after tooling without disturbing joint seal.

3.3 INSTALLATION OF JOINT SEALANTS

A. General: Comply with joint-sealant manufacturer's written installation instructions for products and applications indicated, unless more stringent requirements apply.

B. Sealant Installation Standard: Comply with recommendations in ASTM C 1193 for use of joint sealants as applicable to materials, applications, and conditions indicated.

C. Install sealant backings of kind indicated to support sealants during application and at position required to produce cross-sectional shapes and depths of installed sealants relative to joint widths that allow optimum sealant movement capability.

1. Do not leave gaps between ends of sealant backings.
2. Do not stretch, twist, puncture, or tear sealant backings.
3. Remove absorbent sealant backings that have become wet before sealant application and replace them with dry materials.

D. Install bond-breaker tape behind sealants where sealant backings are not used between sealants and backs of joints.

E. Install sealants using proven techniques that comply with the following and at the same time backings are installed:

1. Place sealants so they directly contact and fully wet joint substrates.
2. Completely fill recesses in each joint configuration.
3. Produce uniform, cross-sectional shapes and depths relative to joint widths that allow optimum sealant movement capability.

F. Tooling of Nonsag Sealants: Immediately after sealant application and before skinning or curing begins, tool sealants according to requirements specified in subparagraphs below to form smooth, uniform beads of configuration indicated; to eliminate air pockets; and to ensure contact and adhesion of sealant with sides of joint.

1. Remove excess sealant from surfaces adjacent to joints.

2. Use tooling agents that are approved in writing by sealant manufacturer and that do not discolor sealants or adjacent surfaces.
3. Provide concave joint profile per Figure 8A in ASTM C 1193, unless otherwise indicated.
4. Provide flush joint profile where indicated per Figure 8B in ASTM C 1193.
5. Provide recessed joint configuration of recess depth and at locations indicated per Figure 8C in ASTM C 1193.

    a. Use masking tape to protect surfaces adjacent to recessed tooled joints.

G. Acoustical Sealant Installation: At sound-rated assemblies and elsewhere as indicated, seal construction at perimeters, behind control joints, and at openings and penetrations with a continuous bead of acoustical sealant. Install acoustical sealant at both faces of partitions at perimeters and through penetrations. Comply with ASTM C 919 and with manufacturer's written recommendations.

3.4 FIELD QUALITY CONTROL

A. Field-Adhesion Testing: Field test joint-sealant adhesion to joint substrates as follows:

1. Extent of Testing: Test completed and cured sealant joints as follows:

    a. Perform 10 tests for the first 1000 feet (300 m) of joint length for each kind of sealant and joint substrate.
    b. Perform 1 test for each 1000 feet (300 m) of joint length thereafter or 1 test per each floor per elevation.

2. Test Method: Test joint sealants according to Method A, Field-Applied Sealant Joint Hand Pull Tab, in Appendix X1 in ASTM C 1193 or Method A, Tail Procedure, in ASTM C 1521.

    a. For joints with dissimilar substrates, verify adhesion to each substrate separately; extend cut along one side, verifying adhesion to opposite side. Repeat procedure for opposite side.

3. Inspect tested joints and report on the following:

    a. Whether sealants filled joint cavities and are free of voids.
    b. Whether sealant dimensions and configurations comply with specified requirements.
    c. Whether sealants in joints connected to pulled-out portion failed to adhere to joint substrates or tore cohesively. Include data on pull distance used to test each kind of product and joint substrate. Compare these results to determine if adhesion passes sealant manufacturer's field-adhesion hand-pull test criteria.

4. Record test results in a field-adhesion-test log. Include dates when sealants were installed, names of persons who installed sealants, test dates, test locations, whether joints were primed, adhesion results and percent elongations, sealant fill, sealant configuration, and sealant dimensions.

5. Repair sealants pulled from test area by applying new sealants following same procedures used originally to seal joints. Ensure that original sealant surfaces are clean and that new sealant contacts original sealant.

B. Evaluation of Field-Adhesion Test Results: Sealants not evidencing adhesive failure from testing or noncompliance with other indicated requirements will be considered satisfactory. Remove sealants that fail to adhere to joint substrates during testing or to comply with other requirements. Retest failed applications until test results prove sealants comply with indicated requirements.

3.5 CLEANING

A. Clean off excess sealant or sealant smears adjacent to joints as the Work progresses by methods and with cleaning materials approved in writing by manufacturers of joint sealants and of products in which joints occur.

3.6 PROTECTION

A. Protect joint sealants during and after curing period from contact with contaminating substances and from damage resulting from construction operations or other causes so sealants are without deterioration or damage at time of Substantial Completion. If, despite such protection, damage or deterioration occurs, cut out and remove damaged or deteriorated joint sealants immediately so installations with repaired areas are indistinguishable from original work.

3.7 JOINT-SEALANT SCHEDULE

A. Joint-Sealant Application: Exterior joints in horizontal traffic surfaces.

1. Joint Locations:
   a. Isolation and contraction joints in cast-in-place concrete slabs.
   b. Other joints as indicated.

2. Silicone Joint Sealant: Single component, nonsag, traffic grade, neutral curing

B. Joint-Sealant Application: Exterior joints in vertical surfaces and horizontal nontraffic surfaces.

1. Joint Locations:
   a. Control and expansion joints in unit masonry.
   b. Joints between different materials.
   c. Perimeter joints between materials listed above and frames of doors, windows and louvers.
   d. Control and expansion joints in ceilings and other overhead surfaces.
   e. Other joints as indicated.

2. Silicone Joint Sealant: Single component, nonsag, neutral curing, Class 50
3. Joint-Sealant Color: As selected by Architect from manufacturer's full range of colors.

C. Joint-Sealant Application: Interior joints in vertical surfaces and horizontal nontraffic surfaces.

1. Joint Locations:

   a. Control and expansion joints on exposed interior surfaces of exterior walls.
   b. Perimeter joints of exterior openings where indicated.
   c. Tile control and expansion joints.
   d. Vertical joints on exposed surfaces of walls and partitions.
   e. Perimeter joints between interior wall surfaces and frames of interior doors, windows and elevator entrances.
   f. Other joints as indicated.

2. Joint Sealant: Acrylic latex or siliconized acrylic latex
3. Joint-Sealant Color: As selected by Architect from manufacturer's full range of colors.

D. Joint-Sealant Application: Interior joints in vertical surfaces of cmu walls.

1. Joint Locations:

   a. Control and expansion joints on exposed interior surfaces of exterior walls.
   b. Vertical joints on exposed surfaces of walls and partitions.

2. Joint Sealant: Acrylic latex or siliconized acrylic latex
3. Joint-Sealant Color: As selected by Architect from manufacturer's full range of colors. *Note: Contractor shall verify compatibility of sealant and wall paint prior to beginning work.*

E. Joint-Sealant Application: Mildew-resistant interior joints in vertical surfaces and horizontal nontraffic surfaces.

1. Joint Sealant Location:

   a. Joints between plumbing fixtures and adjoining walls, floors, and counters.
   b. Tile control and expansion joints where indicated.
   c. Other joints as indicated.

2. Joint Sealant: Single component, nonsag, mildew resistant, acid curing.
3. Joint-Sealant Color: As selected by Architect from manufacturer's full range of colors.

F. Joint-Sealant Application: Interior acoustical joints in vertical surfaces and horizontal nontraffic surfaces.

1. Joint Location:

   a. Acoustical joints where indicated.
   b. Other joints as indicated.

2. Joint Sealant: Acoustical.

3. Joint-Sealant Color: As selected by Architect from manufacturer's full range.

G. Joint-Sealant Application: Joint between air barrier and window system

1. Products: Subject to compliance with requirements, provide one of the following.
   a. Silicone Sealant as recommended by Air Barrier Manufacturer for intended application.

END OF SECTION 079200

SECTION 07 92 00 - JOINT SEALANTS FOR PAVING

PART 1 - GENERAL

1.1 RELATED DOCUMENTS

A. Drawings and general provisions of the Contract, including General and Supplementary Conditions and Division 01 Specification Sections, apply to this Section.

1.2 SUMMARY

A. Section Includes:
   1. Urethane joint sealants.
   2. Preformed joint sealants.

1.3 ACTION SUBMITTALS

A. Product Data: For each joint-sealant product indicated.

B. Samples: For each kind and color of joint sealant required.

C. Joint-Sealant Schedule: Include the following information:
   1. Joint-sealant application, joint location, and designation.
   2. Joint-sealant manufacturer and product name.
   3. Joint-sealant formulation.
   4. Joint-sealant color.

1.4 INFORMATIONAL SUBMITTALS

A. Qualification Data: For qualified Installer

B. Product Certificates: For each kind of joint sealant and accessory, from manufacturer.

C. Product Test Reports: Based on evaluation of comprehensive tests performed by a qualified testing agency, indicating that sealants comply with requirements.

D. Preconstruction compatibility and adhesion test reports.

E. Preconstruction field-adhesion test reports.

F. Warranties: Sample of special warranties.

1.5 QUALITY ASSURANCE

A. Testing Agency Qualifications: Qualified according to ASTM C 1021 to conduct the testing indicated.

B. Preinstallation Conference: Conduct conference at Project site.

C. Source Limitations: Obtain each kind of joint sealant from single source from single manufacturer.

1.6 PROJECT CONDITIONS

A. Do not proceed with installation of joint sealants under the following conditions:
   1. When ambient and substrate temperature conditions are outside limits permitted by joint-sealant manufacturer or are below 40 deg F
   2. When joint substrates are wet.
   3. Where joint widths are less than those allowed by joint-sealant manufacturer for applications indicated.

4. Where contaminants capable of interfering with adhesion have not yet been removed from joint substrates.

1.7 WARRANTY

A. Special Installer's Warranty: Manufacturer's standard form in which Installer agrees to repair or replace
joint sealants that do not comply with performance and other requirements specified in this Section within specified warranty period.
1. Warranty Period: Two years from date of Substantial Completion.

PART 2 - PRODUCTS

2.1 MATERIALS, GENERAL

A. Compatibility: Provide joint sealants, backings, and other related materials that are compatible with one another and with joint substrates under conditions of service and application, as demonstrated by joint-sealant manufacturer, based on testing and field experience.

B. Liquid-Applied Joint Sealants: Comply with ASTM C 920 and other requirements indicated for each liquid-applied joint sealant specified, including those referencing ASTM C 920 classifications for type, grade, class, and uses related to exposure and joint substrates.
1. Suitability for Immersion in Liquids. Where sealants are indicated for Use I for joints that will be continuously immersed in liquids, provide products that have undergone testing according to ASTM C 1247. Liquid used for testing sealants is deionized water, unless otherwise indicated.

C. Stain-Test-Response Characteristics: Where sealants are specified to be non-staining to porous substrates, provide products that have undergone testing according to ASTM C 1248 and have not stained porous joint substrates indicated for Project.

D. Colors of Exposed Joint Sealants: As selected by Landscape Architect from manufacturer's full range.

2.2 URETHANE JOINT SEALANTS

A. Single-Component, Non-sag, Urethane Joint Sealant: ASTM C 920, Type S, Grade NS, Class 25, for Use NT.
1. Products: Subject to compliance with requirements, provide products by one of the following:
a. BASF Building Systems.
b. Pecora Corporation.
c. Sika Corporation.
d. Tremco Incorporated.

2.3 SILICONE JOINT SEALANTS

A. Manufacturers: Subject to compliance with requirements, provide products from one of the following:
1. Dow Corning Corporation.
2. GE Advanced Materials – Silicones.
3. Tremco Incorporated.

B. Neutral-Curing Silicone Joint Sealant: ASTM C 920.
1. Type: Single Component (S).
2. Grade: Non-sag (NS).
3. Class: 50.

4. Uses Related to Exposure: Nontraffic (NT).

2.4 JOINT SEALANT BACKING

A. General: Provide sealant backings of material that are non-staining; are compatible with joint substrates, sealants, primers, and other joint fillers; and are approved for applications indicated by sealant manufacturer based on field experience and laboratory testing.

B. Cylindrical Sealant Backings: ASTM C 1330, Type C (closed-cell material with a surface skin), and of size and density to control sealant depth and otherwise contribute to producing optimum sealant performance.

2.5 MISCELLANEOUS MATERIALS

A. Primer: Material recommended by joint-sealant manufacturer where required for adhesion of sealant to joint substrates indicated, as determined from preconstruction joint-sealant-substrate tests and field tests.

B. Cleaners for Nonporous Surfaces: Chemical cleaners acceptable to manufacturers of sealants and sealant backing materials, free of oily residues or other substances capable of staining or harming joint substrates and adjacent nonporous surfaces in any way, and formulated to promote optimum adhesion of sealants to joint substrates.

C. Masking Tape: Non-staining, nonabsorbent material compatible with joint sealants and surfaces adjacent to joints.

PART 3 - EXECUTION

3.1 EXAMINATION

A. Examine joints indicated to receive joint sealants, with Installer present, for compliance with requirements for joint configuration, installation tolerances, and other conditions affecting joint-sealant performance.

B. Proceed with installation only after unsatisfactory conditions have been corrected.

3.2 PREPARATION

A. Surface Cleaning of Joints: Clean out joints immediately before installing joint sealants to comply with joint-sealant manufacturer's written instructions and the following requirements:
   1. Remove all foreign material from joint substrates that could interfere with adhesion of joint sealant, including dust, paints (except for permanent, protective coatings tested and approved for sealant adhesion and compatibility by sealant manufacturer), old joint sealants, oil, grease, waterproofing, water repellents, water, surface dirt, and frost.
   2. Clean, porous joint substrate surfaces by brushing, grinding, mechanical abrading, or a combination of these methods to produce a clean, sound substrate capable of developing optimum bond with joint sealants. Remove loose particles remaining after cleaning operations above by vacuuming or blowing out joints with oil-free compressed air. Porous joint substrates include the following:
      a. Concrete.
      b. Masonry
   3. Remove laitance and form-release agents from concrete.
   4. Clean nonporous joint substrate surfaces with chemical cleaners or other means that do not stain, harm substrates, or leave residues capable of interfering with adhesion of joint sealants. Nonporous joint substrates include the following:
      a. Metal.

b. Glass.
c. Porcelain enamel.
d. Glazed surfaces of ceramic tile.

B. Joint Priming: Prime joint substrates where recommended by joint-sealant manufacturer or as indicated by preconstruction joint-sealant-substrate tests or prior experience. Apply primer to comply with joint-sealant manufacturer's written instructions. Confine primers to areas of joint-sealant bond; do not allow spillage or migration onto adjoining surfaces.

C. Masking Tape: Use masking tape where required to prevent contact of sealant or primer with adjoining

surfaces that otherwise would be permanently stained or damaged by such contact or by cleaning methods required to remove sealant smears. Remove tape immediately after tooling without disturbing joint seal.

3.3 INSTALLATION OF JOINT SEALANTS

A. General: Comply with joint-sealant manufacturer's written installation instructions for products and applications indicated, unless more stringent requirements apply.

B. Sealant Installation Standard: Comply with recommendations in ASTM C 1193 for use of joint sealants as applicable to materials, applications, and conditions indicated.

C. Install sealant backings of kind indicated to support sealants during application and at position required to produce cross-sectional shapes and depths of installed sealants relative to joint widths that allow optimum sealant movement capability.
1. Do not leave gaps between ends of sealant backings.
2. Do not stretch, twist, puncture, or tear sealant backings.
3. Remove absorbent sealant backings that have become wet before sealant application and replace them with dry materials.

D. Install bond-breaker tape behind sealants where sealant backings are not used between sealants and backs of joints.

E. Install sealants using proven techniques that comply with the following and at the same time backings are installed:
1. Place sealants so they directly contact and fully wet joint substrates.
2. Completely fill recesses in each joint configuration.
3. Produce uniform, cross-sectional shapes and depths relative to joint widths that allow optimum sealant movement capability.

F. Tooling of Non-sag Sealants: Immediately after sealant application and before skinning or curing begins, tool sealants according to requirements specified in subparagraphs below to form smooth, uniform beads of configuration indicated; to eliminate air pockets; and to ensure contact and adhesion of sealant with sides of joint.
1. Remove excess sealant from surfaces adjacent to joints.
2. Use tooling agents that are approved in writing by sealant manufacturer and that do not discolor sealants or adjacent surfaces.
3. Provide concave joint profile per Figure 8A in ASTM C 1193, unless otherwise indicated.
4. Provide flush joint profile where indicated per Figure 8B in ASTM C 1193.
5. Provide recessed joint configuration of recess depth and at locations indicated per Figure 8C in ASTM C 1193.

3.4 FIELD QUALITY CONTROL

A. Evaluation of Field-Adhesion Test Results: Sealants not evidencing adhesive failure from testing or noncompliance with other indicated requirements will be considered satisfactory. Remove sealants that fail to adhere to joint substrates during testing or to comply with other requirements. Retest failed applications until test results prove sealants comply with indicated requirements.

3.5 CLEANING

A. Clean off excess sealant or sealant smears adjacent to joints as the Work progresses by methods and with cleaning materials approved in writing by manufacturers of joint sealants and of products in which joints occur.

3.6 PROTECTION

A. Protect joint sealants during and after curing period from contact with contaminating substances and from damage resulting from construction operations or other causes so sealants are without deterioration or damage at time of Substantial Completion. If, despite such protection, damage or deterioration occurs, cut out and remove damaged or deteriorated joint sealants immediately so installations with repaired areas are indistinguishable from original work.

3.7 JOINT-SEALANT SCHEDULE

A. Joint-Sealant Application: Exterior joints in vertical surfaces and horizontal non-traffic surfaces.
   1. Joint Locations:
      a. Construction joints in cast-in-place concrete.
      b. Control and expansion joints in unit masonry.
   2. Joint Sealant: Silicone
   3. Joint-Sealant Color: As selected by Landscape Architect from manufacturer's full range of colors

END OF SECTION 07920

SECTION 081113 - HOLLOW METAL DOORS AND FRAMES

PART 1 - GENERAL

1.1 RELATED DOCUMENTS

A. Drawings and general provisions of the Contract, including General and Supplementary Conditions and Division 01 Specification Sections, apply to this Section.

1.2 SUMMARY

A. Section includes:

1. Interior standard steel doors and frames.
2. Exterior standard steel doors and frames.

1.3 DEFINITIONS

A. Minimum Thickness: Minimum thickness of base metal without coatings according to NAAMM-HMMA 803 or SDI A250.8.

1.4 COORDINATION

A. Coordinate anchorage installation for hollow-metal frames. Furnish setting drawings, templates, and directions for installing anchorages, including sleeves, concrete inserts, anchor bolts, and items with integral anchors. Deliver such items to Project site in time for installation.

B. Coordinate requirements for installation of door hardware, electrified door hardware, and access control and security systems.

1.5 ACTION SUBMITTALS

A. Product Data: For each type of product.

1. Include construction details, material descriptions, core descriptions, fire-resistance ratings, temperature-rise ratings, and finishes.

B. Shop Drawings: Include the following:

1. Elevations of each door type.
2. Details of doors, including vertical- and horizontal-edge details and metal thicknesses.

3. Frame details for each frame type, including dimensioned profiles and metal thicknesses.
4. Locations of reinforcement and preparations for hardware.
5. Details of each different wall opening condition.
6. Details of electrical raceway and preparation for electrified hardware, access control systems, and security systems.
7. Details of anchorages, joints, field splices, and connections.
8. Details of accessories.
9. Details of moldings, removable stops, and glazing.

1.6 INFORMATIONAL SUBMITTALS

A. Product Test Reports: For each type of hollow-metal door and frame assembly, for tests performed by a qualified testing agency.

1.7 DELIVERY, STORAGE, AND HANDLING

A. Deliver hollow-metal doors and frames palletized, packaged, or crated to provide protection during transit and Project-site storage. Do not use nonvented plastic.

1. Provide additional protection to prevent damage to factory-finished units.

B. Deliver welded frames with two removable spreader bars across bottom of frames, tack welded to jambs and mullions.

C. Store hollow-metal doors and frames vertically under cover at Project site with head up. Place on minimum 4-inch- (102-mm-) high wood blocking. Provide minimum 1/4-inch (6-mm) space between each stacked door to permit air circulation.

PART 2 - PRODUCTS

2.1 MANUFACTURERS

A. Manufacturers: Subject to compliance with requirements, manufacturers offering standard steel doors and frames which may be incorporated in the work include the following:

1. Standard Steel Doors and Frames:
   . Amweld Building Products, Inc.
   b. Ceco Corp.
   c. Curries
   d. Republic Builders Products.
   e. Steelcraft Manufacturing Co.

2.2 PERFORMANCE REQUIREMENTS

A. Fire-Rated Assemblies: Complying with NFPA 80 and listed and labeled by a qualified testing agency acceptable to authorities having jurisdiction for fire-protection ratings indicated, based on testing at positive pressure according to NFPA 252 or UL 10C.

1. Smoke- and Draft-Control Assemblies: Provide assemblies with gaskets listed and labeled for smoke and draft control by a qualified testing agency acceptable to authorities having jurisdiction, based on testing according to UL 1784 and installed in compliance with NFPA 105.

B. Fire-Rated, Borrowed-Lite Assemblies: Complying with NFPA 80 and listed and labeled by a qualified testing agency acceptable to authorities having jurisdiction, for fire-protection ratings indicated, based on testing according to NFPA 257 or UL 9.

C. Thermally Rated Door Assemblies: Provide door assemblies with U-factor of not more than 0.50 deg Btu/F x h x sq. ft. (2.84 W/K x sq. m) when tested according to ASTM C 518.

2.3 INTERIOR STANDARD STEEL DOORS AND FRAMES

A. Construct hollow-metal doors and frames to comply with standards indicated for materials, fabrication, hardware locations, hardware reinforcement, tolerances, and clearances, and as specified.

B. Heavy-Duty Doors and Frames: SDI A250.8, Level 2; SDI A250.4, Level B.

1. Doors:

a. Type: As indicated in the Door and Frame Schedule.
b. Thickness: 1-3/4 inches (44.5 mm).
c. Face: Uncoated steel sheet, minimum thickness of 0.042 inch (1.0 mm).
d. Edge Construction: Model 1, Full Flush.
e. Edge Bevel: Provide manufacturer's standard beveled or square edges.
f. Core: Manufacturer's standard.
g. Fire-Rated Core: Manufacturer's standard core for fire-rated and temperature-rise-rated doors.

2. Frames:

a. Materials: Uncoated steel sheet, minimum thickness of 0.053 inch (1.3 mm).
b. Sidelite and Transom Frames: Fabricated from same thickness material as adjacent door frame.
c. Construction: Full profile welded.

3. Exposed Finish: Factory Primed.

2.4 EXTERIOR STANDARD STEEL DOORS AND FRAMES

A. Construct hollow-metal doors and frames to comply with standards indicated for materials, fabrication, hardware locations, hardware reinforcement, tolerances, and clearances, and as specified.

B. Extra-Heavy-Duty Doors: SDI A250.8, Level 3; SDI A250.4, Level A.

1. Doors:

a. Type: As indicated in the Door and Frame Schedule.
b. Thickness: 1-3/4 inches (44.5 mm).
c. Face: Metallic-coated steel sheet, minimum thickness of 0.053 inch (1.3 mm), with minimum A60 (ZF180) coating.
d. Edge Construction: Model 1, Full Flush.
e. Edge Bevel: Provide manufacturer's standard beveled or square edges.
f. Top Edge Closures: Close top edges of doors with flush closures of same material as face sheets. Seal joints against water penetration.
g. Bottom Edges: Close bottom edges of doors where required for attachment of weather stripping with end closures or channels of same material as face sheets. Provide weep-hole openings in bottoms of exterior doors to permit moisture to escape.
h. Core: Manufacturer's standard.
i. Fire-Rated Core: Manufacturer's standard core for fire-rated doors.

C. Maximum-Duty Frames: SDI A250.8, Level 4; SDI A250.4, Level A.

1. Frames:

a. Materials: Metallic-coated steel sheet, minimum thickness of 0.067 inch (1.7 mm), with minimum A60 (ZF180) coating.
b. Construction: Full profile welded.

2. Exposed Finish: Factory.

2.5 BORROWED LITES

A. Fabricate of uncoated steel sheet, minimum thickness of 0.042 inch (1.0 mm).

B. Construction: Full profile welded.

C. Fabricate in one piece except where handling and shipping limitations require multiple sections. Where frames are fabricated in sections due to shipping or handling limitations, provide alignment plates or angles at each joint, fabricated of metal of same or greater thickness as metal as frames.

D. Provide countersunk, flat- or oval-head exposed screws and bolts for exposed fasteners unless otherwise indicated.

2.6 HOLLOW-METAL PANELS

A. Provide hollow-metal panels of same materials, construction, and finish as adjacent door assemblies.

2.7 FRAME ANCHORS

A. Jamb Anchors:

1. Type: Anchors of minimum size and type required by applicable door and frame standard, and suitable for performance level indicated.
2. Quantity: Minimum of three anchors per jamb, with one additional anchor for frames with no floor anchor. Provide one additional anchor for each 24 inches (610 mm) of frame height above 7 feet (2.1 m).
3. Postinstalled Expansion Anchor: Minimum 3/8-inch- (9.5-mm-) diameter bolts with expansion shields or inserts, with manufacturer's standard pipe spacer.

B. Floor Anchors: Provide floor anchors for each jamb and mullion that extends to floor.

C. Material: ASTM A 879/A 879M, Commercial Steel (CS), 04Z (12G) coating designation; mill phosphatized.

1. For anchors built into exterior walls, steel sheet complying with ASTM A 1008/A 1008M or ASTM A 1011/A 1011M; hot-dip galvanized according to ASTM A 153/A 153M, Class B.

2.8 MATERIALS

A. Cold-Rolled Steel Sheet: ASTM A 1008/A 1008M, Commercial Steel (CS), Type B; suitable for exposed applications.

B. Hot-Rolled Steel Sheet: ASTM A 1011/A 1011M, Commercial Steel (CS), Type B; free of scale, pitting, or surface defects; pickled and oiled.

C. Metallic-Coated Steel Sheet: ASTM A 653/A 653M, Commercial Steel (CS), Type B.

D. Inserts, Bolts, and Fasteners: Hot-dip galvanized according to ASTM A 153/A 153M.

E. Power-Actuated Fasteners in Concrete: Fastener system of type suitable for application indicated, fabricated from corrosion-resistant materials, with clips or other accessory devices for attaching hollow-metal frames of type indicated.

F. Mineral-Fiber Insulation: ASTM C 665, Type I (blankets without membrane facing); consisting of fibers manufactured from slag or rock wool; with maximum flame-spread and smoke-developed indexes of 25 and 50, respectively; passing ASTM E 136 for combustion characteristics.

G. Glazing: Comply with requirements in Section 088000 "Glazing."

2.9 FABRICATION

A. Door Astragals: Provide overlapping astragal on one leaf of pairs of doors where required by NFPA 80 for fire-performance rating or where indicated. Extend minimum 3/4 inch (19 mm) beyond edge of door on which astragal is mounted or as required to comply with published listing of qualified testing agency.

B. Hollow-Metal Frames: Fabricate in one piece except where handling and shipping limitations require multiple sections. Where frames are fabricated in sections, provide alignment plates or angles at each joint, fabricated of metal of same or greater thickness as frames.

1. Sidelite and Transom Bar Frames: Provide closed tubular members with no visible face seams or joints, fabricated from same material as door frame. Fasten members at crossings and to jambs by welding.
2. Provide countersunk, flat- or oval-head exposed screws and bolts for exposed fasteners unless otherwise indicated.
3. Door Silencers: Except on weather-stripped frames, drill stops to receive door silencers as follows. Keep holes clear during construction.

    a. Single-Door Frames: Drill stop in strike jamb to receive three door silencers.
    b. Double-Door Frames: Drill stop in head jamb to receive two door silencers.

C. Hardware Preparation: Factory prepare hollow-metal doors and frames to receive templated mortised hardware, and electrical wiring; include cutouts, reinforcement, mortising, drilling, and tapping according to SDI A250.6, the Door Hardware Schedule, and templates.

1. Reinforce doors and frames to receive nontemplated, mortised, and surface-mounted door hardware.
2. Comply with BHMA A156.115 for preparing hollow-metal doors and frames for hardware.

D. Glazed Lites: Provide stops and moldings around glazed lites where indicated. Form corners of stops and moldings with mitered hairline joints.

1. Provide stops and moldings flush with face of door, and with beveled stops unless otherwise indicated.
2. Multiple Glazed Lites: Provide fixed and removable stops and moldings so that each glazed lite is capable of being removed independently.
3. Provide fixed frame moldings on outside of exterior and on secure side of interior doors and frames. Provide loose stops and moldings on inside of hollow-metal doors and frames.
4. Coordinate rabbet width between fixed and removable stops with glazing and installation types indicated.
5. Provide stops for installation with countersunk flat- or oval-head machine screws spaced uniformly not more than 9 inches (230 mm) o.c. and not more than 2 inches (51 mm) o.c. from each corner.

2.10 STEEL FINISHES

A. Prime Finish: Clean, pretreat, and apply manufacturer's standard primer.

1. Shop Primer: Manufacturer's standard, fast-curing, lead- and chromate-free primer complying with SDI A250.10; recommended by primer manufacturer for substrate; compatible with substrate and field-applied coatings despite prolonged exposure.

2.11 LOUVERS

A. Provide louvers for interior doors, where indicated, which comply with SDI 111, with blades or baffles formed of 0.020-inch- (0.5-mm-) thick, cold-rolled steel sheet set into 0.032-inch- (0.8-mm-) thick steel frame.

1. Sightproof Louver: Stationary louvers constructed with inverted-V or inverted-Y blades.

B. Form corners of moldings with hairline joints. Provide fixed frame moldings on outside of exterior and on secure side of interior doors and frames.

PART 3 - EXECUTION

3.1 PREPARATION

A. Remove welded-in shipping spreaders installed at factory. Restore exposed finish by grinding, filling, and dressing, as required to make repaired area smooth, flush, and invisible on exposed faces. Touch up factory-applied finishes where spreaders are removed.

B. Drill and tap doors and frames to receive nontemplated, mortised, and surface-mounted door hardware.

3.2 INSTALLATION

A. General: Install hollow-metal doors and frames plumb, rigid, properly aligned, and securely fastened in place. Comply with approved Shop Drawings and with manufacturer's written instructions.

B. Hollow-Metal Frames: Comply with SDI A250.11.

1. Set frames accurately in position; plumbed, aligned, and braced securely until permanent anchors are set. After wall construction is complete, remove temporary braces without damage to completed Work.

a. Where frames are fabricated in sections, field splice at approved locations by welding face joint continuously; grind, fill, dress, and make splice smooth, flush, and invisible on exposed faces. Touch-up finishes.
b. Install frames with removable stops located on secure side of opening.

2. Fire-Rated Openings: Install frames according to NFPA 80.
3. Floor Anchors: Secure with postinstalled expansion anchors.

a. Floor anchors may be set with power-actuated fasteners instead of postinstalled expansion anchors if so indicated and approved on Shop Drawings.

4. Masonry Walls: Coordinate installation of frames to allow for solidly filling space between frames and masonry with grout or mortar.
5. In-Place Concrete or Masonry Construction: Secure frames in place with postinstalled expansion anchors. Countersink anchors, and fill and make smooth, flush, and invisible on exposed faces.
6. Installation Tolerances: Adjust hollow-metal frames to the following tolerances:

a. Squareness: Plus or minus 1/16 inch (1.6 mm), measured at door rabbet on a line 90 degrees from jamb perpendicular to frame head.
b. Alignment: Plus or minus 1/16 inch (1.6 mm), measured at jambs on a horizontal line parallel to plane of wall.
c. Twist: Plus or minus 1/16 inch (1.6 mm), measured at opposite face corners of jambs on parallel lines, and perpendicular to plane of wall.
d. Plumbness: Plus or minus 1/16 inch (1.6 mm), measured at jambs at floor.

C. Hollow-Metal Doors: Fit and adjust hollow-metal doors accurately in frames, within clearances specified below.

1. Non-Fire-Rated Steel Doors: Comply with SDI A250.8.
2. Fire-Rated Doors: Install doors with clearances according to NFPA 80.
3. Smoke-Control Doors: Install doors according to NFPA 105.

D. Glazing: Comply with installation requirements in Section 088000 "Glazing" and with hollow-metal manufacturer's written instructions.

3.3 CLEANING AND TOUCHUP

A. Prime-Coat Touchup: Immediately after erection, sand smooth rusted or damaged areas of prime coat and apply touchup of compatible air-drying, rust-inhibitive primer.

B. Metallic-Coated Surface Touchup: Clean abraded areas and repair with galvanizing repair paint according to manufacturer's written instructions.

C. Touchup Painting: Cleaning and touchup painting of abraded areas of paint are specified in painting Sections.

END OF SECTION 081113

SECTION 081416 - FLUSH WOOD DOORS

PART 1 - GENERAL

1.1 RELATED DOCUMENTS

A. Drawings and general provisions of the Contract, including General and Supplementary Conditions and Division 01 Specification Sections, apply to this Section.

1.2 SUMMARY

A. Section Includes:

1. Solid-core doors and transom panels where noted with wood-veneer faces.
2. Factory finishing flush wood doors.
3. Factory fitting flush wood doors to frames and factory machining for hardware.

1.3 ACTION SUBMITTALS

A. Product Data: For each type of door. Include details of core and edge construction and trim for openings. Include factory-finishing specifications.

B. Shop Drawings: Indicate location, size, and hand of each door; elevation of each kind of door; construction details not covered in Product Data; and the following:

1. Dimensions and locations of blocking.
2. Dimensions and locations of mortises and holes for hardware.
3. Dimensions and locations of cutouts.
4. Undercuts.
5. Requirements for veneer matching.
6. Doors to be factory finished and finish requirements.
7. Fire-protection ratings for fire-rated doors.

C. Samples for Initial Selection: For factory-finished doors.

D. Samples for Verification:

1. Factory finishes applied to actual door face materials, approximately 8 by 10 inches (200 by 250 mm), for each material and finish. For each wood species and transparent finish, provide set of three Samples showing typical range of color and grain to be expected in finished Work.

1.4 INFORMATIONAL SUBMITTALS

A. Sample Warranty: For special warranty.

B. Quality Standard Compliance Certificates: AWI Quality Certification Program certificates.

1.5 DELIVERY, STORAGE, AND HANDLING

A. Comply with requirements of referenced standard and manufacturer's written instructions.

B. Package doors individually in cardboard cartons and wrap bundles of doors in plastic sheeting.

C. Mark each door on top and bottom rail with opening number used on Shop Drawings.

1.6 FIELD CONDITIONS

A. Environmental Limitations: Do not deliver or install doors until spaces are enclosed and weathertight, wet work in spaces is complete and dry, and HVAC system is operating and maintaining temperature between 60 and 90 deg F (16 and 32 deg C) and relative humidity between 43 and 70 percent during remainder of construction period.

1.7 WARRANTY

A. Special Warranty: Manufacturer agrees to repair or replace doors that fail in materials or workmanship within specified warranty period.

1. Failures include, but are not limited to, the following:

a. Warping (bow, cup, or twist) more than 1/4 inch (6.4 mm) in a 42-by-84-inch (1067-by-2134-mm) section.
b. Telegraphing of core construction in face veneers exceeding 0.01 inch in a 3-inch (0.25 mm in a 76.2-mm) span.

2. Warranty shall also include installation and finishing that may be required due to repair or replacement of defective doors.
3. Warranty Period for Solid-Core Interior Doors: Life of installation.

PART 2 - PRODUCTS

2.1 MANUFACTURERS

A. Manufacturers: Subject to compliance with requirements, provide products by one of the following:
1. Graham; an Assa Abloy Group company.
2. Marshfield Door Systems, Inc.
3. Oshkosh Architectural Door Company.
4. VT Industries Inc.

B. Source Limitations: Obtain flush wood doors from single manufacturer.

2.2 FLUSH WOOD DOORS, GENERAL

A. Quality Standard: In addition to requirements specified, comply with AWI's, AWMAC's, and WI's "Architectural Woodwork Standards."

1. Provide Labels indicating that doors comply with requirements of grades specified.

B. Fire-Rated Wood Doors: Doors complying with NFPA 80 that are listed and labeled by a qualified testing agency, for fire-protection ratings indicated, based on testing at positive pressure according to NFPA 252 or UL 10C.
1. Temperature-Rise Limit: Where indicated, provide doors that have a maximum transmitted temperature end point of not more than 450 deg F (250 deg C) above ambient after 30 minutes of standard fire-test exposure.
2. Cores: Provide core specified or mineral core as needed to provide fire-protection rating indicated.
3. Edge Construction: Provide edge construction with intumescent seals concealed by outer stile. Comply with specified requirements for exposed edges.
4. Pairs: Provide formed-steel edges and astragals with intumescent seals.
    a. Finish steel edges and astragals to match door hardware (locksets or exit devices).

C. Smoke- and Draft-Control Door Assemblies: Listed and labeled for smoke and draft control, based on testing according to UL 1784.

D. Particleboard-Core Doors:

1. Particleboard: ANSI A208.1, Grade LD-2.
2. Blocking: Provide wood blocking in particleboard-core doors as follows:

    a. 5-inch (125-mm) top-rail blocking, in doors indicated to have closers.
    b. 5-inch (125-mm) bottom-rail blocking, in exterior doors and doors indicated to have kick, mop, or armor plates.

3. Provide doors with structural-composite-lumber cores instead of particleboard cores for doors indicated to receive exit devices.

E. Structural-Composite-Lumber-Core Doors:

1. Structural Composite Lumber: WDMA I.S.10.

    a. Screw Withdrawal, Face: 700 lbf (3100 N).
    b. Screw Withdrawal, Edge: 400 lbf (1780 N).

F. Mineral-Core Doors:

1. Core: Noncombustible mineral product complying with requirements of referenced quality standard and testing and inspecting agency for fire-protection rating indicated.
2. Blocking: Provide composite blocking with improved screw-holding capability approved for use in doors of fire-protection ratings indicated as follows:

    a. 5-inch (125-mm) top-rail blocking.
    b. 5-inch (125-mm) bottom-rail blocking, in doors indicated to have protection plates.
    c. 5-inch (125-mm) midrail blocking, in doors indicated to have armor plates.
    d. 5-inch (125-mm) midrail blocking, in doors indicated to have exit devices.

3. Edge Construction: At hinge stiles, provide laminated-edge construction with improved screw-holding capability and split resistance. Comply with specified requirements for exposed edges.

2.3 VENEER-FACED DOORS FOR TRANSPARENT FINISH

A. Interior Solid-Core Doors:

1. Grade: Custom (Grade A faces).
2. Species: Maple
3. Cut: Rift cut.
4. Match between Veneer Leaves: Slip match.
5. Assembly of Veneer Leaves on Door Faces: Balance match.
6. Pair and Set Match: Provide for doors hung in same opening or separated only by mullions.
7. Transom Match: End match.
8. Exposed Vertical and Top Edges: Same species as faces - edge Type A
9. Core: Particleboard
10. Construction: Five or seven plies. Stiles and rails are bonded to core, then entire unit is abrasive planed before veneering. Faces are bonded to core using a hot press.

2.4 LIGHT FRAMES AND LOUVERS

A. Wood Beads for Light Openings in Wood Doors: Provide manufacturer's standard wood beads unless otherwise indicated.

1. Wood Species: Same species as door faces.
2. Profile: Manufacturer's standard shape.
3. At wood-core doors with 20-minute fire-protection ratings, provide wood beads and metal glazing clips approved for such use.

B. Wood-Veneered Beads for Light Openings in Fire-Rated Doors: Manufacturer's standard wood-veneered noncombustible beads matching veneer species of door faces and approved for use in doors of fire-protection rating indicated. Include concealed metal glazing clips where required for opening size and fire-protection rating indicated.

C. Metal Frames for Light Openings in Fire-Rated Doors: Manufacturer's standard frame formed of 0.048-inch- (1.2-mm-) thick, cold-rolled steel sheet; factory primed for paint finish; and approved for use in doors of fire-protection rating indicated.

2.5 FABRICATION

A. Factory fit "fire-rated doors" to suit frame-opening sizes indicated. Comply with clearance requirements of referenced quality standard for fitting unless otherwise indicated.

1. Comply with NFPA 80 requirements for fire-rated doors.

B. Factory machine doors for hardware that is not surface applied. Locate hardware to comply with DHI-WDHS-3. Comply with final hardware schedules, door frame Shop Drawings, BHMA-156.115-W, and hardware templates.

1. Coordinate with hardware mortises in metal frames to verify dimensions and alignment before factory machining.
2. Metal Astragals: Factory machine astragals and formed-steel edges for hardware for pairs of fire-rated doors.

C. Transom and Side Panels: Fabricate matching panels with same construction, exposed surfaces, and finish as specified for associated doors. Finish bottom edges of transoms and top edges of rabbeted doors same as door stiles.

1. Fabricate door and transom panels with full-width, solid-lumber, rabbeted, meeting rails. Provide factory-installed spring bolts for concealed attachment into jambs of metal door frames.

D. Openings: Factory cut and trim openings through doors.

1. Light Openings: Trim openings with moldings of material and profile indicated.
2. Glazing: Factory install glazing in doors indicated to be factory finished. Comply with applicable requirements in Section 088000 "Glazing."

2.6 FACTORY FINISHING

A. General: Comply with referenced quality standard for factory finishing. Complete fabrication, including fitting doors for openings and machining for hardware that is not surface applied, before finishing.

1. Finish faces, all four edges, edges of cutouts, and mortises. Stains and fillers may be omitted on bottom edges, edges of cutouts, and mortises.

B. Factory finish doors that are indicated to receive transparent finish.

C. Transparent Finish:

1. Grade: Custom.

2. Finish: WDMA TR-6 catalyzed polyurethane.
3. Staining: As selected by Architect from manufacturer's full range.
4. Sheen: Satin.

PART 3 - EXECUTION

3.1 EXAMINATION

A. Examine doors and installed door frames, with Installer present, before hanging doors.

1. Verify that installed frames comply with indicated requirements for type, size, location, and swing characteristics and have been installed with level heads and plumb jambs.
2. Reject doors with defects.

B. Proceed with installation only after unsatisfactory conditions have been corrected.

3.2 INSTALLATION

A. Hardware: For installation, see Section 087100 "Door Hardware."

B. Installation Instructions: Install doors to comply with manufacturer's written instructions and referenced quality standard, and as indicated.

1. Install fire-rated doors according to NFPA 80.
2. Install smoke- and draft-control doors according to NFPA 105.

C. Job-Fitted Doors: Align and fit doors in frames with uniform clearances and bevels as indicated below; do not trim stiles and rails in excess of limits set by manufacturer or permitted for fire-rated doors. Machine doors for hardware. Seal edges of doors, edges of cutouts, and mortises after fitting and machining.

1. Clearances: Provide 1/8 inch (3.2 mm) at heads, jambs, and between pairs of doors. Provide 1/8 inch (3.2 mm) from bottom of door to top of decorative floor finish or covering unless otherwise indicated. Where threshold is shown or scheduled, provide1/4 inch (6.4 mm) from bottom of door to top of threshold unless otherwise indicated.

    a. Comply with NFPA 80 for fire-rated doors.
    b. Bevel non-fire-rated doors 1/8 inch in 2 inches (3-1/2 degrees) at lock and hinge edges.

2. Bevel fire-rated doors 1/8 inch in 2 inches (3-1/2 degrees) at lock edge; trim stiles and rails only to extent permitted by labeling agency.

D. Factory-Fitted Doors: Align in frames for uniform clearance at each edge.

E. Factory-Finished Doors: Restore finish before installation if fitting or machining is required at Project site.

3.3 ADJUSTING

A. Operation: Rehang or replace doors that do not swing or operate freely.

B. Finished Doors: Replace doors that are damaged or that do not comply with requirements. Doors may be repaired or refinished if Work complies with requirements and shows no evidence of repair or refinishing.

END OF SECTION 081416

SECTION 083513 – FIREGUARD ACCORDION-FOLDING FIRE DOORS

PART 1 – GENERAL

1.01 SUMMARY OF WORK

A. Furnish and install all horizontal-sliding accordion-folding fire doors shown on the drawings and specified herein.

1.02 RELATED SECTIONS

A. All headers, support structures, fire protection of support structures, surrounding insulation, jambs, storage pockets, blocking and trim shall be furnished and installed by other sections.

B. All electrical wire, wiring, conduit and electrical boxes shall be furnished and installed by electrical section including connections to smoke detectors and building fire and access control alarm panels.

C. All track, soffit, chain guide and striker shall be painted by Section 09 90 00. Color shall be selected by the architect.

1.03 QUALITY ASSURANCE

A. Installation shall be performed by factory trained and certified installers with experience installing electrically operated accordion folding fire doors.

B. Fire doors shall be listed by Underwriters Laboratories for ratings as indicated, when tested in accordance with the requirements of UL 10B and NFPA 252.

C. Automatic closing system shall be listed by Underwriters Laboratories in accordance with the requirements of UL 864 and UL 294, and in compliance with NFPA 80.

D. Fire doors used for smoke and draft control shall bear the "S" mark on the fire door UL label and shall have an air leakage of less than 3 CFM/ft^2 at 0.1 inch of water column pressure when tested in accordance with UL 1784 with an artificial bottom seal.

E. Fire Doors shall be capable of resisting an air pressure differential up to 0.05 inches of water column.

1.04 SUBMITTALS

A. See Section 01 30 00 – Administrative Requirements, for submittal procedures.

B. Product Data: Provide manufacturer's technical literature, include UL listing data.

C. Shop Drawings: Indicate construction and installation details and dimensions, including layout, electrical requirements, required stack depth, height of header above finished floor, and requirements for anchorage and support of each door.

D. Operation and Maintenance Data: Operating procedures, troubleshooting and repair methods, and wiring diagrams.

1.05 DELIVERY, STORAGE, AND HANDLING

A. Manufacturer's agent will deliver original, unopened packages to a location designated by the General Contractor. All packages must be stored indoors, protected from moisture damage and secure from theft or other damage. General Contractor to note any damage or shortages at time of delivery.

1.06 COORDINATION BY GENERAL CONTRACTOR

A. Coordinate with the following:

1. Fire Alarm system.
2. Electrical.
3. Pocket cover doors.
4. Floor and ceiling finish.

B. Assure accurate installation of header, jamb, and trim. Provide "As-Built" dimensions for opening and storage pocket. Supervise unloading and handling of materials.

C. Store boxes flat (not more than three high) in a protected dry area.

D. Permanent power shall be in-place and ready for final connection when fire and access control doors are installed. Assure access to and proper clearance for motor operators.

E. After testing the fire alarm system, automatic-closing fire doors shall be re-set to the original position.

1.07 WARRANTY

A. Materials and installation shall be warranted against defects in workmanship for a period of two (5) years from the date of substantial completion.

PART 2 – PRODUCTS

2.01 MANUFACTURERS

A. Horizontal-sliding, accordion-folding, fire doors as manufactured by Won-Door Corporation shall be specified as the following:

1. Basis of Design: Won-Door FireGuard *60 minutes*
2. *Equivalent product by* Interior Tech

2.02 ACCORDION FIRE DOORS – GENERAL

A. Provide electrically powered self-closing fire doors of configurations indicated on the drawings.

1. Fire rating as required.

B. Fire Rating – Fire doors shall be listed by Underwriters Laboratory as special purpose fire doors having a *60* minute fire protection rating in accordance with the requirements of UL 10B and NFPA 252.

C. Single Parting and Bi-Parting: Door opening can be configured in a single parting (pocket at one end) or bi-parting (pocket at both ends) condition.

D. Closing and Opening Operation: Automatic Closing System, listed to UL864 including motor operator and releasing devices shall be a Microprocessor-based system and shall commence closing upon activation by fire signal, access control signal, low battery voltage or optional low AC voltage.

1. Obstruction Detection: Contact with an obstruction shall cause the door to stop, reverse enough to remove pressure on the leading edge, pause, and then re-close when in an alarm condition.
2. Constant pressure to the leading edge while not under motor power shall prevent motor operation and allow the door to be opened manually.

E. Exit Device Operation: Provide an exit device on one or both sides of door.

1. In emergency mode, a slight pressure on the exit device will cause the door to open a minimum of 32 inches, pause for 3 seconds, and then automatically close.
2. The open distance shall be field programmable, up to the entire opening width.
3. The pause before re-close shall be field programmable up to 30 seconds.
4. The exit device shall have the ability when not in the emergency (fire) mode to be used to open the door and move it back into the storage pocket.

2.03 COMPONENTS

A. Door Construction: Two parallel, accordion-type walls independently suspended with no floor tracks or pantographs.

1. Panels: 24-gauge steel, V-grooved; modular in design; capable of in-place repair.
2. Perimeter Seals: shall consist of continuous extruded sweeps attached to the top and bottom of the fire door to form a smoke and draft seal.
3. Hanging Weight: 5.5 pounds per sq. ft when extended across opening.
4. Finish: All steel panels shall have factory-applied protective coatings.
5. Color: Manufacturer's standard platinum.

B. Suspension System: Two tracks, on 8- or 10-inch centers, attached to overhead structural support.

1. Track: 14-gauge cold rolled steel or 1/8" Aluminum extrusion.
2. Panel Hangers: Panels shall be suspended by a steel hanger pin and ball bearing roller system.
3. Narrow Lead Post Hangers: 8-wheel ball bearing trolley.
4. Flat Lead Post Hangers: Double ball bearing rollers at each side with an 8-wheel ball bearing trolley.

C. Power source shall be: 120-volt AC input. System operation voltage shall be dual sourced from DC power supply and backup battery.

D. Automatic Closing System shall be listed to UL864 including capability to send and receive signals from the Fire Control Panel and shall consist of the following:

1. Microprocessor based Electronic Control box with the ability to:
   a. Monitor dual power sources continually for peak performance including:
      1) Detect a missing battery, bad battery, or low battery condition.
      2) Detect if the charging circuit is bad.

3) Detect fuse failures.

4) Detect high or low AC conditions.

b. Monitor the health of the drive train.

c. Monitor inputs including faults associated with door block, exit device, patron hardware, and key switches.

d. Run a "watch dog" monitoring circuit which will force a software restart in the event the software hangs, including tracking the number of resets that occur for diagnostic purposes.

e. Withstand aberrant voltages up to 120 volts AC on the fire alarm input circuit without damage including the ability to indicate that the alarm circuit has not been wired as a dry contact, "no voltage" circuit when errant voltages are applied to the circuit.

f. Communicate with other microprocessors on the system via an internal bus system.

g. Indicate faults or supervised information both locally and at a remote location.

2. Motor Operator Assembly including a DC gear-motor, drive sprocket, clutch, and position sensors. The motor shall drive the door by means of a chain. Standard motor drive speeds range from 6"-10" per second.

a. High speed motor operation up to 18" per second is available for conditions requiring high occupant load egress and limited access control.

b. Leading Edge shall be pressure sensitive such that contact with an obstruction shall cause the door to stop, pause for a minimum of 3 seconds, then re-close when in alarm mode.

3. Exit Device will be located on each side of the door. (Standard operation when access control is not included).

4. An optional key switch by others may be provided for operating the door opened and closed when not in fire mode. Location of the key switch to be provided by the architect.

E. The header shall be provided as an integrated part of the door assembly and shall Include track, threaded rods and mechanical attachment hardware.

2.05 OPTIONS

A. Vision Panel consisting of a frame and clear glass assembly listed by Underwriters Laboratory *(Note: Required on cross corridor applications in healthcare facilities)*.

B. Individual LCD Door Status Display Panel shall be provided adjacent to the door to indicate in the English language the status of the door, i.e., door position and trouble conditions. It shall have a port that allows easy access to a diagnostic tool for the purposes of field programming the door to customized settings.

C. Backlit Exit Device. High intensity LED illuminated exit device increases visibility and provides a more effective identification of exit location.

F. Reset Devices (required to clear the door from fault and alarm mode.) Options include:

1. Key Switch by others (Requires a 2 position, spring activation to neutral, normally open switch).
2. Key switch by Won-Door.
3. Wireless Key Switch by Won-Door using energy harvesting technology (no batteries required) for same room installation consisting of a key cylinder and wireless transmitter in an [ON/OFF/ON] configuration and wireless access module.
4. Wireless Reset Device by Won-Door using energy harvesting technology (no batteries required) for same room installation consisting of a wall mounted device that accepts any key card to activate a wireless transmitter that can be mounted directly to the wall. Requires Wireless Access Module to operate.

H. Air Pressure Resistance. When an air pressure differential is present at the door location, the standard door shall be capable of resisting an air pressure differential of 0.05" of water column. For air pressure differentials of 0.05" to 0.1" w.c., anti-sway brackets shall be placed interior to the door approximately every five (5) feet or less and lead post outriggers shall be provided. For air pressure differentials of 0.1" to 0.15" w.c., a reinforced vertical bar shall be provided at the lead post and a self-leveling lead post assembly shall provide motorized tracking of the leading edge of the door to assure proper closure at the striker.

I. Obstruction Test will enable all doors to be checked for obstructions every 24 hours. When enabled, the door will close across the opening to assure there has been no obstructions placed in the door path. If no obstruction is encountered, the door returns to the pocket location. If an obstruction does occur, the door will stop at the location of the obstruction and sound an alarm. Once the obstruction is removed, the alarm can be cleared and the door returned to the pocket location.

J. Infrared Obstruction Detector is an infrared light beam provided to monitor the opening path. If an object is placed in the path of the door for more than 3 minutes, the beam shall cause the door to sound an alarm indicating a path obstruction.

2.06 RELATED CONSTRUCTION

A. Track Support Construction: Provide supports attached to structure and mounting surface for track including drilling/placement of anchorage points into pre or post tensioned decks, welding/punching/drilling steel members, and all drywall work; comply with door manufacturer's instructions and recommendations.

B. Pocket Construction: Provide rated pocket as specified for storage of accordion door when open; comply with door manufacturer's instructions and recommendations.

C. Protection: Protect installed work from damage.

PART 3 – EXECUTION

3.01 EXAMINATION

A. Verify that adjacent construction is suitable for installation of door.

B. Verify that electrical utilities have been installed and are accessible.

C. Verify clear opening dimensions and that door opening is plumb.

D. Notify Architect of any unacceptable conditions or varying dimensions.

3.02 INSTALLATION

A. Install in accordance with manufacturer's instructions, shop drawings and NFPA 80.

B. Install fire doors plumb and parallel with the finished floor.

C. Installation shall be performed by factory trained and certified installers with experience installing electrically operated accordion folding fire doors.

3.03 ADJUSTING

A. Adjust door installation to provide uniform clearances and smooth, quiet, non-binding operation.

B. Test that all operations are functional and meet the requirements of local codes.

3.04 CLEANING

A. Clean surfaces using manufacturer's recommended means and methods.

END OF SECTION

SECTION 084113 - ALUMINUM-FRAMED ENTRANCES AND STOREFRONTS

PART 1 - GENERAL

1.1 RELATED DOCUMENTS

A. Drawings and general provisions of the Contract, including General and Supplementary Conditions and Division 01 Specification Sections, apply to this Section.

1.2 SUMMARY

A. Section Includes:

1. Storefront framing.
2. Manual-swing entrance doors.

1.3 ACTION SUBMITTALS

A. Product Data: For each type of product.

1. Include construction details, material descriptions, dimensions of individual components and profiles, and finishes.

B. Shop Drawings: For aluminum-framed entrances and storefronts. Include plans, elevations, sections, full-size details, and attachments to other work.

1. Include details of provisions for assembly expansion and contraction and for draining moisture occurring within the assembly to the exterior.
2. Include full-size isometric details of each type of vertical-to-horizontal intersection of aluminum-framed entrances and storefronts, showing the following:

a. Joinery, including concealed welds.
b. Anchorage.
c. Expansion provisions.
d. Glazing.
e. Flashing and drainage.

3. Show connection to and continuity with adjacent thermal, weather, air, and vapor barriers.
4. Include point-to-point wiring diagrams showing the following:

a. Power requirements for each electrically operated door hardware.
b. Location and types of switches, signal device, conduit sizes, and number and size of wires.

C. Samples for Initial Selection: For units with factory-applied color finishes.

D. Entrance Door Hardware Schedule: As specified in Section 087100

E. Delegated-Design Submittal: For aluminum-framed entrances and storefronts indicated to comply with performance requirements and design criteria, including analysis data signed and sealed by the qualified professional engineer responsible for their preparation.

1.4 INFORMATIONAL SUBMITTALS

A. Energy Performance Certificates: For aluminum-framed entrances and storefronts, accessories, and components, from manufacturer.

1. Basis for Certification: NFRC-certified energy performance values for each aluminum-framed entrance and storefront.

B. Product Test Reports: For aluminum-framed entrances and storefronts, for tests performed by a qualified testing agency.

C. Sample Warranties: For special warranties.

1.5 CLOSEOUT SUBMITTALS

A. Maintenance Data: For aluminum-framed entrances and storefronts to include in maintenance manuals.

1.6 QUALITY ASSURANCE

A. Installer Qualifications: An entity that employs installers and supervisors who are trained and approved by manufacturer.

B. Product Options: Information on Drawings and in Specifications establishes requirements for aesthetic effects and performance characteristics of assemblies. Aesthetic effects are indicated by dimensions, arrangements, alignment, and profiles of components and assemblies as they relate to sightlines, to one another, and to adjoining construction.

1. Do not change intended aesthetic effects, as judged solely by Architect, except with Architect's approval. If changes are proposed, submit comprehensive explanatory data to Architect for review.

1.7 MOCKUPS

A. Mockups: Build mockups to verify selections made under Sample submittals and to demonstrate aesthetic effects and set quality standards for fabrication and installation.

1. Build mockup of typical wall area as shown on Drawings or as noted in other specification sections.

2. Approval of mockups does not constitute approval of deviations from the Contract Documents contained in mockups unless Architect specifically approves such deviations in writing.

1.8 WARRANTY

A. Special Warranty: Manufacturer agrees to repair or replace components of aluminum-framed entrances and storefronts that do not comply with requirements or that fail in materials or workmanship within specified warranty period.

1. Failures include, but are not limited to, the following:

a. Structural failures, including, but not limited to, excessive deflection.
b. Noise or vibration created by wind and thermal and structural movements.
c. Deterioration of metals, metal finishes, and other materials beyond normal weathering.
d. Water penetration through fixed glazing and framing areas.
e. Failure of operating components.

2. Warranty Period: 5 years from date of Substantial Completion.

B. Special Finish Warranty: Standard form in which manufacturer agrees to repair finishes or replace aluminum that shows evidence of deterioration of factory-applied finishes within specified warranty period.

1. Deterioration includes, but is not limited to, the following:
a. Chalking in excess of a No. 8 rating when tested according to ASTM D 4214.
b. Cracking, checking, peeling, or failure of paint to adhere to bare metal.

2. Warranty Period: 10 years from date of Substantial Completion.

PART 2 - PRODUCTS

2.1 MANUFACTURERS

A. Source Limitations: Obtain all components of aluminum-framed entrance and storefront system, including framing spandrel panels and accessories, from single manufacturer.

2.2 PERFORMANCE REQUIREMENTS

A. Delegated Design: Engage a qualified professional engineer, as defined in Section 014000 "Quality Requirements," to design aluminum-framed entrances and storefronts.

B. General Performance: Comply with performance requirements specified, as determined by testing of aluminum-framed entrances and storefronts representing those indicated

for this Project without failure due to defective manufacture, fabrication, installation, or other defects in construction.

1. Aluminum-framed entrances and storefronts shall withstand movements of supporting structure, including, but not limited to, twist, column shortening, long-term creep, and deflection from uniformly distributed and concentrated live loads.
2. Failure also includes the following:

    a. Thermal stresses transferring to building structure.
    b. Glass breakage.
    c. Noise or vibration created by wind and thermal and structural movements.
    d. Loosening or weakening of fasteners, attachments, and other components.
    e. Failure of operating units.

C. Structural Loads:

1. Wind Loads: As indicated on Drawings.
2. Other Design Loads: As indicated on Drawings.

D. Deflection of Framing Members: At design wind pressure, as follows:

1. Deflection Normal to Wall Plane: Limited to edge of glass in a direction perpendicular to glass plane not exceeding 1/175 of the glass edge length for each individual glazing lite or an amount that restricts edge deflection of individual glazing lites to 3/4 inch (19.1 mm), whichever is less.
2. Deflection Parallel to Glazing Plane: Limited to 1/360 of clear span or 1/8 inch (3.2 mm), whichever is smaller.

    a. Operable Units: Provide a minimum 1/16-inch (1.6-mm) clearance between framing members and operable units.

E. Structural: Test according to ASTM E 330/E 330M as follows:

1. When tested at positive and negative wind-load design pressures, storefront assemblies, including entrance doors, do not evidence deflection exceeding specified limits.
2. When tested at 150 percent of positive and negative wind-load design pressures, storefront assemblies, including entrance doors and anchorage, do not evidence material failures, structural distress, or permanent deformation of main framing members exceeding 0.2 percent of span.
3. Test Durations: As required by design wind velocity, but not less than 10 seconds.

F. Air Infiltration: Test according to ASTM E 283 for infiltration as follows:

1. Fixed Framing and Glass Area:

    a. Maximum air leakage of 0.06 cfm/sq. ft. (0.30 L/s per sq. m) at a static-air-pressure differential of 1.57 lbf/sq. ft. (75 Pa).

2. Entrance Doors:

a. Single Doors: Maximum air leakage of 0.5 cfm/sq. ft. (2.54 L/s per sq. m) at a static-air-pressure differential of 1.57 lbf/sq. ft. (75 Pa).

G. Water Penetration under Static Pressure: Test according to ASTM E 331 as follows:

1. No evidence of water penetration through fixed glazing and framing areas, including entrance doors, when tested according to a minimum static-air-pressure differential of 20 percent of positive wind-load design pressure, but not less than 6.24 lbf/sq. ft. (300 Pa).
2. Maximum Water Leakage: According to AAMA 501.1. Water leakage does not include water controlled by flashing and gutters, or water that is drained to exterior.

H. Seismic Performance: Aluminum-framed entrances and storefronts shall withstand the effects of earthquake motions determined according to ASCE/SEI 7.

I. Energy Performance: Certify and label energy performance according to NFRC as follows:

1. Thermal Transmittance (U-factor): Fixed glazing and framing areas as a system shall have U-factor of not more than 0.69 Btu/sq. ft. x h x deg F (3.92 W/sq. m x K) as determined according to NFRC 100.

J. Thermal Movements: Allow for thermal movements resulting from ambient and surface temperature changes.

1. Temperature Change: 120 deg F (67 deg C), ambient; 180 deg F (100 deg C), material surfaces.

2. Designed to carry gravity loads of glazing.

2.3 STOREFRONT SYSTEMS

A. Manufacturers: Subject to compliance with requirements, provide products by one of the following:
1. Kawneer North America; an Alcoa company, Trifab VG 451
2. Oldcastle; FG-3000

B. Framing Members: Manufacturer's extruded- or formed-aluminum framing members of thickness required and reinforced as required to support imposed loads.

1. Exterior Framing Construction: Nonthermal.
2. Glazing System: Retained mechanically with gaskets on four sides.
3. Glazing Plane: Front.
4. Finish: Clear anodic finish.
5. Fabrication Method: Field-fabricated stick system.
6. Aluminum: Alloy and temper recommended by manufacturer for type of use and finish indicated.
7. Steel Reinforcement: As required by manufacturer.

C. Backer Plates: Manufacturer's standard, continuous backer plates for framing members, if not integral, where framing abuts adjacent construction.

D. Brackets and Reinforcements: Manufacturer's standard high-strength aluminum with nonstaining, nonferrous shims for aligning system components.

2.4 ENTRANCE DOOR SYSTEMS

A. Manufacturers: Subject to compliance with requirements, provide products by one of the following:
   1. Kawneer North America; an Alcoa company, 500 Heavy Wall and 500 Standard Entrances
   2. Or equal entranced door system by Oldcastle

B. "Standard" Interior Entrance Doors (RERFER TO DOOR SCHEDULE): Manufacturer's standard glazed entrance doors for manual-swing or automatic operation.

   1. Door Construction: 1-3/4-inch (44.5-mm) overall thickness, with minimum 0.125-inch- (3.2-mm-)] thick, extruded-aluminum tubular rail and stile members. Mechanically fasten corners with reinforcing brackets that are deeply penetrated and fillet welded or that incorporate concealed tie rods.

   2. Door Design: Wide stile; 5-inch (127-mm) nominal width.
   3. Glazing Stops and Gaskets: Square, snap-on, extruded-aluminum stops and preformed gaskets.

      a. Provide nonremovable glazing stops on outside of door.

C. "Heavy Walled" Exterior Entrance Doors (REFER TO DOOR SCHEDULE): Manufacturer's standard glazed entrance doors for manual-swing or automatic operation.

   1. Door Construction: 2-inch (50.8-mm) overall thickness, with minimum 0.188-inch-(4.8-mm-) thick, extruded-aluminum tubular rail and stile members. Mechanically fasten corners with reinforcing brackets that are deeply penetrated and fillet welded or that incorporate concealed tie rods.

   2. Door Design: Wide stile; 5-inch (127-mm) nominal width.
   3. Glazing Stops and Gaskets: Square, snap-on, extruded-aluminum stops and preformed gaskets.

      a. Provide nonremovable glazing stops on outside of door.

2.5 ENTRANCE DOOR HARDWARE

A. Entrance Door Hardware: Hardware not specified in this Section is specified in Section 087100 "Door Hardware."

B. Removable Mullions: BHMA A156.3 extruded aluminum.

1. When used with panic exit devices, provide keyed removable mullions listed and labeled by a testing and inspecting agency acceptable to authorities having jurisdiction, for panic protection, based on testing according to UL 305. Use only mullions that have been tested with exit devices to be used.

2.6 GLAZING

A. Glazing: Comply with Section 088000 "Glazing."

B. Glazing Gaskets: Manufacturer's standard sealed-corner pressure-glazing system of black, resilient elastomeric glazing gaskets, setting blocks, and shims or spacers.

C. Glazing Sealants: As recommended by manufacturer.

2.7 MATERIALS

A. Sheet and Plate: ASTM B 209 (ASTM B 209M).

B. Extruded Bars, Rods, Profiles, and Tubes: ASTM B 221 (ASTM B 221M).

C. Extruded Structural Pipe and Tubes: ASTM B 429/B 429M.

D. Structural Profiles: ASTM B 308/B 308M.

E. Steel Reinforcement:

1. Structural Shapes, Plates, and Bars: ASTM A 36/A 36M.
2. Cold-Rolled Sheet and Strip: ASTM A 1008/A 1008M.
3. Hot-Rolled Sheet and Strip: ASTM A 1011/A 1011M.
4. Primer: Manufacturer's standard zinc-rich, corrosion-resistant primer complying with SSPC-PS Guide No. 12.00; applied immediately after surface preparation and pretreatment. Select surface preparation methods according to recommendations in SSPC-SP COM, and prepare surfaces according to applicable SSPC standard.

2.8 ACCESSORIES

A. Fasteners and Accessories: Manufacturer's standard corrosion-resistant, nonstaining, nonbleeding fasteners and accessories compatible with adjacent materials.

1. Use self-locking devices where fasteners are subject to loosening or turning out from thermal and structural movements, wind loads, or vibration.
2. Reinforce members as required to receive fastener threads.
3. Use exposed fasteners with countersunk Phillips screw heads, fabricated from 300 series stainless steel.

B. Anchors: Three-way adjustable anchors with minimum adjustment of 1 inch (25.4 mm) that accommodate fabrication and installation tolerances in material and finish compatible with adjoining materials and recommended by manufacturer.

1. Concrete and Masonry Inserts: Hot-dip galvanized cast-iron, malleable-iron, or steel inserts complying with ASTM A 123/A 123M or ASTM A 153/A 153M requirements.

C. Concealed Flashing: Manufacturer's standard corrosion-resistant, nonstaining, nonbleeding flashing compatible with adjacent materials.

D. Bituminous Paint: Cold-applied asphalt-mastic paint containing no asbestos, formulated for 30-mil (0.762-mm) thickness per coat.

E. Rigid PVC Filler.

2.9 FABRICATION

A. Form or extrude aluminum shapes before finishing.

B. Fabricate components that, when assembled, have the following characteristics:

1. Profiles that are sharp, straight, and free of defects or deformations.
2. Accurately fitted joints with ends coped or mitered.
3. Physical and thermal isolation of glazing from framing members.
4. Accommodations for thermal and mechanical movements of glazing and framing to maintain required glazing edge clearances.
5. Provisions for field replacement of glazing from exterior.
6. Fasteners, anchors, and connection devices that are concealed from view to greatest extent possible.

C. Mechanically Glazed Framing Members: Fabricate for flush glazing without projecting stops.

D. Entrance Door Frames: Reinforce as required to support loads imposed by door operation and for installing entrance door hardware.

1. At interior and exterior doors, provide compression weather stripping at fixed stops.

E. Entrance Doors: Reinforce doors as required for installing entrance door hardware.

1. At pairs of exterior doors, provide sliding-type weather stripping retained in adjustable strip and mortised into door edge.
2. At exterior doors, provide weather sweeps applied to door bottoms.

F. Entrance Door Hardware Installation: Factory install entrance door hardware to the greatest extent possible. Cut, drill, and tap for factory-installed entrance door hardware before applying finishes.

G. After fabrication, clearly mark components to identify their locations in Project according to Shop Drawings.

2.10 ALUMINUM FINISHES

A. Clear Anodic Finish: AAMA 611, AA-M12C22A41, Class I, 0.018 mm or thicker.

PART 3 - EXECUTION

3.1 EXAMINATION

A. Examine areas, with Installer present, for compliance with requirements for installation tolerances and other conditions affecting performance of the Work.

B. Proceed with installation only after unsatisfactory conditions have been corrected.

3.2 INSTALLATION

A. General:

1. Comply with manufacturer's written instructions.
2. Do not install damaged components.
3. Fit joints to produce hairline joints free of burrs and distortion.
4. Rigidly secure nonmovement joints.
5. Install anchors with separators and isolators to prevent metal corrosion and electrolytic deterioration and to prevent impeding movement of moving joints.
6. Seal perimeter and other joints watertight unless otherwise indicated.

B. Metal Protection:

1. Where aluminum is in contact with dissimilar metals, protect against galvanic action by painting contact surfaces with materials recommended by manufacturer for this purpose or by installing nonconductive spacers.
2. Where aluminum is in contact with concrete or masonry, protect against corrosion by painting contact surfaces with bituminous paint.

C. Set continuous sill members and flashing in full sealant bed, as specified in Section 079200 "Joint Sealants," to produce weathertight installation.

D. Install components plumb and true in alignment with established lines and grades.

E. Install glazing as specified in Section 088000 "Glazing."

F. Entrance Doors: Install doors to produce smooth operation and tight fit at contact points.

1. Exterior Doors: Install to produce weathertight enclosure and tight fit at weather stripping.
2. Field-Installed Entrance Door Hardware: Install surface-mounted entrance door hardware according to entrance door hardware manufacturers' written instructions using concealed fasteners to greatest extent possible.

3.3 ERECTION TOLERANCES

A. Erection Tolerances: Install aluminum-framed entrances and storefronts to comply with the following maximum tolerances:

1. Plumb: 1/8 inch in 10 feet (3.2 mm in 3 m); 1/4 inch in 40 feet (6.35 mm in 12.2 m).
2. Level: 1/8 inch in 20 feet (3.2 mm in 6 m); 1/4 inch in 40 feet (6.35 mm in 12.2 m).
3. Alignment:

    a. Where surfaces abut in line or are separated by reveal or protruding element up to 1/2 inch (12.7 mm) wide, limit offset from true alignment to 1/16 inch (1.6 mm).
    b. Where surfaces are separated by reveal or protruding element from 1/2 to 1 inch (12.7 to 25.4 mm) wide, limit offset from true alignment to 1/8 inch (3.2 mm).
    c. Where surfaces are separated by reveal or protruding element of 1 inch (25.4 mm) wide or more, limit offset from true alignment to 1/4 inch (6 mm).

4. Location: Limit variation from plane to 1/8 inch in 12 feet (3.2 mm in 3.6 m); 1/2 inch (12.7 mm) over total length.

3.4 MAINTENANCE SERVICE

A. Entrance Door Hardware:

1. Maintenance Tools and Instructions: Furnish a complete set of specialized tools and maintenance instructions as needed for Owner's continued adjustment, maintenance, and removal and replacement of entrance door hardware.
2. Initial Maintenance Service: Beginning at Substantial Completion, provide 12 months' full maintenance by skilled employees of entrance door hardware Installer. Include quarterly preventive maintenance, repair or replacement of worn or defective components, lubrication, cleaning, and adjusting as required for proper entrance door hardware operation at rated speed and capacity. Use parts and supplies that are the same as those used in the manufacture and installation of original equipment.

END OF SECTION 084113

SECTION 084413 - GLAZED ALUMINUM CURTAIN WALLS

PART 1 - GENERAL

1.1 RELATED DOCUMENTS

A. Drawings and general provisions of the Contract, including General and Supplementary Conditions and Division 01 Specification Sections, apply to this Section.

B. Refer to Section 072100 for curtainwall insulation

1.2 SUMMARY

A. Section includes glazed aluminum curtain walls.

1.3 ACTION SUBMITTALS

A. Product Data: For each type of product.

1. Include construction details, material descriptions, dimensions of individual components and profiles, and finishes.

B. Shop Drawings: For glazed aluminum curtain walls. Include plans, elevations, sections, full-size details, and attachments to other work.

1. Include details of provisions for assembly expansion and contraction and for draining moisture occurring within the assembly to the exterior.
2. Include full-size isometric details of each vertical-to-horizontal intersection of glazed aluminum curtain walls, showing the following:

    a. Joinery, including concealed welds.
    b. Anchorage.
    c. Expansion provisions.
    d. Glazing.
    e. Flashing and drainage.

3. Show connection to and continuity with adjacent thermal, weather, air, and vapor barriers.

C. Samples for Initial Selection: For units with factory-applied color finishes.

D. Delegated-Design Submittal: For glazed aluminum curtain walls indicated to comply with performance requirements and design criteria, including analysis data signed and sealed by the qualified professional engineer responsible for their preparation.

1.4 INFORMATIONAL SUBMITTALS

A. Energy Performance Certificates: For glazed aluminum curtain walls, accessories, and components from manufacturer.

1. Basis for Certification: NFRC-certified energy performance values for each glazed aluminum curtain wall.

B. Product Test Reports: For glazed aluminum curtain walls, for tests performed by a qualified testing agency.

C. Sample Warranties: For special warranties.

1.5 CLOSEOUT SUBMITTALS

A. Maintenance Data: For glazed aluminum curtain walls to include in maintenance manuals.

1.6 QUALITY ASSURANCE

A. Installer Qualifications: An entity that employs installers and supervisors who are trained and approved by manufacturer.

B. Product Options: Information on Drawings and in Specifications establishes requirements for aesthetic effects and performance characteristics of assemblies. Aesthetic effects are indicated by dimensions, arrangements, alignment, and profiles of components and assemblies as they relate to sightlines, to one another, and to adjoining construction.

1. Do not change intended aesthetic effects, as judged solely by Architect, except with Architect's approval. If changes are proposed, submit comprehensive explanatory data to Architect for review.

1.7 WARRANTY

A. Special Assembly Warranty: Manufacturer agrees to repair or replace components of glazed aluminum curtain wall that do not comply with requirements or that fail in materials or workmanship within specified warranty period.

1. Failures include, but are not limited to, the following:

a. Structural failures including, but not limited to, excessive deflection.
b. Noise or vibration created by wind and thermal and structural movements.
c. Deterioration of metals, metal finishes, and other materials beyond normal weathering.
d. Water penetration through fixed glazing and framing areas.
e. Failure of operating components.

2. Warranty Period: Five years from date of Substantial Completion.

B. Special Finish Warranty: Standard form in which manufacturer agrees to repair finishes or replace aluminum that shows evidence of deterioration of factory-applied finishes within specified warranty period.

1. Deterioration includes, but is not limited to, the following:

a. Color fading more than 5 Hunter units when tested according to ASTM D 2244.
b. Chalking in excess of a No. 8 rating when tested according to ASTM D 4214.
c. Cracking, checking, peeling, or failure of paint to adhere to bare metal.

2. Warranty Period: 10 years from date of Substantial Completion.

PART 2 - PRODUCTS

2.1 PERFORMANCE REQUIREMENTS

A. Delegated Design: Engage a qualified professional engineer to design glazed aluminum curtain walls.

B. General Performance: Comply with performance requirements specified, as determined by testing of glazed aluminum curtain walls representing those indicated for this Project without failure due to defective manufacture, fabrication, installation, or other defects in construction.

1. Glazed aluminum curtain walls shall withstand movements of supporting structure including, but not limited to, story drift, twist, column shortening, long-term creep, and deflection from uniformly distributed and concentrated live loads.
2. Failure also includes the following:

a. Thermal stresses transferring to building structure.
b. Glass breakage.
c. Noise or vibration created by wind and thermal and structural movements.
d. Loosening or weakening of fasteners, attachments, and other components.
e. Failure of operating units.

C. Structural Loads:

1. Wind Loads: As indicated on Drawings.
2. Other Design Loads: As indicated on Drawings.

D. Deflection of Framing Members: At design wind pressure, as follows:

1. Deflection Normal to Wall Plane: Limited to edge of glass in a direction perpendicular to glass plane not exceeding 1/175 of the glass edge length for each individual glazing lite or an amount that restricts edge deflection of individual glazing lites to 3/4 inch (19.1 mm), whichever is less.

2. Deflection Parallel to Glazing Plane: Limited to 1/360 of clear span or 1/8 inch (3.2 mm), whichever is smaller.

E. Structural: Test according to ASTM E 330 as follows:

1. When tested at positive and negative wind-load design pressures, assemblies do not evidence deflection exceeding specified limits.
2. When tested at 150 percent of positive and negative wind-load design pressures, assemblies, including anchorage, do not evidence material failures, structural distress, or permanent deformation of main framing members exceeding 0.2 percent of span.
3. Test Durations: As required by design wind velocity, but not less than 10 seconds.

F. Air Infiltration: Test according to ASTM E 283 for infiltration as follows:

1. Fixed Framing and Glass Area:

a. Maximum air leakage of 0.06 cfm/sq. ft. (0.30 L/s per sq. m) at a static-air-pressure differential of 6.24 lbf/sq. ft. (300 Pa).

G. Water Penetration under Static Pressure: Test according to ASTM E 331 as follows:

1. No evidence of water penetration through fixed glazing and framing areas when tested according to a minimum static-air-pressure differential of 20 percent of positive wind-load design pressure, but not less than 6.24 lbf/sq. ft. (300 Pa).

H. Seismic Performance: Glazed aluminum curtain walls shall withstand the effects of earthquake motions determined according to ASCE/SEI 7.

I. Thermal Movements: Allow for thermal movements resulting from ambient and surface temperature changes:

1. Temperature Change: 120 deg F (67 deg C), ambient; 180 deg F (100 deg C), material surfaces.

2.2 MANUFACTURERS

A. Manufacturers: Subject to compliance with requirements, provide products by one of the following:
1. Exterior - Kawneer North America; an Alcoa company, 1600 Wall System 1 Curtain Wall accommodating 1-inch insulated glazing
2. Exterior - Oldcastle; Reliance system accommodating 1-inch insulated glazing

3. Interior Curtain wall - Kawneer North America; an Alcoa company, 1600 Wall System 1 Curtain Wall 2 1/2 x 5 1/4-inch system accommodating 1/4 inch insulated glazing
4. Interior Curtain wall - - Oldcastle; Reliance system - Curtain Wall 2 1/2 x 5 1/4-inch system accommodating 1/4-inch insulated glazing

B. Source Limitations: Obtain all components of curtain wall system, including framing, spandrel panels, entrances, and accessories, from single manufacturer.

2.3 FRAMING

A. Framing Members: Manufacturer's extruded- or formed-aluminum framing members of thickness required and reinforced as required to support imposed loads.

1. Construction: Non-Thermally broken.
2. Glazing System: Retained mechanically with gaskets on four sides.
3. Glazing Plane: Front.
4. Finish: Clear anodic finish.
5. Fabrication Method: Either factory- or field-fabricated system.
6. 5 1/4 inch, 6 inch and 7 ½ system depths as noted on the drawings.

B. Pressure Caps: Manufacturer's standard aluminum components that mechanically retain glazing.

1. Include snap-on aluminum trim that conceals fasteners.

C. Brackets and Reinforcements: Manufacturer's standard high-strength aluminum with nonstaining, nonferrous shims for aligning system components.

D. Materials:

1. Aluminum: Alloy and temper recommended by manufacturer for type of use and finish indicated.

a. Sheet and Plate: ASTM B 209 (ASTM B 209M).
b. Extruded Bars, Rods, Profiles, and Tubes: ASTM B 221 (ASTM B 221M).
c. Extruded Structural Pipe and Tubes: ASTM B 429/B 429M.
d. Structural Profiles: ASTM B 308/B 308M.

2. Steel Reinforcement: Manufacturer's standard zinc-rich, corrosion-resistant primer complying with SSPC-PS Guide No. 12.00; applied immediately after surface preparation and pretreatment. Select surface preparation methods according to recommendations in SSPC-SP COM, and prepare surfaces according to applicable SSPC standard.

a. Structural Shapes, Plates, and Bars: ASTM A 36/A 36M.
b. Cold-Rolled Sheet and Strip: ASTM A 1008/A 1008M.
c. Hot-Rolled Sheet and Strip: ASTM A 1011/A 1011M.

2.4 ENTRANCES

A. Entrances: Comply with Section 084113 "Aluminum-Framed Entrances and Storefronts."

2.5 GLAZING

A. Glazing: Comply with Section 088000 "Glazing."

B. Glazing Gaskets: Manufacturer's standard sealed-corner pressure-glazing system of black, resilient elastomeric glazing gaskets, setting blocks, and shims or spacers.

C. Glazing Sealants: As recommended by manufacturer.

2.6 ACCESSORIES

A. Fasteners and Accessories: Manufacturer's standard corrosion-resistant, nonstaining, nonbleeding fasteners and accessories compatible with adjacent materials.

1. Use self-locking devices where fasteners are subject to loosening or turning out from thermal and structural movements, wind loads, or vibration.
2. Reinforce members as required to receive fastener threads.
3. Use exposed fasteners with countersunk Phillips screw heads, fabricated from 300 series stainless steel.

B. Anchors: Three-way adjustable anchors with minimum adjustment of 1 inch (25.4 mm) that accommodate fabrication and installation tolerances in material and finish compatible with adjoining materials and recommended by manufacturer.

1. Concrete and Masonry Inserts: Hot-dip galvanized cast-iron, malleable-iron, or steel inserts complying with ASTM A 123/A 123M or ASTM A 153/A 153M requirements.

C. Concealed Flashing: Manufacturer's standard corrosion-resistant, nonstaining, nonbleeding flashing compatible with adjacent materials.

D. Bituminous Paint: Cold-applied asphalt-mastic paint complying with SSPC-Paint 12 requirements except containing no asbestos, formulated for 30-mil (0.762-mm) thickness per coat.

2.7 FABRICATION

A. Form or extrude aluminum shapes before finishing.

B. Fabricate components that, when assembled, have the following characteristics:

1. Profiles that are sharp, straight, and free of defects or deformations.
2. Accurately fitted joints with ends coped or mitered.
3. Physical and thermal isolation of glazing from framing members.
4. Accommodations for thermal and mechanical movements of glazing and framing to maintain required glazing edge clearances.
5. Provisions for field replacement of glazing from exterior.
6. Fasteners, anchors, and connection devices that are concealed from view to greatest extent possible.

C. Fabricate components to resist water penetration as follows:

1. Internal guttering system or other means to drain water passing joints, condensation occurring within framing members, and moisture migrating within glazed aluminum curtain wall to exterior.

D. Curtain-Wall Framing: Fabricate components for assembly using manufacturer's standard assembly method.

2.8 ALUMINUM FINISHES

A. Clear Anodic Finish: AAMA 611, AA-M12C22A41, Class I, 0.018 mm or thicker.

PART 3 - EXECUTION

3.1 EXAMINATION

A. Examine areas, with Installer present, for compliance with requirements for installation tolerances and other conditions affecting performance of the Work.

B. Proceed with installation only after unsatisfactory conditions have been corrected.

3.2 INSTALLATION

A. General:

1. Comply with manufacturer's written instructions.
2. Do not install damaged components.
3. Fit joints to produce hairline joints free of burrs and distortion.
4. Rigidly secure nonmovement joints.
5. Install anchors with separators and isolators to prevent metal corrosion and electrolytic deterioration and to prevent impeding movement of moving joints.
6. Where welding is required, weld components in concealed locations to minimize distortion or discoloration of finish. Protect glazing surfaces from welding.
7. Seal joints watertight unless otherwise indicated.

B. Metal Protection:

1. Where aluminum is in contact with dissimilar metals, protect against galvanic action by painting contact surfaces with primer, applying sealant or tape, or installing nonconductive spacers as recommended by manufacturer for this purpose.
2. Where aluminum is in contact concrete or masonry, protect against corrosion by painting contact surfaces with bituminous paint.

C. Install components to drain water passing joints, condensation occurring within framing members, and moisture migrating within glazed aluminum curtain wall to exterior.

D. Install components plumb and true in alignment with established lines and grades.

E. Install glazing as specified in Section 088000 "Glazing."

3.3 ERECTION TOLERANCES

A. Erection Tolerances: Install glazed aluminum curtain walls to comply with the following maximum tolerances:

1. Plumb: 1/8 inch in 10 feet (3.2 mm in 3 m); 1/4 inch in 40 feet (6.35 mm in 12.2 m).
2. Level: 1/8 inch in 20 feet (3.2 mm in 6 m); 1/4 inch in 40 feet (6.35 mm in 12.2 m).
3. Alignment:

    a. Where surfaces abut in line or are separated by reveal or protruding element up to 1/2 inch (12.7 mm) wide, limit offset from true alignment to 1/16 inch (1.6 mm).
    b. Where surfaces are separated by reveal or protruding element from 1/2 to 1 inch (12.7 to 25.4 mm) wide, limit offset from true alignment to 1/8 inch (3.2 mm).
    c. Where surfaces are separated by reveal or protruding element of 1 inch (25.4 mm) wide or more, limit offset from true alignment to 1/4 inch (6 mm).

4. Location: Limit variation from plane to 1/8 inch in 12 feet (3.2 mm in 3.6 m); 1/2 inch (12.7 mm) over total length.

END OF SECTION 084413

SECTION 087100 - DOOR HARDWARE

PART 1 - GENERAL

1.1 RELATED DOCUMENTS

A. Drawings and general provisions of the Contract, including General and Supplementary Conditions and Division 1 Specification Sections, apply to this Section.

1.2 SUMMARY

A. This Section includes commercial door hardware for the following:

1. Swinging doors.
2. Sliding doors.
3. Other doors to the extent indicated.

B. Door hardware includes, but is not necessarily limited to, the following:

1. Mechanical door hardware.
2. Electromechanical door hardware.
3. Cylinders specified for doors in other sections.

C. Related Sections:

1. Division 08 Section "Hollow Metal Doors and Frames".
2. Division 08 Section "Flush Wood Doors".
3. Division 08 Section "Aluminum-Framed Entrances and Storefronts".

D. Codes and References: Comply with the version year adopted by the Authority Having Jurisdiction.

1. ANSI A117.1 - Accessible and Usable Buildings and Facilities.
2. ICC/IBC - International Building Code.
3. NFPA 70 - National Electrical Code.
4. NFPA 80 - Fire Doors and Windows.
5. NFPA 101 - Life Safety Code.
6. NFPA 105 - Installation of Smoke Door Assemblies.
7. State Building Codes, Local Amendments.

E. Standards: All hardware specified herein shall comply with the following industry standards as applicable. Any undated reference to a standard shall be interpreted as referring to the latest edition of that standard:

1. ANSI/BHMA Certified Product Standards - A156 Series.
2. UL10C - Positive Pressure Fire Tests of Door Assemblies.
3. ANSI/UL 294 - Access Control System Units.
4. UL 305 - Panic Hardware.
5. ANSI/UL 437- Key Locks.

1.3 SUBMITTALS

A. Product Data: Manufacturer's product data sheets including installation details, material descriptions, dimensions of individual components and profiles, operational descriptions and finishes.

B. Door Hardware Schedule: Prepared by or under the supervision of supplier, detailing, fabrication and assembly of door hardware, as well as procedures and diagrams. Coordinate the final Door Hardware Schedule with doors, frames, and related work to ensure proper size, thickness, hand, function, and finish of door hardware.
   1. Format: Comply with scheduling sequence and vertical format in DHI's "Sequence and Format for the Hardware Schedule."
   2. Organization: Organize the Door Hardware Schedule into door hardware sets indicating complete designations of every item required for each door or opening. Organize door hardware sets in same order as in the Door Hardware Sets at the end of Part 3. Submittals that do not follow the same format and order as the Door Hardware Sets will be rejected and subject to resubmission.
   3. Content: Include the following information:
      a. Type, style, function, size, label, hand, and finish of each door hardware item.
      b. Manufacturer of each item.
      c. Fastenings and other pertinent information.
      d. Location of door hardware set, cross-referenced to Drawings, both on floor plans and in door and frame schedule.
      e. Explanation of abbreviations, symbols, and codes contained in schedule.
      f. Mounting locations for door hardware.
      g. Door and frame sizes and materials.
      h. Warranty information for each product.
   4. Submittal Sequence: Submit the final Door Hardware Schedule at earliest possible date, particularly where approval of the Door Hardware Schedule must precede fabrication of other work that is critical in the Project construction schedule. Include Product Data, Samples, Shop Drawings of other work affected by door hardware, and other information essential to the coordinated review of the Door Hardware Schedule.

C. Shop Drawings: Details of electrified access control hardware indicating the following:
   1. Wiring Diagrams: Upon receipt of approved schedules, submit detailed system wiring diagrams for power, signaling, monitoring, communication, and control of the access control system electrified hardware. Differentiate between manufacturer-installed and field-installed wiring. Include the following:
      a. Elevation diagram of each unique access controlled opening showing location and interconnection of major system components with respect to their placement in the respective door openings.
      b. Complete (risers, point-to-point) access control system block wiring diagrams.
      c. Wiring instructions for each electronic component scheduled herein.
   2. Electrical Coordination: Coordinate with related sections the voltages and wiring details required at electrically controlled and operated hardware openings.

D. Keying Schedule: After a keying meeting with the owner has taken place prepare a separate keying schedule detailing final instructions. Submit the keying schedule in electronic format. Include keying system explanation, door numbers, key set symbols,

hardware set numbers and special instructions. Owner must approve submitted keying schedule prior to the ordering of permanent cylinders/cores.

E. Informational Submittals:

1. Product Test Reports: Indicating compliance with cycle testing requirements, based on evaluation of comprehensive tests performed by manufacturer and witnessed by a qualified independent testing agency.

1.4 CLOSEOUT SUBMITTALS

A. Operating and Maintenance Manuals: Provide manufacturers operating and maintenance manuals for each item comprising the complete door hardware installation in quantity as required in Division 01, Closeout Procedures.

B. Project Record Documents: Provide record documentation of as-built door hardware sets in digital format (.pdf, .docx, .xlsx, .csv) and as required in Division 01, Project Record Documents.

1.5 QUALITY ASSURANCE

A. Hardware Supplier and Hardware Installer must obtain a license with the Louisiana Office of State Fire Marshall in accordance to RS 40:1464 and RS 40:1664.

B. Manufacturers Qualifications: Engage qualified manufacturers with a minimum 5 years of documented experience in producing hardware and equipment similar to that indicated for this Project and that have a proven record of successful in-service performance.

C. Certified Products: Where specified, products must maintain a current listing in the Builders Hardware Manufacturers Association (BHMA) Certified Products Directory (CPD).

D. Installer Qualifications: A minimum 3 years documented experience installing both standard and electrified door hardware similar in material, design, and extent to that indicated for this Project and whose work has resulted in construction with a record of successful in-service performance.

E. Door Hardware Supplier Qualifications: Experienced commercial door hardware distributors with a minimum 5 years documented experience supplying both mechanical and electromechanical hardware installations comparable in material, design, and extent to that indicated for this Project. Supplier recognized as a factory direct distributor by the manufacturers of the primary materials with a warehousing facility in Project's vicinity.

F. Source Limitations: Obtain each type and variety of door hardware specified in this section from a single source unless otherwise indicated.

1. Electrified modifications or enhancements made to a source manufacturer's product line by a secondary or third party source will not be accepted.

2. Provide electromechanical door hardware from the same manufacturer as mechanical door hardware, unless otherwise indicated.

G. Each unit to bear third party permanent label indicating compliance with the referenced testing standards.

H. Keying Conference: Conduct conference to comply with requirements in Division 01 Section "Project Meetings." Keying conference to incorporate the following criteria into the final keying schedule document:
1. Function of building, purpose of each area and degree of security required.
2. Plans for existing and future key system expansion.
3. Requirements for key control storage and software.
4. Installation of permanent keys, cylinder cores and software.
5. Address and requirements for delivery of keys.

I. Pre-Submittal Conference: Conduct coordination conference in compliance with requirements in Division 01 Section "Project Meetings" with attendance by representatives of Supplier(s), Installer(s), and Contractor(s) to review proper methods and the procedures for receiving, handling, and installing door hardware.
1. Prior to installation of door hardware, conduct a project specific training meeting to instruct the installing contractors' personnel on the proper installation and adjustment of their respective products. Product training to be attended by installers of door hardware (including electromechanical hardware) for aluminum, hollow metal and wood doors. Training will include the use of installation manuals, hardware schedules, templates and physical product samples as required.
2. Inspect and discuss electrical roughing-in, power supply connections, and other preparatory work performed by other trades.
3. Review sequence of operation narratives for each unique access controlled opening.
4. Review and finalize construction schedule and verify availability of materials.
5. Review the required inspecting, testing, commissioning, and demonstration procedures

J. At completion of installation, provide written documentation that components were applied according to manufacturer's instructions and recommendations and according to approved schedule.

1.6 DELIVERY, STORAGE AND HANDLING

A. Inventory door hardware on receipt and provide secure lock-up and shelving for door hardware delivered to Project site. Do not store electronic access control hardware, software or accessories at Project site without prior authorization.

B. Tag each item or package separately with identification related to the final Door Hardware Schedule, and include basic installation instructions with each item or package.

C. Deliver, as applicable, permanent keys, cylinders, cores, access control credentials, software and related accessories directly to Owner via registered mail or overnight package service. Instructions for delivery to the Owner shall be established at the "Keying Conference".

1.7 COORDINATION

A. Templates: Obtain and distribute to the parties involved templates for doors, frames, and other work specified to be factory prepared for installing standard and electrified hardware. Check Shop Drawings of other work to confirm that adequate provisions are made for locating and installing hardware to comply with indicated requirements.

B. Door and Frame Preparation: Doors and corresponding frames are to be prepared, reinforced and pre-wired (if applicable) to receive the installation of the specified electrified, monitoring, signaling and access control system hardware without additional in-field modifications.

1.8 WARRANTY

A. General Warranty: Reference Division 01, General Requirements. Special warranties specified in this Article shall not deprive Owner of other rights Owner may have under other provisions of the Contract Documents and shall be in addition to, and run concurrent with, other warranties made by Contractor under requirements of the Contract Documents.

B. Warranty Period: Written warranty, executed by manufacturer(s), agreeing to repair or replace components of standard and electrified door hardware that fails in materials or workmanship within specified warranty period after final acceptance by the Owner. Failures include, but are not limited to, the following:
   1. Structural failures including excessive deflection, cracking, or breakage.
   2. Faulty operation of the hardware.
   3. Deterioration of metals, metal finishes, and other materials beyond normal weathering.
   4. Electrical component defects and failures within the systems operation.

C. Warranty Period: Unless otherwise indicated, warranty shall be one year from date of Substantial Completion.

PART 2 - PRODUCTS

2.1 BUTT HINGES

A. Hinges: ANSI/BHMA A156.1 butt hinges with number of hinge knuckles and other options as specified in the Door Hardware Sets.
   1. Quantity: Provide the following hinge quantity:
      a. Two Hinges: For doors with heights up to 60 inches.
      b. Three Hinges: For doors with heights 61 to 90 inches.
      c. Four Hinges: For doors with heights 91 to 120 inches.
      d. For doors with heights more than 120 inches, provide 4 hinges, plus 1 hinge for every 30 inches of door height greater than 120 inches.
   2. Hinge Size: Provide the following, unless otherwise indicated, with hinge widths sized for door thickness and clearances required:
      a. Widths up to 3'0": 4-1/2" standard or heavy weight as specified.
      b. Sizes from 3'1" to 4'0": 5" standard or heavy weight as specified.

3. Hinge Weight and Base Material: Unless otherwise indicated, provide the following:
   a. Exterior Doors: Heavy weight, non-ferrous, ball bearing or oil impregnated bearing hinges unless Hardware Sets indicate standard weight.
   b. Interior Doors: Standard weight, steel, ball bearing or oil impregnated bearing hinges unless Hardware Sets indicate heavy weight.
4. Hinge Options: Comply with the following:
   a. Non-removable Pins: With the exception of electric through wire hinges, provide set screw in hinge barrel that, when tightened into a groove in hinge pin, prevents removal of pin while door is closed; for the all out-swinging lockable doors.
5. Manufacturers:
   a. Ives (IV) - 5BB Series, 5-knuckle.
   b. McKinney (MK) - TA/T4A Series, 5-knuckle.
   c. dormakaba BEST (ST) - F/FBB Series, 5-knuckle.

2.2 CONTINUOUS HINGES

A. Continuous Geared Hinges: ANSI/BHMA A156.26 Grade 1-600 continuous geared hinge. with minimum 0.120-inch thick extruded 6063-T6 aluminum alloy hinge leaves and a minimum overall width of 4 inches. Hinges are non-handed, reversible and fabricated to template screw locations. Factory trim hinges to suit door height and prepare for electrical cut-outs.
   1. Manufacturers:.
      a. Ives (IV).
      b. Pemko (PE).
      c. dormakaba BEST (ST).

2.3 POWER TRANSFER DEVICES

A. Electrified Quick Connect Continuous Geared Transfer Hinges: Provide electrified transfer continuous geared hinges with a removable service panel cutout accessible without de-mounting door from the frame. Furnish with Molex™ standardized plug connectors with sufficient number of concealed wires (up to 12) to accommodate the electrified functions specified in the Door Hardware Sets. Connectors plug directly to through-door wiring harnesses for connection to electric locking devices and power supplies. Wire nut connections are not acceptable.
   1. Manufacturers:
      a. Ives (IV) - Connect.
      b. Pemko (PE) - SER-QC (# wires) Option.

B. Electric Door Wire Harnesses: Provide electric/data transfer wiring harnesses with standardized plug connectors to accommodate up to twelve (12) wires. Connectors plug directly to through-door wiring harnesses for connection to electric locking devices and power supplies. Provide sufficient number and type of concealed wires to accommodate electric function of specified hardware. Provide a connector for through-door electronic locking devices and from hinge to junction box above the opening. Wire nut connections are not acceptable. Determine the length required for each electrified

hardware component for the door type, size and construction, minimum of two per electrified opening.

1. Provide one each of the following tools as part of the base bid contract:
   a. McKinney (MK) - Electrical Connecting Kit: QC-R001.
   b. McKinney (MK) - Connector Hand Tool: QC-R003.
2. Manufacturers:
   a. McKinney (MK) - QC-C Series.
   b. Schlage (SC) - Connect.
   c. Von Duprin (VD) - Connect.

2.4 FLOOR CLOSERS AND PIVOTS

A. Pivots: ANSI/BHMA A156.4, Grade 1; space intermediate pivots equally not less than 25 inches on center apart or not more than 35 inches on center for doors over 121 inches high. Pivot hinges to have oil impregnated bronze bearing in the top pivot and a radial roller and thrust bearing in the bottom pivot with the bottom pivot designed to carry the full weight of the door. Pivots to be UL listed for windstorm where applicable.
   1. Manufacturers:
      a. Architectural Builders Hardware (AH).
      b. Ives (IV).
      c. Norton Rixson (RF).

2.5 DOOR OPERATING TRIM

A. Flush Bolts and Surface Bolts: Provide products conforming to ANSI/BHMA A156.3 and A156.16, Grade 1.
   1. Flush bolts to be furnished with top rod of sufficient length to allow bolt retraction device location approximately six feet from the floor.
   2. Furnish dust proof strikes for bottom bolts.
   3. Surface bolts to be minimum 8" in length and U.L. listed for labeled fire doors and U.L. listed for windstorm components where applicable.
   4. Provide related accessories (mounting brackets, strikes, coordinators, etc.) as required for appropriate installation and operation.
   5. Manufacturers:
      a. Ives (IV).
      b. Rockwood (RO).
      c. Trimco (TC).

B. Coordinators: ANSI/BHMA A156.3 door coordinators consisting of active-leaf, hold-open lever and inactive-leaf release trigger. Model as indicated in hardware sets.
   1. Manufacturers:
      a. Ives (IV).
      b. Rockwood (RO).
      c. Trimco (TC).

C. Door Push Plates and Pulls: ANSI/BHMA A156.6 door pushes and pull units of type and design specified in the Hardware Sets. Coordinate and provide proper width and height as required where conflicting hardware dictates.

1. Push/Pull Plates: Minimum .050 inch thick, size as indicated in hardware sets, with beveled edges, secured with exposed screws unless otherwise indicated.
2. Door Pull and Push Bar Design: Size, shape, and material as indicated in the hardware sets. Minimum clearance of 2 1/2-inches from face of door unless otherwise indicated.
3. Offset Pull Design: Size, shape, and material as indicated in the hardware sets. Minimum clearance of 2 1/2-inches from face of door and offset of 90 degrees unless otherwise indicated.
4. Pulls, where applicable, shall be provided with a 10" clearance from the finished floor on the push side to accommodate wheelchair accessibility.
5. Fasteners: Provide manufacturer's designated fastener type as indicated in Hardware Sets. When through-bolt fasteners are in the same location as a push plate, countersink the fasteners flush with the door face allowing the push plate to sit flat against the door.
6. Manufacturers:
   a. Ives (IV).
   b. Rockwood (RO).
   c. Trimco (TC).

2.6 CYLINDERS AND KEYING

A. General: Cylinder manufacturer to have minimum (10) years experience designing secured master key systems and have on record a published security keying system policy.

1. Manufacturers:
   a. dormakaba BEST (BE).
   b. Match Existing, Field Verify.

B. Cylinder Types: Original manufacturer cylinders able to supply the following cylinder formats and types:

1. Threaded mortise cylinders with rings and cams to suit hardware application.
2. Rim cylinders with back plate, flat-type vertical or horizontal tailpiece, and raised trim ring.
3. Bored or cylindrical lock cylinders with tailpieces as required to suit locks.
4. Tubular deadlocks and other auxiliary locks.
5. Mortise and rim cylinder collars to be solid and recessed to allow the cylinder face to be flush and be free spinning with matching finishes.
6. Keyway: Match Facility Standard.

C. Large Format Interchangeable Cores: Provide removable cores (LFIC) as specified, core insert, removable by use of a special key, and for use with only the core manufacturer's cylinder and door hardware.

D. Keying System: Each type of lock and cylinders to be factory keyed.

1. Supplier shall conduct a "Keying Conference" to define and document keying system instructions and requirements.

2. Furnish factory cut, nickel-silver large bow permanently inscribed with a visual key control number as directed by Owner.
3. Existing System: Field verify and key cylinders to match Owner's existing system.

E. Key Quantity: Provide the following minimum number of keys:

1. Change Keys per Cylinder: Two (2)
2. Master Keys (per Master Key Level/Group): Five (5).
3. Construction Keys (where required): Ten (10).
4. Construction Control Keys (where required): Two (2).
5. Permanent Control Keys (where required): Two (2).

F. Construction Keying: Provide temporary keyed construction cores.

G. Key Registration List (Bitting List):

1. Provide keying transcript list to Owner's representative in the proper format for importing into key control software.
2. Provide transcript list in writing or electronic file as directed by the Owner.

2.7 KEY CONTROL

A. Key Control Cabinet: Provide a key control system including envelopes, labels, and tags with self-locking key clips, receipt forms, 3-way visible card index, temporary markers, permanent markers, and standard metal cabinet. Key control cabinet shall have expansion capacity of 150% of the number of locks required for the project.
1. Manufacturers:
   a. Lund Equipment (LU).
   b. MMF Industries (MM).
   c. Telkee (TK).

2.8 MORTISE LOCKS AND LATCHING DEVICES

A. Mortise Locksets, Grade 1 (Heavy Duty): Provide ANSI/BHMA A156.13, Series 1000, Operational Grade 1 Certified Products Directory (CPD) listed mortise locksets. Listed manufacturers shall meet all functions and features as specified herein.
1. Manufacturers:
   a. ASSA ABLOY ACCENTRA, formerly known as Yale (YA) - 8800FL Series.
   b. Corbin Russwin Hardware (RU) - ML2000 Series.
   c. dormakaba BEST (BE) - 45H Series.
   d. Sargent Manufacturing (SA) - 8200 Series.
   e. Schlage (SC) - L9000 Series.

2.9 DEADLOCKS AND LATCHES

A. Narrow Case Deadlocks and Deadlatches: ANSI/BHMA 156.13 Series 1000 Grade 1 narrow case deadlocks and deadlatches for swinging or sliding door applications. All functions shall be manufactured in a single sized case formed from 12 gauge minimum, corrosion resistant steel (option for fully stainless steel case and components). Provide minimum 2 7/8" throw laminated stainless steel bolt. Bottom rail deadlocks to have 3/8" diameter bolts.

1. Manufacturers:
   a. Adams Rite Manufacturing (AD) - MS1850S / MS1950 Series.
   b. Adams Rite Manufacturing (AD) - 4900 Series.

2.10 LOCK AND LATCH STRIKES

A. Strikes: Provide manufacturer's standard strike with strike box for each latch or lock bolt, with curved lip extended to protect frame, finished to match door hardware set, unless otherwise indicated, and as follows:
   1. Flat-Lip Strikes: For locks with three-piece antifriction latchbolts, as recommended by manufacturer.
   2. Extra-Long-Lip Strikes: For locks used on frames with applied wood casing trim.
   3. Aluminum-Frame Strike Box: Provide manufacturer's special strike box fabricated for aluminum framing.
   4. Double-lipped strikes: For locks at double acting doors. Furnish with retractable stop for rescue hardware applications.

B. Standards: Comply with the following:
   1. Strikes for Mortise Locks and Latches: BHMA A156.13.
   2. Strikes for Bored Locks and Latches: BHMA A156.2.
   3. Strikes for Auxiliary Deadlocks: BHMA A156.36.
   4. Dustproof Strikes: BHMA A156.16.

2.11 CONVENTIONAL EXIT DEVICES

A. General Requirements: All exit devices specified herein shall meet or exceed the following criteria:
   1. Exit devices shall have a five-year warranty.
   2. At doors not requiring a fire rating, provide devices complying with NFPA 101 and listed and labeled for "Panic Hardware" according to UL305. Provide proper fasteners as required by manufacturer including sex nuts and bolts at openings specified in the Hardware Sets.
   3. Where exit devices are required on fire rated doors, provide devices complying with NFPA 80 and with UL labeling indicating "Fire Exit Hardware". Provide devices with the proper fasteners for installation as tested and listed by UL. Consult manufacturer's catalog and template book for specific requirements.
   4. Except on fire rated doors, provide exit devices with hex key dogging device to hold the pushbar and latch in a retracted position. Provide optional keyed cylinder dogging on devices where specified in Hardware Sets.
   5. Devices must fit flat against the door face with no gap that permits unauthorized dogging of the push bar. The addition of filler strips is required in any case where the door light extends behind the device as in a full glass configuration.
   6. Lever Operating Trim: Where exit devices require lever trim, furnish manufacturer's heavy duty escutcheon trim with threaded studs for thru-bolts.
      a. Lock Trim Design: As indicated in Hardware Sets, provide finishes and designs to match that of the specified locksets.
      b. Where function of exit device requires a cylinder, provide a cylinder (Rim or Mortise) as specified in Hardware Sets.
   7. Vertical Rod Exit Devices: Where surface or concealed vertical rod exit devices are used at interior openings, provide as less bottom rod (LBR) unless otherwise

indicated. Provide dust proof strikes where thermal pins are required to project into the floor.

8. Narrow Stile Applications: At doors constructed with narrow stiles, or as specified in Hardware Sets, provide devices designed for maximum 2" wide stiles.
9. Dummy Push Bar: Nonfunctioning push bar matching functional push bar.
10. Rail Sizing: Provide exit device rails factory sized for proper door width application.
11. Through Bolt Installation: For exit devices and trim as indicated in Door Hardware Sets.

B. Conventional Push Rail Exit Devices (Heavy Duty): ANSI/BHMA A156.3, Grade 1 Certified Products Directory (CPD) listed exit devices. Listed manufacturers shall meet all functions and features as specified herein.

1. Electromechanical exit devices shall have the following functions and features:
   a. Universal Molex plug-in connectors that have standardized color-coded wiring and are field configurable in fail safe or fail secure and operate from 12vdc to 24vdc regulated.
   b. EcoFlex or equivalent technology that reduces energy consumption up to 92% as certified by GreenCircle.
   c. Options to be available for request-to-exit or enter signaling, latchbolt and touchbar monitoring.
   d. Field configurable electrified trim to fail-safe or fail-secure that operates from 12-24VDC.
   e. Five-year limited warranty for electromechanical features.
2. Manufacturers:
   a. ASSA ABLOY ACCENTRA, formerly known as Yale (YA) - 7000 Series.
   b. Corbin Russwin Hardware (RU) - ED4000 / ED5000 Series.
   c. Sargent Manufacturing (SA) - 80 Series.
   d. Von Duprin (VD) - 35A/98 XP Series.
   e. dormakaba Best (PR) - Apex 2000 Series.

2.12 DOOR CLOSERS

A. All door closers specified herein shall meet or exceed the following criteria:

1. General: Door closers to be from one manufacturer, matching in design and style, with the same type door preparations and templates regardless of application or spring size. Closers to be non-handed with full sized covers.
2. Standards: Closers to comply with UL-10C for Positive Pressure Fire Test and be U.L. listed for use of fire rated doors.
3. Size of Units: Comply with manufacturer's written recommendations for sizing of door closers depending on size of door, exposure to weather, and anticipated frequency of use. Where closers are indicated for doors required to be accessible to the Americans with Disabilities Act, provide units complying with ANSI ICC/A117.1.
4. Closer Arms: Provide heavy duty, forged steel closer arms unless otherwise indicated in Hardware Sets.
5. Closers shall not be installed on exterior or corridor side of doors; where possible install closers on door for optimum aesthetics.
6. Closer Accessories: Provide door closer accessories including custom templates, special mounting brackets, spacers and drop plates as required for proper

installation. Provide through-bolt and security type fasteners as specified in the hardware sets.

B. Door Closers, Surface Mounted (Heavy Duty): ANSI/BHMA A156.4, Grade 1 Certified Products Directory (CPD) listed surface mounted, heavy duty door closers with complete spring power adjustment, sizes 1 thru 6; and fully operational adjustable according to door size, frequency of use, and opening force. Closers to be rack and pinion type, one piece cast iron or aluminum alloy body construction, with adjustable backcheck and separate non-critical valves for closing sweep and latch speed control. Provide non-handed units standard.
   1. Heavy duty surface mounted door closers shall have a 30-year warranty.

   2. Manufacturers:

      a. ASSA ABLOY ACCENTRA, formerly known as Yale (YA) - 4400 Series.
      b. Corbin Russwin Hardware (RU) - DC6000 Series.
      c. dormakaba (DO) - 8900 Series.
      d. LCN Closers (LC) - 4040 Series.
      e. Sargent Manufacturing (SA) - 351 Series.

2.13 SURFACE MOUNTED CLOSER HOLDERS

A. Electromagnetic Door Holders: ANSI A156.15 electromagnetic door holder/releases with a minimum 20 to 40 pounds holding power and single coil construction able to accommodate.12VDC, 24VAC, 24VDC and 120VAC. Coils to be independently wound, employing an integral fuse and armatures to include a positive release button.
   1. Manufacturers:
      a. LCN Door Closers (LC) - SEM7800 Series.
      b. Norton Rixson (RF) - 980/990 Series.
      c. Sargent Manufacturing (SA) - 1560 Series.

2.14 ARCHITECTURAL TRIM

A. Door Protective Trim
   1. General: Door protective trim units to be of type and design as specified below or in the Hardware Sets.
   2. Size: Fabricate protection plates (kick, armor, or mop) not more than 2" less than door width (LDW) on stop side of single doors and 1" LDW on stop side of pairs of doors, and not more than 1" less than door width on pull side. Coordinate and provide proper width and height as required where conflicting hardware dictates. Height to be as specified in the Hardware Sets.
   3. Where plates are applied to fire rated doors with the top of the plate more than 16" above the bottom of the door, provide plates complying with NFPA 80. Consult manufacturer's catalog and template book for specific requirements for size and applications.
   4. Protection Plates: ANSI/BHMA A156.6 protection plates (kick, armor, or mop), fabricated from the following:
      a. Stainless Steel: 300 grade, 050-inch thick.

5. Options and fasteners: Provide manufacturer's designated fastener type as specified in the Hardware Sets. Provide countersunk screw holes.
6. Manufacturers:
   a. Ives (IV).
   b. Rockwood (RO).
   c. Trimco (TC).

2.15 DOOR STOPS AND HOLDERS

A. General: Door stops and holders to be of type and design as specified below or in the Hardware Sets.

B. Door Stops and Bumpers: ANSI/BHMA A156.16, Grade 1 door stops and wall bumpers. Provide wall bumpers, either convex or concave types with anchorage as indicated, unless floor or other types of door stops are specified in Hardware Sets. Do not mount floor stops where they will impede traffic. Where floor or wall bumpers are not appropriate, provide overhead type stops and holders.
   1. Manufacturers:
      a. Ives (IV).
      b. Rockwood (RO).
      c. Trimco (TC).

C. Overhead Door Stops and Holders: ANSI/BHMA A156.8, Grade 1 Certified Products Directory (CPD) listed overhead stops and holders to be surface or concealed types as indicated in Hardware Sets. Track, slide, arm and jamb bracket to be constructed of extruded bronze and shock absorber spring of heavy tempered steel. Provide non-handed design with mounting brackets as required for proper operation and function.
   1. Manufacturers:
      a. dormakaba (DO).
      b. Norton Rixson (RF).
      c. Rockwood (RO).
      d. Sargent Manufacturing (SA).

2.16 ARCHITECTURAL SEALS

A. General: Thresholds, weatherstripping, and gasket seals to be of type and design as specified below or in the Hardware Sets. Provide continuous weatherstrip gasketing on exterior doors and provide smoke, light, or sound gasketing on interior doors where indicated. At exterior applications provide non-corrosive fasteners and elsewhere where indicated.

B. Smoke Labeled Gasketing: Assemblies complying with NFPA 105 that are listed and labeled by a testing and inspecting agency acceptable to authorities having jurisdiction, for smoke control ratings indicated, based on testing according to UL 1784.
   1. Provide smoke labeled perimeter gasketing at all smoke labeled openings.

C. Fire Labeled Gasketing: Assemblies complying with NFPA 80 that are listed and labeled by a testing and inspecting agency acceptable to authorities having jurisdiction, for fire ratings indicated, based on testing according to UL-10C.

1. Provide intumescent seals as indicated to meet UL10C Standard for Positive Pressure Fire Tests of Door Assemblies, and NFPA 252, Standard Methods of Fire Tests of Door Assemblies.

D. Sound-Rated Gasketing: Assemblies that are listed and labeled by a testing and inspecting agency, for sound ratings indicated.

E. Replaceable Seal Strips: Provide only those units where resilient or flexible seal strips are easily replaceable and readily available from stocks maintained by manufacturer.

F. Manufacturers:

1. Pemko (PE).
2. Reese Enterprises, Inc. (RE).
3. Zero (ZE).

2.17 FABRICATION

A. Fasteners: Provide door hardware manufactured to comply with published templates generally prepared for machine, wood, and sheet metal screws. Provide screws according to manufacturers recognized installation standards for application intended.

2.18 FINISHES

A. Standard: Designations used in the Hardware Sets and elsewhere indicate hardware finishes complying with ANSI/BHMA A156.18, including coordination with traditional U.S. finishes indicated by certain manufacturers for their products.

B. Provide quality of finish, including thickness of plating or coating (if any), composition, hardness, and other qualities complying with manufacturer's standards, but in no case less than specified by referenced standards for the applicable units of hardware

C. Protect mechanical finishes on exposed surfaces from damage by applying a strippable, temporary protective covering before shipping.

PART 3 - EXECUTION

3.1 EXAMINATION

A. Examine scheduled openings, with Installer present, for compliance with requirements for installation tolerances, labeled fire door assembly construction, wall and floor construction, and other conditions affecting performance.

B. Notify architect of any discrepancies or conflicts between the door schedule, door types, drawings and scheduled hardware. Proceed only after such discrepancies or conflicts have been resolved in writing.

3.2 PREPARATION

A. Hollow Metal Doors and Frames: Comply with ANSI/DHI A115 series.

B. Wood Doors: Comply with ANSI/DHI A115-W series.

3.3 INSTALLATION

A. Install each item of mechanical and electromechanical hardware and access control equipment to comply with manufacturer's written instructions and according to specifications.
   1. Installers are to be trained and certified by the manufacturer on the proper installation and adjustment of fire, life safety, and security products including: hanging devices; locking devices; closing devices; and seals.

B. Mounting Heights: Mount door hardware units at heights indicated in following applicable publications, unless specifically indicated or required to comply with governing regulations:
   1. Standard Steel Doors and Frames: DHI's "Recommended Locations for Architectural Hardware for Standard Steel Doors and Frames."
   2. DHI TDH-007-20: Installation Guide for Doors and Hardware.
   3. Where indicated to comply with accessibility requirements, comply with ANSI A117.1 "Accessibility Guidelines for Buildings and Facilities."
   4. Provide blocking in drywall partitions where wall stops or other wall mounted hardware is located.

C. Retrofitting: Install door hardware to comply with manufacturer's published templates and written instructions. Where cutting and fitting are required to install door hardware onto or into surfaces that are later to be painted or finished in another way, coordinate removal, storage, and reinstallation of surface protective trim units with finishing work specified in Division 9 Sections. Do not install surface-mounted items until finishes have been completed on substrates involved.

D. Push Plates and Door Pulls: When through-bolt fasteners are in the same location as a push plate, countersink the fasteners flush with the door face allowing the push plate to sit flat against the door.

E. Thresholds: Set thresholds for exterior and acoustical doors in full bed of sealant complying with requirements specified in Division 7 Section "Joint Sealants."

F. Storage: Provide a secure lock up for hardware delivered to the project but not yet installed. Control the handling and installation of hardware items so that the completion of the work will not be delayed by hardware losses before and after installation.

3.4 FIELD QUALITY CONTROL

A. Field Inspection (Punch Report): Reference Division 01 Sections “Closeout Procedures”. Produce project punch report for each installed door opening indicating compliance with approved submittals and verification hardware is properly installed, operating and adjusted. Include list of items to be completed and corrected, indicating the reasons or deficiencies causing the Work to be incomplete or rejected.

1. Organization of List: Include separate Door Opening and Deficiencies and Corrective Action Lists organized by Mark, Opening Remarks and Comments, and related Opening Images and Video Recordings.

3.5 ADJUSTING

A. Initial Adjustment: Adjust and check each operating item of door hardware and each door to ensure proper operation or function of every unit. Replace units that cannot be adjusted to operate as intended. Adjust door control devices to compensate for final operation of heating and ventilating equipment and to comply with referenced accessibility requirements.

3.6 CLEANING AND PROTECTION

A. Protect all hardware stored on construction site in a covered and dry place. Protect exposed hardware installed on doors during the construction phase. Install any and all hardware at the latest possible time frame.

B. Clean adjacent surfaces soiled by door hardware installation.

C. Clean operating items as necessary to restore proper finish. Provide final protection and maintain conditions that ensure door hardware is without damage or deterioration at time of owner occupancy.

3.7 DEMONSTRATION

A. Instruct Owner's maintenance personnel to adjust, operate, and maintain mechanical and electromechanical door hardware.

3.8 DOOR HARDWARE SETS

A. The hardware sets represent the design intent and direction of the owner and architect. They are a guideline only and should not be considered a detailed hardware schedule. Discrepancies, conflicting hardware and missing items should be brought to the attention of the architect with corrections made prior to the bidding process. Omitted items not included in a hardware set should be scheduled with the appropriate additional hardware required for proper application and functionality.
   1. Quantities listed are for each pair of doors, or for each single door.
   2. The supplier is responsible for handing and sizing all products.
   3. Where multiple options for a piece of hardware are given in a single line item, the supplier shall provide the appropriate application for the opening.
   4. At existing openings with new hardware the supplier shall field inspect existing conditions prior to the submittal stage to verify the specified hardware will work as required. Provide alternate solutions and proposals as needed.

B. Manufacturer's Abbreviations:
1. MK - McKinney
2. PE - Pemko
3. NO - Norton Rixson
4. SU - Securitron
5. RO - Rockwood
6. YA - ASSA ABLOY ACCENTRA
7. AD - Adams Rite
8. BE - BEST Locks & Closers
9. RF - Rixson
10. OT - Other

Hardware Sets

Set: 1.0
Doors: 100-1, 100-2, 100A-1, 100D-1, 100G-1, 100G-2, 100H-1, 100i-1
Description: Exterior Pair Alum

2	Pivot Set	195	626	NO
4	Intermediate Pivot	M19	626	NO
1	Removable Mullion	KRM200 (F) x stabilizer	600	YA
1	Rim Exit Device, Nightlatch	7255 121NL	630	YA
1	Rim Exit Device, Exit Only	7255 EO	630	YA
4	Cylinder x temp core	Type as required	626	BE
4	Permanent Core	Match Existing	626	BE
2	Offset Door Pull	BF157	US32D	RO
2	Surface Closer	UNI4400 SNB Brk/spacer as req	689	YA
2	Drop Plate	488	689	YA
1	Rain Guard	346C		PE
2	Sweep w/ Drip	3452AV		PE
1	Lip Threshold	2005AT		PE
1	Perimeter Seal	By door mfgr		OT

Set: 2.0
Doors: 129-3
Description: Exterior Alum Exit

1	Pivot Set	195	626	NO
2	Intermediate Pivot	M19	626	NO
1	Rim Exit Device, Nightlatch	7255 121NL	630	YA
1	Cylinder x temp core	Type as required	626	BE
2	Permanent Core	Match Existing	626	BE
1	Offset Door Pull	BF157	US32D	RO
1	Surface Closer	UNI4400 SNB Brk/spacer as req	689	YA
1	Drop Plate	488	689	YA
1	Rain Guard	346C		PE
1	Sweep w/ Drip	3452AV		PE
1	Lip Threshold	2005AT		PE
1	Perimeter Seal	By door mfgr		OT

Set: 3.0
Doors: 102-1, 118-2
Description: Exterior HM Pair Exit

2	Continuous Hinge	CFM__HD1		PE
1	Removable Mullion	KRM200 (F) x stabilizer	600	YA
1	Rim Exit Device, Nightlatch	7155 632F	630	YA
1	Rim Exit Device, Exit Only	7155 EO	630	YA
4	Cylinder x temp core	Type as required	626	BE
4	Permanent Core	Match Existing	626	BE
2	Closer w/ Stop Arm	4420 SNB	689	YA
2	Kickplate	K1050 12" x 2" LDW 4BE CSK	US32D	RO
1	Rain Guard	346C		PE
1	Mullion Gasketing	5110BL		PE
2	Perimeter Seal	S773BL		PE
1	Perimeter Seal	2891APK		PE
2	Sweep w/ Drip	3452AV		PE
1	Lip Threshold	2005AT		PE

Set: 4.0
Doors: 107-1
Description: Exterior HM Lock

1	Continuous Hinge	CFM__HD1		PE
1	Classroom Lock	CRCN 8808FL LC	626	YA
1	Cylinder x temp core	Type as required	626	BE
1	Permanent Core	Match Existing	626	BE
1	Surface Closer	UNI4400 SNB Brk/spacer as req	689	YA
1	Kickplate	K1050 12" x 2" LDW 4BE CSK	US32D	RO
1	Rain Guard	346C		PE
1	Perimeter Seal	2891APK		PE
1	Sweep w/ Drip	3452AV		PE
1	Lip Threshold	2005AT		PE

Notes: Key on stair side.

Set: 5.0
Doors: 221-1, 223-3, 332-1, 332-2
Description: Exterior Alum Sgl Outswing DB x Pull

1	Pivot Set	195	626	NO
2	Intermediate Pivot	M19	626	NO
1	Deadlatch	4900	628	AD
1	Lever Operator	4600 (deadlatches) 02-Round	US32D	AD
1	Lever Trim	3080 02-Round 3	US32D	AD
1	Cylinder x temp core	Type as required	626	BE
1	Permanent Core	Match Existing	626	BE
1	Closer w/ Stop Arm	4420 SNB	689	YA
1	Drop Plate	488	689	YA
1	Rain Guard	346C		PE

1 Sweep w/ Drip	3452AV		PE
1 Lip Threshold	2005AT		PE
1 Perimeter Seal	By door mfgr		OT

Notes: Confirm hardware compatibility with aluminum door manufacturer.

Set: 6.0
Doors: 119-1, 119-2, 214-1, 214-2, 319-1, 319-2
Description: Pair- Auditorium/Corr/Class - Tall

8 Hinge, Full Mortise, Hvy Wt	T4A3786	US26D	MK
1 Removable Mullion	KRM200 (F) x stabilizer	600	YA
2 Rim Exit Device, Classroom	7105 CR626F	630	YA
5 Cylinder x temp core	Type as required	626	BE
5 Permanent Core	Match Existing	626	BE
2 Closer w/ Stop Arm	4420 SNB	689	YA
2 Kickplate	K1050 12" x 2" LDW 4BE CSK	US32D	RO
2 Silencer	608-RKW		RO

Notes: Modify kickplate height as required for bottom rail.

Set: 7.0
Doors: 215-1, 216-1, 320-1, 321-1
Description: AL Pair- Auditorium/Corr/Class 7'

2 Pivot Set	195	626	NO
2 Intermediate Pivot	M19	626	NO
1 Removable Mullion	KRM200 (F) x stabilizer	600	YA
2 Rim Exit Device, Classroom	7255 CR506F	630	YA
5 Cylinder x temp core	Type as required	626	BE
5 Permanent Core	Match Existing	626	BE
2 Closer w/ Stop Arm	4420 SNB	689	YA
2 Drop Plate	488	689	YA
1 Perimeter Seal	By door mfgr		OT

Set: 7.1
Doors: 100-3, 100-4, 100E-1, 100F-1, 100F-2
Description: Interior Pair Alum - Vestibule

2 Pivot Set	195	626	NO
4 Intermediate Pivot	M19	626	NO
1 Removable Mullion	KRM200 (F) x stabilizer	600	YA
1 Rim Exit Device, Nightlatch	7255 121NL	630	YA
1 Rim Exit Device, Exit Only	7255 EO	630	YA
4 Cylinder x temp core	Type as required	626	BE
4 Permanent Core	Match Existing	626	BE
2 Offset Door Pull	BF157	US32D	RO
2 Surface Closer	UNI4400 SNB Brk/spacer as req	689	YA
2 Drop Plate	488	689	YA
1 Perimeter Seal	By door mfgr		OT

Set: 8.0
Doors: 100A-2, 100B-1, 100D-2, 200A-1, 200C-1, 200F-1, 200H-1, 300B-1, 300C-1, 300F-1, 300H-1
Description: AL Pair- Corr - EMHO - Lockdown

2	Pivot Set	195	626	NO
2	Electrified Inter Pivot	EM19 QC*	626	NO
2	Intermediate Pivot	M19	626	NO
1	Removable Mullion	KRM200 (F) x stabilizer	600	YA
2	Electrified Rim Exit, Fail Safe	7100 B MELR CR690F	630	YA
3	Cylinder x temp core	Type as required	626	BE
3	Permanent Core	Match Existing	626	BE
2	Drop Plate	488	689	YA
2	Closer	4400 SNB	689	YA
2	Electromagnetic Holder	99x	689	RF
1	Perimeter Seal	By door mfgr		OT
2	Frame Wire Harness	QC-C1500P		MK
2	Door Wire Harness	QC-C*** (length / type as required)		MK
2	Position Switch	DPS-M/W-BK (as req'd per app)		SU
1	Power Supply	AQL Series with Power Distribution Board		SU

Notes: Doors are normally magnetically held open with latches retracted and must be tied in to fire control. In the event of fire alarm or loss of power, doors will release from magnets, latches release, free egress in and out. In the event of security system activation, doors will release from magnets, latches release and fail safe levers will energize - doors will allow free egress out only. WIDE STILE required.

Set: 9.0
Doors: 124-1, 124-2, 125-1, 125-2, 126-1, 126-2, 327-2
Description: AL Sgl Exit- Auditorium/Corr/Class - Tall

1	Pivot Set	195	626	NO
2	Intermediate Pivot	M19	626	NO
1	Rim Exit Device, Nightlatch	7155 121NL	630	YA
2	Cylinder x temp core	Type as required	626	BE
2	Permanent Core	Match Existing	626	BE
1	Offset Door Pull	RM3310-36	US32D	RO
1	Closer w/ Stop Arm	4420 SNB	689	YA
1	Drop Plate	488	689	YA
1	Perimeter Seal	By door mfgr		OT

Set: 10.0
Doors: 103-1, 120-1, 213-1, 233-1, 311-1, 325-1, 327-1
Description: Int Alum Pr Outswing DB x Pull - Tall

2	Pivot Set	195	626	NO
4	Intermediate Pivot	M19	626	NO
1	Dust Proof Strike	570	US26D	RO
2	Flush Bolt	555 - 12"/72" A.F.F.	US26D	RO
1	Lever	4550-01	130	AD
1	Strike	MS4002	628	AD

1	Mortise Deadlock	MS1850S	628	AD
1	Cylinder x temp core	Type as required	626	BE
1	Permanent Core	Match Existing	626	BE
4	Offset Door Pull	RM3310-36	US32D	RO
2	Closer w/ Stop Arm	4420 SNB	689	YA
2	Drop Plate	488	689	YA
1	Perimeter Seal	By door mfgr		OT

Notes: Confirm hardware compatibility with aluminum door manufacturer.

Set: 10.1
Doors: 219-1, 312-1
Description: Int Alum Sgl Outswing DB x Pull - Tall

1	Pivot Set	195	626	NO
2	Intermediate Pivot	M19	626	NO
1	Lever	4550-01	130	AD
1	Mortise Deadlock	MS1850S	628	AD
1	Cylinder x temp core	Type as required	626	BE
1	Permanent Core	Match Existing	626	BE
2	Offset Door Pull	RM3310-36	US32D	RO
1	Closer w/ Stop Arm	4420 SNB	689	YA
1	Drop Plate	488	689	YA
1	Perimeter Seal	By door mfgr		OT

Notes: Confirm hardware compatibility with aluminum door manufacturer.

Set: 11.0
Doors: 129-2
Description: Pair- Auditorium/Corr/Class

6	Hinge, Full Mortise, Hvy Wt	T4A3786	US26D	MK
1	Removable Mullion	KRM200 (F) x stabilizer	600	YA
2	Rim Exit Device, Classroom	7105 CR626F	630	YA
5	Cylinder x temp core	Type as required	626	BE
5	Permanent Core	Match Existing	626	BE
2	Closer w/ Stop Arm	4420 SNB	689	YA
2	Kickplate	K1050 12" x 2" LDW 4BE CSK	US32D	RO
1	Mullion Gasketing	5110BL		PE
1	Perimeter Seal	S773BL		PE

Set: 12.0
Doors: 118-1, 130-1, 211-1
Description: Pair- NL x DT

6	Hinge, Full Mortise, Hvy Wt	T4A3786	US26D	MK
1	Removable Mullion	KRM200 (F) x stabilizer	600	YA
1	Rim Exit Device, Nightlatch	7105 CR627F	630	YA
1	Rim Exit Device, Exit Only	7100 EO	630	YA
3	Cylinder x temp core	Type as required	626	BE

3	Permanent Core	Match Existing	626	BE
2	Closer w/ Stop Arm	4420 SNB	689	YA
2	Kickplate	K1050 12" x 2" LDW 4BE CSK	US32D	RO
1	Mullion Gasketing	5110BL		PE
1	Perimeter Seal	S773BL		PE

Set: 13.0
Doors: 201-1, 202-1, 202-2, 301-1, 302-1
Description: Sgl- Rated Stair- Lockdown - EMHO

2	Hinge, Full Mortise, Hvy Wt	T4A3786	US26D	MK
1	Hinge, Full Mortise, Hvy Wt	T4A3786 QC*	US26D	MK
1	Electrified Rim Exit, Fail Safe	7100F B MELR CR690F	630	YA
1	Closer	4400 SNB	689	YA
1	Kickplate	K1050 12" x 2" LDW 4BE CSK	US32D	RO
1	Electromagnetic Holder	99x	689	RF
1	Perimeter Seal	S773BL		PE
1	Frame Wire Harness	QC-C1500P		MK
1	Door Wire Harness	QC-C*** (length / type as required)		MK
1	Position Switch	DPS-M/W-BK (as req'd per app)		SU
1	Power Supply	AQL Series with Power Distribution Board		SU

Notes: Doors are normally magnetically held open with latches retracted and must be tied in to fire control. In the event of fire alarm or loss of power, doors will release from magnets, latches release, free egress in and out. In the event of security system activation, doors will release from magnets, latches release and fail safe levers will energize - doors will allow free egress out only.

Set: 14.0
Doors: 101-1
Description: Pair- Rated Stair- Passage

6	Hinge, Full Mortise, Hvy Wt	T4A3786	US26D	MK
1	Removable Mullion	KRM200 (F) x stabilizer	600	YA
2	Fire Rated Rim Exit, Passage	7100F CR628F	630	YA
2	Closer	4400 SNB	689	YA
2	Kickplate	K1050 12" x 2" LDW 4BE CSK	US32D	RO
2	Door Stop	480	US32D	RO
1	Mullion Gasketing	5110BL		PE
1	Perimeter Seal	S773BL		PE

Set: 15.0
Doors: 112-1, 212-1, 317-1
Description: Pair- Storage - Closer - Outswing - Gasket - AFB

6	Hinge, Full Mortise	TA2714	US26D	MK
1	Dust Proof Strike	570	US26D	RO
1	Automatic Flush Bolts	2842 /2942	US26D	RO
1	Storeroom or Closet Lock	CRCN 8805FL LC	626	YA
1	Cylinder x temp core	Type as required	626	BE
1	Permanent Core	Match Existing	626	BE

1	Coordinator	2672	US28	RO
2	Mounting Bracket	2601AB	US28	RO
2	Closer w/ Stop Arm	4420 SNB	689	YA
2	Kickplate	K1050 12" x 2" LDW 4BE CSK	US32D	RO
1	Astragal	355CS		PE
1	Perimeter Seal	S773BL		PE

Set: 15.1
Doors: 106-1
Description: Pair- Storage - OH Stop

6	Hinge, Full Mortise	TA2714	US26D	MK
1	Dust Proof Strike	570	US26D	RO
2	Flush Bolt	555 - 12"/72" A.F.F.	US26D	RO
1	Storeroom or Closet Lock	CRCN 8805FL LC	626	YA
1	Cylinder x temp core	Type as required	626	BE
1	Permanent Core	Match Existing	626	BE
2	Surf Overhead Stop	10-x36	689	RF
2	Silencer	608-RKW		RO

Set: 16.0
Doors: 104-1, 108-1, 210-1, 245-1, 246-1, 316-1, 317a-1, 324-1, 375-1
Description: Storeroom - Closer/stop - Gasket

3	Hinge, Full Mortise	TA2714	US26D	MK
1	Storeroom or Closet Lock	CRCN 8805FL LC	626	YA
1	Cylinder x temp core	Type as required	626	BE
1	Permanent Core	Match Existing	626	BE
1	Closer w/ Stop Arm	4420 SNB	689	YA
1	Kickplate	K1050 12" x 2" LDW 4BE CSK	US32D	RO
1	Perimeter Seal	S773BL		PE

Set: 16.1
Doors: 113-1
Description: Storeroom - Closer - Gasket

3	Hinge, Full Mortise	TA2714	US26D	MK
1	Storeroom or Closet Lock	CRCN 8805FL LC	626	YA
1	Cylinder x temp core	Type as required	626	BE
1	Permanent Core	Match Existing	626	BE
1	Closer	4400 SNB	689	YA
1	Kickplate	K1050 12" x 2" LDW 4BE CSK	US32D	RO
1	Door Stop	480	US32D	RO
1	Perimeter Seal	S773BL		PE

Set: 17.0
Doors: 130a-1, 222B-1
Description: Storage

3	Hinge, Full Mortise	TA2714	US26D	MK
1	Storeroom or Closet Lock	CRCN 8805FL LC	626	YA
1	Cylinder x temp core	Type as required	626	BE
1	Permanent Core	Match Existing	626	BE
1	Door Stop	480	US32D	RO
3	Silencer	608-RKW		RO

Set: 18.0
Doors: 115-1, 310-1
Description: Storage - OH Stop

3	Hinge, Full Mortise	TA2714	US26D	MK
1	Storeroom or Closet Lock	CRCN 8805FL LC	626	YA
1	Cylinder x temp core	Type as required	626	BE
1	Permanent Core	Match Existing	626	BE
1	Surf Overhead Stop	10-x36	689	RF
3	Silencer	608-RKW		RO

Set: 19.0
Doors: 223-1, 223A-2, 224-1, 225-1, 226-1, 227-1, 228-1, 229-1, 230-1, 234-1, 235-1, 236-1, 237-1, 238-1, 239-1, 240-1, 241-1, 242-1, 243-1, 307-1, 308-1, 309-1, 313-1, 326-1, 326-2, 329-1, 337-1, 338-1, 339-1, 340-1, 341-1, 342-1, 343-1, 344-1, 345-1, 346-1, 347-1, 348-1, 349-1, 350-1, 351-1, 352-1, 353-1, 354-1, 355-1, 356-1, 357-1, 358-1, 359-1, 360-1, 361-1, 362-1, 363-1, 364-1, 366-1, 367-1, 368-1, 369-1, 370-1, 371-1, 373-1, 374-1
Description: Office

3	Hinge, Full Mortise	TA2714	US26D	MK
1	Entry Lock	CRCN 8807FL LC	626	YA
1	Cylinder x temp core	Type as required	626	BE
1	Permanent Core	Match Existing	626	BE
1	Door Stop	480	US32D	RO
3	Silencer	608-RKW		RO

Notes: At aluminum frames, gasketing is by frame manufacturer.

Set: 20.0
Doors: 222-1, 223-2
Description: Pair- Office - Closer - Inswing - Gasket - AFB

6	Hinge, Full Mortise	TA2714	US26D	MK
1	Dust Proof Strike	570	US26D	RO
1	Automatic Flush Bolts	2842 /2942	US26D	RO
1	Entry Lock	CRCN 8807FL LC	626	YA
1	Cylinder x temp core	Type as required	626	BE
1	Permanent Core	Match Existing	626	BE
1	Coordinator	2672	US28	RO

2	Mounting Bracket	2601AB	US28	RO
2	Closer	4400 SNB	689	YA
2	Kickplate	K1050 12" x 2" LDW 4BE CSK	US32D	RO
2	Door Stop	480	US32D	RO
2	Silencer	608-RKW		RO

Notes: Modify kickplate height as required for bottom rail.

Set: 21.0
Doors: 223A-1
Description: Pair- Office - Closer - Outswing - AFB

6	Hinge, Full Mortise	TA2714	US26D	MK
1	Dust Proof Strike	570	US26D	RO
1	Automatic Flush Bolts	2842 /2942	US26D	RO
1	Entry Lock	CRCN 8807FL LC	626	YA
1	Cylinder x temp core	Type as required	626	BE
1	Permanent Core	Match Existing	626	BE
1	Coordinator	2672	US28	RO
2	Mounting Bracket	2601AB	US28	RO
2	Closer w/ Stop Arm	4420 SNB	689	YA
2	Kickplate	K1050 12" x 2" LDW 4BE CSK	US32D	RO
2	Silencer	608-RKW		RO

Set: 22.0
Doors: 303-1
Description: Pair- Office - Closer - Outswing - AFB - Tall

8	Hinge, Full Mortise	TA2714	US26D	MK
1	Dust Proof Strike	570	US26D	RO
1	Automatic Flush Bolts	2842 /2942	US26D	RO
1	Entry Lock	CRCN 8807FL LC	626	YA
1	Cylinder x temp core	Type as required	626	BE
1	Permanent Core	Match Existing	626	BE
1	Coordinator	2672	US28	RO
2	Mounting Bracket	2601AB	US28	RO
2	Closer w/ Stop Arm	4420 SNB	689	YA
2	Kickplate	K1050 12" x 2" LDW 4BE CSK	US32D	RO
2	Silencer	608-RKW		RO

Set: 23.0
Doors: 105-1, 121-1, 122-1, 123-1
Description: Corr - Inswing - Alum

1	Pivot Set	195	626	NO
1	Intermediate Pivot	M19	626	NO
1	Deadlatch	4900	628	AD
1	Lever Operator	4600 (deadlatches) 02-Round	US32D	AD
1	Lever Trim	3080 02-Round 3	US32D	AD
1	Cylinder x temp core	Type as required	626	BE

1	Permanent Core	Match Existing	626	BE
1	Drop Plate	488	689	YA
1	Closer	4400 SNB	689	YA
1	Door Stop	480	US26D	RO
1	Perimeter Seal	By door mfgr		OT

Set: 24.0
Doors: 318-1
Description: Corr - Inswing - Alum - Tall

1	Pivot Set	195	626	NO
2	Intermediate Pivot	M19	626	NO
1	Deadlatch	4900	628	AD
1	Lever Operator	4600 (deadlatches) 02-Round	US32D	AD
1	Lever Trim	3080 02-Round 3	US32D	AD
1	Cylinder x temp core	Type as required	626	BE
1	Permanent Core	Match Existing	626	BE
1	Drop Plate	488	689	YA
1	Closer	4400 SNB	689	YA
1	Door Stop	480	US26D	RO
1	Perimeter Seal	By door mfgr		OT

Set: 25.0
Doors: 114-1
Description: Corr - Outswing - Alum - Tall

1	Pivot Set	195	626	NO
2	Intermediate Pivot	M19	626	NO
1	Deadlatch	4900	628	AD
1	Lever Operator	4600 (deadlatches) 02-Round	US32D	AD
1	Lever Trim	3080 02-Round 3	US32D	AD
1	Cylinder x temp core	Type as required	626	BE
1	Permanent Core	Match Existing	626	BE
1	Closer w/ Stop Arm	4420 SNB	689	YA
1	Drop Plate	488	689	YA
1	Door Stop	480	US26D	RO
1	Perimeter Seal	By door mfgr		OT

Set: 26.0
Doors: 204-1
Description: Lab/Classroom - Outswing

3	Hinge, Full Mortise	TA2714	US26D	MK
1	Classroom Security Intruder Lock	CRCN 8818-2FL LC	626	YA
2	Cylinder x temp core	Type as required	626	BE
2	Permanent Core	Match Existing	626	BE
1	Closer w/ Stop Arm	4420 SNB	689	YA
1	Kickplate	K1050 12" x 2" LDW 4BE CSK	US32D	RO
3	Silencer	608-RKW		RO

Notes: 3 hinges @ 7' doors.

Set: 27.0
Doors: 203-1, 205-1, 206-1, 207-1, 304-1, 305-1
Description: Pair- Lab/Classroom - Closer - Outswing - Gasket - AFB - Tall

8	Hinge, Full Mortise	TA2714	US26D	MK
1	Dust Proof Strike	570	US26D	RO
1	Automatic Flush Bolts	2842 /2942	US26D	RO
1	Classroom Security Intruder Lock	CRCN 8818-2FL LC	626	YA
2	Cylinder x temp core	Type as required	626	BE
2	Permanent Core	Match Existing	626	BE
1	Coordinator	2672	US28	RO
2	Mounting Bracket	2601AB	US28	RO
2	Closer w/ Stop Arm	4420 SNB	689	YA
2	Kickplate	K1050 12" x 2" LDW 4BE CSK	US32D	RO
2	Silencer	608-RKW		RO

Set: 28.0
Doors: 328-1
Description: Classroom Function - Closer/stop - gasket

3	Hinge, Full Mortise	TA2714	US26D	MK
1	Classroom Lock	CRCN 8808FL LC	626	YA
1	Cylinder x temp core	Type as required	626	BE
1	Permanent Core	Match Existing	626	BE
1	Closer w/ Stop Arm	4420 SNB	689	YA
1	Kickplate	K1050 12" x 2" LDW 4BE CSK	US32D	RO
1	Perimeter Seal	S773BL		PE

Notes: Modify kickplate height as required for bottom rail.

Set: 29.0
Doors: 220-2, 231-2, 232-1, 233-2, 233-3, 302-2, 312-2, 325-2, 327-3, 328-2, 336-1
Description: Classroom Function - Closer - gasket

3	Hinge, Full Mortise	TA2714	US26D	MK
1	Classroom Lock	CRCN 8808FL LC	626	YA
1	Cylinder x temp core	Type as required	626	BE
1	Permanent Core	Match Existing	626	BE
1	Closer	4400 SNB	689	YA
1	Kickplate	K1050 12" x 2" LDW 4BE CSK	US32D	RO
1	Door Stop	480	US32D	RO
1	Perimeter Seal	S773BL		PE

Notes: Modify kickplate height as required for bottom rail.

Set: 30.0
Doors: 116-1, 117-1, 127-1, 128-1, 208-1, 209-1, 217-1, 218-1, 314-1, 315-1, 322-1, 323-1
Description: Shared Restroom

3	Hinge, Full Mortise, Hvy Wt	T4A3786	US26D	MK
1	Mortise Deadlock	356 LC	626	YA
2	Cylinder x temp core	Type as required	626	BE
1	Push Plate	70E	US32D	RO
1	Pull Plate	107x70C	US32D	RO
1	Closer	4400 SNB	689	YA
1	Kickplate	K1050 12" x 2" LDW 4BE CSK	US32D	RO
1	Door Stop	480	US32D	RO
1	Perimeter Seal	S773BL		PE

Set: 31.0
Doors: 222A-1
Description: Privacy - Closer - Gasket

3	Hinge, Full Mortise	TA2714	US26D	MK
1	Privacy Lock	CRCN 8802FL IND	626	YA
1	Closer	4400 SNB	689	YA
1	Kickplate	K1050 12" x 2" LDW 4BE CSK	US32D	RO
1	Door Stop	480	US32D	RO
1	Perimeter Seal	S773BL		PE

Set: 32.0
Doors: 129-1, OP4
Description: By Others

1	All hardware	By the door manufacturer		OT

END OF SECTION 087100

SECTION 088000 – GLAZING

PART 1 - GENERAL

1.1 RELATED DOCUMENTS

A. Drawings and general provisions of the Contract, including General and Supplementary Conditions and Division 1 Specification Sections, apply to this Section.

1.2 SUMMARY

A. This Section includes glazing for the following products and applications, including those specified in other Sections where glazing requirements are specified by reference to this Section:

1. Windows.
2. Doors.
3. Glazed curtain walls.
4. Glazed entrances.
5. Interior borrowed lites.
6. Interior Storefront framing.
7. Low-e insulating glass
8. Monolithic float glass

1.3 DEFINITIONS

A. Manufacturer: A firm that produces primary glass or fabricated glass as defined in referenced glazing publications.

B. Interspace: Space between lites of an insulating-glass unit that contains dehydrated air or a specified gas.

C. Deterioration of Coated Glass: Defects developed from normal use that are attributed to the manufacturing process and not to causes other than glass breakage and practices for maintaining and cleaning coated glass contrary to manufacturer's written instructions. Defects include peeling, cracking, and other indications of deterioration in metallic coating.

D. Deterioration of Insulating Glass: Failure of the hermetic seal under normal use that is attributed to the manufacturing process and not to causes other than glass breakage and practices for maintaining and cleaning insulating glass contrary to manufacturer's written instructions. Evidence of failure is the obstruction of vision by dust, moisture, or film on interior surfaces of glass.

1.4 PERFORMANCE REQUIREMENTS

A. General: Provide glazing systems capable of withstanding normal thermal movement and wind and impact loads (where applicable) without failure, including loss or glass breakage attributable to the following: defective manufacture, fabrication, and installation; failure of sealants or gaskets to remain watertight and airtight; deterioration of glazing materials; or other defects in construction.

B. Glass Design: Glass thicknesses indicated are minimums and are for detailing only. Confirm glass thicknesses by analyzing Project loads and in-service conditions. Provide glass lites for various size openings in nominal thicknesses indicated, but not less than thicknesses and in strengths (annealed or heat treated) required to meet or exceed the following criteria:

1. Glass Thicknesses: Select minimum glass thicknesses to comply with ASTM E 1300, according to the following requirements:

a. Specified Design Wind Loads: As indicated.
b. Probability of Breakage for Vertical Glazing: 8 lites per 1000 for lites set vertically or not more than 15 degrees off vertical and under wind action.

1) Load Duration: 60 seconds or less.

c. Maximum Lateral Deflection: For the following types of glass supported on all four edges, provide thickness required that limits center deflection at design wind pressure to 1/50 times the short side length or 1 inch (25 mm), whichever is less.

1) For insulating glass.

d. Minimum Glass Thickness for Exterior Lites: Not less than 6 mm.
e. Thickness of Tinted and Heat-Absorbing Glass: Provide the same thickness for each tint color indicated throughout Project.

C. Thermal Movements: Provide glazing that allows for thermal movements resulting from the following maximum change (range) in ambient and surface temperatures acting on glass framing members and glazing components. Base engineering calculation on surface temperatures of materials due to both solar heat gain and nighttime-sky heat loss.

1. Temperature Change (Range): 120 deg F (67 deg C), ambient; 180 deg F (100 deg C), material surfaces.

D. Thermal and Optical Performance Properties: Provide glass with performance properties specified based on manufacturer's published test data, as determined according to procedures indicated below:

1. For monolithic-glass lites, properties are based on units with lites 6 mm thick.
2. For insulating-glass units, properties are based on units with lites 6 mm thick and a nominal 1/2-inch- (13-mm-) wide interspace.

3. Center-of-Glass U-Values: NFRC 100 methodology using LBL-35298 WINDOW 4.1 computer program, expressed as Btu/ sq. ft. x h x deg F (W/sq. m x K).
4. Center-of-Glass Solar Heat Gain Coefficient: NFRC 200 methodology using LBL-35298 WINDOW 4.1 computer program.
5. Solar Optical Properties: NFRC 300.

1.5 SUBMITTALS

A. Product Data: For each glass product and glazing material indicated.

B. Samples: For the following products, in the form of 12-inch- (300-mm-) square Samples for glass.

1. Three samples of each color of tinted float glass.
2. Three samples of Insulating glass for each designation indicated.

C. Glazing Schedule: Use same designations indicated on Drawings for glazed openings in preparing a schedule listing glass types and thicknesses for each size opening and location.

1.6 QUALITY ASSURANCE

A. Installer Qualifications: An experienced installer who has completed glazing similar in material, design, and extent to that indicated for this Project; whose work has resulted in glass installations with a record of successful in-service performance; and who employs glass installers for this Project who are certified under the National Glass Association Glazier Certification Program as Level 2 (Senior Glaziers) or Level 3 (Master Glaziers).

B. Installer Qualifications: An experienced installer who has completed glazing similar in material, design, and extent to that indicated for Project and whose work has resulted in construction with a record of successful in-service performance.

C. Source Limitations for Clear Glass: Obtain clear float glass from one primary-glass manufacturer.

D. Source Limitations for Tinted Glass: Obtain tinted, heat-absorbing, and light-reducing float glass from one primary-glass manufacturer for each tint color indicated.

E. Source Limitations for Coated Glass: Obtain coated glass from one manufacturer for each type of coating and each type and class of float glass indicated.

F. Source Limitations for Insulating Glass: Obtain insulating-glass units from one manufacturer using the same type of glass and other components for each type of unit indicated.

G. Source Limitations for Glazing Accessories: Obtain glazing accessories from one source for each product and installation method indicated.

H. Safety Glass: Category II materials complying with testing requirements in 16 CFR 1201 and ANSI Z97.1.

1. Subject to compliance with requirements, permanently mark safety glass with certification label of Safety Glazing Certification Council or another certification agency acceptable to authorities having jurisdiction.

I. Glazing Publications: Comply with published recommendations of glass product manufacturers and organizations below, unless more stringent requirements are indicated. Refer to these publications for glazing terms not otherwise defined in this Section or in referenced standards.

1. GANA Publications: GANA'S "Glazing Manual" and "Laminated Glass Design Guide."
2. AAMA Publications: AAMA GDSG-1, "Glass Design for Sloped Glazing," and AAMA TIR-A7, "Sloped Glazing Guidelines."
3. SIGMA Publications: SIGMA TM-3000, "Vertical Glazing Guidelines," and SIGMA TB-3001, "Sloped Glazing Guidelines."

J. Insulating-Glass Certification Program: Permanently marked either on spacers or on at least one component lite of units with appropriate certification label of the following inspecting and testing agency:

1. Insulating Glass Certification Council.
2. Associated Laboratories, Inc.
3. National Accreditation and Management Institute.

K. Preinstallation Conference: Conduct conference at Project site to comply with requirements in Division 1 Section "Project Meetings."

1.7 DELIVERY, STORAGE, AND HANDLING

A. Protect glazing materials according to manufacturer's written instructions and as needed to prevent damage to glass and glazing materials from condensation, temperature changes, direct exposure to sun, or other causes.

B. For insulating-glass units that will be exposed to substantial altitude changes, comply with insulating-glass manufacturer's written recommendations for venting and sealing to avoid hermetic seal ruptures.

1.8 PROJECT CONDITIONS

A. Environmental Limitations: Do not proceed with glazing when ambient and substrate temperature conditions are outside limits permitted by glazing material manufacturers and when glazing channel substrates are wet from rain, frost, condensation, or other causes.

1.9 WARRANTY

A. General Warranty: Special warranties specified in this Article shall not deprive Owner of other rights Owner may have under other provisions of the Contract Documents and shall be in addition to, and run concurrent with, other warranties made by Contractor under requirements of the Contract Documents.

B. Manufacturer's Special Warranty on Insulating Glass: Written warranty, made out to Owner and signed by insulating-glass manufacturer agreeing to furnish replacements for insulating-glass units that deteriorate as defined in "Definitions" Article, f.o.b. the nearest shipping point to Project site, within specified warranty period indicated below.

1. Warranty Period: 10 years from date of Substantial Completion.

PART 2 - PRODUCTS

2.1 PRODUCTS AND MANUFACTURERS

A. Products: Subject to compliance with requirements, provide one of the products indicated in schedules at the end of Part 3.

2.2 PRIMARY FLOAT GLASS

A. Float Glass: ASTM C 1036, Type I (transparent glass, flat), Quality q3 (glazing select); class as indicated in schedules at the end of Part 3.

2.3 INSULATING GLASS

A. Insulating-Glass Units: Preassembled units consisting of sealed lites of glass separated by a dehydrated interspace, and complying with ASTM E 774 for Class CBA units and with requirements specified in this Article and in the Insulating-Glass Schedule at the end of Part 3.

1. Provide Kind FT (fully tempered) where safety glass.

B. All tempered glass shall be heat treated by horizontal (roller hearth) process with inherent roller wave distortion parallel to the bottom edge of the glass as install when specified.
1. Flatness Tolerances:
a) Roller wave or ripple: The deviation from flatness at any peak shall not exceed 0.003" as measured per peak to valley for 6mm thick glass. Electronic read out per lite is required as a submittal of this fabricated tolerance.
b) Bow and Warp: The bow and warp tolerances shall not exceed 1/32" per linear foot.
c) Fully tempered glass shall be heat soaked to DIN 18516.

C. Overall Unit Thickness and Thickness of Each Lite: Dimensions indicated in the Insulating-Glass Schedule at the end of Part 3 are nominal and the overall thicknesses of units are measured perpendicularly from outer surfaces of glass lites at unit's edge.

D. Sealing System: Dual seal, with primary and secondary sealants as follows:

1. Manufacturer's standard sealants.

E. Spacer Specifications: Manufacturer's standard spacer material and construction complying with the following requirements:

1. Aluminum with mill or clear-anodized finish
2. Desiccant: Molecular sieve or silica gel, or blend of both.

2.4 LAMINATED GLASS

A. Laminated Glass: ASTM C 1172, and complying with testing requirements in 16 CFR 1201 for Category II materials, and with other requirements specified. Use materials that have a proven record of no tendency to bubble, discolor, or lose physical and mechanical properties after fabrication and installation.

1. Construction: Laminate glass with polyvinyl butyral interlayer to comply with interlayer manufacturer's written recommendations.
2. Interlayer Thickness: Provide thickness not less than that indicated and as needed to comply with requirements.
3. Interlayer Color: Clear unless otherwise indicated.

2.5 GLAZING GASKETS

A. Dense Compression Gaskets: Molded or extruded gaskets of material indicated below, complying with standards referenced with name of elastomer indicated below, and of profile and hardness required to maintain watertight seal:

1. Neoprene, ASTM C 864.
2. EPDM, ASTM C 864.
3. Silicone, ASTM C 1115.
4. Thermoplastic polyolefin rubber, ASTM C 1115.
5. Any material indicated above.

B. Soft Compression Gaskets: Extruded or molded, closed-cell, integral-skinned gaskets of material indicated below; complying with ASTM C 509, Type II, black; and of profile and hardness required to maintain watertight seal:

1. Neoprene.
2. EPDM.
3. Silicone.
4. Thermoplastic polyolefin rubber.
5. Any material indicated above.

2.6 MISCELLANEOUS GLAZING MATERIALS

A. General: Provide products of material, size, and shape complying with referenced glazing standard, requirements of manufacturers of glass and other glazing materials for application indicated, and with a proven record of compatibility with surfaces contacted in installation.

B. Cleaners, Primers, and Sealers: Types recommended by sealant or gasket manufacturer.

C. Setting Blocks: Elastomeric material with a Shore A durometer hardness of 85, plus or minus 5.

D. Spacers: Elastomeric blocks or continuous extrusions with a Shore A durometer hardness required by glass manufacturer to maintain glass lites in place for installation indicated.

E. Edge Blocks: Elastomeric material of hardness needed to limit glass lateral movement (side walking).

2.7 FABRICATION OF GLASS AND OTHER GLAZING PRODUCTS

A. Fabricate glass and other glazing products in sizes required to glaze openings indicated for Project, with edge and face clearances, edge and surface conditions, and bite complying with written instructions of product manufacturer and referenced glazing standard, to comply with system performance requirements.

B. Clean-cut or flat-grind vertical edges of butt-glazed monolithic lites in a manner that produces square edges with slight kerfs at junctions with indoor and outdoor faces.

C. Grind smooth and polish exposed glass edges.

PART 3 - EXECUTION

3.1 EXAMINATION

A. Examine framing glazing, with Installer present, for compliance with the following:

1. Manufacturing and installation tolerances, including those for size, squareness, and offsets at corners.
2. Presence and functioning of weep system.
3. Minimum required face or edge clearances.
4. Effective sealing between joints of glass-framing members.

B. Proceed with installation only after unsatisfactory conditions have been corrected.

3.2 PREPARATION

A. Clean glazing channels and other framing members receiving glass immediately before glazing. Remove coatings not firmly bonded to substrates.

3.3 GLAZING, GENERAL

A. Comply with combined written instructions of manufacturers of glass, sealants, gaskets, and other glazing materials, unless more stringent requirements are indicated, including those in referenced glazing publications.

B. Glazing channel dimensions, as indicated on Drawings, provide necessary bite on glass, minimum edge and face clearances, and adequate sealant thicknesses, with reasonable tolerances. Adjust as required by Project conditions during installation.

C. Protect glass edges from damage during handling and installation. Remove damaged glass from Project site and legally dispose of off Project site. Damaged glass is glass with edge damage or other imperfections that, when installed, could weaken glass and impair performance and appearance.

D. Apply primers to joint surfaces where required for adhesion of sealants, as determined by preconstruction sealant-substrate testing.

E. Install setting blocks in sill rabbets, sized and located to comply with referenced glazing publications, unless otherwise required by glass manufacturer. Set blocks in thin course of compatible sealant suitable for heel bead.

F. Do not exceed edge pressures stipulated by glass manufacturers for installing glass lites.

G. Provide spacers for glass lites where the length plus width is larger than 50 inches (1270 mm) as follows:

1. Locate spacers directly opposite each other on both inside and outside faces of glass. Install correct size and spacing to preserve required face clearances, unless gaskets and glazing tapes are used that have demonstrated ability to maintain required face clearances and to comply with system performance requirements.
2. Provide 1/8-inch (3-mm) minimum bite of spacers on glass and use thickness equal to sealant width. With glazing tape, use thickness slightly less than final compressed thickness of tape.

H. Provide edge blocking where indicated or needed to prevent glass lites from moving sideways in glazing channel, as recommended in writing by glass manufacturer and according to requirements in referenced glazing publications.

I. Set glass lites in each series with uniform pattern, draw, bow, and similar characteristics.

J. Where wedge-shaped gaskets are driven into one side of channel to pressurize sealant or gasket on opposite side, provide adequate anchorage so gasket cannot walk out when installation is subjected to movement.

K. Square cut wedge-shaped gaskets at corners and install gaskets in a manner recommended by gasket manufacturer to prevent corners from pulling away; seal corner joints and butt joints with sealant recommended by gasket manufacturer.

3.4 GASKET GLAZING (DRY)

A. Fabricate compression gaskets in lengths recommended by gasket manufacturer to fit openings exactly, with stretch allowance during installation.

B. Insert soft compression gasket between glass and frame or fixed stop so it is securely in place with joints miter cut and bonded together at corners.

C. Center glass lites in openings on setting blocks and press firmly against soft compression gasket by inserting dense compression gaskets formed and installed to lock in place against faces of removable stops. Start gasket applications at corners and work toward centers of openings. Compress gaskets to produce a weathertight seal without developing bending stresses in glass. Seal gasket joints with sealant recommended by gasket manufacturer.

D. Install gaskets so they protrude past face of glazing stops.

3.5 PROTECTION AND CLEANING

A. Protect exterior glass from damage immediately after installation by attaching crossed streamers to framing held away from glass. Do not apply markers to glass surface. Remove nonpermanent labels, and clean surfaces.

B. Protect glass from contact with contaminating substances resulting from construction operations, including weld splatter. If, despite such protection, contaminating substances do come into contact with glass, remove them immediately as recommended by glass manufacturer.

C. Examine glass surfaces adjacent to or below exterior concrete and other masonry surfaces at frequent intervals during construction, but not less than once a month, for build-up of dirt, scum, alkaline deposits, or stains; remove as recommended by glass manufacturer.

D. Remove and replace glass that is broken, chipped, cracked, abraded, or damaged in any way, including natural causes, accidents, and vandalism, during construction period.

E. Wash glass on both exposed surfaces in each area of Project not more than four days before date scheduled for inspections that establish date of Substantial Completion. Wash glass as recommended by glass manufacturer.

3.6 MONOLITHIC FLOAT-GLASS SCHEDULE

A. Float Glass Products: Subject to compliance with requirements, provide one of the following:
   a. Guardian Industries Corp.
   b. Pilkington North America
   c. Vitro Architectural Glass (formerly PPG)

B. Glass Type "G-1": Clear fully tempered float glass.

   1. Thickness: ¼" (6.0 mm).
   2. Provide safety glazing labeling.

C. Glass Type "S-1": ¼" Single Pane Spandrel Glass

   1. Thickness: ¼" (6.0 mm).

   2. Color: To be selected from manufacturer's full line of available colors

3.7 INSULATING-GLASS SCHEDULE

A. Manufacturers: Subject to compliance with requirements, provide one of the following:
   1. Vitro Architectural Glass (Formerly PPG) – Basis of Design
   2. Or equal performing system by Oldcastle Glass
   3. Or equal performing system by Viracon

B. Glass Type"IG-1": Low-e-coated, clear insulating glass.

   1. Overall Unit Thickness: 1 inch (25 mm).
   2. Thickness of Each Glass Lite: 6.0 mm.
   3. Outdoor Lite: clear fully tempered float glass.
   4. Interspace Content: Air.
   5. Indoor Lite: clear Fully tempered float glass.
   6. Low-E Coating: Pyrolytic or sputtered on second surface.
   7. Visible Light Transmittance: 51 percent minimum.
   8. Winter Nighttime U-Factor: 0.29 Btu/(hr x sqft x °F) maximum.
   9. Summer Daytime U-Factor: 0.27 Btu/(hr x sqft x °F) maximum.
   10. Shading Coefficient: 0.27
   11. Solar Heat Gain Coefficient (SHGC): 0.23
   12. Provide safety glazing labeling
   13. Basis of Design: Vitro Architectural Glass Solarban 90

C. Glass Type "IGS-1": Ceramic-coated, Low-e, insulating spandrel glass.

   1. Overall Unit Thickness: 1 inch (25 mm).
   2. Thickness of Each Glass Lite: 6.0 mm.
   3. Outdoor Lite: clear fully tempered float glass.
   4. Interspace Content: Air.
   5. Indoor Lite: clear Fully tempered float glass.

6. Coating location: Fourth surface – ceramic frit
7. Color: To be selected from manufacturer's full line of available colors

END OF SECTION 088000

SECTION 092116 – GYPSUM BOARD SHAFT WALL ASSEMBLIES

PART 1 - GENERAL

1.1 RELATED DOCUMENTS

A. Drawings and general provisions of the Contract, including General and Supplementary Conditions and Division 01 Specification Sections, apply to this Section.

1.2 SUMMARY

A. Section Includes:

1. Gypsum board shaft wall assemblies.

1.3 ACTION SUBMITTALS

A. Product Data: For each component of gypsum board shaft wall assembly.

1.4 DELIVERY, STORAGE, AND HANDLING

A. Store materials inside under cover and keep them dry and protected against weather, condensation, direct sunlight, construction traffic, and other potential causes of damage. Stack panels flat and support them on risers on a flat platform to prevent sagging.

1.5 FIELD CONDITIONS

A. Environmental Limitations: Comply with gypsum-shaftliner-board manufacturer's written instructions.

B. Do not install finish panels until installation areas are enclosed and conditioned.

C. Do not install panels that are wet, moisture damaged, or mold damaged.

1. Indications that panels are wet or moisture damaged include, but are not limited to, discoloration, sagging, and irregular shape.
2. Indications that panels are mold damaged include, but are not limited to, fuzzy or splotchy surface contamination and discoloration.

PART 2 - PRODUCTS

2.1 PERFORMANCE REQUIREMENTS

A. Fire-Resistance-Rated Assemblies: For fire-resistance-rated assemblies, provide materials and construction identical to those tested in assembly indicated according to ASTM E119 by an independent testing agency.

B. STC-Rated Assemblies: Provide materials and construction identical to those of assemblies tested according to ASTM E90 and classified according to ASTM E413 by a testing and inspecting agency.

2.2 GYPSUM BOARD SHAFT WALL ASSEMBLIES

A. Fire-Resistance Rating: As indicated on Drawings.

B. STC Rating: 51 minimum.

C. Gypsum Shaftliner Board:

1. Type X: ASTM C1396/C1396M; manufacturer's proprietary fire-resistive liner panels with paper faces, 1 inch (25.4 mm) thick, with double beveled long edges.

2. Moisture- and Mold-Resistant Type X: ASTM C1396/C1396M; manufacturer's proprietary fire-resistive liner panels with ASTM D3273 mold-resistance score of 10 as rated according to ASTM D3274, 1 inch (25.4 mm) thick, and with double beveled long edges.

D. Non-Load-Bearing Steel Framing, General: Complying with ASTM C645 requirements for metal unless otherwise indicated and complying with requirements for fire-resistance-rated assembly indicated.

1. Protective Coating: ASTM A653/A653M, G40 (Z120), hot-dip galvanized unless otherwise indicated.

E. Studs: Manufacturer's standard profile for repetitive, corner, and end members as follows:

1. Depth: As indicated.
2. Minimum Base-Metal Thickness: 0.030 inch (0.75 mm).

F. Runner Tracks: Manufacturer's standard J-profile track with manufacturer's standard long-leg length, but at least 2 inches (51 mm) long and matching studs in depth.

1. Minimum Base-Metal Thickness: Matching steel studs.

G. Firestop Tracks: Top runner manufactured to allow partition heads to expand and contract with movement of the structure while maintaining continuity of fire-resistance-

rated assembly indicated; in thickness not less than indicated for studs and in width to accommodate depth of studs.

H. Elevator-Hoistway-Entrance Struts: Manufacturer's standard J-profile jamb strut with long-leg length of 3 inches (76 mm), matching studs in depth, and not less than 0.033 inch (0.84 mm**)** thick.

I. Finish Panels: Gypsum board as specified in Section 092900 "Gypsum Board."

J. Sound Attenuation Blankets: As specified in Section 072100 "Building Insulation."

2.3 AUXILIARY MATERIALS

A. Provide auxiliary materials that comply with shaft wall manufacturer's written instructions.

B. Trim Accessories: Cornerbead, edge trim, and control joints of material and shapes as specified in Section 092900 "Gypsum Board**"** that comply with gypsum board shaft wall assembly manufacturer's written instructions for application indicated.

C. Steel Drill Screws: ASTM C1002 unless otherwise indicated.

D. Track Fasteners: Power-driven fasteners of size and material required to withstand loading conditions imposed on shaft wall assemblies without exceeding allowable design stress of track, fasteners, or structural substrates in which anchors are embedded.

1. Power-Actuated Anchors: Fastener system of type suitable for application indicated, fabricated from corrosion-resistant materials, with allowable load capacities calculated according to ICC-ES AC70, greater than or equal to the design load, as determined by testing per ASTM E1190 conducted by a qualified testing agency.

E. Reinforcing: Galvanized-steel reinforcing strips with 0.033-inch (0.84-mm) minimum thickness of base metal (uncoated).

F. Acoustical Sealant: Section 079200 "Joint Sealants."

G. Gypsum Board Cants:

1. Gypsum Board Panels: As specified in Section 092900 "Gypsum Board," Type X, 1/2- or 5/8-inch (13- or 16-mm) panels.
2. Adhesive: Laminating adhesive as specified in Section 092900 "Gypsum Board."
3. Non-Load-Bearing Steel Framing: As specified in Section 092216 "Non-Structural Metal Framing."

PART 3 - EXECUTION

3.1 EXAMINATION

A. Examine substrates and conditions, with Installer present, for compliance with requirements for installation tolerances and other conditions affecting performance of the Work.

B. Examine panels before installation. Reject panels that are wet, moisture damaged, or mold damaged.

C. Proceed with installation only after unsatisfactory conditions have been corrected.

3.2 PREPARATION

A. Sprayed Fire-Resistive Materials: Coordinate with gypsum board shaft wall assemblies so both elements of Work remain complete and undamaged. Patch or replace sprayed fire-resistive materials removed or damaged during installation of shaft wall assemblies to comply with requirements specified in Section 078100 "Applied Fire Protection."

B. After sprayed fire-resistive materials are applied, remove only to extent necessary for installation of gypsum board shaft wall assemblies and without reducing the fire-resistive material thickness below that which is required to obtain fire-resistance rating indicated. Protect remaining fire-resistive materials from damage.

3.3 INSTALLATION

A. General: Install gypsum board shaft wall assemblies to comply with requirements of fire-resistance-rated assemblies indicated and manufacturer's written installation instructions.

B. Do not bridge building expansion joints with shaft wall assemblies; frame both sides of expansion joints with furring and other support.

C. Install supplementary framing in gypsum board shaft wall assemblies around openings and as required for blocking, bracing, and support of gravity and pullout loads of fixtures, equipment, services, heavy trim, furnishings, wall-mounted door stops, and similar items that cannot be supported directly by shaft wall assembly framing.

1. Reinforcing: Provide where items attach directly to shaft wall assembly as indicated on Drawings; accurately position and secure behind at least one layer of face panel.

D. Penetrations: At penetrations in shaft wall, maintain fire-resistance rating of shaft wall assembly by installing supplementary steel framing around perimeter of penetration and fire protection behind boxes containing wiring devices, elevator call buttons and floor indicators, and similar items.

E. Isolate perimeter of gypsum panels from building structure to prevent cracking of panels while maintaining continuity of fire-rated construction.

F. Firestop Tracks: Where indicated, install to maintain continuity of fire-resistance-rated assembly indicated.

G. Control Joints: Install control joints according to ASTM C840 and in specific locations approved by Architect while maintaining fire-resistance rating of gypsum board shaft wall assemblies.

H. Sound-Rated Shaft Wall Assemblies: Seal gypsum board shaft walls with acoustical sealant at perimeter of each assembly where it abuts other work and at joints and penetrations within each assembly.

I. Gypsum Board Cants: At projections into shaft exceeding 4 inches (102 mm), install gypsum board cants covering tops of projections.

1. Slope cant panels at least 75 degrees from horizontal. Set base edge of panels in adhesive and secure top edges to shaft walls at 24 inches (610 mm) o.c. with screws fastened to shaft wall framing.
2. Where non-load-bearing steel framing is required to support gypsum board cants, install framing at 24 inches (610 mm) o.c. and extend studs from the projection to shaft wall framing.

J. Installation Tolerance: Install each framing member so fastening surfaces vary not more than 1/8 inch (3 mm) from the plane formed by faces of adjacent framing.

3.4 PROTECTION

A. Protect installed products from damage from weather, condensation, direct sunlight, construction, and other causes during remainder of the construction period.

B. Remove and replace panels that are wet, moisture damaged, or mold damaged.

1. Indications that panels are wet or moisture damaged include, but are not limited to, discoloration, sagging, and irregular shape.
2. Indications that panels are mold damaged include, but are not limited to, fuzzy or splotchy surface contamination and discoloration.

END OF SECTION 092116

SECTION 092216 - NON-STRUCTURAL METAL FRAMING

PART 1 - GENERAL

1.1 RELATED DOCUMENTS

A. Drawings and general provisions of the Contract, including General and Supplementary Conditions and Division 01 Specification Sections, apply to this Section.

1.2 SUMMARY

A. Section Includes:

1. Non-load-bearing steel framing systems for interior partitions.
2. Suspension systems for interior ceilings and soffits.
3. Grid suspension systems for gypsum board ceilings.

1.3 ACTION SUBMITTALS

A. Product Data: For each type of product.

1.4 INFORMATIONAL SUBMITTALS

A. Product Certificates: For each type of code-compliance certification for studs and tracks.

B. Evaluation Reports: For embossed steel studs and tracks, from ICC-ES or other qualified testing agency acceptable to authorities having jurisdiction.

1.5 QUALITY ASSURANCE

A. Code-Compliance Certification of Studs and Tracks: Provide documentation that framing members are certified according to the product-certification program of the Certified Steel Stud Association, the Steel Framing Industry Association, or the Steel Stud Manufacturers Association.

PART 2 - PRODUCTS

2.1 PERFORMANCE REQUIREMENTS

A. Fire-Test-Response Characteristics: For fire-resistance-rated assemblies that incorporate non-load-bearing steel framing, provide materials and construction identical to those

tested in assembly indicated, according to ASTM E 119 by an independent testing agency.

B. STC-Rated Assemblies: For STC-rated assemblies, provide materials and construction identical to those tested in assembly indicated on Drawings, according to ASTM E 90 and classified according to ASTM E 413 by an independent testing agency.

C. Horizontal Deflection: For wall assemblies, limited to 1/360 of the wall height based on horizontal loading of 10 lbf/sq. ft.

2.2 FRAMING SYSTEMS

A. Framing Members, General: Comply with ASTM C 754 for conditions indicated.

1. Steel Sheet Components: Comply with ASTM C 645 requirements for metal unless otherwise indicated.
2. Protective Coating: ASTM A 653/A 653M, G40 (Z120), hot-dip galvanized unless otherwise indicated.

B. Studs and Tracks: ASTM C 645. Use either steel studs and tracks or embossed steel studs and tracks.

1. Steel Studs and Tracks:
   a. Minimum Base-Metal Thickness: As required by performance requirements for horizontal deflection.
   b. Depth: As indicated on Drawings.

2. Embossed Steel Studs and Tracks: Roll-formed and embossed with surface deformations to stiffen the framing members so that they are structurally equivalent to conventional ASTM C 645 steel studs and tracks.
   a. Minimum Base-Metal Thickness: As required by horizontal deflection performance requirements.
   b. Depth: As indicated on Drawings.

C. Slip-Type Head Joints: Where indicated, provide the following:
1. Deflection Track: Steel sheet top track manufactured to prevent cracking of finishes applied to interior partition framing resulting from deflection of structure above; in thickness not less than indicated for studs and in width to accommodate depth of studs.

D. Flat Strap and Backing Plate: Steel sheet for blocking and bracing in length and width indicated.
1. Minimum Base-Metal Thickness: 0.0329 inch (0.836 mm).

E. Cold-Rolled Channel Bridging: Steel, 0.0538-inch (1.367-mm) minimum base-metal thickness, with minimum 1/2-inch- (13-mm-) wide flanges.
1. Depth: 1-1/2 inches (38 mm).
2. Clip Angle: Not less than 1-1/2 by 1-1/2 inches (38 by 38 mm), 0.068-inch- (1.72-mm-) thick, galvanized steel.

F. Hat-Shaped, Rigid Furring Channels: ASTM C 645.
   1. Minimum Base-Metal Thickness: 0.0329 inch (0.836 mm).
   2. Depth: As indicated on Drawings.

G. Cold-Rolled Furring Channels: 0.053-inch (1.34-mm) uncoated-steel thickness, with minimum 1/2-inch- (13-mm-) wide flanges.

   1. Depth: As indicated on Drawings.
   2. Furring Brackets: Adjustable, corrugated-edge-type steel sheet with minimum uncoated-steel thickness of 0.0329 inch (0.8 mm).
   3. Tie Wire: ASTM A 641/A 641M, Class 1 zinc coating, soft temper, 0.062-inch- (1.59-mm-) diameter wire, or double strand of 0.048-inch- (1.21-mm-) diameter wire.

H. Z-Shaped Furring: With slotted or nonslotted web, face flange of 1-1/4 inches (32 mm), wall attachment flange of 7/8 inch (22 mm), minimum uncoated-metal thickness of 0.0179 inch (0.455 mm), and depth required to fit insulation thickness indicated.

2.3 SUSPENSION SYSTEMS

A. Tie Wire: ASTM A 641/A 641M, Class 1 zinc coating, soft temper, 0.062-inch- (1.59-mm-) diameter wire, or double strand of 0.048-inch- (1.21-mm-) diameter wire.

B. Wire Hangers: ASTM A 641/A 641M, Class 1 zinc coating, soft temper, 0.16 inch (4.12 mm) in diameter.

C. Carrying Channels (Main Runners): Cold-rolled, commercial-steel sheet with a base-metal thickness of 0.0538 inch (1.367 mm) and minimum 1/2-inch- (13-mm-) wide flanges.

   1. Depth: As indicated on Drawings.

D. Grid Suspension System for Gypsum Board Ceilings: ASTM C 645, direct-hung system composed of main beams and cross-furring members that interlock.

2.4 AUXILIARY MATERIALS

A. General: Provide auxiliary materials that comply with referenced installation standards.

   1. Fasteners for Steel Framing: Of type, material, size, corrosion resistance, holding power, and other properties required to fasten steel members to substrates.

PART 3 - EXECUTION

3.1 EXAMINATION

A. Examine areas and substrates, with Installer present, and including welded hollow-metal frames, cast-in anchors, and structural framing, for compliance with requirements and other conditions affecting performance of the Work.

B. Proceed with installation only after unsatisfactory conditions have been corrected.

3.2 INSTALLATION, GENERAL

A. Installation Standard: ASTM C 754.
   1. Gypsum Board Assemblies: Also comply with requirements in ASTM C 840 that apply to framing installation.

B. Install framing and accessories plumb, square, and true to line, with connections securely fastened.

C. Install supplementary framing, and blocking to support fixtures, equipment services, casework, heavy trim, grab bars, toilet accessories, furnishings, or similar construction.

D. Install bracing at terminations in assemblies.

E. Do not bridge building control and expansion joints with non-load-bearing steel framing members. Frame both sides of joints independently. Closely coordinate locations of control joints with architect prior to commencement of work specified in this section.

3.3 INSTALLING FRAMED ASSEMBLIES

A. Install framing system components according to spacings indicated, but not greater than spacings required by referenced installation standards for assembly types.

   1. Single-Layer Application: As required by horizontal deflection performance requirements for 3 5/8 inch studs with gypsum board on both sides full height, unless otherwise indicated.
   2. Single-Layer Application: As required by horizontal deflection performance requirements for 6 inch studs and 8 inch studs with gypsum board on both sides full height, unless otherwise indicated.
   3. Multilayer Application: 16 inches (406 mm) o.c., unless otherwise indicated.
   4. Tile Backing Panels: 16 inches (406 mm) o.c. unless otherwise indicated.

B. Where studs are installed directly against exterior masonry walls or dissimilar metals at exterior walls, install isolation strip between studs and exterior wall.

C. Install studs so flanges within framing system point in same direction.

D. Install tracks at floors and overhead supports. Extend framing full height to structural supports or substrates above suspended ceilings except where partitions are indicated to terminate at suspended ceilings. Continue framing around ducts that penetrate partitions above ceiling.

1. Slip-Type Head Joints: Where framing extends to overhead structural supports, install to produce joints at tops of framing systems that prevent axial loading of finished assemblies.
2. Door Openings: Screw vertical studs at jambs to jamb anchor clips on door frames; install track section (for cripple studs) at head and secure to jamb studs.

    a. Install two studs at each jamb unless otherwise indicated.
    b. Install cripple studs at head adjacent to each jamb stud, with a minimum 1/2-inch (13-mm) clearance from jamb stud to allow for installation of control joint in finished assembly.
    c. Extend jamb studs through suspended ceilings and attach to underside of overhead structure.

3. Other Framed Openings: Frame openings other than door openings the same as required for door openings unless otherwise indicated. Install framing below sills of openings to match framing required above door heads.
4. Fire-Resistance-Rated Partitions: Install framing to comply with fire-resistance-rated assembly indicated and support closures and to make partitions continuous from floor to underside of solid structure.

5. Sound-Rated Partitions: Install framing to comply with sound-rated assembly indicated.
6. Curved Partitions:

    a. Bend track to uniform curve and locate straight lengths so they are tangent to arcs.
    b. Begin and end each arc with a stud, and space intermediate studs equally along arcs. On straight lengths of no fewer than two studs at ends of arcs, place studs 6 inches (150 mm) o.c.

E. Direct Furring:
1. Attach to concrete or masonry with stub nails, screws designed for masonry attachment, or powder-driven fasteners spaced 24 inches (610 mm) o.c.

F. Installation Tolerance: Install each framing member so fastening surfaces vary not more than 1/8 inch (3 mm) from the plane formed by faces of adjacent framing.

3.4 INSTALLING CEILING SUSPENSION SYSTEMS

A. Install suspension system components according to spacings indicated, but not greater than spacings required by referenced installation standards for assembly types.

1. Hangers: 48 inches (1219 mm) o.c.
2. Carrying Channels (Main Runners): 48 inches (1219 mm) o.c.

B. Isolate suspension systems from building structure where they abut or are penetrated by building structure to prevent transfer of loading imposed by structural movement.

C. Suspend hangers from building structure as follows:

1. Install hangers plumb and free from contact with insulation or other objects within ceiling plenum that are not part of supporting structural or suspension system.

    a. Splay hangers only where required to miss obstructions and offset resulting horizontal forces by bracing, countersplaying, or other equally effective means.

2. Where width of ducts and other construction within ceiling plenum produces hanger spacings that interfere with locations of hangers required to support standard suspension system members, install supplemental suspension members and hangers in the form of trapezes or equivalent devices.

    a. Size supplemental suspension members and hangers to support ceiling loads within performance limits established by referenced installation standards.

3. Wire Hangers: Secure by looping and wire tying, either directly to structures or to inserts, eye screws, or other devices and fasteners that are secure and appropriate for substrate, and in a manner that will not cause hangers to deteriorate or otherwise fail.
4. Flat Hangers: Secure to structure, including intermediate framing members, by attaching to inserts, eye screws, or other devices and fasteners that are secure and appropriate for structure and hanger, and in a manner that will not cause hangers to deteriorate or otherwise fail.
5. Do not attach hangers to steel roof deck.
6. Do not attach hangers to permanent metal forms. Furnish cast-in-place hanger inserts that extend through forms.
7. Do not attach hangers to rolled-in hanger tabs of composite steel floor deck.
8. Do not connect or suspend steel framing from ducts, pipes, or conduit.

D. Fire-Resistance-Rated Assemblies: Wire tie furring channels to supports.

E. Grid Suspension Systems: Attach perimeter wall track or angle where grid suspension systems meet vertical surfaces. Mechanically join main beam and cross-furring members to each other and butt-cut to fit into wall track.

F. Installation Tolerances: Install suspension systems that are level to within 1/8 inch in 12 feet (3 mm in 3.6 m) measured lengthwise on each member that will receive finishes and transversely between parallel members that will receive finishes.

END OF SECTION 092216

SECTION 092900 - GYPSUM BOARD

PART 1 - GENERAL

1.1 RELATED DOCUMENTS

A. Drawings and general provisions of the Contract, including General and Supplementary Conditions and Division 01 Specification Sections, apply to this Section.

1.2 SUMMARY

A. Section Includes:

1. Interior gypsum board.
2. Tile backing panels.

1.3 ACTION SUBMITTALS

A. Product Data: For each type of product.

B. Samples: For the following products:

1. Trim Accessories: Full-size Sample in 12-inch- (300-mm-) long length for each trim accessory indicated.
2. Textured Finishes: Manufacturer's standard size for each textured finish indicated and on same backing indicated for Work.

1.4 QUALITY ASSURANCE

A. Mockups: Before beginning gypsum board installation, install mockups of at least 100 sq. ft. (9 sq. m) in surface area to demonstrate aesthetic effects and set quality standards for materials and execution.

1. Install mockups for the following:

a. Each level of gypsum board finish indicated for use in exposed locations.
b. Each texture finish indicated.

2. Apply or install final decoration indicated, including painting and wallcoverings, on exposed surfaces for review of mockups.
3. Simulate finished lighting conditions for review of mockups.
4. Subject to compliance with requirements, approved mockups may become part of the completed Work if undisturbed at time of Substantial Completion.

1.5 DELIVERY, STORAGE AND HANDLING

A. Store materials inside under cover and keep them dry and protected against weather, condensation, direct sunlight, construction traffic, and other potential causes of damage. Stack panels flat and supported on risers on a flat platform to prevent sagging.

1.6 FIELD CONDITIONS

A. Environmental Limitations: Comply with ASTM C 840 requirements or gypsum board manufacturer's written recommendations, whichever are more stringent.

B. Do not install paper-faced gypsum panels until installation areas are enclosed and conditioned.

C. Do not install panels that are wet, those that are moisture damaged, and those that are mold damaged.

1. Indications that panels are wet or moisture damaged include, but are not limited to, discoloration, sagging, or irregular shape.
2. Indications that panels are mold damaged include, but are not limited to, fuzzy or splotchy surface contamination and discoloration.

PART 2 - PRODUCTS

2.1 PERFORMANCE REQUIREMENTS

A. Fire-Resistance-Rated Assemblies: For fire-resistance-rated assemblies, provide materials and construction identical to those tested in assembly indicated according to ASTM E 119 by an independent testing agency.

B. STC-Rated Assemblies: For STC-rated assemblies, provide materials and construction identical to those tested in assembly indicated according to ASTM E 90 and classified according to ASTM E 413 by an independent testing agency.

2.2 GYPSUM BOARD, GENERAL

A. Size: Provide maximum lengths and widths available that will minimize joints in each area and that correspond with support system indicated.

2.3 INTERIOR GYPSUM BOARD

A. Manufacturers: Subject to compliance with requirements, provide products by one of the following:

1. American Gypsum.

2. CertainTeed Corp.
3. Georgia-Pacific Gypsum LLC.
4. Lafarge North America Inc.
5. National Gypsum Company.
6. PABCO Gypsum.
7. Temple-Inland.
8. USG Corporation.

B. Gypsum Board, Type X: ASTM C 1396/C 1396M.

1. Thickness: 5/8 inch (15.9 mm).
2. Long Edges: Tapered

C. Glass-Mat Interior Gypsum Board (Impact Resistant): ASTM C 1658/C 1658M. With fiberglass mat laminated to both sides. Specifically designed for interior use.

1. Products: Subject to compliance with requirements, provide one of the following:

a. Georgia-Pacific Gypsum LLC; DensArmour Plus.
b. Gold Bond Brand Hi Impact Gypsum Board.

2. Core: 5/8 inch (15.9 mm), abuse resistant.
3. Long Edges: Tapered.
4. Mold Resistance: ASTM D 3273, score of 10.

2.4 TILE BACKING PANELS

A. Glass-Mat, Water-Resistant Backing Board: ASTM C 1178/C 1178M, with manufacturer's standard edges.

1. Products: Subject to compliance with requirements, provide one of the following:

a. CertainTeed Corp.; GlasRoc Tile Backer.
b. Georgia-Pacific Gypsum LLC; DensShield Tile Backer.

2. Core: 5/8 inch (15.9 mm), Type X.
3. Mold Resistance: ASTM D 3273, score of 10.

2.5 TRIM ACCESSORIES

A. Interior Trim: ASTM C 1047.

1. Material: Galvanized or aluminum-coated steel sheet or rolled zinc.
2. Shapes:

a. Cornerbead.
b. Bullnose bead.
c. LC-Bead: J-shaped; exposed long flange receives joint compound.
d. L-Bead: L-shaped; exposed long flange receives joint compound.

e. U-Bead: J-shaped; exposed short flange does not receive joint compound.
f. Reveal Molding: vertical or horizontal recessed reveal
g. Expansion (control) joint.
h. Curved-Edge Cornerbead: With notched or flexible flanges.
i. Wallcovering Base / Termination: vertical or horizontal edge to cover the edge of wall covering that has been applied over gypsum board.

B. Aluminum Trim: Extruded accessories of profiles and dimensions indicated.

1. Manufacturers: Subject to compliance with requirements, provide products by one of the following:

a. Fry Reglet Corp.
b. Gordon, Inc.
c. Pittcon Industries.

2. Aluminum: Alloy and temper with not less than the strength and durability properties of ASTM B 221 (ASTM B 221M), Alloy 6063-T5.
3. Finish: clear anodized finish

2.6 JOINT TREATMENT MATERIALS

A. General: Comply with ASTM C 475/C 475M.

B. Joint Tape:

1. Interior Gypsum Board: Paper.
2. Exterior Gypsum Soffit Board: Paper.
3. Glass-Mat Gypsum Sheathing Board: 10-by-10 glass mesh.
4. Tile Backing Panels: As recommended by panel manufacturer.

C. Joint Compound for Interior Gypsum Board: For each coat use formulation that is compatible with other compounds applied on previous or for successive coats.

1. Prefilling: At open joints, rounded or beveled panel edges, and damaged surface areas, use setting-type taping compound.
2. Embedding and First Coat: For embedding tape and first coat on joints, fasteners, and trim flanges, use setting-type taping compound.

a. Use setting-type compound for installing paper-faced metal trim accessories.

3. Fill Coat: For second coat, use setting-type, sandable topping compound.
4. Finish Coat: For third coat, use setting-type, sandable topping compound.
5. Skim Coat: For final coat of Level 5 finish, use setting-type, sandable topping compound or drying-type, all-purpose compound.

D. Joint Compound for Tile Backing Panels:

1. Glass-Mat, Water-Resistant Backing Panel: As recommended by backing panel manufacturer.

2.7 AUXILIARY MATERIALS

A. General: Provide auxiliary materials that comply with referenced installation standards and manufacturer's written recommendations.

B. Steel Drill Screws: ASTM C 1002, unless otherwise indicated.

1. Use screws complying with ASTM C 954 for fastening panels to steel members from 0.033 to 0.112 inch (0.84 to 2.84 mm) thick.

C. Thermal Insulation: As specified in Division 07.

PART 3 - EXECUTION

3.1 EXAMINATION

A. Examine areas and substrates including welded hollow-metal frames and framing, with Installer present, for compliance with requirements and other conditions affecting performance.

B. Examine panels before installation. Reject panels that are wet, moisture damaged, and mold damaged.

C. Proceed with installation only after unsatisfactory conditions have been corrected.

3.2 APPLYING AND FINISHING PANELS, GENERAL

A. Comply with ASTM C 840.

B. Install ceiling panels across framing to minimize the number of abutting end joints and to avoid abutting end joints in central area of each ceiling. Stagger abutting end joints of adjacent panels not less than one framing member.

C. Install panels with face side out. Butt panels together for a light contact at edges and ends with not more than 1/16 inch (1.5 mm) of open space between panels. Do not force into place.

D. Locate edge and end joints over supports, except in ceiling applications where intermediate supports or gypsum board back-blocking is provided behind end joints. Do not place tapered edges against cut edges or ends. Stagger vertical joints on opposite sides of partitions. Do not make joints other than control joints at corners of framed openings.

E. Form control and expansion joints with space between edges of adjoining gypsum panels.

F. Cover both faces of support framing with gypsum panels in concealed spaces (above ceilings, etc., except in chases braced internally.

1. Unless concealed application is indicated or required for sound, fire, air, or smoke ratings, coverage may be accomplished with scraps of not less than 8 sq. ft. (0.7 sq. m) in area.
2. Fit gypsum panels around ducts, pipes, and conduits.
3. Where partitions intersect structural members projecting below underside of floor/roof slabs and decks, cut gypsum panels to fit profile formed by structural members; allow 1/4- to 3/8-inch- (6.4- to 9.5-mm-) wide joints to install sealant.

G. Isolate perimeter of gypsum board applied to non-load-bearing partitions at structural abutments, except floors. Provide 1/4- to 1/2-inch- (6.4- to 12.7-mm-) wide spaces at these locations and trim edges with edge trim where edges of panels are exposed. Seal joints between edges and abutting structural surfaces with acoustical sealant.

H. Attachment to Steel Framing: Attach panels so leading edge or end of each panel is attached to open (unsupported) edges of stud flanges first.

I. STC-Rated Assemblies: Seal construction at perimeters, behind control joints, and at openings and penetrations with a continuous bead of acoustical sealant. Install acoustical sealant at both faces of partitions at perimeters and through penetrations. Comply with ASTM C 919 and with manufacturer's written recommendations for locating edge trim and closing off sound-flanking paths around or through assemblies, including sealing partitions above acoustical ceilings.

J. Install sound attenuation blankets before installing gypsum panels unless blankets are readily installed after panels have been installed on one side.

3.3 APPLYING INTERIOR GYPSUM BOARD

A. Install interior gypsum board in the following locations:

1. Impact-Resistant Type: Apply to all wall surfaces less than 8'-0" above the floor. Apply standard Type X gypsum board at all other locations as noted on drawings.
2. Tile Backing Panels: Behind all tile finishes.

B. Single-Layer Application:

1. On ceilings, apply gypsum panels before wall/partition board application to greatest extent possible and at right angles to framing unless otherwise indicated.
2. On partitions/walls, apply gypsum panels horizontally (perpendicular to framing) unless otherwise indicated or required by fire-resistance-rated assembly, and minimize end joints.

a. Stagger abutting end joints not less than one framing member in alternate courses of panels.

b. At stairwells and other high walls, install panels horizontally unless otherwise indicated or required by fire-resistance-rated assembly.

3. On Z-furring members, apply gypsum panels vertically (parallel to framing) with no end joints. Locate edge joints over furring members.
4. Fastening Methods: Apply gypsum panels to supports with steel drill screws.

C. Multilayer Application:
1. On partitions/walls, apply gypsum board indicated for base layers and face layers vertically (parallel to framing) with joints of base layers located over stud or furring member and face-layer joints offset at least one stud or furring member with base-layer joints, unless otherwise indicated or required by fire-resistance-rated assembly. Stagger joints on opposite sides of partitions.
2. Fastening Methods: Fasten base layers with screws; fasten face layers with adhesive and supplementary fasteners.

3.4 APPLYING TILE BACKING PANELS at all wall tile applications

A. Glass-Mat, Water-Resistant Backing Panels: Comply with manufacturer's written installation instructions and install at locations indicated to receive tile. Install with 1/4-inch (6.4-mm) gap where panels abut other construction or penetrations.

B. Where tile backing panels abut other types of panels in same plane, shim surfaces to produce a uniform plane across panel surfaces.

3.5 INSTALLING TRIM ACCESSORIES

A. General: For trim with back flanges intended for fasteners, attach to framing with same fasteners used for panels. Otherwise, attach trim according to manufacturer's written instructions.

B. Control Joints: Install control joints at locations indicated on Drawings. Where not shown, according to ASTM C 840 and in specific locations approved by Architect for visual effect.

C. Interior Trim: Install in the following locations:

1. Cornerbead: Use at outside corners unless otherwise indicated.
2. LC-Bead: Use at exposed panel edges.
3. L-Bead: Use where indicated

D. Aluminum Trim: Install in locations indicated on Drawings.

3.6 FINISHING GYPSUM BOARD

A. General: Treat gypsum board joints, interior angles, edge trim, control joints, penetrations, fastener heads, surface defects, and elsewhere as required to prepare

gypsum board surfaces for decoration. Promptly remove residual joint compound from adjacent surfaces.

B. Prefill open joints, rounded or beveled edges, and damaged surface areas.

C. Apply joint tape over gypsum board joints, except for trim products specifically indicated as not intended to receive tape.

D. Gypsum Board Finish Levels: Finish panels to levels indicated below and according to ASTM C 840:

1. Level 1: Ceiling plenum areas, concealed areas, and where indicated.
2. Level 2: Panels that are substrate for tile

3. Level 5: All other locations.

a. Primer and its application to surfaces are specified in other Division 09 Sections.

E. Glass-Mat Faced Panels: Finish according to manufacturer's written instructions.

3.7 APPLYING TEXTURE FINISHES

A. Surface Preparation and Primer: Prepare and apply primer to gypsum panels and other surfaces receiving texture finishes. Apply primer to surfaces that are clean, dry, and smooth.

3.8 PROTECTION

A. Protect adjacent surfaces from drywall compound and promptly remove from floors and other non-drywall surfaces. Repair surfaces stained, marred, or otherwise damaged during drywall application.

B. Protect installed products from damage from weather, condensation, direct sunlight, construction, and other causes during remainder of the construction period.

C. Remove and replace panels that are wet, moisture damaged, and mold damaged.

1. Indications that panels are wet or moisture damaged include, but are not limited to, discoloration, sagging, or irregular shape.
2. Indications that panels are mold damaged include, but are not limited to, fuzzy or splotchy surface contamination and discoloration.

END OF SECTION 092900

SECTION 093013 - CERAMIC TILE

PART 1 - GENERAL

1.1 RELATED DOCUMENTS

A. Drawings and general provisions of the Contract, including General and Supplementary Conditions and Division 01 Specification Sections, apply to this Section.

1.2 SUMMARY

A. Section Includes:

1. Ceramic tile
2. Waterproof membrane.
3. Crack isolation membrane.
4. Metal edge strips.

B. Related Sections:

1. Section 092900 - "Gypsum Board" for cementitious backer units.

1.3 DEFINITIONS

A. General: Definitions in the ANSI A108 series of tile installation standards and in ANSI A137.1 apply to Work of this Section unless otherwise specified.

B. ANSI A108 Series: ANSI A108.01, ANSI A108.02, ANSI A108.1A, ANSI A108.1B, ANSI A108.1C, ANSI A108.4, ANSI A108.5, ANSI A108.6, ANSI A108.8, ANSI A108.9, ANSI A108.10, ANSI A108.11, ANSI A108.12, ANSI A108.13, ANSI A108.14, ANSI A108.15, ANSI A108.16, and ANSI A108.17, which are contained in "American National Standard Specifications for Installation of Ceramic Tile."

C. Module Size: Actual tile size plus joint width indicated.

D. Face Size: Actual tile size, excluding spacer lugs.

1.4 ACTION SUBMITTALS

A. Product Data: For each type of product indicated.

B. Shop Drawings: Show locations of each type of tile and tile pattern. Show widths, details, and locations of expansion, contraction, control, and isolation joints in tile substrates and finished tile surfaces.

C. Samples for Initial Selection: For each type of tile and grout indicated. Include Samples of accessories involving color selection.

D. Samples for Verification:

1. Full-size units of each type and composition of tile and for each color and finish required.
2. For ceramic mosaic tile in color blend patterns, provide full sheets of each color blend.
3. Assembled samples mounted on a rigid panel, with grouted joints, for each type and composition of tile and for each color and finish required. Make samples at least 12 inches (300 mm) square, but not fewer than 4 tiles. Use grout of type and in color or colors approved for completed Work.
4. Full-size units of each type of trim and accessory for each color and finish required.
5. Metal edge strips in 6-inch (150-mm) lengths.

1.5 QUALITY ASSURANCE

A. Source Limitations for Tile: Obtain tile of each type and color or finish from one source or producer.

1. Obtain tile of each type and color or finish from same production run and of consistent quality in appearance and physical properties for each contiguous area.

B. Source Limitations for Setting and Grouting Materials: Obtain ingredients of a uniform quality for each mortar, adhesive, and grout component from one manufacturer and each aggregate from one source or producer.

C. Source Limitations for Other Products: Obtain each of the following products specified in this Section from a single manufacturer for each product:

1. Waterproof membrane.
2. Crack isolation membrane.
3. Joint sealants.
4. Cementitious backer units.
5. Metal edge strips.

1.6 DELIVERY, STORAGE, AND HANDLING

A. Deliver and store packaged materials in original containers with seals unbroken and labels intact until time of use. Comply with requirements in ANSI A137.1 for labeling tile packages.

B. Store tile and cementitious materials on elevated platforms, under cover, and in a dry location.

C. Store aggregates where grading and other required characteristics can be maintained and contamination can be avoided.

D. Store liquid materials in unopened containers and protected from freezing.

E. Handle tile that has temporary protective coating on exposed surfaces to prevent coated surfaces from contacting backs or edges of other units. If coating does contact bonding surfaces of tile, remove coating from bonding surfaces before setting tile.

1.7 PROJECT CONDITIONS

A. Environmental Limitations: Do not install tile until construction in spaces is complete and ambient temperature and humidity conditions are maintained at the levels indicated in referenced standards and manufacturer's written instructions.

PART 2 - PRODUCTS

2.1 PRODUCTS, GENERAL

A. ANSI Ceramic Tile Standard: Provide tile that complies with ANSI A137.1 for types, compositions, and other characteristics indicated.

1. Provide tile complying with Standard grade requirements unless otherwise indicated.

B. ANSI Standards for Tile Installation Materials: Provide materials complying with ANSI A108.02, ANSI standards referenced in other Part 2 articles, ANSI standards referenced by TCA installation methods specified in tile installation schedules, and other requirements specified.

C. Factory Blending: For tile exhibiting color variations within ranges, blend tile in factory and package so tile units taken from one package show same range in colors as those taken from other packages and match approved Samples.

D. Mounting: For factory-mounted tile, provide back- or edge-mounted tile assemblies as standard with manufacturer unless otherwise indicated.

1. Where tile is indicated for installation in swimming pools, on exteriors or in wet areas, do not use back- or edge-mounted tile assemblies unless tile manufacturer specifies in writing that this type of mounting is suitable for installation indicated and has a record of successful in-service performance.

E. Factory-Applied Temporary Protective Coating: Where indicated under tile type, protect exposed surfaces of tile against adherence of mortar and grout by precoating with continuous film of petroleum paraffin wax, applied hot. Do not coat unexposed tile surfaces.

2.2 TILE PRODUCTS

A. Products: See drawings for tile selections

2.3 WATERPROOF MEMBRANE

A. General: Manufacturer's standard product that complies with ANSI A118.10 and is recommended by the manufacturer for the application indicated. Include reinforcement and accessories recommended by manufacturer.

B. Polyethylene Sheet: Polyethylene faced on both sides with fleece webbing; 0.008-inch (0.203-mm) nominal thickness.

1. Products: Subject to compliance with requirements, provide the following:

a. Schluter Systems L.P.; KERDI.

b. Equal by Mapei Corporation

c. Equal Laticrete International, Inc

2.4 CRACK ISOLATION MEMBRANE

A. General: Manufacturer's standard product that complies with ANSI A118.12 for standard performance and is recommended by the manufacturer for the application indicated. Include reinforcement and accessories recommended by manufacturer.

B. Polyethylene Sheet: Polyethylene faced on both sides with fleece webbing; 0.008-inch (0.203-mm) nominal thickness.

1. Products: Subject to compliance with requirements, provide the following:

a. Schluter Systems L.P.; KERDI.

b. Equal by Mapei Corporation

c. Equal Laticrete International, Inc

2.5 SETTING MATERIALS

A. Latex-Portland Cement Mortar (Thin Set): ANSI A118.4.

1. Manufacturers: Subject to compliance with requirements, products by one of the following:

a. Bonsal American; an Oldcastle company.
b. Bostik, Inc.
c. C-Cure.

d. Custom Building Products.
e. Jamo Inc.
f. Laticrete International, Inc.
g. MAPEI Corporation.
h. Mer-Kote Products, Inc.
i. Southern Grouts & Mortars, Inc.
j. TEC; a subsidiary of H. B. Fuller Company.

2. Provide prepackaged, dry-mortar mix combined with acrylic resin liquid-latex additive at Project site.
3. For wall applications, provide mortar that complies with requirements for nonsagging mortar in addition to the other requirements in ANSI A118.4.

B. Water-Cleanable, Tile-Setting Epoxy: ANSI A118.3.

1. Manufacturers: Subject to compliance with requirements, provide products by one of the following:

a. Bonsal American; an Oldcastle company.
b. Bostik, Inc.
c. C-Cure.
d. Custom Building Products.
e. Jamo Inc.
f. Laticrete International, Inc.
g. MAPEI Corporation.
h. Mer-Kote Products, Inc.
i. Southern Grouts & Mortars, Inc.
j. TEC; a subsidiary of H. B. Fuller Company.

2. Provide product capable of withstanding continuous and intermittent exposure to temperatures of up to 140 deg F (60 deg C) and 212 deg F (100 deg C), respectively, and certified by manufacturer for intended use.

2.6 GROUT MATERIALS

A. Polymer-Modified Tile Grout: ANSI A118.7.

1. Manufacturers: Subject to compliance with requirements, provide products by one of the following:

a. Bonsal American; an Oldcastle company.
b. Bostik, Inc.
c. C-Cure.
d. Custom Building Products.
e. Jamo Inc.
f. Laticrete International, Inc.
g. MAPEI Corporation.
h. Southern Grouts & Mortars, Inc.
i. TEC; a subsidiary of H. B. Fuller Company.

2. Polymer Type: Acrylic resin in liquid-latex form for addition to prepackaged dry-grout mix.

B. Water-Cleanable Epoxy Grout: ANSI A118.3.

1. Manufacturers: Subject to compliance with requirements, provide products by one of the following:

a. Atlas Minerals & Chemicals, Inc.
b. Boiardi Products; a QEP company.
c. Bonsal American; an Oldcastle company.
d. Bostik, Inc.
e. C-Cure.
f. Custom Building Products.
g. Jamo Inc.
h. Laticrete International, Inc.
i. MAPEI Corporation.
j. Mer-Kote Products, Inc.
k. Southern Grouts & Mortars, Inc.
l. TEC; a subsidiary of H. B. Fuller Company.

2. Provide product capable of withstanding continuous and intermittent exposure to temperatures of up to 140 deg F (60 deg C) and 212 deg F (100 deg C), respectively, and certified by manufacturer for intended use.

2.7 ELASTOMERIC SEALANTS

A. General: Provide sealants, primers, backer rods, and other sealant accessories that comply with the following requirements and with the applicable requirements in Section 07920 "Joint Sealants."

2.8 MISCELLANEOUS MATERIALS

A. Trowelable Underlayments and Patching Compounds: Latex-modified, portland cement-based formulation provided or approved by manufacturer of tile-setting materials for installations indicated.

B. Metal Edge Strips: Angle or L-shape, height to match tile and setting-bed thickness, metallic or combination of metal and PVC or neoprene base, designed specifically for flooring applications; nickel silver exposed-edge material.

C. Temporary Protective Coating: Either product indicated below that is formulated to protect exposed surfaces of tile against adherence of mortar and grout; compatible with tile, mortar, and grout products; and easily removable after grouting is completed without damaging grout or tile.

1. Petroleum paraffin wax, fully refined and odorless, containing at least 0.5 percent oil with a melting point of 120 to 140 deg F (49 to 60 deg C) per ASTM D 87.

2. Grout release in form of manufacturer's standard proprietary liquid coating that is specially formulated and recommended for use as temporary protective coating for tile.

D. Tile Cleaner: A neutral cleaner capable of removing soil and residue without harming tile and grout surfaces, specifically approved for materials and installations indicated by tile and grout manufacturers.

E. Grout Sealer: Manufacturer's standard product for sealing grout joints and that does not change color or appearance of grout.

2.9 MIXING MORTARS AND GROUT

A. Mix mortars and grouts to comply with referenced standards and mortar and grout manufacturers' written instructions.

B. Add materials, water, and additives in accurate proportions.

C. Obtain and use type of mixing equipment, mixer speeds, mixing containers, mixing time, and other procedures to produce mortars and grouts of uniform quality with optimum performance characteristics for installations indicated.

PART 3 - EXECUTION

3.1 EXAMINATION

A. Examine substrates, areas, and conditions where tile will be installed, with Installer present, for compliance with requirements for installation tolerances and other conditions affecting performance of installed tile.

1. Verify that substrates for setting tile are firm, dry, clean, free of coatings that are incompatible with tile-setting materials including curing compounds and other substances that contain soap, wax, oil, or silicone; and comply with flatness tolerances required by ANSI A108.01 for installations indicated.
2. Verify that concrete substrates for tile floors installed with adhesives or thin-set mortar comply with surface finish requirements in ANSI A108.01 for installations indicated.

    a. Verify that surfaces that received a steel trowel finish have been mechanically scarified.
    b. Verify that protrusions, bumps, and ridges have been removed by sanding or grinding.

3. Verify that installation of grounds, anchors, recessed frames, electrical and mechanical units of work, and similar items located in or behind tile has been completed.
4. Verify that joints and cracks in tile substrates are coordinated with tile joint locations; if not coordinated, adjust joint locations in consultation with Architect.

B. Proceed with installation only after unsatisfactory conditions have been corrected.

3.2 PREPARATION

A. Fill cracks, holes, and depressions in concrete substrates for tile floors installed with adhesives or thin-set mortar with trowelable leveling and patching compound specifically recommended by tile-setting material manufacturer.

B. Where indicated, prepare substrates to receive waterproofing by applying a reinforced mortar bed that complies with ANSI A108.1A and is sloped 1/4 inch per foot (1:50) toward drains.

C. Blending: For tile exhibiting color variations, verify that tile has been factory blended and packaged so tile units taken from one package show same range of colors as those taken from other packages and match approved Samples. If not factory blended, either return to manufacturer or blend tiles at Project site before installing.

D. Field-Applied Temporary Protective Coating: If indicated under tile type or needed to prevent grout from staining or adhering to exposed tile surfaces, precoat them with continuous film of temporary protective coating, taking care not to coat unexposed tile surfaces.

3.3 TILE INSTALLATION

A. Comply with TCA's "Handbook for Ceramic Tile Installation" for TCA installation methods specified in tile installation schedules. Comply with parts of the ANSI A108 Series "Specifications for Installation of Ceramic Tile" that are referenced in TCA installation methods, specified in tile installation schedules, and apply to types of setting and grouting materials used.

1. For the following installations, follow procedures in the ANSI A108 Series of tile installation standards for providing 95 percent mortar coverage:

    a. Exterior tile floors.
    b. Tile floors in wet areas.
    c. Tile swimming pool decks.
    d. Tile floors in laundries.
    e. Tile floors composed of tiles 8 by 8 inches (200 by 200 mm) or larger.
    f. Tile floors composed of rib-backed tiles.

B. Extend tile work into recesses and under or behind equipment and fixtures to form complete covering without interruptions unless otherwise indicated. Terminate work neatly at obstructions, edges, and corners without disrupting pattern or joint alignments.

C. Accurately form intersections and returns. Perform cutting and drilling of tile without marring visible surfaces. Carefully grind cut edges of tile abutting trim, finish, or built-in items for straight aligned joints. Fit tile closely to electrical outlets, piping, fixtures, and other penetrations so plates, collars, or covers overlap tile.

D. Provide manufacturer's standard trim shapes where necessary to eliminate exposed tile edges.

E. Jointing Pattern: Lay tile in grid pattern unless otherwise indicated. Lay out tile work and center tile fields in both directions in each space or on each wall area. Lay out tile work to minimize the use of pieces that are less than half of a tile. Provide uniform joint widths unless otherwise indicated.

1. For tile mounted in sheets, make joints between tile sheets same width as joints within tile sheets so joints between sheets are not apparent in finished work.
2. Where adjoining tiles on floor, base, walls, or trim are specified or indicated to be same size, align joints.
3. Where tiles are specified or indicated to be whole integer multiples of adjoining tiles on floor, base, walls, or trim, align joints unless otherwise indicated.

F. Joint Widths: Unless otherwise indicated, install tile with the following joint widths:

1. Ceramic Mosaic Tile: 1/16 inch (1.6 mm).
2. Paver Tile: 1/4 inch (6.35 mm).
3. Glazed Wall Tile: 1/16 inch (1.6 mm).
4. Decorative Thin Wall Tile: 1/16 inch (1.6 mm).

G. Expansion Joints: Provide expansion joints and other sealant-filled joints, including control, contraction, and isolation joints, where indicated. Form joints during installation of setting materials, mortar beds, and tile. Do not saw-cut joints after installing tiles.

1. Where joints occur in concrete substrates, locate joints in tile surfaces directly above them.
2. Prepare joints and apply sealants to comply with requirements in Section 07920 "Joint Sealants."

H. Metal Edge Strips: Install where exposed edge of tile flooring meets carpet, wood, or other flooring that finishes flush with or below top of tile and no threshold is indicated.

I. Grout Sealer: Apply grout sealer to grout joints according to grout-sealer manufacturer's written instructions. As soon as grout sealer has penetrated grout joints, remove excess sealer and sealer from tile faces by wiping with soft cloth.

3.4 TILE BACKING PANEL INSTALLATION

A. Install cementitious backer units and treat joints according to ANSI A108.11 and manufacturer's written instructions for type of application indicated.

B. Use latex-portland cement mortar for bonding material unless otherwise directed in manufacturer's written instructions.]

3.5 WATERPROOFING INSTALLATION

A. Install waterproofing to comply with ANSI A108.13 and manufacturer's written instructions to produce waterproof membrane of uniform thickness and bonded securely to substrate.

B. Do not install tile or setting materials over waterproofing until waterproofing has cured and been tested to determine that it is watertight.

3.6 CRACK ISOLATION MEMBRANE INSTALLATION

A. Install crack isolation membrane to comply with ANSI A108.17 and manufacturer's written instructions to produce membrane of uniform thickness and bonded securely to substrate.

B. Do not install tile or setting materials over crack isolation membrane until membrane has cured.

3.7 CLEANING AND PROTECTING

A. Cleaning: On completion of placement and grouting, clean all ceramic tile surfaces so they are free of foreign matter.

1. Remove epoxy and latex-portland cement grout residue from tile as soon as possible.
2. Clean grout smears and haze from tile according to tile and grout manufacturer's written instructions but no sooner than 10 days after installation. Use only cleaners recommended by tile and grout manufacturers and only after determining that cleaners are safe to use by testing on samples of tile and other surfaces to be cleaned. Protect metal surfaces and plumbing fixtures from effects of cleaning. Flush surfaces with clean water before and after cleaning.
3. Remove temporary protective coating by method recommended by coating manufacturer and that is acceptable to tile and grout manufacturer. Trap and remove coating to prevent drain clogging.

B. Protect installed tile work with kraft paper or other heavy covering during construction period to prevent staining, damage, and wear. If recommended by tile manufacturer, apply coat of neutral protective cleaner to completed tile walls and floors.

C. Prohibit foot and wheel traffic from tiled floors for at least seven days after grouting is completed.

D. Before final inspection, remove protective coverings and rinse neutral protective cleaner from tile surfaces.

3.8 INTERIOR TILE INSTALLATION SCHEDULE

A. Interior Wall Installations, Studs or Furring:

1. Tile Installation W245-11: Thin-set mortar on coated glass mat water resistant gypsum backer board with waterproof membrane; TCNA W245.

    a. Tile Type: As indicated on drawings for each location.
    b. Thin-Set Mortar: Latex-portland cement mortar.
    c. Grout: Epoxy grout in compliance with ANSI 118.3.

B. Interior Floor Installations, Concrete Subfloor
    1. Tile Installation: Thin-set mortar on waterproof membrane; TCA F122-19.
        a. Tile Type: As indicated on drawings for each location.
        b. Thin-Set Mortar: Latex-portland cement mortar.
        c. Grout: Polymer-modified unsanded grout.

END OF SECTION 093013

SECTION 094020 - RESINOUS MATRIX TERRAZZO FLOORING

PART 1 - GENERAL

1.1 RELATED DOCUMENTS

A. Drawings and general provisions of the Contract, including General and Supplementary Conditions and Division 1 Specification Sections, apply to this Section.

1.2 SUMMARY

A. Section Includes:

1. Thin-set, epoxy-resin terrazzo flooring and base.

B. Related Requirements:

1. Division 7 Section "Joint Sealants" for sealants installed with terrazzo.

1.3 DEFINITIONS

A. Aggregate: Marble chips or other types of aggregate.

1.4 PREINSTALLATION MEETINGS

A. Preinstallation Conference: Conduct conference at Project site.

1. Review methods and procedures related to terrazzo including, but not limited to, the following:

a. Inspect and discuss condition of substrate and other preparatory work performed by other trades.
b. Review and finalize construction schedule and verify availability of materials, Installer's personnel, equipment, and facilities needed to make progress and avoid delays.
c. Review special terrazzo designs and patterns.

1.5 ACTION SUBMITTALS

A. Product Data: For each type of product.

B. Shop Drawings: Include terrazzo installation requirements. Include plans, elevations, sections, component details, and attachments to other work. Show layout of the following:

1. Divider strips.
2. Control-joint strips.
3. Accessory strips.
4. Terrazzo patterns.

C. Samples for Initial Selection: NTMA color plates showing the full range of colors and patterns available for each terrazzo type.

D. Samples for Verification: For each type, material, color, and pattern of terrazzo and accessory required showing the full range of color, texture, and pattern variations expected. Label each terrazzo sample to identify manufacturer's matrix color and aggregate types, sizes, and proportions. Prepare Samples of same thickness and from same material to be used for the Work, in size indicated below:

1. Terrazzo: 12-inch- square Samples.
2. Accessories: 12-inch- long Samples of each exposed strip item required.

1.6 INFORMATIONAL SUBMITTALS

A. Qualification Data: For Installer.

1.7 CLOSEOUT SUBMITTALS

A. Maintenance Data: For terrazzo to include in maintenance manuals.

1.8 QUALITY ASSURANCE

A. Installer Qualifications:

1. Engage an installer who is a contractor member of NTMA.
2. Engage an installer who is certified in writing by terrazzo manufacturer as qualified to install manufacturer's products.

B. Source Limitations: Obtain primary terrazzo materials from single source from single manufacturer. Provide secondary materials including patching and fill material, joint sealant, and repair materials of type and from source recommended by manufacturer of primary materials.

C. Source Limitations for Aggregates: Obtain each color, grade, type, and variety of granular materials from single source with resources to provide materials of consistent quality in appearance and physical properties.

D. Mockups: Build mockups to verify selections made under Sample submittals and to demonstrate aesthetic effects and set quality standards for materials and execution.

1. Build mockups for terrazzo including accessories.

a. Size: Minimum 100 sq. ft. of typical poured-in-place flooring and base condition for each color and pattern in locations directed by Architect.
b. Include base.

2. Approval of mockups does not constitute approval of deviations from the Contract Documents contained in mockups unless Architect specifically approves such deviations in writing.

1.9 DELIVERY, STORAGE, AND HANDLING

A. Deliver materials to Project site in supplier's original wrappings and containers, labeled with source's or manufacturer's name, material or product brand name, and lot number if any.

B. Store materials in their original, undamaged packages and containers, inside a well-ventilated area protected from weather, moisture, soiling, extreme temperatures, and humidity.

1.10 FIELD CONDITIONS

A. Environmental Limitations: Comply with manufacturer's written instructions for substrate temperature, ambient temperature, moisture, ventilation, and other conditions affecting terrazzo installation.

B. Provide permanent lighting or, if permanent lighting is not in place, simulate permanent lighting conditions during terrazzo installation.

C. Close spaces to traffic during terrazzo application and for not less than 24 hours after application unless manufacturer recommends a longer period.

D. Control and collect water and dust produced by grinding operations. Protect adjacent construction from detrimental effects of grinding operations.

PART 2 - PRODUCTS

2.1 PERFORMANCE REQUIREMENTS

A. NTMA Standards: Comply with NTMA's "Terrazzo Specifications and Design Guide" and with written recommendations for terrazzo type indicated unless more stringent requirements are specified.

2.2 EPOXY-RESIN TERRAZZO

A. Epoxy-Resin Terrazzo (**TER-1 & TRB-1)**: Comply with NTMA's "Terrazzo Specifications and Design Guide" and manufacturer's written instructions for matrix and aggregate proportions and mixing.

1. Products: Subject to compliance with requirements, available products that may be incorporated into the Work include, but are not limited to, the following:
   a. Basis of Design - Terrazzo & Marble Supply Companies;
      1) TER-1 (floor and Base) shall consist of the following components:
         - **Epoxy: SW7018 Dove Tail**
         - **35% Black Stallion #0,1 (marble)**
         - **35% Gun Metal #0,1 (marble)**
         - **10% Mocha #0,1 (marble)**
         - **20% Classic Mother of Pearl #2**
   b. General Polymers Corporation; Terrazzo 1100.
   c. Key Resin Company; Key Epoxy Terrazzo.
   d. Polymerica Inc.; MasterPiece Epoxy Terrazzo Surfacing (ETS)

2. Thickness: 3/8 inch nominal.
3. Formulated Mix Color and Pattern: As selected by Architect from full range of industry colors.

B. Materials:

1. Flexible Reinforcing Membrane: Manufacturer's resinous membrane for substrate-crack preparation and reflective-crack reduction beneath all new terrazzo.

   a. Reinforcement: Fiberglass scrim.

2. Primer: Manufacturer's product recommended for substrate and use indicated
3. Epoxy-Resin Matrix: Manufacturer's standard recommended for use indicated and in color required for mix indicated.

   a. Physical Properties without Aggregates:

      1) Hardness: 60 to 85 per ASTM D 2240, Shore D.
      2) Minimum Tensile Strength: 3000 psi per ASTM D 638 for a 2-inch specimen made using a "C" die per ASTM D 412.
      3) Minimum Compressive Strength: 10,000 psi per ASTM D 695, Specimen B cylinder.
      4) Chemical Resistance: No deleterious effects by contaminants listed below after seven-day immersion at room temperature per ASTM D 1308.

         a) Distilled water.
         b) Mineral water.
         c) Isopropanol.
         d) Ethanol.
         e) 0.025 percent detergent solution.
         f) 1.0 percent soap solution.
         g) 10 percent sodium hydroxide.
         h) 10 percent hydrochloric acid.
         i) 30 percent sulfuric acid.
         j) 5 percent acetic acid.

b. Physical Properties with Aggregates: For resin blended with Georgia white marble, ground, grouted, and cured per requirements in NTMA's "Terrazzo Specifications and Design Guide"; comply with the following:

1) Flammability: Self-extinguishing, maximum extent of burning 1/4 inch per ASTM D 635.
2) Thermal Coefficient of Linear Expansion: 0.0025 inch/inch per deg F for temperature range of minus 12 to plus 140 deg F per ASTM D 696.

4. Aggregates: Comply with NTMA gradation standards for mix indicated and contain no deleterious or foreign matter.

a. Abrasion and Impact Resistance: Less than 40 percent loss per ASTM C 131.
b. 24-Hour Absorption Rate: Less than 0.75 percent.
c. Dust Content: Less than 1.0 percent by weight.
d. Recycled Content of Epoxy-Resin Terrazzo: Postconsumer recycled content plus one-half of preconsumer recycled content not less than 20 percent.

5. Finishing Grout: Resin based.

2.3 STRIP MATERIALS

A. Thin-Set Divider Strips: L-type angle, 3/8 inch deep.

1. Material: Aluminum.
2. Top Width: 1/8 inch.

B. Control-Joint Strips: Separate, double L-type angles, positioned back to back, that match material and color of divider strips and in depth required for topping thickness indicated.

C. Accessory Strips: Match divider-strip width, material, and color unless otherwise indicated. Use the following types of accessory strips as required to provide a complete installation:

1. Base-bead strips for exposed top edge of terrazzo base.
2. Edge-bead strips for exposed edges of terrazzo.

2.4 MISCELLANEOUS ACCESSORIES

A. Strip Adhesive: Epoxy-resin adhesive recommended by adhesive manufacturer for this use.
1. Adhesives shall have a VOC content of 70 g/L or less when calculated according to 40 CFR 59, Subpart D (EPA Method 24).

B. Anchoring Devices:

1. Strips: Provide mechanical anchoring devices or adhesives for strip materials as recommended by manufacturer and required for secure attachment to substrate.

C. Patching and Fill Material: Terrazzo manufacturer's resinous product approved and recommended by manufacturer for application indicated.

D. Resinous Matrix Terrazzo Cleaner: Chemically neutral cleaner with pH factor between 7 and 10 that is biodegradable, phosphate free, and recommended by sealer manufacturer for use on terrazzo type indicated.

E. Sealer: Slip- and stain-resistant, penetrating-type sealer that is chemically neutral; does not affect terrazzo color or physical properties; is recommended by sealer manufacturer; and complies with NTMA's "Terrazzo Specifications and Design Guide" for terrazzo type indicated.

1. Surface Friction: Not less than 0.6 according to ASTM D 2047.
2. Acid-Base Properties: With pH factor between 7 and 10.
3. Sealers shall have a VOC content of 200 g/L or less when calculated according to 40 CFR 59, Subpart D (EPA Method 24).

PART 3 - EXECUTION

3.1 EXAMINATION

A. Examine substrates and areas, with Installer present, for compliance with requirements for installation tolerances and other conditions affecting performance of the Work.

B. Proceed with installation only after unsatisfactory conditions, including levelness tolerances, have been corrected.

3.2 PREPARATION

A. Clean substrates of substances, including oil, grease, and curing compounds, that might impair terrazzo bond. Provide clean, dry, and neutral substrate for terrazzo application.

B. Concrete Slabs:

1. Provide sound concrete surfaces free of laitance, glaze, efflorescence, curing compounds, form-release agents, dust, dirt, grease, oil, and other contaminants incompatible with terrazzo.

    a. Shot-blast surfaces with an apparatus that abrades the concrete surface, contains the dispensed shot within the apparatus, and recirculates the shot by vacuum pickup.
    b. Repair damaged and deteriorated concrete according to terrazzo manufacturer's written recommendations.
    c. Use patching and fill material to fill holes and depressions in substrates according to terrazzo manufacturer's written instructions.

C. Verify that concrete substrates are dry and moisture-vapor emissions are within acceptable levels according to manufacturer's written instructions.

1. Moisture Testing: Perform tests indicated below.
   a. Test Method: Test for moisture content by method recommended in writing by terrazzo manufacturer. **Proceed with installation only after substrates pass testing.**

D. Protect other work from water and dust generated by grinding operations. Control water and dust to comply with environmental protection regulations.

1. Erect and maintain temporary enclosures and other suitable methods to limit water damage and dust migration and to ensure adequate ambient temperatures and ventilation conditions during installation.

3.3 EPOXY-RESIN TERRAZZO INSTALLATION

A. Comply with NTMA's written recommendations for terrazzo and accessory installation.

B. Place, rough grind, grout, cure grout, fine grind, and finish terrazzo according to manufacturer's written instructions and NTMA's "Terrazzo Specifications and Design Guide."

C. Installation Tolerance: Limit variation in terrazzo surface from level to 1/4 inch in 10 feet; noncumulative.

D. Ensure that matrix components and fluids from grinding operations do not stain terrazzo by reacting with divider and control-joint strips.

E. Delay fine grinding until heavy trade work is complete and construction traffic through area is restricted.

F. Flexible Reinforcing Membrane:

1. Prepare and prefill substrate cracks with membrane material.
2. Install membrane to produce full substrate coverage in areas to receive terrazzo.
3. Reinforce membrane with fiberglass scrim.
4. Prepare membrane according to manufacturer's written instructions before applying substrate primer.

G. Primer: Apply to terrazzo substrates according to manufacturer's written instructions.

H. Strip Materials:

1. Divider and Control-Joint Strips:

   a. Locate divider strips in locations indicated.
   b. Install control-joint strips back to back directly above concrete-slab control joints.

c. Install control-joint strips with 1/4-inch gap between strips, and install sealant in gap.
d. Install strips in adhesive setting bed without voids below strips, or mechanically anchor strips as required to attach strips to substrate, as recommended by strip manufacturer.
e. The divider strips as currently shown delineate where color changes occur. Provide and install additional divider strips in strict accordance with industry recommendations. Provide a shop drawing for review and approval of architect.

2. Accessory Strips: Install as required to provide a complete installation.

3.4 REPAIR

A. Cut out and replace terrazzo areas that evidence lack of bond with substrate. Cut out terrazzo areas in panels defined by strips and replace to match adjacent terrazzo, or repair panels according to NTMA's written recommendations, as approved by Architect.

3.5 CLEANING AND PROTECTION

A. Cleaning:

1. Remove grinding dust from installation and adjacent areas.
2. Wash surfaces with cleaner according to NTMA's written recommendations and manufacturer's written instructions; rinse surfaces with water and allow them to dry thoroughly.

B. Sealing:

1. Seal surfaces according to NTMA's written recommendations.
2. Apply sealer according to sealer manufacturer's written instructions.

C. Protection: Provide final protection and maintain conditions, in a manner acceptable to Installer, that ensure that terrazzo is without damage or deterioration at time of Substantial Completion.

END OF SECTION 094020

SECTION 095113 - ACOUSTICAL PANEL CEILINGS

PART 1 - GENERAL

1.1 RELATED DOCUMENTS

A. Drawings and general provisions of the Contract, including General and Supplementary Conditions and Division 01 Specification Sections, apply to this Section.

1.2 SUMMARY

A. Section includes acoustical panels and exposed suspension systems for interior ceilings.

B. Products furnished, but not installed under this Section, include anchors, clips, and other ceiling attachment devices to be cast in concrete.

1.3 ACTION SUBMITTALS

A. Product Data: For each type of product.

B. Samples: For each exposed product and for each color and texture specified, 6 inches (150 mm) in size.

C. Samples for Verification: For each component indicated and for each exposed finish required, prepared on Samples of sizes indicated below:

1. Acoustical Panels: Set of 6-inch- (150-mm-) square Samples of each type, color, pattern, and texture.
2. Exposed Suspension-System Members, Moldings, and Trim: Set of 6-inch- (150-mm-) long Samples of each type, finish, and color.
3. Clips: Full-size impact clips.

1.4 CLOSEOUT SUBMITTALS

A. Maintenance Data: For finishes to include in maintenance manuals.

1.5 MAINTENANCE MATERIAL SUBMITTALS

A. Furnish extra materials, from the same product run, that match products installed and that are packaged with protective covering for storage and identified with labels describing contents.

1. Acoustical Ceiling Units: Full-size panels equal to 2 percent of quantity installed.

2. Suspension-System Components: Quantity of each exposed component equal to 1 percent of quantity installed.
3. Hold-Down Clips: Equal to 1 percent of quantity installed.
4. Impact Clips: Equal to 1 percent of quantity installed.

1.6 DELIVERY, STORAGE, AND HANDLING

A. Deliver acoustical panels, suspension-system components, and accessories to Project site and store them in a fully enclosed, conditioned space where they will be protected against damage from moisture, humidity, temperature extremes, direct sunlight, surface contamination, and other causes.

B. Before installing acoustical panels, permit them to reach room temperature and a stabilized moisture content.

1.7 FIELD CONDITIONS

A. Environmental Limitations: Do not install acoustical panel ceilings until spaces are enclosed and weathertight, wet-work in spaces is complete and dry, work above ceilings is complete, and ambient temperature and humidity conditions are maintained at the levels indicated for Project when occupied for its intended use.

PART 2 - PRODUCTS

2.1 MANUFACTURERS

A. Source Limitations: Obtain each type of acoustical ceiling panel and its supporting suspension system from single source from single manufacturer.

2.2 ACOUSTICAL PANELS

A. Manufacturers and Products: Refer to schedule at end of this specification section.

B. Acoustical Panel Standard: Provide manufacturer's standard panels according to ASTM E 1264 and designated by type, form, pattern, acoustical rating, and light reflectance unless otherwise indicated.

2.3 METAL SUSPENSION SYSTEM

A. Manufacturers: Subject to compliance with requirements, provide products by one of the following:
   1. Refer to “Finish Legend” included in drawings.

B. Metal Suspension-System Standard: Provide manufacturer's standard, direct-hung, metal suspension system and accessories according to ASTM C 635/C 635M and designated by type, structural classification, and finish indicated.

2.4 ACCESSORIES

A. Attachment Devices: Size for five times the design load indicated in ASTM C 635/C 635M, Table 1, "Direct Hung," unless otherwise indicated. Comply with seismic design requirements.

1. Power-Actuated Fasteners in Concrete: Fastener system of type suitable for application indicated, fabricated from corrosion-resistant materials, with clips or other accessory devices for attaching hangers of type indicated and with capability to sustain, without failure, a load equal to **10** times that imposed by ceiling construction, as determined by testing according to ASTM E 1190, conducted by a qualified testing and inspecting agency.

B. Wire Hangers, Braces, and Ties: Provide wires as follows:

1. Zinc-Coated, Carbon-Steel Wire: ASTM A 641/A 641M, Class 1 zinc coating, soft temper.
2. Size: Wire diameter sufficient for its stress at three times hanger design load (ASTM C 635/C 635M, Table 1, "Direct Hung") will be less than yield stress of wire, but not less than 0.135-inch- (3.5-mm-) diameter wire.

C. Impact Clips: Manufacturer's standard impact-clip system designed to absorb impact forces against acoustical panels.

PART 3 - EXECUTION

3.1 EXAMINATION

A. Examine substrates, areas, and conditions, including structural framing to which acoustical panel ceilings attach or abut, with Installer present, for compliance with requirements specified in this and other Sections that affect ceiling installation and anchorage and with requirements for installation tolerances and other conditions affecting performance of acoustical panel ceilings.

B. Examine acoustical panels before installation. Reject acoustical panels that are wet, moisture damaged, or mold damaged.

C. Proceed with installation only after unsatisfactory conditions have been corrected.

3.2 PREPARATION

A. Measure each ceiling area and establish layout of acoustical panels to balance border widths at opposite edges of each ceiling. Avoid using less-than-half-width panels at

borders unless otherwise indicated, and comply with layout shown on reflected ceiling plans.

B. Layout openings for penetrations centered on the penetrating items.

3.3 INSTALLATION

A. Install acoustical panel ceilings according to ASTM C 636/C 636M, and manufacturer's written instructions.

B. Suspend ceiling hangers from building's structural members and as follows:

1. Install hangers plumb and free from contact with insulation or other objects within ceiling plenum that are not part of supporting structure or of ceiling suspension system.
2. Where width of ducts and other construction within ceiling plenum produces hanger spacings that interfere with location of hangers at spacings required to support standard suspension-system members, install supplemental suspension members and hangers in form of trapezes or equivalent devices.
3. Secure wire hangers to ceiling-suspension members and to supports above with a minimum of three tight turns. Connect hangers directly to structure or to inserts, eye screws, or other devices that are secure and appropriate for substrate and that will not deteriorate or otherwise fail due to age, corrosion, or elevated temperatures.
4. Do not support ceilings directly from permanent metal forms or floor deck. Fasten hangers to cast-in-place hanger inserts, postinstalled mechanical or adhesive anchors, or power-actuated fasteners that extend through forms into concrete.
5. When steel framing does not permit installation of hanger wires at spacing required, install carrying channels or other supplemental support for attachment of hanger wires.
6. Do not attach hangers to steel roof deck. Attach hangers to structural members.
7. Space hangers not more than 48 inches (1200 mm) o.c. along each member supported directly from hangers unless otherwise indicated; provide hangers not more than 8 inches (200 mm) from ends of each member.
8. Size supplemental suspension members and hangers to support ceiling loads within performance limits established by referenced standards.

C. Secure bracing wires to ceiling suspension members and to supports with a minimum of four tight turns. Suspend bracing from building's structural members as required for hangers, without attaching to permanent metal forms, steel deck, or steel deck tabs. Fasten bracing wires into concrete with cast-in-place or postinstalled anchors.

D. Install edge moldings and trim of type indicated at perimeter of acoustical ceiling area and where necessary to conceal edges of acoustical panels.

1. Apply acoustical sealant in a continuous ribbon concealed on back of vertical legs of moldings before they are installed.

2. Screw attach moldings to substrate at intervals not more than 16 inches (400 mm) o.c. and not more than 3 inches (75 mm) from ends. Miter corners accurately and connect securely.
3. Do not use exposed fasteners, including pop rivets, on moldings and trim.

E. Install suspension-system runners so they are square and securely interlocked with one another. Remove and replace dented, bent, or kinked members.

F. Install acoustical panels with undamaged edges and fit accurately into suspension-system runners and edge moldings. Scribe and cut panels at borders and penetrations to provide precise fit.

1. Arrange directionally patterned acoustical panels as follows:
   a. Install panels with pattern running in one direction parallel to axis of space.

2. For square-edged panels, install panels with edges fully hidden from view by flanges of suspension-system runners and moldings.
3. For reveal-edged panels on suspension-system runners, install panels with bottom of reveal in firm contact with top surface of runner flanges.
4. For reveal-edged panels on suspension-system members with box-shaped flanges, install panels with reveal surfaces in firm contact with suspension-system surfaces and panel faces flush with bottom face of runners.
5. Paint cut edges of panel remaining exposed after installation; match color of exposed panel surfaces using coating recommended in writing for this purpose by acoustical panel manufacturer.
6. Install impact clips in areas indicated (gymnasiums and related support spaces); space according to panel manufacturer's written instructions unless otherwise indicated.

3.4 CLEANING

A. Clean exposed surfaces of acoustical panel ceilings, including trim, edge moldings, and suspension-system members. Comply with manufacturer's written instructions for cleaning and touchup of minor finish damage.

B. Remove and replace ceiling components that cannot be successfully cleaned and repaired to permanently eliminate evidence of damage.

3.5 ACOUSTICAL PANEL CEILING SCHEDULE

A. Refer to Finish Legend on drawings.

END OF SECTION 095113

SECTION 095400 – INTEGRATED CEILING ASSEMBLIES

PART 1 – GENERAL

1.1 RELATED DOCUMENTS

Drawings and general conditions of Contract, including General and Supplementary Conditions and Divisions-1 Specification sections apply to work of this section.

1.2 SUMMARY

a) Section Includes

1) Acoustical ceiling panel

2) Wire hangers, fasteners, main runners, cross tees, and wall angle moldings

3) Perimeter Trim

b) Related Sections

1) Section 09 22 16 - Non-Structural Metal Framing

c) Alternates

1) Prior Approval: Unless otherwise provided for in the Contract documents, submit proposed product substitutions in accordance with section 012500 Substitution Procedures. Acceptability of a proposed substitution is contingent upon the Architect's review and acceptance. Approved products will be set forth by the Addenda. If a substitution is included in a Bid and is not approved by an Addendum, the specified products shall be provided as in place of the substitute without additional compensation.

2) Submittals that do not provide adequate data for the product evaluation will not be considered. The proposed substitution must meet all requirements of this section, including but not necessarily limited to, the following: Single source materials suppliers (if specified in Section 1.5); Underwriters' Laboratories Classified Acoustical performance; Panel design, size, composition, color, and finish; Suspension system component profiles and sizes; Compliance with the referenced standards.

1.3 REFERENCES

a) American Society for Testing and Materials (ASTM):

1) ASTM A 1008 Standard Specification for Steel, Sheet, Cold Rolled, Carbon, Structural, High-Strength Low-Alloy and High-Strength Low-Alloy with Improved Formability

2) ASTM A 641 Standard Specification for Zinc-Coated (Galvanized) Carbon Steel Wire

3) ASTM A 653 Standard Specification for Steel Sheet, Zinc-Coated (Galvanized) by the Hot-Dip Process

4) ASTM C 645 Standard Specification for Metal Suspension Systems

5) ASTM C 636 Recommended Practice for Installation of Metal Ceiling Suspension Systems for Acoustical Tile and Lay-in Panels

6) ASTM C754 AND C1858 All installations should be in compliance with these tests.

7) ASTM D 3273 Standard Test Method for Resistance to Growth of Mold on the Surface of Interior Coatings in an Environmental Chamber

8) ASTM E 84 Standard Test Method for Surface Burning Characteristics of Building Materials

9) ASTM E 580 Installation of Metal Suspension Systems in Areas Requiring Moderate Seismic Restraint

10) ASTM C 423 Sound Absorption and Sound Absorption Coefficients by the Reverberation Room Method

11) ASTM E 1414 Standard Test Method for Airborne Sound Attenuation between Rooms Sharing a Common Ceiling Plenum

12) ASTM E 1264 Classification for Acoustical Ceiling Products

13) ASTM E3090 All references to suspension component property testing per this test method.

b) B. International Building Code

c) C. ASHRAE Standard 62.1-2004, Ventilation for Acceptable Indoor Air Quality

d) D. NFPA 70 National Electrical Code

e) E. ASCE 7 American Society of Civil Engineers, Minimum Design Loads for Buildings and Other Structures

f) International Code Council-Evaluation Services - AC 156 Acceptance Criteria for Seismic Qualification Testing of Non-structural Components

g) International Code Council-Evaluation Services Report - Seismic Engineer Report

a. 1. ESR 1289 - Armstrong Suspension Systems

Continuous/Wall-to-Wall or Cloud installation

1.5 SUBMITTALS

a) Shop Drawings: Layout and details of ceilings. Show locations of items that are to be coordinated with, or supported by the ceilings.

b) Installation Instructions: Submit manufacturer's installation instructions as referenced in Part three, Installation.

c) Product Data: Submit manufacturer's technical data for each type of ceiling unit and suspension system required.

d) Samples: Minimum 6 x 6 inch samples of specified panel; 8 inch long samples of exposed wall molding and suspension system, including main runner and 4 foot cross tees.

e) Certifications: Manufacturer's certifications that products comply with specified requirements, including laboratory reports showing compliance with specified tests and standards.

f) Non-Conformance: All products not conforming to the requirements of this specification and or the manufacturer's published values are to be disposed. The Contractor performing the work will replace with approved product at their expense.

1.6 QUALITY ASSURANCE

a) Single-Source Responsibility: Provide acoustical panel units and grid components by a single manufacturer.

b) Fire Performance Characteristics: Identify acoustical ceiling components with appropriate markings of applicable testing and inspecting organization.

c) Surface Burning Characteristics: As follows, tested per ASTM E 84 and complying with ASTM E 1264 Classification.

d) Acoustical Panels: As with other architectural features located at the ceiling that may obstruct or skew the planned fire sprinkler pattern through possibly delay or accelerate the activation of the sprinkler or fire detection systems by channeling heat from a fire either toward or away from the device. Designers and installers are advised to consult a fire protection engineer, NFPA 13, or their local codes for guidance where automatic fire detection and suppression systems are present.

e) Coordination of Work: Coordinate acoustical ceiling work with installers of related work including, but not limited to building insulation, gypsum board, light fixtures, mechanical systems, electrical systems, and sprinklers.

f) Installer Qualification: Subcontractor is an experienced Installer that has reviewed and understands the system installation instructions thoroughly. Subcontractor will follow written installation instructions and utilize approved equipment and procedures for finishing installation.

1.7 DELIVERY, STORAGE AND HANDLING

a) Deliver acoustical ceiling units to project site in original, unopened packages/crates and store them in a fully enclosed space where they will be protected against damage from moisture, direct sunlight, surface contamination, and other causes.

b) Before installing acoustical ceiling units, permit them to reach room temperature and a stabilized moisture content. Store all material within temperature limits required by manufacturer.

c) Handle acoustical ceiling units carefully to avoid chipping edges or damaged units in any way.

1.9 PROJECT CONDITIONS

a) Space Enclosure:

1) Building areas to receive ceilings shall be free of construction dust and debris. Panels should be installed in areas where the building is enclosed and the HVAC is continuously functioning. This product is not recommended for exterior applications, where standing water is present, or where moisture will come into direct contact with the ceiling.

i. HVAC should be designed, installed, and operated in accordance with ASHRAE Standard 62.1. It is also necessary for the area to be enclosed, for the HVAC systems to be functioning, and in continuous operations for the life of the product. Product is not intended for use where natural ventilation is part of the ventilation strategy and not recommended in areas where a differential plenum pressure exists.

1.10 WARRANTY

a) Acoustical Panel: Submit a written warranty executed by the manufacturer, agreeing to repair or replace panels that fail within the warranty period. Failures include, but are not limited to the following:

a. Acoustical Panels: Manufacturer's defects in material

b. Grid System: Rusting and manufacturer's defects

b) Warranty Period:

a. Acoustical panels: Ten (10) years from date of substantial completion

b. Suspension: Ten (10) years from date of substantial completion

c) The Warranty shall not deprive the Owner of other rights the Owner may have under other provisions of the Contract Documents and will be in addition to and run concurrent with other warranties made by the Contractor under the requirements of the Contract Documents.

PART 2 - PRODUCTS

2.1 MANUFACTURERS

a) Basis of Design: ACOUSTIBuilt by Armstrong

b) Ensemble Acoustical Drywall Ceiling-Suspended System by USG

2.2 Finish

a) Joint Compound by panel Manufacturer.

b) Spray Applied Finish by panel Manufacturer.

c) Color: White

2.3 Suspension Systems: standard suspension system by panel Manufacturer.

2.4 Perimeter Trim Systems

2.5 ACOUSTICAL CEILING UNITS

a) Acoustical Panels

1) Surface Texture: Fine

2) Composition: Mineral Fiber

3) Color: As indicated on drawings

Custom Colors: Greater than LRV 0.70

4) Size: As indicated on drawings

5) Edge Profile: Tapered edges four sides

6) Noise Reduction Coefficient (NRC): ASTM C 423; Panel 0.80 (UL)

7) Ceiling Attenuation Class (CAC): ASTM C 1414; Panel 46 (UL), System up to 48

8) Sabin: Cloud Applications: 0.80 Sabins/SF & 1.33 Sabins/SF with infill item 8200T10

9) Flame Spread: ASTM E 1264; Class A

10) Light Reflectance (LR) White Panel: ASTM E 1477; 0.87

11) Dimensional Stability: HumiGuard Plus

12) Recycle Content: Post-Consumer and Pre-Consumer – up to 75%

13) Material Ingredient Transparency: Health Product Declaration (HPD); Declare Label

14) Contact your local Armstrong Representative for required installation training at least 4-6 weeks before ordering materials and scheduling installation.

b) Finish

1. Joint Compound

a. Setting Compound: Lightweight setting-type drywall joint compound, Ultra lightweight drying-type drywall joint compound

b. Joint Tape: Self-Adhesive mesh drywall joint tape (Panel to Panel)

1. Use Setting Type Compound for initial coats and use Drying Type Compound for final coats per the installation instructions. DO NOT use any other type of drywall compound such as All-Purpose Compound.

2. Paper tape at the wall intersection

2. Spray Applied Finish

a. #2605WH Fine Texture Finish for ACOUSTIBuilt panels – White as manufactured by Armstrong World Industries.

b. USG Ensemble Spray-Applied Finish; Finish: Fine; Color: White

c) Suspension Systems

1. Drywall Suspension System by panel Manufacturer

2. Cross Tees: manufactured cross tee by panel Manufacturer.

3. Hanger wire: a Class 1 zinc coating, soft temper, pre-stretched, with a yield stress load of at least time three times the design load, but not less than 12-gauge.

4. Fasteners (for Panel attachment)

i. #6 x 1-5/8" Fine thread drywall screws or as required by panel Manufacturer.

ii. Loctite PL Premium Polyurethane Construction Adhesive, OSI F38 Drywall Panel Adhesive or as required by panel Manufacturer.

5. Perimeter Systems

i. Commercial quality extruded aluminum alloy 6063 trim channel, factory finished in baked polyester paint. Commercial quality galvanized steel unfinished T-bar connection clips; galvanized steel splice plates. All trim components by panel ceiling manufacturer.

1. Color: White

2. Size: 120 in X 4 in (also available in 6")

3. Acceptable Products:

a. AXIOM One Piece for Drywall, 4in Straight – AX1PC4STR as manufactured by Armstrong World Industries

b. USG Compasso Elite, height: 4"

PART 3 – EXECUTION

a) Prior to installation, contact ceiling manufacturer. Before installation, inspect previous work of all other trades. Verify that all work is complete and accurate to the point where this installation may properly proceed in strict accordance with framing shop drawings.

b) If framing preparation is the responsibility of another installer, notify Architect of unsatisfactory preparation before proceeding.

c) The system installation is similar to a conventional drywall installation. However, there are key differences in both material substrate and methods of finishing and installation that make this system unique. Installers should review and follow all written directions of the installation instructions by the ceiling manufacturer.

d) Installation: In accordance with all approved plans, details, and manufacturer's installation guidelines.

a) Do not proceed with installation until all wet work such as concrete, terrazzo, plastering and painting has been completed and thoroughly dried out, unless expressly permitted by manufacturer's printed recommendations.

b) Coordination: Furnish layouts for preset inserts, clips, and other ceiling anchors whose installation is specified in other sections.

c) Furnish concrete inserts and similar devices to other trades for installation well in advance of time needed for coordination of other work.

3.1 INSTALLATION

Follow manufacturer installation instructions.

A. Control joints are required following the standards used for gypsum board listed in ASTM C840, Section 20

   I. Ceilings with perimeter relief cannot exceed 50 LF and 2500 SF between control joints

   II. Ceilings without perimeter relief cannot exceed 30 LF and 900 SF between control joints

B. Panel joints and fasteners are finished with tape and compound to create a flat surface. While the materials used to finish panels are also used to finish drywall, the procedure has unique requirements.

C. Joint compound coverage shall be limited to preserve the acoustical performance of the panels. Compound at panel joints shall not exceed 8 inch widths. Compound applied to field fasteners shall not exceed 2 inch by 2-inch areas. All compound shall be smooth and free of tool marks and ridges. Panels are to be finished with taping knives. Production tools, including boxes, are detailed on the installation instructions.

D. Sanding and inspection: Throughout the sanding process, inspect the surface frequently for flatness. Direct a light across the ceiling to highlight unevenness that requires attention.

E. Fine Texture Finish shall be applied as required by panel manufacturer in the installation instructions. Finish to be applied in multiple coats, layered to achieve a uniform appearance and acoustical performance.

3.2 ADJUSTING AND CLEANING

a) To remove soot, dirt, and dust use a vacuum operating at low power with a soft brush or use a dry soot cleaning sponge.

b) Clean exposed surfaces of acoustical ceilings, including trim, edge moldings, and suspension members. Comply with manufacturer's instructions for cleaning and touch up of minor finish damage.

END OF SECTION 095400

SECTION 095423 – LINEAR METAL CEILINGS

PART 1 - GENERAL

1.01 RELATED DOCUMENTS

A. Drawings and general provisions of the Contract, including General and Supplementary Conditions and Division 01 Specification Sections, apply to this Section.

1.02 SUMMARY

A. Section includes the following:
   1. Linear metal panels for interior ceilings and exterior enclosed soffits.
   2. Suspended metal support system and perimeter trim
   3. Supplementary acoustical insulation over system.

1.03 REFERENCES

A. Definitions:
   1. NRC: Noise Reduction Coefficient.

1.04 ADMINSTRATIVE REQUIREMENTS

A. Preinstallation Meetings: Conduct at Project site minimum prior to purchasing materials for mock-up.

B. Coordination: Coordinate layout and installation of linear metal panels and suspension system with other construction that penetrates ceilings or is supported by them, including partition assemblies, fire-suppression system, HVAC equipment and light fixtures.

1.05 ACTION SUBMITTALS

A. Product Data: For each type of product including linear panel profiles, suspension members, perimeter and integral trim, and accessories required to provide a complete installation.

B. Shop Drawings: Indicate reflected ceiling plan,
   1. Show overall and end joint pattern and joint locations, penetrating mechanical and electrical components with edge details, perimeter details at junction with walls, columns, and other structures, trim and molding details, and details at dissimilar materials.
   2. Seismic Design: Include seal and signature of design professional on each drawing.
   3. Mockup Drawings: Provide plans, sections, and elevations, indicating materials and size of mockup construction.
      a. Indicate manufacturer and model number of individual components.
      b. Provide axonometric drawings for conditions difficult to illustrate in two dimensions.

C. Coordination Drawings: In accordance with Division 01 Section and including the following:
   1. Locations of fire suppression, plumbing, HVAC, electrical lighting, speakers, and other devices and components penetrating ceilings.
   2. Points of suspension showing relationship to above ceiling ductwork and pother obstructions.
   3. Minimum Drawing Scale: 1/4 inch = 1 foot (1:50).

D. Samples: For each type and color of the following exposed products for initial selection and again for verification.
   1. Sample Size: 12 inches (300 mm) in length for the following:
      a. Linear metal panels. Include a spliced section.
      b. Suspension system members.
      c. Exposed molding and trim.
      d. Reveal/filler strips.
   2. Acoustical backer.
   3. End caps.

1.06 INFORMATIONAL SUBMITTALS

A. Delegated-design submittal for design of seismic restraints and attachment devices. Include design calculations for products indicated to comply with seismic and other design loads for which design is assigned to Contractor.

B. Test and Evaluation Reports: As follows:
   1. Product test reports.
   2. Evaluation reports for linear metal ceiling and components and anchor type.

C. Field quality-control reports for hangers, anchors, and fasteners.

1.07 CLOSEOUT SUBMITTALS

A. Maintenance data.

1.08 QUALITY ASSURANCE

A. Qualifications:
   1. Installer Qualifications: A firm or individual experienced and specializing in installing, applying, or erecting work comparable in material, design, and extent to that indicated for this Project, whose work has resulted in construction with a record of successful in-service performance.
   2. Contractor's Acoustical Testing Agency Qualifications: Qualified according to ISO/IEC 17025, ASTM E329, and ASTM E699 with the experience and capability to conduct testing and inspecting indicated and meeting the following, with additional qualifications specified in individual Sections, and, where required, that is acceptable to authorities having jurisdiction.
   3. Design Professional Qualifications: Professional engineer experienced in providing design and engineering services of the kind indicated and who is licensed or registered in jurisdiction in which Project is located who assumes responsibility for the following:
      a. Preparation of comprehensive seismic design and analysis data.

1) Data may be based on testing and engineering analysis of manufacturer's standard units in assemblies similar to those indicated for this Project, unless otherwise indicated.

b. Preparation of engineering calculations.

c. Preparation of shop drawings and other submittals.

B. Mockups:

1. Field Mockups:
   a. Location: As directed.
   b. Size: 10 feet long by 10 feet wide.
   c. In addition to other requirements, approval of field mockups is for finish, color, and workmanship.
2. Maintain mockups during construction in an undisturbed condition as a standard for judging the completed Work.

1.09 DELIVERY, STORAGE, AND HANDLING

A. Deliver products to Project site in an undamaged condition in manufacturer's original, undamaged packaging with seals unbroken, complete with labels and instructions for handling, storing, unpacking, protecting, and installing.

B. Protect materials, including finishes, during handling and installation to prevent damage.

1. Protect finishes on exposed metal surfaces from damage by applying a strippable, UV-resistant, temporary protective covering before shipping.
   a. Remove strippable protective coverings prior to installation.
   b. Protect strippable protective covering from exposure to sunlight and high humidity, except to extent necessary for the period of installation.

1.10 FIELD CONDITIONS

A. Ambient Conditions: Do not install interior linear metal ceilings until spaces are enclosed and weathertight, wet work in spaces is complete and dry, work above ceilings is complete, and ambient temperature and humidity conditions are maintained at the levels indicated for Project when occupied for its intended use.

1.11 WARRANTY

A. Manufacturer's Standard Ceiling Product Warranty: Manufacturer agrees to repair or replace components of linear metal ceiling assemblies that fail in materials within specified warranty period. Failures include, but are not limited to, the following:

1. Rusting, corrosion, or other finish failures.
2. Excessive sagging or deflection.
3. Warranty Period: One year from date of Substantial Completion.

PART 2 - PRODUCTS

2.01 MANUFACTURERS

A. Basis of Design Product: Subject to compliance with requirements, provide USG Ceilings Plus® PLANX Universal Linear Metal Panel System by USG Ceilings Plus, LLC.

1. Or equal product by CertainTeed - Box Series – Simulated Wood Finish – Interior and Exterior

B. Single-Source Responsibility: Provide linear metal ceiling assemblies and suspension components through one source from a single manufacturer.

2.02 PERFORMANCE / DESIGN CRITERIA

A. Delegated Design: Professional services are specifically required of Contractor to design seismic restraints and attachment devices. Engage a qualified design professional to design linear metal ceilings, using performance requirements and design criteria specified herein.

B. Structural Performance Requirements: Provide linear metal ceilings, including anchorages, capable of withstanding, without failure, exterior exposure and the effects of gravity loads , earthquake motions and the following loads and stresses within limits and under conditions indicated, without showing permanent deformation of ceiling system components including panels and suspension system; noise or metal fatigue caused by vibration, deflection, and displacement of ceiling units; or permanent damage to fasteners and anchors.
   1. Design to support imposed loads of indicated elements without eccentric loading of supports. Where supported elements may induce rotation of ceiling system components, provide stabilizing reinforcement.
   2. Design Wind Loads: As indicated on Drawings.
   3. Horizontal Deflection: Limited to 1/360 of the unsupported length.
   4. Seismic Criteria: Design and install linear metal ceilings to withstand the effects of earthquake motions according to the following:
      a. ASCE/SEI 7-22, "Minimum Design Loads and Associated Criteria for Buildings and Other Structures."
      b. Comply with ASTM E580/E580M "Standard Practice for Installation of Ceiling Suspension Systems for Acoustical Tile and Lay-in Panels in Areas Subject to Earthquake Ground Motions".
      c. Comply with CISCA's "Seismic Construction Handbook."

C. Surface-Burning Characteristics: Comply with ASTM E 84; testing by a qualified testing agency. Identify products with appropriate markings of applicable testing agency.
   1. Flame-Spread Index: 25 or less.
   2. Smoke-Developed Index: 50 or less.

D. Acoustical Performance Requirements: Provide linear metal ceilings identical to those tested by a qualified testing agency for the following acoustical properties in accordance with test methods indicated:
   1. Noise-Reduction Coefficient (NRC): Identical to linear metal ceilings tested for sound-absorption performance in accordance with ASTM C 423, and rated for not less than NRC indicated.
   2. Mounting Method for Measuring NRC: Type E-400; plenum mounting in which face of test specimen is 15-3/4 inches (400 mm) away from test surface in accordance with ASTM E 795.

E. Thermal Performance Requirements:

1. Provide linear metal ceilings that allow for thermal movements resulting from the following maximum change (range) in ambient and surface temperatures by preventing buckling, opening of joints, overstressing of components, reduction of performance, and other detrimental effects. Base engineering calculation on surface temperatures of materials due to both solar heat gain and nighttime-sky heat loss.

2.03 LINEAR METAL CEILING PANELS

A. Linear metal ceilings consist of factory-formed and -finished linear metal panels or panels and custom suspension system complete with carriers, panel splice sections, acoustic backing, hold down clip, panel security/closure clip, panel end cap, panel retention clips, perimeter U-mold, access panels, hangers, edge moldings and trim, load-resisting struts, fixture adapters, trim, accessories, and other suspension components required to support ceiling units and other ceiling-supported construction and to provide a complete installation.

B. Acoustical Metal Panel Standard: Provide manufacturer's standard linear metal panels of configuration indicated that comply with ASTM E 1264 classifications as designated by types, acoustical ratings, and light reflectances unless otherwise indicated.
   1. Classification: [Type C, Form C1, perforated, metal panels with mineral- or glass-fiber backing.] [Type C, Form C2, non-perforated, metal panels with mineral- or glass-fiber backing.] [Type XX, other types non-perforated, metal panels without backing.] [Type XX, other types [<describe>].]

C. Metal Panels, General: Manufacturer's standard units of size, profile, and edge treatment indicated, formed from metal indicated to snap on and be securely retained on carriers without separate fasteners, and finished to comply with requirements indicated.
   1. Thickness: Not less than 0.032 inch (0.81 mm).
   2. Panel Splices: Construction same as panels, in lengths and manufacturer's standard mill finish.
   3. Perforation Pattern: Round, 0.0625 inch perforations on 45 degree pattern alignment.
      a. NRC: Not less than 0.80.

D. No Reveal Panel Face Width: 6 inch (152.4 mm) panel face width.
   1. Panel Depth: One inch (25.4 mm) deep.

E. Panel Face Finish: Sarante® - PVC-free, dimensionally simulated woodgrain applied to recycled aluminum

F. Panel Accessories:
   1. Panel Splices: Aluminum shapes fabricated to maintain panel alignment at joints.
      a. Finish: Mill finish.
   2. End Caps: Metal caps fabricated to fit and conceal exposed ends of panels.
      a. Finish: Match panels.

2.04 METAL SUSPENSION SYSTEMS

A. Metal Suspension Systems Standard: Provide ceiling manufacturer's custom direct-hung metal suspension system formed to accept panels of types and finishes indicated that comply with applicable requirements in ASTM C 635/C 635M.

B. Attachment Devices: Size for five times the design load indicated in ASTM C 635/C 635M, Table 1, "Direct Hung," unless otherwise indicated. Comply with seismic design requirements.
   1. Postinstalled Anchors in Concrete: Anchors of type and material indicated below, with holes or loops for attaching suspension hangers of type indicated capable of sustaining, without failure, a load equal to 5 times that imposed by ceiling construction, as determined by testing by a qualified testing and inspecting agency in accordance with ASTM E 488 or ASTM E 1512 as applicable.

C. Suspension Hangers, Braces, and Ties: Size components as required by ASTM C754 and by required delegated design.
   1. Wire Hangers: Conform to requirements of ASTM C754 and the following:
      a. Material: Zinc-coated, carbon-steel wire; ASTM A 641/A 641M, Class 1 zinc coating, soft temper.

D. Suspension-System Material: Manufacturer's standard cold-rolled steel sheet, not less than 0.021 inch (0.74 mm) nominal thickness, with factory-applied zinc coating and, where visible in finished assembly, with factory-applied paint finish in matte-black color.

E. Edge Moldings and Trim: Provide manufacturer's standard U-shaped channel wall moldings for perimeter panel edges terminating at walls, and to conceal edges of column penetrations through ceiling, to conceal ends of panels and carriers, for fixture trim and adapters, and for other conditions. Form from metal and finish matching linear metal panels.
   1. For circular penetrations of ceiling, fabricate edge moldings to diameter required to fit penetration exactly.

F. Stabilizer Channels, Tees, and Bars: Manufacturer's standard components for stabilizing main tee carriers at regular intervals and at light fixtures, air-distribution equipment, and other equipment; spaced as standard with manufacturer for use indicated.

G. Seismic Components:
   1. Stabilizer Bars: Manufacturer's standard perimeter stabilizers designed to accommodate seismic forces.
   2. Compression Posts: Provide compression posts, framing or bracing as required to accommodate wind uplift and seismic forces.
   3. Panel Retention Clips: Manufacturer's standard seismic clips designed and spaced to secure panels in place.

H. Panel Retention Clips: Manufacturer's standard clips located as standard with manufacturer.

I. Bracing Channels and Angles for Exterior Locations: Cold-rolled steel, hot-dip galvanized to comply with ASTM A 653/A 653M, G90 coating designation; size and profile as required to withstand wind load.

J. Suspension-System Accessories:
1. Cut Panel Retention Clips: Fabricate to hold cut panels in proper location.
2. Perimeter U-Mold Hold Down Clips: Fabricate to hold cut panels down at wall molding.

2.05 ACOUSTIC MATERIALS

A. Sound-Absorbent, Natural Fiber Insulation: Recycled denim and cotton fibers saturated with a borate fire retardant and treated with an EPA registered fungal inhibitor; black-coated; formaldehyde free; surface-burning characteristics for flame-spread index of 25 or less and smoke-developed index of 50 or less, as determined by testing in accordance with ASTM E 84.
1. Thickness: One inch (25.4 mm).
2. Size to fit concealed surface of panels and bond to panels in the factory with manufacturer's standard adhesive.
3. Basis of Design Product: UltraSorb by USG Ceilings Plus, LLC or equal by Certainteed.

B. Sound-Absorbent Acoustical Fabric: Nonwoven acoustical fabric; surface-burning characteristics for flame-spread index of 25 or less and smoke-developed index of 50 or less, as determined by testing in accordance with ASTM E 84.
1. Size to fit concealed surface of panels for field installation.
2. Color: Black
3. Basis of Design Product: Acoustibond™ by USG Ceilings Plus, LLC or equal by Certainteed.

2.06 MATERIALS

A. Sheet Metal Characteristics: For metal components exposed to view in the completed Work, provide materials with smooth, flat surfaces without blemishes. Do not use materials with exposed pitting, seam marks, roller marks, roughness, stains, or discolorations.
1. Aluminum Sheet: Roll-formed aluminum sheet, complying with ASTM B 209; alloy and temper recommended by aluminum producer and finisher for type of use and finish indicated.

2.07 PANEL FACE FINISH, GENERAL REQUIREMENTS

A. Comply with NAAMM/NOMMA AMP 500 for recommendations for applying and designating finishes.

B. Protect finishes on exposed surfaces from damage by applying a strippable, temporary protective covering before shipping.

C. Appearance of Finished Work: Noticeable variations in same piece are not acceptable. Variations in appearance of adjoining components are acceptable if they are within the range of approved Samples and are assembled or installed to minimize contrast.

2.08 ALUMINUM FINISHES

A. Finish designations prefixed by AA comply with the system established by the Aluminum Association for designating aluminum finishes.

B. Laminated Plastic Wood Grain Patterned Color Finish: Manufacturer's Sarante finish comprised of a dimensionally simulated wood grain pattern color printed on a PVC-free plastic blend film which is laminated to the metal sheet.
   1. Color: As selected from manufacturer's full range.

PART 3 - EXECUTION

3.01 EXAMINATION

A. Verification of Conditions:
   1. Examine areas and conditions, including structural framing and substrates to which linear metal ceiling assemblies attach or abut, with installer present, for compliance with requirements for installation tolerances, clearances, and other conditions affecting performance of the Work.
   2. Verify major above-ceiling work is complete. Layout hangers to avoid interfering with other above-ceiling work.
   3. Proceed with installation only after unsatisfactory conditions have been corrected.

3.02 PREPARATION

A. Measure each ceiling area and establish layout of linear metal panels to balance border widths at opposite edges of each ceiling. Avoid using less-than-half-width or less-than-half-length panels at edges, and comply with layout shown on reflected ceiling plans and Coordination Drawings.

B. Coordinate linear metal ceiling assembly layout with fire suppression work, mechanical work, electrical fixtures, and other suspended or permanent construction that penetrates the ceiling.

C. Provide hanger clips during steel deck erection. Provide additional hangers and inserts as required.

3.03 INSTALLATION

A. Install suspension system in accordance with ASTM C 636/C 636M manufacturer's written instructions, and as specified herein.

B. Remove strippable protective covering as metal products are installed, unless otherwise indicated in manufacturer's written installation instructions.

C. Suspend ceiling hangers from building's structural members as follows:
   1. Attach hangers to structural members or to post-installed anchors or power-actuated fasteners that extend through permanent metal forms or floor deck into concrete.
      a. Do not support ceilings directly from permanent metal forms or floor deck.

2. Install carrying channels or other supplemental support, designed to support imposed loads, for attachment of hanger wires in the following locations:
   a. Where spacing of structural members does not permit installation of hanger wires at spacing required.
   b. Where ductwork, equipment, and other non-structural items within ceiling plenum interfere with hanger spacing.
3. Secure bracing wires to ceiling suspension members and to supports with a minimum of four tight turns. Suspend bracing from building's structural members as required for hangers.
4. Secure flat, angle, channel, and rod hangers to structure, including intermediate framing members, by attaching to inserts, eye screws, or other devices that are secure and appropriate for both structure to which hangers are attached and type of hanger involved. Install hangers in a manner that will not cause them to deteriorate or fail due to age, corrosion, or elevated temperatures.
5. Install rigid braces as required to withstand the effects of earthquake motions

D. Install edge moldings and trim of type indicated at perimeter of linear metal ceiling area and where necessary to conceal edges and ends of linear metal panels.
1. Screw attach moldings to substrate at intervals not more than 16 inches o.c. and not more than 3 inches (76 mm) from ends, leveling with ceiling suspension system to a tolerance of 1/8 inch in 12 feet (3 mm in 3.658 m). Miter corners accurately and connect securely.
2. Do not use exposed fasteners, including pop rivets, on moldings and trim.

E. Install suspension system carriers so they are aligned and securely interlocked with one another. Remove and replace dented, bent, or kinked members.

F. Cut linear metal panels for accurate fit at borders and at interruptions and penetrations by other work through ceilings.

G. Install linear metal panels in coordination with suspension system and exposed moldings and trim.
1. Install linear metal panels oriented as indicated on Drawings.
2. Fit adjoining units to form flush, tight joints. Scribe and cut units for accurate fit at borders and around construction penetrating ceiling.
3. Install panels with butt joints aligned using internal panel splices.
4. Where metal panel ends are visible, install end caps unless trim is indicated.
5. Install filler strips where indicated.

H. Install sound-absorbent acoustic insulation as ceilings are installed in thickness, extent, and in locations indicated..
1. Install sound-absorbent pads at right angle to perforated metal panels so pads do not hang unsupported.
2. Install sound-absorbent insulation blankets/batts over entire area of linear metal ceilings.
3. Maintain minimum 3 inch clearance of insulation around recessed lighting fixtures not rated for or protected from contact with insulation.

I. Plenum Access Panels: Fabricate upward accessible assembly, according to manufacturer's instructions, for plenum access at locations indicated.

3.04 CLEANING

A. Clean exposed surfaces of linear metal ceilings, including trim and edge moldings after removing remaining strippable, temporary protective covering if any. Comply with manufacturer's written instructions for stripping of temporary protective covering, cleaning, and touchup of minor finish damage. Remove and replace ceiling components that cannot be successfully cleaned and repaired to permanently eliminate evidence of damage, including dented and bent units.

END OF SECTION 095423

SECTION 096513 - RESILIENT BASE AND ACCESSORIES

PART 1 - GENERAL

1.1 RELATED DOCUMENTS

A. Drawings and general provisions of the Contract, including General and Supplementary Conditions and Division 01 Specification Sections, apply to this Section.

1.2 SUMMARY

A. Section Includes:
   1. Thermoplastic-rubber base.
   2. Rubber stair accessories.
   3. Rubber molding accessories.

1.3 SUBMITTALS

A. Product Data: For each type of product.

B. Samples for Initial Selection: For each type of product indicated.

C. Product Schedule: For resilient base and accessory products. Use same designations indicated on Drawings.

1.4 MAINTENANCE MATERIAL SUBMITTALS

A. Furnish extra materials, from the same product run, that match products installed and that are packaged with protective covering for storage and identified with labels describing contents.

   1. Furnish not less than 10 linear feet for every 500 linear feet or fraction thereof, of each type, color, pattern, and size of resilient product installed.

1.5 DELIVERY, STORAGE, AND HANDLING

A. Store resilient products and installation materials in dry spaces protected from the weather, with ambient temperatures maintained within range recommended by manufacturer, but not less than 50 deg F (10 deg C) or more than 90 deg F (32 deg C).

1.6 FIELD CONDITIONS

A. Maintain ambient temperatures within range recommended by manufacturer, but not less than 70 deg F (21 deg C) or more than 95 deg F (35 deg C), in spaces to receive resilient products during the following periods:

1. 48 hours before installation.
2. During installation.
3. 48 hours after installation.

B. After installation and until Substantial Completion, maintain ambient temperatures within range recommended by manufacturer, but not less than 55 deg F (13 deg C) or more than 95 deg F (35 deg C).

C. Install resilient products after other finishing operations, including painting, have been completed.

PART 2 - PRODUCTS

2.1 THERMOPLASTIC-RUBBER BASE

A. Manufacturers: Subject to compliance with requirements, provide products by one of the following:
1. Refer to Finish Legend on drawings.

B. Product Standard: ASTM F 1861, Type TP (rubber, thermoplastic).

1. Group: I (solid, homogeneous).
2. Style and Location:

a. Style A, Straight: Provide in areas with carpet.
b. Style B, Cove: Provide in areas with resilient floor coverings.

C. Thickness: 0.125 inch (3.2 mm).

D. Height: As indicated on Drawings.

E. Lengths: Coils in manufacturer's standard length.

F. Outside Corners: **Preformed corners only**

G. Inside Corners: **Preformed corners only**

H. Colors: As selected by architect from full range of available colors.

2.2 RUBBER MOLDING ACCESSORY

A. Manufacturers: Subject to compliance with requirements, provide products by one of the following:
   1. Refer to Finish Legend on drawings.

B. Description: Rubber joiner for tile and carpet.

C. Locations: Provide rubber molding accessories in areas indicated.

D. Colors and Patterns: As selected by architect from full range of available colors.

2.3 RESILIENT STAIR ACCESSORIES (RS).

A. Treads: FS RR-T-650.

   1. Johnsonite; VIRHS-RD
   2. Marley Flexco (USA), Inc.; Radial II, Type 775
   3. Equal by Roppe

B. Surface Design: Type 2

   1. Type 2 Design: Raised-disc pattern
   2. Abrasive Strips: 2" carborundum strip for visually impaired

C. Nosing Style: Square, adjustable to cover angles between 60 and 90 degrees.

D. Nosing Height: 1-1/2 inches (38 mm).

E. Thickness: ¼"

F. Size: Lengths and depths to fit each stair tread in one piece or, for treads exceeding maximum lengths manufactured, in equal-length units.

G. Risers: Smooth, flat, coved-toe, 7 inches (178 mm) high by length matching treads; produced by same manufacturer as treads and recommended by manufacturer for installation with treads.

   1. Thickness: 0.125 inch (3.2 mm).

H. Stringers: Of same thickness as risers, height and length after cutting to fit risers and treads and to cover stair stringers; produced by same manufacturer as treads and recommended by manufacturer for installation with treads.

I. Note: Landings shall be covered with VCT as specified in the Finish Schedule.

J. Color selected by Architect from manufacturer's complete line of available products.

2.4 INSTALLATION MATERIALS

A. Trowelable Leveling and Patching Compounds: Latex-modified, portland-cement-based or blended hydraulic-cement-based formulation provided or approved by resilient-product manufacturer for applications indicated.

B. Adhesives: Water-resistant type recommended by resilient-product manufacturer for resilient products and substrate conditions indicated.

PART 3 - EXECUTION

3.1 EXAMINATION

A. Examine substrates, with Installer present, for compliance with requirements for maximum moisture content and other conditions affecting performance of the Work.

1. Verify that finishes of substrates comply with tolerances and other requirements specified in other Sections and that substrates are free of cracks, ridges, depressions, scale, and foreign deposits that might interfere with adhesion of resilient products.

B. Proceed with installation only after unsatisfactory conditions have been corrected.

1. Installation of resilient products indicates acceptance of surfaces and conditions.

3.2 PREPARATION

A. Prepare substrates according to manufacturer's written instructions to ensure adhesion of resilient products.

B. Fill cracks, holes, and depressions in substrates with trowelable leveling and patching compound; remove bumps and ridges to produce a uniform and smooth substrate.

C. Do not install resilient products until materials are the same temperature as space where they are to be installed.

1. At least 48 hours in advance of installation, move resilient products and installation materials into spaces where they will be installed.

D. Immediately before installation, sweep and vacuum clean substrates to be covered by resilient products.

3.3 RESILIENT BASE INSTALLATION

A. Comply with manufacturer's written instructions for installing resilient base.

B. Apply resilient base to walls, columns, pilasters, casework and cabinets in toe spaces, and other permanent fixtures in rooms and areas where base is required.

C. Install resilient base in lengths as long as practical without gaps at seams and with tops of adjacent pieces aligned.

D. Tightly adhere resilient base to substrate throughout length of each piece, with base in continuous contact with horizontal and vertical substrates.

E. Do not stretch resilient base during installation.

F. Preformed Corners: Install preformed corners before installing straight pieces.

G. On masonry surfaces or other similar irregular substrates, fill voids along top edge of resilient base with manufacturer's recommended adhesive filler material.

3.4 RESILIENT ACCESSORY INSTALLATION

A. Comply with manufacturer's written instructions for installing resilient accessories.

B. Resilient Stair Accessories:

1. Use stair-tread-nose filler to fill nosing substrates that do not conform to tread contours.
2. Tightly adhere to substrates throughout length of each piece.

C. Resilient Molding Accessories: Butt to adjacent materials and tightly adhere to substrates throughout length of each piece. Install reducer strips at edges of floor covering that would otherwise be exposed.

3.5 CLEANING AND PROTECTION

A. Comply with manufacturer's written instructions for cleaning and protecting resilient products.

B. Perform the following operations immediately after completing resilient-product installation:

1. Remove adhesive and other blemishes from surfaces.
2. Damp-mop horizontal surfaces to remove marks and soil.

C. Protect resilient products from mars, marks, indentations, and other damage from construction operations and placement of equipment and fixtures during remainder of construction period.

D. Cover resilient products subject to wear and foot traffic until Substantial Completion.

END OF SECTION 096513

SECTION 096519 – RESILIENT TILE FLOORING (LVT)

PART 1 GENERAL

1.1 SUMMARY

A. Section Includes:

1. Luxury Vinyl Tile

2. Description of Work: Provide and install all modular resilient flooring as required by contract documents and their specifications.

1.2 SUBMITTALS

A. Qualification Data for Installer:

1. The installation provider shall be directly responsible for the quality of the completed floor covering installation, including the quality of both the materials and labor used in the installation.

2. The installation provider shall directly warrant to the end use all products, materials and services related to the floorcovering installation (including any floorcovering(s), or other products or materials used in the installation) meeting specifications set forth herein.

3. Installation provider shall warrant all installation services will be free from defects in workmanship for a period of at least one (2) year following their completion, and that in the event of defective services, the installation provider will re-perform the effected services and, as necessary, supply new products of the same or similar grade sufficient to repair or replace products adversely affected.

4. The installation provider shall have successful resilient flooring installation experience on work similar to the work of this Section.

5. The installation provider shall employ workers for this Project who are competent in techniques required by the manufacturer (trained or certified by the manufacturer) for resilient flooring installation.

6. Installation provider's proof of insurance, copy of contractor's license, and worker's compensation certificate.

B. Qualification Data for Manufacturer:

1. Commitment to sustainability – resilient provider shall demonstrate through programs of source reduction, recycling, reuse, water conservation and conservation of raw material usage its commitment to sustainability

D. All applicable product warranties provided by the manufacturer.

1. Provide the following manufacturer's written warranty for a period of fifteen years from date of product invoice.

a. Resilient flooring products are warranted against excessive wear defined as complete removal of pattern and/or color due to normal traffic and assuming proper installation and maintenance according to manufacturer's guidelines.

b. Resilient flooring products are warranted against odor from plasticizer hydrolysis caused by moisture and alkalinity in concrete slabs up to manufacturer specified limits.

c. Resilient flooring products are warranted against manufacturing defects.

F. Maintenance Instructions - Two (2) copies of the manufacturer's resilient flooring maintenance instructions.

PART 2 PRODUCTS

2.1 Luxury Vinyl Tile (LVT) Performance Standards. Resilient flooring shall meet the following performance standards:

0.1	Radiant Flux (ASTM E648)	$\geq$ 0.45 watts/cm^2, Class 1
0.2	Smoke Density (ASTM E662)	$\leq$ 450
0.3	Size & Squareness (ASTM F2055)	Passes, +/- 0.016 inch per linear foot
0.4	Thickness (ASTM F386)	Passes
0.5	IIC Sound Rating (ASTM E492-09)	64 IIC
0.6	Slip Resistance (ASTM D2047)	>0.55 wet/dry, ADA compliant
0.7	Static Load Limit (ASTM F970)	1500 psi
0.8	Flexibility (ASTM F137)	Passes
0.9	Resistance to heat (ASTM F1514)	Passes
0.10	Resistance to light (ASTM F1515)	Passes
0.11	Dimensional Stability (ASTM F2199)	Passes
0.12	Residual Indentation (ASTM F1914)	Passes
0.13	Resistance to Chemicals (ASTM F925)	Passes
0.13	Carbon Footprint	3rd party verified Carbon Neutral
0.14	Indoor Air Quality	GREENGUARD Gold, FloorScore®/CDPH 01350 Certified for Low-VOC emissions
0.15	Material Composition	Free of Ortho Phthalates, Added Formaldehyde and Heavy Metal Stabilizers
0.16	Ingredients and Life Cycle Impacts	Environmental Product Declaration
0.17	Sustainability Assessment	NSF/ANSI 332 Silver
0.18	LEED v4	Contributes to IEQ: Low emitting materials; M&R: EPD and EPR
0.19	End of Life	Recyclable

2.2 Product Construction Specification. Provide one of the products listed on the Finish Legend. LVT shall meet the following construction specifications:

A. Construction: High performance luxury vinyl tile

B. Class / ASTM F1700: Class III Printed Vinyl Tile

C. Wear Layer Thickness: 22 mil

D. Total Thickness: 4.5 mm

E. Backing Class: Commercial Grade with sound absorption characteristics to meet IIC Sound Rating requirement.

F. Total Recycled Content: at least 39%

G. Finish: Ceramor

H. Nominal Dimensions: 25 cm x 1 plank

I. Installation Recommendation: Direct glue installation using manufacturer's recommended installation product and in compliance with manufacturer's installation guidelines.

J. Installation Method: Per manufacturer's recommended installation method.

K. When flooring design installation includes modular carpet, there shall be no carpet to resilient transition strips or layering added.

2.3 Related Materials

A. Leveling compound – Use only Portland based leveling and patching compound as recommended by resilient flooring provider.

B. Glue – Use only the manufacturer's recommended installation products and install according to manufacturer's installation guidelines.

PART 3 EXECUTION

3.1 Pre-Installation Requirements

A. Examine substrates, with Installer present, for compliance with requirements for maximum moisture content and other conditions affecting performance of the work.

1. Verify that finishes of substrates comply with tolerances and other requirements specified in other Sections and that substrates are free of cracks, ridges, depressions, scale, and foreign deposits that might interfere with the proper installation of the resilient flooring.

2. Proceed with installation only after unsatisfactory conditions have been corrected.

3.2 Installation

A. General

1. Comply with manufacturer's instructions and recommendations. All product shall be installed as per installation description – reference 2.2.9.

B. Comply with manufacturer's instructions for subfloor evaluation for moisture and alkalinity.

C. Install resilient under open-bottom obstructions and under removable flanges and furnishings, and into alcoves and closets of each space.

1. Run resilient under open bottom items such as heating convectors, and install tight against walls, columns and cabinets so the entire floor area is covered with resilient.

2. Cutting shall be done in accordance with the manufacturer's recommendation, using the tools designed for the resilient being installed.

3. Use leveling compound where necessary. Any floor filling or leveling shall have a minimum of 4'0" of feather.

4. Expansion joints - Do not bridge building expansion joints with continuous resilient.

3.3 Cleaning and Protection

A. Comply with manufacturer's written instructions for cleaning and protecting resilient.

B. On completion of the installation in each area, all dirt, resilient scraps, etc. shall be removed from the surface of the floor.

C. Remove debris, and sort pieces to be saved from scraps to be recycled.

D. Construction manager shall protect resilient flooring against damage during remainder of construction period.

E. At the completion of the work and when directed by the construction manager, clean resilient floor as per the maintenance recommendations of the resilient manufacturer.

3.4 Inspection

A. Upon completion of the installation, the manufacturer and installer shall verify and certify by means of an affidavit of compliance that work is complete, properly installed and meets all specifications herein.

END OF SECTION 096519

SECTION 096617 – PRECAST TERRAZZO STAIR TREADS AND RISERS

Part 1 - General

1.1 SUMMARY

A. Types of Precast Terrazzo work included:
1. Precast Terrazzo treads and risers

B. Setting material, grouts, sealants and caulks

C. Installation of precast terrazzo stairs, base, sills, etc.

D. Related work not specified under this section
1. Installation of steel stairs to receive precast concrete treads and risers

1.2 REFERENCES

A. American Society for Testing and Materials (ASTM)
1. ASTM C-150
2. ASTM C-33
3. ASTM C-140
4. ASTM C-293
5. ASTM C-1028

B. National Terrazzo and Mosaic Association Inc. (NTMA)

C. Federal Register Part III
1. 28 CFR Part 36

1.3 SUBMITTALS

A. Shop Drawings
1. Submit shop drawings of all precast items showing detail sections and profile for all precast items. Details shall show all reinforcing and special hardware for fastening.

B. Samples:
1. Submit maximum of 3 samples 6" x 6" size for all color.
a. Color to be selected from Wausau Tile color pallet.
2. Submit two copies of NTMA maintenance literature.
3. Quality Assurance and Procedure Program

C. Performance Requirements:
1. Compressive Strength 4000 p.s.i.
2. Flexural Strength 600 p.s.i.

D. Certification:
1. Suppliers shall furnish certification attesting that materials meet specification requirements.

1.4 QUALITY ASSURANCE

A. Manufacturer's Instructions: In addition to specified requirements, comply with precast concrete manufacturer's instructions and recommendations for substrate preparation, materials storage, mixing and application, finishing and curing.

B. Qualifications: Precast Manufacturer and Trade Contractor must have a minimum of 5 years of successful experience on projects of similar magnitude and complexity to that indicated project. Manufacturer and contractor to be prequalified by Architect prior to bidding.

C. Manufacturer to supply a written Quality Assurance Program and Procedure manual.

1.5 DELIVERY, STORAGE AND HANDLING

A. Packaging and Shipping: Precast to be palletized and shrink wrapped, delivered in original unopened packaging with legible manufacturer identification, including size, piece number, quantities, manufacturer date and inspector initials.

B. Storage and Protection: Precast terrazzo to be stored indoors, sheltered from moisture in original packaging. Protect from damage by other trades.

1.6 WARRANTY

A. Manufacturer/Installer shall warrant installed system for a period of 1 year from date of substantial completion against failure of workmanship and materials.

Part 2 - Products

2.1 MANUFACTURERS

A. Acceptable Manufacturer:
1. Wausau Tile, Inc.
2. Key Resin
3. or approved equal.

B. Drawings and specifications are based on manufacturer's literature from Wausau Tile, Inc. Other manufacturer's shall comply with minimum levels of material specifications and detailing indicated on the drawings of specified herein. Note: Prior approval before bidding of alternative manufacturers is required.

C. Color to match adjacent terrazzo flooring, which consists of the following components:

- Epoxy: SW7018 Dove Tail
- 35% Black Stallion #0,1 (marble)
- 35% Gun Metal #0,1 (marble)
- 10% Mocha #0,1 (marble)
- 20% Classic Mother of Pearl #2

2.2 MATERIALS

A. Portland Cement: ASTM C-150 Specifications for Portland Cement.

B. Aggregates: All aggregates to meet ASTM C-33 specifications, cleaned and properly graded to size. Aggregate shall be blended to meet individual project requirements.

C. Coloring; Pigments used shall be inorganic, resistant to alkalinity and used per manufacturer's recommendations.

D. Reinforcement and Hardware:

1. Reinforce precast with deformed rods or wire mesh or both as recommended by precast manufacturer.

E. Caulks & Sealants:

1. Urethane or Polyurethane Sealant
2. Color to be selected by Architect from standard color pallet.

F. Cleaner: Liquid neutral chemical cleaner, with pH factor between 7 and 8, of formulation recommended by sealer manufacture for type of precast used.

G. Sealer: Colorless, slip and stain-resistant penetrating sealer with pH factor between 7 and 8, that does not affect color or physical properties of precast surface. Flash point (ASTM D56): 80 degrees F, Minimum.

2.3 MANUFACTURED UNITS

A. Sizing Tolerances:

1. All units to conform to shop drawings with a 1/16" tolerance in dimension.

B. Precast Surfaces and Edges:

1. All exposed edges to be ground with a minimum of 1/16" bevel.

2. All finished surfaces to be free of holes and to have overall uniformity in matrix and concrete finish.

3. All precast finished surfaces to be sealed with a sealer approved by manufacturer.

Part 3 - Execution

3.1 INSPECTION

A. Examine areas to receive precast for the following:

1. Defects in existing work.
2. Deviations beyond allowable tolerances for the substrate.

B. Start work only when all defects have been corrected by others.

3.2 INSTALLATION

A. Setting:

1. Set accurately as shown on approved shop drawings. Setting methods are:
    a. Thin Set

2. Alignment of precast should be straight and true to all dimensions. It may not vary more than 1/8" in length, height or width.

3. Install anchors as shown on details.

4. Fill joints between with manufacturer -approved caulk or as specified.

B. Protection:

1. Upon completion, the work shall be ready for final inspection and acceptance by owner or owner agent.

2. General Contractor shall protect the finished work from the time the contractor completes the work.

C. Finish: All precast finished surfaces to be sealed with a sealer approved by manufacturer.

End of Section 096617

SECTION 096813 - TILE CARPETING

PART 1 - GENERAL

1.1 RELATED DOCUMENTS

A. Drawings and general provisions of the Contract, including General and Supplementary Conditions and Division 01 Specification Sections, apply to this Section.

1.2 SUMMARY

A. Section includes modular, tufted carpet tile.

1.3 ACTION SUBMITTALS

A. Product Data: For each type of product.

1. Include manufacturer's written specifications and lab documents for any physical testing.
2. Include manufacturer's written installation recommendations for each type of substrate as specified in carpet manufacturer's installation guidelines and/or Carpet & Rug Institute Installation Standard 2011, where applicable.
3. Include carpet maintenance recommendations as outlined by the carpet manufacturer.
4. Carpet Manufacturer - provide a product EPD (Environmental Product Declaration) shall also submit a plan for recycling the specified carpet at the end of the useful life of the carpet.
5. Laboratory Test Reports: For flooring products, indicating compliance with requirements for low-emitting materials.

B. Shop Drawings: For carpet tile installation, plans showing the following:

1. Columns, doorways, enclosing walls or partitions, built-in cabinets, and locations where cutouts are required in carpet tiles.
2. Carpet tile type, color, and dye lot.
3. Type of subfloor.
4. Type of installation.
5. Pattern of installation.
6. Pattern type, location, and direction.
7. Installation method: Brick
8. Type, color, and location of insets and borders.
9. Type, color, and location of edge, transition, and other accessory strips.
10. Transition details to other flooring materials.

C. Samples: For each of the following products and for each color and texture required. Label each Sample with manufacturer's name, material description, color, pattern, and designation indicated on Drawings and in schedules.

1. Carpet Tile: Full-size Sample.
2. Exposed Edge, Transition, and Other Accessory Stripping: 12-inch- (300-mm-) long Samples.

1.4 CLOSEOUT SUBMITTALS

A. Maintenance Data: For carpet tiles to include in maintenance manuals. Include the following:

1. Methods for maintaining carpet tile, including cleaning and stain-removal products and procedures and manufacturer's recommended maintenance schedule.
2. Precautions for cleaning materials and methods that could be detrimental to carpet tile.

1.5 MAINTENANCE MATERIAL SUBMITTALS

A. Furnish extra materials, from the same product run, that match products installed and that are packaged with protective covering for storage and identified with labels describing contents.

1. Carpet Tile: Full-size units equal to 5 percent of amount installed for each type indicated, but not less than 10 square yards.

1.6 QUALITY ASSURANCE

A. Installer Qualifications: An experienced installer who is certified by the Floor Covering Installation Board or can demonstrate compliance with its certification program requirements.

B. Mockups: Build mockups to verify selections made under Sample submittals, to demonstrate aesthetic effects, and to set quality standards for fabrication and installation.
1. Subject to compliance with requirements, approved mockups may become part of the completed Work if undisturbed at time of Substantial Completion.

1.7 DELIVERY, STORAGE, AND HANDLING

A. Comply with carpet manufacturer's installation recommendations and the Carpet & Rug Institute Installation Standard 104 where applicable.

1.8 FIELD CONDITIONS

A. Comply with carpet manufacturer's installation recommendations and the Carpet & Rug Institute Installation Standard 104 for temperature, humidity, and ventilation limitations.

B. Environmental Limitations: Do not deliver or install carpet tiles until spaces are enclosed and weathertight, wet-work in spaces is complete and dry, and ambient temperature and humidity conditions are maintained at levels planned for building occupants during the remainder of the construction period.

C. HVAC system should be operational and running prior to carpet installation and remain running after carpet installation.

D. Do not install carpet tiles over concrete slabs until slabs have cured and are sufficiently dry to allow bond between adhesive and concrete. Concrete slabs should have moisture and pH readings that are within the specified tolerance of the adhesive to be used.

E. Where demountable partitions or other items are indicated for installation on top of carpet tiles, install carpet tiles before installing these items.

1.9 WARRANTY

A. Special Warranty for Carpet Tiles: Manufacturer agrees to repair or replace components of carpet tile installation that fail in materials or workmanship within specified warranty period.

1. Warranty does not include deterioration or failure of carpet tile due to unusual traffic, failure of substrate, vandalism, or abuse.
2. Failures include, but are not limited to, the following:

    a. More than 10 percent face fiber loss or edge raveling.
    b. Dimensional instability.
    c. Excess static discharge.
    d. Loss of tuft-bind strength.
    e. Delamination.
    f. Where face fiber is 100 percent solution dyed, inability to remove acid based stains.
    g. Lack of colorfastness to atmospheric contaminants.
    h. Carpet must be manufactured and warranted by same manufacturer.

3. Warranty Period: 15 years from Substantial Completion.

PART 2 - PRODUCTS

2.1 CARPET TILE

A. Source Limitations:

1. Single Source Responsibility: Provide products that have components manufactured by a single source. Fiber and backing, as well as final carpet product, should be manufactured and warranted by same company.
2. Commitment to sustainability: Carpet manufacturer must practice environmental responsibility through programs of source reduction, recycling, reuse, and conservation. Manufacturer to provide a product EPD (Environmental Product Declaration)

B. Fiber Modification Ratio: Less than 2.2

C. Fiber: Premium 100% Recycled Content Nylon Fiber

D. Dye Method: 100% Solution-Dyed

E. Traffic Classification: Heavy

F. Size: 25 cm x 1 m plank

G. Performance Characteristics:
1. Critical Radiant Flux Classification, Flooring Radiant Panel ASTM E 648: Not less than 0.45 W/sq. cm.
2. Smoke Density: Less than 450 per ASTM E662.
3. Methanamine Pill Test CPSC FF1-70: Must pass pill test.
4. Tuft Bind: Not less than 8 lbf (36 N) according to ASTM D 1335.
5. Delamination: Not less than 3.5 lbf/in. (0.6 N/mm) according to ASTM D 3936.
6. Dimensional Tolerance: Within 1/32 inch (0.8 mm) of specified size dimensions, as determined by physical measurement.
7. Dimensional Stability: 0.0119 percent or less according to ISO 2551 (Aachen Test).
8. Colorfastness to Crocking: Not less than 4, wet and dry, according to AATCC 129 and AATCC 164.
9. Colorfastness to Light: Not less than 4 after 60 AFU (AATCC fading units) according to AATCC 16, Option E.
10. Electrostatic Propensity: Less than 3.5 kV according to AATCC 134.

H. Basis of Design (CPT-1) – Manaufacturer/Product:
1. Interface; Style Number: 138780AK0 SL920 20 OZ x 25 CM x 1 M; Sample Number 273673-002
   Or
   Mannington; Customer Number: P-557085-5272; Style/Color: M49017-001B-8

2.2 INSTALLATION ACCESSORIES

A. Trowelable Leveling and Patching Compounds: Latex-modified, hydraulic-cement-based formulation provided or recommended by carpet tile manufacturer.

B. Trowelable Adhesives: Water-resistant, mildew-resistant, nonstaining, premium grade, pressure-sensitive type to suit products and subfloor conditions indicated, that comply with flammability requirements for installed carpet tile, and are recommended by carpet tile manufacturer for releasable installation and moisture content.

C. Non-Trowelable Adhesive: Water-resistant, mildew-resistant, non-staining, pressure-sensitive type to suit products and subfloor conditions indicated, that complies with flammability requirements for installed carpet tile and is recommended by carpet tile manufacturer for releasable installation where slab moisture does not exceed 95 percent per ASTM F 2170 or 10 lbs (4.56 kg) per ASTM F 1869. Each carpet tile must be adhered to the subfloor.

D. Metal Edge/Transition Strips: Extruded aluminum with mill finish of profile and of height required to protect exposed edge of carpet, and of maximum lengths to minimize running joints.

PART 3 - EXECUTION

3.1 EXAMINATION

A. Examine substrates, areas, and conditions, with Installer present, for compliance with requirements for maximum moisture content, alkalinity range, installation tolerances, and other conditions affecting carpet tile performance.

B. Examine carpet tile for type, color, pattern, and potential defects prior to installation. See manufacturer's requirements for substrate conditions and ambient conditions.

C. Concrete Slabs: Verify that finishes comply with requirements of manufacturer and that surfaces are free of cracks, ridges, depressions, scale, and foreign deposits.
   1. Where previous surface treatments are unknown, or where other concerns exist as to the ability of the adhesive to bond to the substrate, a 24 hour bond test is recommended.

D. Proceed with installation only after unsatisfactory conditions have been corrected.

3.2 PREPARATION

A. General: Comply with Carpet & Rug Institute Installation Standard 104 and with carpet tile manufacturer's written installation instructions for preparing substrates indicated to receive carpet tile.

B. Use trowelable leveling and patching compounds that contain a cementitious base with a latex additive, according to manufacturer's written instructions, to fill cracks, holes, depressions, and protrusions in substrates. Fill or level cracks, holes and depressions 1/8 inch

(3 mm) wide or wider, and protrusions more than 1/32 inch (0.8 mm) unless more stringent requirements are required by manufacturer's written instructions.

C. Concrete Substrates: Remove coatings, including curing compounds, and other substances that are incompatible with adhesives and that contain soap, wax, oil, or silicone, without using solvents. Use mechanical methods recommended in writing by adhesive and carpet tile manufacturers.

D. Broom and vacuum clean substrates to be covered immediately before installing carpet tile.

3.3 INSTALLATION

A. General: Comply with Carpet & Rug Institute Installation Standard 104 "Modular Carpet" and with carpet tile manufacturer's written installation instructions.

B. Installation Method: Follow installation guidelines per manufacturer.

C. Maintain dye-lot integrity. Utilize mergeable dye lot products whenever possible. Do not mix dye lots in same area unless the specific carpet style in manufactured as a mergeable dye lot product.

D. Maintain pile-direction patterns recommended in writing by carpet tile manufacturer.

E. Cut and fit carpet tile to butt tightly to vertical surfaces, permanent fixtures, and built-in furniture including cabinets, pipes, outlets, edgings, thresholds, and nosings. Bind or seal cut edges as recommended by carpet tile manufacturer.

F. Extend carpet tile into toe spaces, door reveals, closets, open-bottomed obstructions, removable flanges, alcoves, and similar openings.

G. Maintain reference markers, holes, and openings that are in place or marked for future cutting by repeating on carpet tile as marked on subfloor. Use nonpermanent, nonstaining marking device.

H. Install pattern parallel to walls and borders.

3.4 CLEANING AND PROTECTION

A. Perform the following operations immediately after installing carpet tile:

1. Remove excess adhesive and other surface blemishes using cleaner recommended by carpet tile manufacturer.
2. Remove yarns that protrude from carpet tile surface.
3. Vacuum carpet tile using commercial machine with face-beater element.

B. Protect installed carpet tile to comply with Carpet & Rug Institute Installation Standard, "Protecting Indoor Installations."

C. When construction or move-in activities will continue where new carpet is installed, provide non-staining building material paper to protect carpet. Do not use plastic sheeting as it can trap moisture, and self-sticking plastic sheeting can transfer adhesive residue to carpet that will attract soil.

D. When heavy objects are moved over carpet within 24 hours of installation, use plywood over carpet to prevent buckling and wrinkling.

E. Protect carpet tile against damage from construction operations and placement of equipment and fixtures during the remainder of construction period. Use protection methods indicated or recommended in writing by carpet tile manufacturer.

END OF SECTION 096813

SECTION 098433 - SOUND-ABSORBING WALL UNITS

PART 1 - GENERAL

1.1 SUMMARY

A. Section includes:

1. Sound-absorbing wall panels and screens.

B. Related Sections:
1. Section 092900 "Gypsum Board."

1.2 REFERENCES

A. ASTM International:

1. ASTM C423 (2009) – Standard Test Method for Sound Absorption and Sound Absorption Coefficients by the Reverberation Room Method.
2. ASTM E84 (2016) – Standard Test Method for Surface Burning.

B. ISO – International Organization for Standardization

1. ISO 105 (2013) – Textiles – Tests for color fastness.
2. ISO 354 (2003) – Measurement of sound absorption in a reverberation room.
3. ISO 11654 (1997) – Sound absorbers for use in buildings – Ratings of sound absorption.
4. ISO 9705 (2016) – Room corner test for wall and ceiling lining products – Part 1: Test method for a small room configuration.

C. Standards Council of Canada

1. CAN/ULC S102:2018 Standard Method of Test for Surface Burning Characteristics of Building Materials and Assemblies

1.3 DEFINITIONS

A. NRC: Noise Reduction Coefficient

B. SAA: Sound Absorption Average

1.4 SUBMITTALS

Product Data: For each type of product.

A. Sustainable Design Submittals:
   1. MR Material Ingredients: Option 1 Material Ingredient Reporting
   2. MR Sourcing of Raw Materials: Recycled Content
   3. MR Sourcing of Raw Materials: Calculated percentage or material extracted locally
   4. EQ Low Emitting Materials: Meet California Department of Health (CDPH) Standard Method v1.1 - 2020 or v1.2 - 2017 for low emitting materials
   5. EQ Low Emitting Materials: Low VOC Content
   6. EQ Acoustic Performance: Meet Sounds Transmission and/or Reverberation time.

B. Samples: For each sound-absorbing panel.

C. Coordination Drawings: Elevations and other details, drawn to scale on which the following items are shown and coordinated with each other.

D. Electrical outlets, switches, and thermostats.

E. Items penetrating or covered by sound-absorbing panels.

F. Lighting fixtures:
   1. Air outlets and inlets
   2. Speakers
   3. Alarms
   4. Sprinklers
   5. Access panels

G. Sample warranty: Manufacturer's special warranty

H. Maintenance data: Include manufacturer's written cleaning and stain removal recommendations.

I. Extra Materials: Provide two percent of the amount installed for each indicated.

1.5 QUALITY ASSURANCE

A. Mockups: Construct mock-ups for evaluation of surface preparation and application workmanship.

B. Build mock-ups of size indicated and in location designated by Architect.

C. Maintain mock-ups during construction in an undisturbed location as a standard for judging workmanship.

D. Demolish and remove mock-ups unless otherwise directed.

E. Preinstallation Meeting: Conduct two weeks prior to starting work of this section.

1.6 DELIVERY, STORAGE AND HANDLING

A. Deliver materials in the manufacturer's original, unopened, undamaged containers with identification labels intact.

B. Store materials protected from exposure to harmful environmental conditions and at temperature conditions recommended by the manufacturer.

C. Handle materials to avoid damage.

1.7 PROJECT CONDITIONS

A. Maintain temperature, humidity, and ventilation within limits recommended by the manufacturer.

1.8 WARRANTY

A. Special Warranty: Manufacturer agrees to repair or replace the defective parts of the panel(s).

B. Warranty does not include:

1. Deterioration or failure of panel due to moisture, dust, stains, or other contaminants from daily use.

2. Any condition resulting from a use for which the product was not designed.

3. Differential shading from direct sunlight exposure.

4. Tears, burns, pulls, cuts, or damage resulting from improper maintenance and installation.

C. Warranty Period: Twenty years from date of manufacture.

PART 2 - PRODUCTS

2.1 MANUFACTURERS

A. Acceptable Manufacturers: Acoufelt, 2650 N. Opdyke Road, Suite A, Auburn Hills, MI 48326 USA 1-800-966-8557, www.acoufelt.com.

B. MDC.

2.2 SOUND-ABSORBING WALL PANELS AND SCREENS

A. Double-Layer Sound-Absorbing Wall Panel

1. Basis of Design Product: Acoufelt: Fracture Two-Tone
   A) MDC: Zintra - Shapes
2. Options: **Dash**
3. Composition: 100 percent polyester
4. Material: FilaSorb™
5. Recycled Content: 60 percent minimum recycled PET (Polyethylene Terephthalate)
6. Mounting: Back mounted with manufacturer's standard [**Adhesive Backing]** [**Construction Adhesive**], secured to substrate.
7. Acoustical Performance: Sound absorption NRC according to ASTM C 423: 0.45
8. Surface Burning Characteristics: Comply with ASTM E84; testing by a qualified agency.
   8.1. Flame Spread Index: 20
   8.2. Surface-Developed Index: 350
9. Thickness: 1/2 inch (14mm – 12mm + 2mm)
10. Density: 14mm -.049 pound per cu. ft, 26mm - 0.98 pound per cu. Ft.
11. Dimensions: 48 inches wide by 108 inches long. (1219mm by 2743 mm)
12. Color: As noted on Finish Legend.

2.3. ACCESSORIES

Construction Adhesive. As recommended by manufacturer including, but not limited to the following:

A. Liquid Nails®; LN-901.
B. Sika Corporation; Sikaflex®-11 FC.
C. Spray Adhesive: As recommended by manufacturer.

PART 3 - EXECUTION

3.1 EXAMINATION

Verification of Site Conditions:

A. Verify that substrate conditions are acceptable for product installation in accordance with manufacturer's written instructions.
B. Do not proceed with installation until acceptable conditions are corrected.

3.2 PREPARATION

Surface Preparation: Ensure that surface is clean; free of any dust, flaking paint, loose debris, or grime; structurally sound; dry; and free of imperfections.

3.3 INSTALLATION

A. Install panels in accordance with manufacturer's written instructions.
B. Site Tolerances: Align panels to their closest match at eye level. Allow plus or minus 5 mm (0.197 inch).

3.4 CLEANING AND PROTECTION

A. After installation, clean panels in accordance with manufacturer's written instructions.
B. Maintain panels in accordance with manufacturer's written instructions.

END OF SECTION 098433

SECTION 098434 – WOOD VENEER SOUND-ABSORBING WALL UNITS

PART 1. GENERAL

1.01 Scope

A. Include all labor, materials, and plant as required for the fabrication and delivery of acoustical wall/ceiling system complete in all respects as described and specified herein.

1.02 Related Work by Other

A. Related Sections
   1. Section 092216 "Non-Structural Metal Framing"
   2. Section 092900 "Gypsum Board"

1.03 Quality Assurance

A. Manufacturer & Installer: Firm manufacturing the specified product shall have adequate capacity required for projects listed and have successfully completed similar projects for a period of not less than five years. The installer should be approved by the manufacturer as qualified to perform work required.

B. Reference Standards: Conform to all governing laws, building codes, and the following performance criteria:

   1. Fire Performance Characteristics: Provide panels with surface-burning characteristics as determined by testing panel components in accordance with ASTM E84 test procedures. ASTM E-84 testing must be performed by an independent testing organization acceptable to authorities having jurisdiction.
      Panels will be finished with Fire retardant clear lacquer.

ATM E-84	Classification	Class "A" or "1"
	Flame Spread:	25 or less
	Smoke Developed:	450 or less

   2. Acoustical Performance Characteristics: Provide "no added formaldehyde" acoustic panels with acoustical absorption characteristics as indicated in Part 2, which have been determined by testing fully assembled production material (using 96-112kg/m³ (6 - 7lb/ft³) density fiber glass insulation) in accordance with ASTM C-423 (Type A and F5 mounting

method as defined by ASTME-795) by a testing organization acceptable to authorities having jurisdiction.

1.04 Submittals

A. Submit a complete sets of CAD generated shop drawings prepared by the manufacturer showing all necessary details and dimension requirements which will subsequently be field verified and revised as required by the Architect.

B. Samples: Submit (3 sets) manufacturers standard 8" X 5" sample panels of each type of product as specified in Part 2 to for approval. Product shall be original production material in veneer finish specified for final use.

C. Certification: Submit to the owner a certificate of compliance to specified acoustical and fire performance criteria as stated section 1.03 and Part 2 of this specification, signed by an officer of the panel manufacturer and attach independent laboratory test results for each product used, showing that the products supplied as components meet or exceed the specified requirements. Submit additional test results to owner as requested detailing compliance to updated code requirements.

D. Prior Approval: Manufacturers not listed in section 2.01 of this specification and wishing to be submitted as an equal on the project must submit information in accordance with section 012500 Substitution Procedures. The information submitted must give evidence to show that the alternative product equals or exceeds the attributes and performance of the specified product.

E. Manufacturers Approval: The manufacturer shall have the right to approve the selection of the installing contractor and to verify that said contractor has sufficient experience and expertise to complete the project in a satisfactory manner.

1.05 Product Delivery, Storage and Handling

A. Deliver panels and related components to the site for installation in accordance with a reasonable schedule furnished by the contractor. On-site storage shall be such as to assure that all panels and associated materials are protected from damage.

B. Prior to panel installation the site must be free of all wet and dusty trades and the climatic conditions stabilized to normal operational levels. Panels shall be allowed to stabilize on site 72 hours prior to installation.

C. PANELS MUST BE STORED, INSTALLED AND MAINTAINED ONLY IN A SECURE AMBIENT ENVIRONMENT (HUMIDITY MIN. 35% - MAX. 55%, TEMPERATURE NOT TO EXCEED 80° F (27° C)).

1.06 Guarantee

A. Furnish to the Architect in the Owner's name, the manufacturers written guarantee covering the products supplied against defects in materials and workmanship under normal operating conditions for a period of one year from the date of shipment. Submit certificates of compliance showing warranty period by dates for each project completed to the Owner.

B. All system components shall be manufactured and supplied by the named manufacturer. Individual components, provided by individual suppliers will not be considered or accepted.

PART 2 PRODUCTS

2.01 Sound-Absorbing Wall Units

Furnish and deliver as described in this section for installation in areas as shown on drawings meeting or exceeding the following requirements:

A. Basis of Design: Decoustics SOLO M TYPE 8 PANELS, as manufactured by CertainTeed Architectural

B. Woodworks Grille-Forte, as manufactured by Armstrong

The panels shall be comprised of a single piece Class A fire rated "No added Formaldehyde" MDF core of 16mm (5/8") thickness faced with a real wood veneer. The structure is perforated by means of "V" routing on 8mm (5/16") centers and intersecting perforations of 8mm (5/16") diameter on staggered 16mm (5/8") centers. The panels shall be supplied with a black facing on the back side to prevent fiber glass insulation color from "reading" through. The panels shall be fabricated to sizes required by field dimensions supplied by the installing contractor and will not vary from determined sizes by more than +/- 3 mm (1/8") vertically and horizontally. The panel shall be constructed using fire retardant core components meeting or exceeding Class A (Flame-spread of 25 or less and Smoke Developed of 450 or less) when tested in accordance with ASTM E-84 or UL-723 procedures.

1. Veneer to be: As indicated on drawings.
2. Semi-rigid fiber glass acoustical insulation of adequate thickness required to meet the acoustic absorption requirements can be installed behind the wall panels. The boards shall be supplied with a black facing on the back side to prevent fiber glass insulation color from "reading" through, Panels shall have noise reduction coefficient values of the following when tested in accordance with section 1.03 of this specification.
3. Installation shall be by use of concealed aluminum panel clips factory supplied and field attached to the back of the panels, engaged into factory supplied wall clips or continuous Z track fastened to the wall. Clip spacing to be maximum horizontal centres of 24" (610mm). Adhesively mounted clips are not acceptable.

4. Installation shall be in accordance with the manufacturers' instructions and as shown on manufacturer's shop drawings. Installer shall provide shimming and adjustments as required to maintain consistent alignment of joints and of finished panel faces.

PART 3 INSPECTIONS AND APPROVAL

3.01 Adjustment and Replacement

A. The Owner shall inspect the installation and product on completion. The manufacturer shall provide repair or replacement of components not conforming to requirements as stated herein and said work will then become bound by the terms of this specification.

B. Installation labor for removal and replacement of product improperly installed and not conforming to specified installation instructions as detailed in section 1.03 and Part 2 and shown on plans, shall be the responsibility of the installing Contractor.

END OF SECTION 098433

SECTION 099600 - HIGH-PERFORMANCE COATINGS

PART 1 - GENERAL

1.1 RELATED DOCUMENTS

A. Drawings and general provisions of the Contract, including General and Supplementary Conditions and Division 1 Specification Sections, apply to this Section.

1.2 SUMMARY

a. Surface preparation, painting, and finishing of exposed interior and exterior items and surfaces. Surface preparation, priming, and finish coats specified in this section are in addition to shop-priming and surface treatments specified in other sections (i.e. structural steel primer and hollow metal doors and frames).

b. Paint all exposed surfaces whether or not colors are designated in the schedules, except where a surface or material is specifically indicated not to be painted or is to remain natural. Where an item or surface is not specifically mentioned, paint the same as similar adjacent materials or surfaces. If color or finish is not designated, the Owner and Architect will select from standard colors or finishes available.

c. Painting is not required on pre-finished items, finished metal surfaces, concealed surfaces, operating parts, and labels. Do not paint over Underwriters Laboratories, Factory Mutual, or other code-required labels or equipment name, identification, performance rating, or nomenclature plates.

1.3 SUBMITTALS

A. Product Data: For each coating system indicated. Include block fillers and primers.

1. Material List: An inclusive list of required coating materials. Indicate each material and cross-reference the specific coating, finish system, and application. Identify each material by manufacturer's catalog number and general classification.
2. Manufacturer's Information: Manufacturer's technical information, including label analysis and instructions for handling, storing, and applying each material specified.

B. Samples for Initial Selection: Manufacturer's color charts showing the full range of colors available for each type of finish-coat material indicated.

1. After color selection, Architect will furnish color chips for surfaces to be coated.

C. Samples for Verification: For each color and material to be applied, with texture to simulate actual conditions, on representative samples of the actual substrate.

1. Provide stepped Samples defining each separate coat, including block fillers and primers. Use representative colors when preparing Samples for review. Resubmit until required sheen, color, and texture are achieved.
2. List of material and application for each coat of each sample. Label each sample for location and application.
3. Submit samples on the following substrates for Architect's review of color and texture:

    a. Concrete Masonry: Provide two 8-inch- (200-mm-) square samples of masonry, with mortar joint in the center, for each finish and color.

1.4 QUALITY ASSURANCE

A. Applicator Qualifications: Engage an experienced applicator who has completed high-performance coating system applications similar in material and extent to those indicated for Project and whose work has a record of successful in-service performance.

B. Source Limitations: Obtain primers and undercoat materials for each coating system from the same manufacturer as the finish coats.

C. Benchmark Samples (Mockups): Provide a full-coat benchmark finish sample of each type of coating and substrate required. Duplicate finish of approved sample Submittals.

1. Architect will select one room, area, or surface to represent surfaces and conditions for application of each type of coating and substrate.

    a. Wall Surfaces: Provide samples on at least 100 sq. ft. (9 sq. m) of wall surface.
    b. Small Areas and Items: Architect will designate items or areas required.

2. After permanent lighting and other environmental services have been activated, apply coatings in this room or to each surface as specified. Provide the required sheen, color, and texture of each surface.

    a. After finishes are accepted, Architect will use the room or surface to evaluate coating systems of a similar nature.

3. Final approval of colors will be from benchmark samples.

1.5 DELIVERY, STORAGE, AND HANDLING

A. Deliver materials to Project site in manufacturer's original, unopened packages and containers bearing manufacturer's name and label with the following information:

1. Name or title of material.
2. Product description (generic classification or binder type).
3. Manufacturer's stock number and date of manufacture.
4. Contents by volume, for pigment and vehicle constituents.
5. Thinning instructions.
6. Application instructions.
7. Color name and number.
8. Handling instructions and precautions.

B. Store materials not in use in tightly covered containers in a well-ventilated area at a minimum ambient temperature of 45 deg F (7 deg C). Maintain containers used in storage in a clean condition, free of foreign materials and residue.

1. Protect materials from freezing. Keep storage area neat and orderly. Remove oily rags and waste daily. Take necessary measures to ensure that workers and work areas are protected from fire and health hazards resulting from handling, mixing, and applying coatings.

1.6 PROJECT CONDITIONS

A. Apply coatings only when temperature of surfaces to be coated and surrounding air temperatures are between 45 and 95 deg F (7 and 35 deg C).

B. Do not apply coatings in snow, rain, fog, or mist; when relative humidity exceeds 85 percent; at temperatures less than 5 deg F (3 deg C) above the dew point; or to damp or wet surfaces.

1. Allow wet surfaces to dry thoroughly and attain temperature and conditions specified before proceeding with or continuing coating operation.

PART 2 - PRODUCTS

2.1 MANUFACTURERS

A. Products: Subject to compliance with requirements, provide one of the products indicated in the coating system descriptions.

B. Manufacturers' Names for Paint: The following manufacturers are referred to in the coating system descriptions by shortened versions of their names shown in parenthesis:
1. Sherwin Williams (S-W).
2. Moore: Benjamin Moore & Co. (Moore).
3. Pittsburg Paints

C. Manufacturers' Names for High Performance Coatings:
1. Tnemec
2. PPG
3. or prior approved equal

2.2 COATINGS MATERIALS, GENERAL

A. Material Compatibility: Provide primers, undercoats, and finish-coat materials that are compatible with one another and substrates indicated under conditions of service and application, as demonstrated by manufacturer based on testing and field experience.

B. Material Quality: Provide manufacturer's highest grade of the various high-performance coatings specified. Materials not displaying manufacturer's product identification are not acceptable.

1. Proprietary Names: Use of manufacturer's proprietary product names to designate colors or materials is not intended to imply that products named are required to be used to the exclusion of equivalent products of other manufacturers. Furnish manufacturer's material data and certificates of performance for proposed substitutions.

2.3 COLORS

A. Colors: As selected by Architect from manufacturer's full range.

PART 3 - EXECUTION

3.1 EXAMINATION

A. With Applicator present, examine substrates and conditions under which high-performance coatings will be applied, for compliance with coating application requirements.

1. Apply coatings only after unsatisfactory conditions have been corrected and surfaces to receive coatings are thoroughly dry.
2. Start of application is construed as Applicator's acceptance of surfaces within that particular area.

B. Coordination of Work: Review other Sections in which primers or other coatings are provided to ensure compatibility of total systems for various substrates. On request, furnish information on characteristics of specified finish materials to ensure compatible primers.

1. If a potential incompatibility of primers applied by others exists, obtain the following from the primer Applicator before proceeding:

a. Confirmation of primer's suitability for expected service conditions.
b. Confirmation of primer's ability to be top coated with materials specified.

2. Notify Architect about anticipated problems before using the coatings specified over substrates primed by others.

3.2 PREPARATION

A. General: Remove plates, machined surfaces, and similar items already in place that are not to be coated. If removal is impractical or impossible because of size or weight of item, provide surface-applied protection before surface preparation and coating.

1. After completing coating operations, reinstall items that were removed; use workers skilled in the trades involved.

B. Cleaning: Before applying high-performance coatings, clean substrates of substances that could impair bond of coatings. Remove oil and grease before cleaning.

1. Schedule cleaning and coating application so dust and other contaminates from cleaning process will not fall on wet, newly coated surfaces.

C. Surface Preparation: Clean and prepare surfaces to be coated according to manufacturer's written instructions for each substrate condition and as specified.

1. Cementitious Substrates: Prepare concrete, brick, concrete masonry block, and cement plaster surfaces to be coated. Remove efflorescence, chalk, dust, dirt, grease, oils, and release agents. Roughen as required to remove glaze. If hardeners or sealers have been used to improve curing, use mechanical methods to prepare surfaces.

    a. Use abrasive blast-cleaning methods if recommended by coating manufacturer.
    b. Determine alkalinity and moisture content of surfaces by performing appropriate tests. If surfaces are sufficiently alkaline to cause the finish paint to blister and burn, correct this condition before application. Do not coat surfaces if moisture content exceeds that permitted in manufacturer's written instructions.

D. Material Preparation: Carefully mix and prepare coating materials according to manufacturer's written instructions.

1. Maintain containers used in mixing and applying coatings in a clean condition, free of foreign materials and residue.
2. Stir materials before applying to produce a mixture of uniform density. Stir as required during application. Do not stir surface film into the material. Remove film and, if necessary, strain coating material before using.
3. Use only the type of thinners approved by manufacturer and only within recommended limits.

3.3 APPLICATION

A. General: Apply high-performance coatings according to manufacturer's written instructions.

1. Use applicators and techniques best suited for the material being applied.
2. Do not apply high-performance coatings over dirt, rust, scale, grease, moisture, scuffed surfaces, or conditions detrimental to forming a durable coating film.
3. Caulk all cracks / imperfections prior to application of primers and paint.
4. Coating colors, surface treatments, and finishes are indicated in the coating system descriptions.
5. Provide finish coats compatible with primers used.
6. The term "exposed surfaces" includes areas visible when permanent or built-in fixtures, convector covers, grilles, covers for finned-tube radiation, and similar components are in place. Extend coatings in these areas, as required, to maintain system integrity and provide desired protection.

    a. Coat surfaces behind movable equipment and furniture the same as similar exposed surfaces. Before final installation, coat surfaces behind permanently fixed equipment or furniture with prime coat only.
    b. Coat back sides of access panels, removable or hinged covers, and similar hinged items to match exposed surfaces.

B. Scheduling Coating: Apply first coat to surfaces that have been cleaned, pretreated, or otherwise prepared for coating as soon as practicable after preparation and before subsequent surface deterioration.

1. The number of coats and film thickness required is the same regardless of application method.

    a. Omit primer on metal surfaces that have been shop primed. Prime to all other previously painted surfaces.
    b. Do not apply succeeding coats until previous coat has cured as recommended by manufacturer.
    c. Where manufacturer's written instructions require sanding, sand between applications to produce a smooth, even surface.
    d. Allow sufficient time between successive coats to permit proper drying. Do not recoat surfaces until coating has dried to where it feels firm, does not deform or feel sticky under moderate thumb pressure, and application of another coat does not cause undercoat to lift or lose adhesion.

2. If undercoats or other conditions show through final coat, apply additional coats until cured film has a uniform coating finish, color, and appearance. Give special attention to edges, corners, crevices, welds, exposed fasteners, and similar surfaces to ensure that they receive a dry film thickness equivalent to that of flat surfaces.

C. Application Procedures: Apply coatings by brush, roller, spray, or other applicators according to manufacturer's written instructions.

1. Brush Application: Use brushes best suited for material applied and of appropriate size for the surface or item being coated.

a. Apply primers and first coats by brush unless manufacturer's written instructions permit using roller or mechanical applicators.
b. Brush out and work brush coats into surfaces in an even film.
c. Eliminate cloudiness, spotting, holidays, laps, brush marks, runs, sags, ropiness, or other surface imperfections. Neatly draw glass lines and color breaks.

2. Rollers: Use rollers of carpet, velvet back, or high-pile sheep's wool as recommended by manufacturer for the material and texture required.
3. Spray Equipment: Use mechanical methods to apply coating if permitted by manufacturer's written instructions and governing regulations.

a. Use spray equipment with orifice size recommended by manufacturer for material and texture required.
b. Apply each coat to provide the equivalent hiding of brush-applied coats.
c. Do not double back with spray equipment building-up film thickness of two coats in one pass, unless recommended by manufacturer.

D. Minimum Coating Thickness: Apply each material no thinner than manufacturer's recommended spreading rate. Provide total dry film thickness of the entire system as recommended by manufacturer.

E. Block Fillers: Apply block fillers to concrete masonry block at a rate to ensure complete coverage with pores filled.

F. Completed Work: Match approved Samples for color, texture, and coverage. Remove, refinish, or recoat work that does not comply with specified requirements.

3.4 CLEANING

A. Cleanup: At end of each workday, remove rubbish, empty cans, rags, and other discarded materials from Project site.

1. After completing coating application, clean spattered surfaces. Remove spattered coatings by washing, scraping, or other methods. Do not scratch or damage adjacent finished surfaces.

3.5 PROTECTION

A. Protect work of other trades, whether being coated or not, against damage from coating operation. Correct damage by cleaning, repairing, replacing, and recoating, as approved by Architect, and leave in an undamaged condition.

1. Provide "Wet Paint" signs to protect newly coated finishes. After completing coating operations, remove temporary protective wrappings provided by others to protect their work.
2. At completion of construction activities of other trades, touch up and restore damaged or defaced coated surfaces.

3.6 Paint Schedule: Provide the following paint systems for the various substrates indicated:

1. Exterior Iron: Surface Prep: SW14 or SW15
Primer:(1 coat) Kem Kromik Universal Metal Primer B50Z Series. (2.5 mils)
Two Coats: Pro Industrial Pre-Catalyzed Waterbased Urethane (2.2 – 4.4 Dry Mils/Coat)

2. Exterior Metal Doors/Frames:
Surface Prep: SW 14 or SW 15
Primer:(1 coat) Kem Kromik Universal Metal Primer B50Z Series. (2.5 mils)
Two Coats: Pro Industrial Pre-Catalyzed Waterbased Urethane (2.2 – 4.4 Dry Mils/Coat)

3) All Interior Wall Surfaces (excluding masonry):
Surface Prep: SW 8 or SW 12
Primer: (1 coat) ProMar 200 Zero VOC Latex primer, B28W2600 (1.4mils)
Two Coats: Pro Industrial Pre-Catalyzed Water Based Catalyzed Epoxy, K45/K46 Series. (1.5 Mils Dry/Coat)

4) Interior Drywall - Ceilings:
Surface Prep: SW 8 or SW 12
Primer: (1 coat) ProMar 200 Zero VOC Latex primer, B28W2600. (1.4mils)
Two Coats: Pro Industrial Pre-Catalyzed Water Based Catalyzed Epoxy, K45/K46 Series. (1.5 Mils Dry/Coat)

5) Interior Metal:
Surface Prep: SW 15 or SW 12
Primer: (1 coat) Kem Kromik Universal Metal Primer, B50Z Series. (2.5 mils)
Two Coats: Pro Industrial Waterbased Alkyd Urethane, B53 Series (1.4-1.7 Dry Mils/Coat)

Note: Refer to Finish Schedule for a complete list of colors.

NOTE: All exterior exposed steel structure shall be painted with a high-performance coating/system as follows:

1.EXTERIOR FERROUS-METAL PRIMER: Factory-formulated primer for exterior applications.
a. Tnemec Series N69 Hi-Build Epoxoline II, applied at a DFT 3.0 to 4.0 mils. Color to slightly contract with finish coat.
b. PPG Coatings, Coraflon ADS Epoxy Primer, applied at a DFT 2.0 to 3.0 mils, Color to slightly contract with finish coat.

2.EXTERIOR FINISH COAT: Exterior Ferrous-Metal Finish Coats – APPLY TWO FINISH COATS: Factory-formulated finish for exterior applications.
a. Tnemec Series 1070 Fluoronar, applied at a DFT 2.5 to 3.0 mils. Custom color to match architect's sample.

b. PPG Coatings; Coraflon ADS, applied at a DFT 2.5 to 3.0 mils. Custom color to match architect's sample.

3. Install in strict accordance with manufacturer's instructions.

END OF SECTION 099600

SECTION 101150 – FIXED GLASS MARKERBOARDS

PART 1 - GENERAL

1.1 RELATED DOCUMENTS

A. Drawings and general provisions of the Contract, including General and Supplementary Conditions and Division 1 Specification Sections, apply to this Section.

1.2 SUMMARY

A. This Section includes the following:

1. Fixed, glass, magnetic dry-erase markerboards

1.3 SUBMITTALS

A. Product Data: For each type of visual display board indicated, including installation instructions.

B. Manufacturer's Certification: Submit manufacturer's certification that materials comply with specified requirements and are suitable for intended application.

C. Cleaning Instructions: Submit manufacturer's cleaning instructions.

D. Shop Drawings: For each type of visual display board required.

1. Include dimensioned elevations. Show location of joints between individual panels where unit dimensions exceed maximum panel length.
2. Include sections of typical trim members.
3. Show anchors, grounds, reinforcement, accessories, layout, and installation details.

E. Samples for Initial Selection: Manufacturer's color charts showing the full range of colors and textures available for the following:

1. Markerboards: Actual sections of finishes for each type of markerboard required.

F. Samples for Verification: Of the following products, showing color and texture or finish selected. Where finishes involve normal color and texture variations, include Sample sets showing the full range of variations expected. Prepare Samples from the same material to be used for the Work.

1. Glass Markerboards: Sample panels not less than 8-1/2 by 11 inches (215 by 280 mm), mounted on the substrate indicated for the final Work. Include a panel for each type, color, and texture required.

2. Aluminum Trim and Accessories: Samples of each finish type and color, on 6-inch-(150-mm-) long sections of extrusions and not less than 4-inch (100-mm) squares of sheet or plate. Include Sample sets showing the full range of color variations expected.

1.4 QUALITY ASSURANCE

A. Source Limitations: Obtain visual display boards through one source from a single manufacturer.

B. Product Options: Drawings indicate size, profiles, and dimensional requirements of visual display boards and are based on the products indicated. Other manufacturers' products with equal performance characteristics may be considered. Refer to Division 1 Section "Substitutions."

1. Do not modify intended aesthetic effects, as judged solely by Architect, except with Architect's approval and only to the extent needed to comply with performance requirements. Where modifications are proposed, submit comprehensive explanatory data to Architect for review.

1.5 DELIVER, STORAGE, AND HANDLING

A. Delivery and Acceptance Requirements: Deliver materials to site in manufacturer’s original, unopened containers and packaging, with labels clearly identifying product name and manufacturer.

B. Storage and Handling Requirements:

1. Store and handle materials in accordance with manufacturer’s instructions.
2. Keep materials in manufacturer’s original, unopened containers and packaging until installation.
3. Store materials in clean, dry area indoors.
4. Protect materials during storage, handling, and installation to prevent damage.

1.6 WARRANTY

A. Markerboard Warranty: Submit a written warranty executed by manufacturer agreeing to replace markerboards in the event of defects in material and workmanship within the specified warranty period, provided the manufacturer's written instructions for handling, installation, protection, and maintenance have been followed.

1. Warranty Period: 20 years from date of Substantial Completion.

PART 2 - PRODUCTS

2.1 MANUFACTURERS

A. Manufacturer: Subject to compliance with requirements, provide products by one of the following:

1. Basis of Design: "Float" by Clarus

2. Claridge Glass Whiteboard

3. Peter Pepper Products – Glass Writing Surfaces

2.2 MATERIALS

A. Size: As indicated on drawings.

B. Type: Frameless, concealed mount.

C. Components (back to front).

1. Magnetic Backer: 22-gauge galvanized steel with high-bond adhesive covering entire surface to permanently bond steel to glass.

2. Finish: enamel baked-on coating – color to be selected from manufacturer's full line of available colors, including custom color.

3. Glass: ¼" thick, clear, tempered, safety-rated, low-iron glass

2.3 ACCESSORIES

A. Set of 4 dry-erase marker pens (black, blue, red, green) and eraser with magnetic organizer.

B. Magnet Indicators: Four round magnet indicators by board manufacturer.

C. Aluminum marker tray by board manufacturer.

D. All mounting hardware included.

2.4 FINISHES

A. General: Comply with NAAMM's "Metal Finishes Manual for Architectural and Metal Products" for recommendations relative to applying and designating finishes.

B. Finish designations prefixed by AA conform to the system established by the Aluminum Association for designating aluminum finishes.

C. Class II, Clear Anodic Finish: AA-M12C22A31 (Mechanical Finish: nonspecular as fabricated; Chemical Finish: etched, medium matte; Anodic Coating: Architectural Class II, clear coating 0.010 mm or thicker) complying with AAMA 607.1.

PART 3 - EXECUTION

3.1 EXAMINATION

A. Examine wall surfaces, with Installer present, for compliance with requirements and other conditions affecting installation of visual display boards.

1. Surfaces to receive markerboards shall be free of dirt, scaling paint, and projections or depressions that would affect smooth, finished surfaces of markerboards.
2. Do not proceed with installation until unsatisfactory conditions have been corrected.

3.2 INSTALLATION

A. Install markerboards in accordance with manufacturer's instructions at locations indicated on the drawings.

B. Install units to keep perimeter lines straight, plumb, and level. Provide grounds, clips, backing materials, adhesives, brackets, anchors, trim, and accessories necessary for complete installation.

C. Coordinate Project-site-assembled units with grounds, trim, and accessories. Join parts with a neat, precision fit.

3.3 ADJUSTING AND CLEANING

A. Verify that accessories required for each unit have been properly installed and that operating units function properly.

B. Clean units according to manufacturer's written instructions.

C. Do not use harsh cleaning materials or methods that could damage the surface.

END OF SECTION 101150

SECTION 101420 – UNFRAMED INTERIOR ROOM SIGNS

PART 1 GENERAL

.1 SUMMARY

A. Related Documents: Provisions established within the General and Supplementary Conditions of the Contract, Division 1 - General Requirements, and the Drawings are collectively applicable to this Section.

B. Section Includes:
   1. Accessible Restroom Signage
   2. Exit Identification
   3. Emergency Evacuation Maps/ Elevator ID
   4. Stair & Stairwell Signage
   5. Room Identification Signage

.2 QUALITY ASSURANCE

A. Supplier: Obtain all signage products in this and other signage specifications through a single supplier from a single manufacturer.

B. Regulatory Requirements: Products shall meet requirements of the Americans With Disabilities Act Accessibility Guidelines (ADAAG) and local amendments and modifications.

C. Installer: Installation shall be performed by installer specialized and experienced in work similar to that required for this project.

D. Sign supplier to provide ONLINE REORDER website for use by owner to order additional signs. Reorder website to include sign descriptions, sign drawings & sign cost.

.3 SUBMITTALS

A. Submit in accordance with requirements of Division 1.

B. Product Data: Submit product data for specified products. Include material details for each sign specified.

C. Shop Drawings: Submit shop drawings showing layout, profiles, and product components, including dimensions, anchorage, and accessories.

D. Samples: Submit supplier's standard color chart for selection purposes and selected colors for verification purposes.

E. Installation: Submit supplier's installation instructions.

F. Closeout Submittals:
   1. Submit operation and maintenance data for installed products, including precautions against harmful cleaning materials and methods.
   2. Submit warranty documents specified herein.

.4 DELIVERY, STORAGE, AND HANDLING

A. Comply with requirements of Division 1.
   1. Comply with manufacturer's ordering instructions and lead time requirements to avoid construction delays.
   2. Deliver products in manufacturer's original, unopened, undamaged containers with identification labels intact.

3. Store products protected from weather, temperature, and other harmful conditions as recommended by supplier.
4. Handle products in accordance with manufacturer's instructions.

.5 WARRANTY

A. Project Warranty: Comply with requirements of Division 1.
B. Manufacturer's Warranty: Submit manufacturer's standard warranty document executed by authorized company official.
   1. Warranty Period: One year from product ship date.

PART 2 PRODUCTS

.1 SIGNAGE SYSTEMS

A. Acceptable Manufacturers:
B. The following manufacturer and product is used as a basis of design and are Prior Approved:
   1. ASI Signage Innovations, 520 Commerce Pt Harahan, Louisiana 70123;
   2. (504) 704 1000 telephone; (504) 704 1006 facsimile.
      Contact: Ercelle Anthony, (225) 229-5984 Ercelle.Anthony@asisignage.com

   3. Acceptable Product: ASI InTouch III Unframed Plaques

   4. Additional manufacturers shall submit equal product data 10 days before advertised bid date for architect's review. The architect has sole discretion to accept or deny substitutions.

.2 SIGN MATERIALS

A. Sign Face: High impact cast matte acrylic, 3D printed text and braille. Utilize direct to substrate UV-LED flatbed printer and silicon-based print head. UV-LED curable inks with full CMYK & white ink instantly cured for precise ADA compliance.
B. Tactile Graphics and Text: Provide tactile copy and grade 2 Braille raised 1/32 inch minimum from plaque surface using manufacturer's 3D printed process.
   1. Provide lettering and graphics precisely formed, uniformly opaque to comply with relevant ADA regulations and requirements indicated for size, style, spacing, content, position, and colors. Text should have matte gloss level and square shoulders.
   2. Colors: Background color is second surface painted. Text Color is integrally colored and printed first surface with logo. Silkscreened text is not allowed.
   3. Cast acrylic sheet to be laser cut to shape after painting to allow for clear polished edges.
   4. First surface painted signs and sandblasted sign faces are not allowed.

C. Sign Type Description

   1. Face Depth: 1/4" inch thickness Clear Acrylic with Flat Polished Edges. Subsurface painted.
   2. Surface Texture: Smooth Texture with non glare finish.

3. Letter style[s], and size[s] and layout position: [Specify from manufacturer's standard letter styles and color charts.]
4. Raised text is integrally colored and 3D printed into face background.
5. ¼"thick Painted Matte Clear Acrylic Panel.
6. Text schedule: [Verify correct capitalization.]
7. Corner Shape: Square
8. Quantity: See schedule.
9. Sign Types (typical)
   a. Sign Type I- 10"h x 6"w Restrooms entrances as required.
   b. Sign Type II – 4"h x 4"w Exit as required by local codes.
   c. Sign Type III – 4"h x 8"w Auxiliary Room doors.
   d. Sign Type IV -6" x 6" Office and Classroom door entrances.
   e. Sign Type V – 8-1/2"h x 8-1/2"w Conference Room with In Use Slider
   f. Sign Type VI- 10"h x 6"w Stair entrances.
   g. Sign Type VII– 4" x 8" In Case of Fire.
10. Include (1) Stairwell sign per stair landing. Sign to be 18"h x 10"w x 1/8"thick, 3D Printed, unframed.
11. Include (1) Evacuation Plan signs per floor 10"h x 16"w x ¼"thick acrylic with 3D printed map and text, full color print; unframed.

.3 INSTALLATION METHOD

A. Tape Mount or Screw Mount with counter sunk holes and silicone. Signs on glass to have vinyl backer. All others to be screw mounted. Backer to have countersunk holes with face piece tape mounted over backer to conceal mounting.

.4 FABRICATION - GENERAL

A. General: Comply with requirements indicated for materials, thicknesses, finishes, colors, designs, shapes, sizes, and details of construction.
B. Preassemble signs in the shop to the greatest extent possible to minimize field assembly. Disassemble signs only as necessary for shipping and handling limitations. Clearly mark units for reassembly and installation, in a location not exposed to view after final assembly.
C. Conceal fasteners if possible; otherwise, locate fasteners to appear inconspicuous.
D. Form panels to required size and shape. Comply with requirements indicated for design, dimensions, finish, color, and details of construction.
E. Coordinate dimensions and attachment methods to produce message panels with closely fitting joints. Align edges and surfaces with one another in the relationship indicated.

PART 3 EXECUTION

.1 EXAMINATION

A. Site Verification of Conditions: Verify installation conditions previously established under other sections are acceptable for product installation in accordance with manufacturer's instructions.
B. Scheduling of installation by Owner or its representative implies that substrate and conditions are prepared and ready for product installation. Proceeding with installation implies installer's acceptance of substrate and conditions.

.2 INSTALLATION

A. Install product in accordance with supplier's instructions.

B. Install product in locations indicated using mounting methods recommended by sign manufacturer and free from distortion, warp, or defect adversely affecting appearance.

C. Install product level, plumb, and at heights indicated.

D. Install product at heights to conform to Americans with Disabilities Act Accessibility Guidelines (ADAAG) and applicable local amendments and regulations.

E. Install signs within the following tolerances and in accordance with manufacturer's recommendations:

1. Interior Signs: Within 1/4 inch vertically and horizontally of intended location.

.3 CLEANING, PROTECTION, AND REPAIR

A. Repair scratches and other damage which might have occurred during installation. Replace components where repairs were made but are still visible to the unaided eye from a distance of 5 feet.

B. Remove temporary coverings and protection to adjacent work areas. Clean installed products in accordance with manufacturer's instructions prior to Owner's acceptance. Remove construction debris from project in accordance with provisions in Division 1.

.4 SIGN SCHEDULE

A. Schedule: Refer to signage schedule and Drawings for sizes, locations, and layout of signage types, sign text copy, and graphics.

END OF SECTION 101420

SECTION 102113 - TOILET COMPARTMENTS

PART 1 - GENERAL

1.1 RELATED DOCUMENTS

A. Drawings and general provisions of the Contract, including General and Supplementary Conditions and Division 1 Specification Sections, apply to this Section.

1.2 SUMMARY

A. This Section includes toilet compartments and screens as follows:

1. Type: Phenolic core.
2. Compartment Style: Overhead braced and floor anchored.

1.3 SUBMITTALS

A. Product Data: For each type and style of toilet compartment and screen specified. Include details of construction relative to materials, fabrication, and installation. Include details of anchors, hardware, and fastenings.

B. Shop Drawings: For fabrication and installation of toilet compartment and screen assemblies. Include plans, elevations, sections, details, and attachments to other work.

1. Show locations of reinforcement and cutouts for compartment-mounted toilet accessories.

C. Samples for Initial Selection: Manufacturer's color charts consisting of sections of actual units showing the full range of colors, textures, and patterns available for each type of compartment or screen indicated.

D. Samples for Verification: Of each compartment or screen color and finish required, prepared on 6-inch- (150-mm-) square Samples of same thickness and material indicated for Work.

1.4 WARRANTY

A. Furnish 15 year limited warranty for the entire toilet partition system from the manufacturer for panels, doors, and stiles against breakage, corrosion, delamination, and defects in factory workmanship. This warranty shall include hardware. In addition, the panels, pilasters, an doors shall be warranted for a 25 year period against breakage, corrosion, and delamination; and replaced without charge, excluding labor.

B. Furnish one year guarantee from the installer against defects in material and workmanship for stainless steel door hardware and mounting brackets.

1.5 PROJECT CONDITIONS

A. Field Measurements: Verify dimensions in areas of installation by field measurements before fabrication and indicate measurements on Shop Drawings. Coordinate fabrication schedule with construction progress to avoid delaying the Work.

1. Established Dimensions: Where field measurements cannot be made without delaying the Work, establish dimensions and proceed with fabricating units without field measurements. Coordinate supports, adjacent construction, and fixture locations to ensure actual dimensions correspond to established dimensions.

PART 2 - PRODUCTS

2.1 MANUFACTURERS

A. Manufacturers: Subject to compliance with requirements, provide products by one of the following:

1. Columbia Partitions – Super HD-8433-BR by Partition Systems, Inc. or equal by the following:
2. Accurate Partitions Corporation.
3. Bradley.

2.2 MATERIALS

A. General: Provide materials that have been selected for surface flatness and smoothness. Exposed surfaces that exhibit pitting, seam marks, roller marks, stains, discolorations, telegraphing of core material, or other imperfections on finished units are unacceptable.

B. Solid-Plastic, Phenolic Core: Solid phenolic core with melamine facing on both sides, fused to substrate without visible glue line or seam. Provide units with eased edges and with minimum 3/4-inch- (19-mm-) thick doors, divider panels and pilasters and minimum 3/4-inch- (19-mm-) thick panels and screens.

1. Color: Color to be selected from the full line of available colors

2. Pilaster Shoes: ASTM A 167, Type 302/304 Stainless Steel, minimum 4" high, 18 gauge, finished with #3 Directional Polish, attached with Stainless Steel Through Bolts.

3. Continuous Brackets: Full High (57.5") Extruded 6063-T5 Aluminum with a Satin Anodized finish. The minimum weight shall be 1.685 pounds per lineal foot. Inside of opening of Bracket shall be 50" for panels, .75" for pilasters. All holes for mounting to wall and panel/pilaster shall be pre-drilled. Holes are to be spaced at 9" O.C. along the full length of the Bracket for a total of fourteen (14) holes for

mounting to the wall and seven (7) holes for mounting to the panel/pilaster. Each Bracket is to have minimum wall thickness of. 125". Each Bracket is to be packaged in a separate poly tube, and is to be labeled by stock number and manufacturer.

4. Continuous Hinge: Continuous 14 Gauge Stainless Steel Hinge (57.5"). Hinge shall be 3" wide and shall have five (5) Stainless Steel wire springs for self-closing action. Pivot pin shall be ,250" in diameter, and shall be made of Type 302/304 Stainless Steel. Hinges shall provide emergency access by lifting the door. Hinges shall be pre-drilled for mounting to door and pilaster. Mounting holes shall be at 9" O.C. for Through-Bolting with Stainless Steel fasteners. Each Hinge is to be packaged in a separate poly tube, and is to be labeled by stock number, manufacturer, and left or right hand.

5. Emergency Access Strike and Keeper: Heavy Duty Cast Stainless Steel with a Satin finish. The Strike and Keeper shall he 2.50" high, with the mounting holes at 1.50" O.C., and the wall thickness shall be a minimum of. 125". The Strike and Keeper shall have a slot, .80" X .29" on the top and bottom of the Strike and Keeper, to receive the Slide Latch Bar and to allow for emergency access by lifting the door. The Strike and Keeper shall have an integral rubber bumper door stop. The stock number shall he molded into the back of the Strike and Keeper for ease in identification. Each Strike and Keeper shall be packaged in a separate poly bag, and is to be labeled by stock number and manufacturer. Furnish one per door.

6. Slide Latch: Heavy Duty Cast Stainless Steel with a Satin finish. The Slide Latch shall be surface mounted. The slide bar shall be .150" thick, 1.020" wide and 3.720" long. Latch shall have an internal Stainless Steel buffering spring to prevent damage when door is inadvertently slammed against the Latch. Mounting holes are to be spaced at 3.50" O.C.. Latch knob is to be riveted to the slide bar and then welded to insure that the knob will not come off. The stock number is to molded into the back of the Slide Latch for ease in identification. Each Slide Latch shall be packaged in a separate poly bag, and is to be labeled by stock number and manufacturer. Furnish one per door.

7. Coat Hook: Heavy Duty Cast Stainless Steel with a Satin finish. Coat Hook and Bumper shall be 2.340" high, 1.230" wide and shall protrude out from the door 3.05". The hook portion shall have a finished diameter of .250". The stock number shall be molded into the back of the Coat Hook and Bumper for ease in identification. Each Coat Hook and Bumper shall be packaged in a separate poly bag, and is to be labeled by stock number and manufacturer. Furnish one per door.

8. Door Stop: Heavy Duty Cast Stainless Steel with a Satin finish. Plated Zarnac Door Stops are unacceptable. Door stop shall have a 2.125" base diameter and shall protrude 1.80" from the wall. The bumper at the end of the Door Stop shall be ,250" thick. The diameter of the shaft shall he .6875". The stock number shall be molded into the back of the Door Stop for ease in identification. Each Door Stop shall be packaged in a separate poly bag, and is to be labeled by stock number and manufacturer. Furnish one for each Disabled Accessible door.

9. Pull Handle: Heavy Duty Cast Stainless Steel with a Satin finish. Plated Zamac Door Pulls are unacceptable. Pull Handle shall protrude from the face of the door, 940"

and shall be 4.735" long. The Pull Handle shall have mounting holes drilled and tapped for 10/24 threads at 3.50" O.C.. The Pull Handle shall be .655" wide and shall be mounted back to back with the Slide Latch. The stock number shall be molded into the back of the Pull Handle for ease in identification. Each Pull Handle shall be packaged in a separate poly bag, and is to be labeled by stock number and manufacturer. Furnish one for each Disabled Accessible door.

10. Overhead Bracing (Headrail): Continuous Heavy Duty Extruded 6063-T5 Aluminum Headrail with Anti-Grip profile. Headrail shall have integral reinforcing channel and curtain track. Headrail shall have a Satin Anodized finish. Provide Headrail Comer Brackets, Wall Brackets, and Headrail End Caps as required. The Headrail and Headrail Brackets shall have a minimum wall height of 2". The minimum wall thickness of the Headrail and Headrail Brackets shall be.125". Each Headrail Bracket is to be packaged in a separate poly bag, and is to be labeled by stock number and manufacturer.

11. Anchorages and Fasteners: All Fasteners shall be Chrome Plated Brass with theft proof heads, Through-Bolted noted otherwise. No chrome-plated steel will be acceptable.

2.3 FABRICATION

A. General: Provide standard doors, panels, screens, and pilasters fabricated for compartment system. Provide units with cutouts and drilled holes to receive compartment-mounted hardware, accessories, and grab bars, as indicated.

B. Overhead-Braced-and-Floor-Anchored Compartments: Provide manufacturer's standard corrosion-resistant supports, leveling mechanism, fasteners, and anchors at pilasters to suit floor conditions. Make provisions for setting and securing continuous head rail at top of each pilaster. Provide shoes at pilasters to conceal supports and leveling mechanism.

C. Doors: Unless otherwise indicated, provide 24-inch- (610-mm-) wide in-swinging doors for standard toilet compartments and 36-inch- (914-mm-) wide out-swinging doors with a minimum 32-inch- (813-mm-) wide clear opening for compartments indicated to be handicapped accessible.

PART 3 - EXECUTION

3.1 INSTALLATION

A. General: Comply with manufacturer's written installation instructions. Install units rigid, straight, plumb, and level. Provide clearances of not more than 1/2 inch (13 mm) between pilasters and panels and not more than 1 inch (25 mm) between panels and walls. Secure units in position with manufacturer's recommended anchoring devices.

1. Secure panels to walls and panels with not less than 2 stirrup brackets attached near top and bottom of panel. Locate wall brackets so holes for wall anchors occur in masonry or tile joints. Align brackets at pilasters with brackets at walls.

B. Overhead-Braced-and-Floor-Anchored Compartments: Secure pilasters to floor and level, plumb, and tighten. Secure continuous head rail to each pilaster with not less than 2 fasteners. Hang doors and adjust so tops of doors are parallel with overhead brace when doors are in closed position.

C. Hardware Adjustment: Adjust and lubricate hardware according to manufacturer's written instructions for proper operation. Set hinges on in-swinging doors to return to fully closed position when unlatched. Set hinges on out-swinging doors and swing doors in entrance screens to return to fully closed position.

D. Provide final protection and maintain conditions that ensure toilet compartments and screens are without damage or deterioration at the time of Substantial Completion.

END OF SECTION 102113

SECTION 102226 - FOLDING GLASS-PANEL PARTITIONS

PART 1 - GENERAL

1.1 RELATED DOCUMENTS

A. Drawings and general provisions of the Contract, including General and Supplementary Conditions and Division 01 Specification Sections, apply to this Section.

1.2 SUMMARY

A. Section includes manually operated, glass-panel partitions.

B. Coordinate with specification section 102239.

1.3 DEFINITIONS

A. STC: Sound Transmission Class.

1.4 PREINSTALLATION MEETINGS

A. Preinstallation Conference: Conduct conference at Project site.

1.5 ACTION SUBMITTALS

A. Product Data: For each type of product.

B. Shop Drawings: For operable glass-panel partitions.
   1. Include plans, elevations, sections, details, numbered panel installation sequence, and attachments to other work.
   2. Indicate stacking and operating clearances. Indicate location and installation requirements for hardware and track, blocking, and direction of travel.

C. Samples for Verification: For each type of exposed material, finish, covering, or facing, prepared on Samples of size indicated below:
   1. Panel Edge Material: Not less than 3 inches (75 mm) long.
   2. Glass: Units 12 inches (300 mm) square.
   3. Hardware: One of each exposed door-operating device.

1.6 INFORMATIONAL SUBMITTALS

A. Coordination Drawings: Reflected ceiling plans, drawn to scale, on which the following items are shown and coordinated with each other, using input from installers of the items involved:
   1. Partition track, track supports and bracing, switches, turning space, and storage layout.
   2. Suspended ceiling components.
   3. Structural members to which suspension systems are attached.
   4. Size and location of initial access modules for acoustical tile.
   5. Items penetrating finished ceiling, including the following:
      a. Lighting fixtures.
      b. HVAC ductwork, outlets, and inlets.
      c. Speakers.

d. Sprinklers.
e. Smoke detectors.
f. Access panels.

6. Plenum acoustical barriers.

B. Setting Drawings: For embedded items and cutouts required in other work, including support-beam, mounting-hole template.

C. Qualification Data: For qualified Installer.

D. Product Certificates: For each type of operable glass-panel partition.

E. Product Test Reports: For each operable glass-panel partition, for tests performed by a qualified testing agency.

F. Sample Warranty: For manufacturer's special warranty.

1.7 CLOSEOUT SUBMITTALS

A. Operation and Maintenance Data: For operable glass-panel partitions to include in maintenance manuals.

1. In addition to items specified in Section 01 78 23 "Operation and Maintenance Data," include the following:
   a. Panel finish and finishes for exposed trim and accessories. Include precautions for cleaning materials and methods that could be detrimental to finishes and performance.
   b. Seals, hardware, track, track switches, carriers, and other operating components.

1.8 QUALITY ASSURANCE

A. Installer Qualifications: An entity that employs installers and supervisors who are trained and approved by manufacturer.

1.9 DELIVERY, STORAGE, AND HANDLING

A. Protectively package and sequence panels in order for installation. Clearly mark packages and panels with numbering system used on Shop Drawings. Do not use permanent markings on panels.

1.10 WARRANTY

A. Special Warranty: Manufacturer agrees to repair or replace components of operable glass-panel partitions that fail in materials or workmanship within specified warranty period.

1. Failures include, but are not limited to, the following:
   a. Faulty operation of operable glass-panel partitions.
   b. Deterioration of metals, metal finishes, and other materials beyond normal use.
2. Warranty Period: Two years from date of Substantial Completion.

PART 2 - PRODUCTS

2.1 PERFORMANCE REQUIREMENTS

A. Acoustical Performance: Provide operable glass-panel partitions tested by a qualified testing agency for the following acoustical properties according to test methods indicated:
   1. Sound-Transmission Requirements: Operable glass-panel partition assembly tested for laboratory sound-transmission loss performance according to ASTM E90, determined by ASTM E413, and rated for not less than the STC indicated.

2.2 OPERABLE GLASS PANELS

A. Operable Glass Panels: Aluminum-framed glass-panel partition system, including panels, seals, suspension system, operators, and accessories.
   1. Basis-of-Design Product: Subject to compliance with requirements, provide Moderco, Inc – Crystal Glass Wall; or a comparable product by one of the following:
      a. Modernfold, Inc.

B. Panel Operation: Series of individual flat panels manually operated and manually activated, top supported with automatic top and bottom seals.

C. Panel Construction: Nominal 4-inch (100 mm) thick panels in manufacturer's standard 48-inch (1220 mm) widths. All panel horizontal and vertical framing members shall be fabricated from aluminum extrusions and mechanically fastened. Frame shall be designed to minimize exposure on face of panels.
   1. Factory-Glazed Fabrication: Glaze operable glass panels in the factory where practical and possible for applications indicated. Comply with manufacturer's written instructions and with requirements in Section 08 80 00 "Glazing."

D. Glass and Glazing: As follows:
   1. Safety Glass Standard for Partition Panels: Glass products complying with testing requirements in 16 CFR 1201, Category II, or ANSI Z97.1, Class A.
   2. Glass: Manufacturer's standard safety glass and glass assemblies as indicated and complying with the following:
      a. Tempered Glass: ASTM C1048, Kind FT (fully tempered), Type I (transparent flat glass), Class 1 (clear), Quality-Q3.
         1) Spacer: Manufacturer's standard spacer construction and material.
      b. Glass Thickness: In locations indicated on Drawings: 1) 5/16-inch (8 mm).
         2) 3/8-inch (9.5 mm).
   3. Glazing System: Manufacturer's standard factory-glazing system.

E. Dimensions: Fabricate operable glass-panel partitions to form an assembled system of dimensions indicated and verified by field measurements.
   1. Panel Width: Standard widths.

F. STC: Not less than 51.

G. Panel Closure:
   1. Final Closure: Horizontally expanding panel edge with removable crank.

H. Panel Frame Finishes:
   1. Aluminum: Clear anodized.

I. Pass Doors:
   1. Single Pass Doors: Matching pass door same thickness and appearance as the panels. ADA-compliant pass door equipped with non-locking lever latch. No threshold will be permitted.
   2 Hardware: Lever Handle (Both sides with lock).

2.3 SEALS

A. Description: Seals that produce operable glass-panel partitions complying with performance requirements and the following:
   1. Manufacturer's standard seals unless otherwise indicated.
   2 Seals made from materials and in profiles that minimize sound leakage.
   3. Seals fitting tight at contact surfaces and sealing continuously between adjacent panels and between operable glass-panel partition perimeter and adjacent surfaces, when operable glass-panel partition is extended and closed.

B. Vertical Interlocking Sound Seals Between Panels: Extruded aluminum astragals with interlocking convex/concave resilient quad-lip gaskets. Rigid plastic astragals or astragals with gaskets on only one panel edge are not acceptable.

C. Horizontal Top and Bottom Seals shall be automatic operable seals providing 7/8- inch (22 mm) operating clearance with an operating range of +9/16-inch (14 mm) to -3/8-inch (9.5 mm). Seals shall operate automatically without tools or cranks and shall extend as panels are positioned. Fixed (non-operating) seals at top or bottom of panels are not acceptable.

2.4 SUSPENSION SYSTEMS

A. Tracks: Extruded aluminum with a minimum wall thickness of 0.235-inches (6 mm). Incorporate cast aluminum or mitered intersections, switches, and curves in stacking area. Provide alignment pins for track, intersections, and switches and curves insuring both fit and roller surface integrity.
   1. Exposed track soffit: Factory-finished aluminum with white powder coat.

B. Carriers: Two stainless steel trolleys with vinyl roller surfaces. Trolley design incorporates eight (8) wheels of varying dimensions that permit panels to traverse L, T, and X intersections without mechanical switching, on all panels.

C. Aluminum Finish: Mill finish or manufacturer's standard, factory-applied, decorative finish unless otherwise indicated.

PART 3 - EXECUTION

3.1 EXAMINATION

A. Examine flooring, floor levelness, structural support, and opening, with Installer present, for compliance with requirements for installation tolerances and other conditions affecting performance of operable glass-panel partitions.

B. Proceed with installation only after unsatisfactory conditions have been corrected.

3.2 INSTALLATION

A. Install operable glass-panel partitions and accessories after other finishing operations, including painting, have been completed in area of partition installation.

B. Install panels in numbered sequence indicated on Shop Drawings.

C. Broken, cracked, chipped, deformed, or unmatched panels are not acceptable.

D. Broken, cracked, deformed, or unmatched gasketing or gasketing with gaps at butted ends is not acceptable.

E. Light-Leakage Test: Temporarily opacify glass areas of panels. Illuminate one side of partition installation and observe vertical joints and top and bottom seals for voids. Adjust partitions for alignment and full closure of vertical joints and full closure along top and bottom seals.

3.3 ADJUSTING

A. Adjust operable glass-panel partitions, hardware, and other moving parts to function smoothly, and lubricate as recommended by manufacturer.

B. Verify that safety devices are properly functioning.

3.4 MAINTENANCE SERVICE

A. Maintenance Service: Beginning at Substantial Completion, maintenance service shall include 12 months' full maintenance by manufacturer's authorized service representative. Include quarterly preventive maintenance, repair or replacement of worn or defective components, lubrication, cleaning, and adjusting as required for proper operable-partition operation. Parts and supplies shall be manufacturer's authorized replacement parts and supplies.

3.5 DEMONSTRATION

A. Engage a factory-authorized service representative to train Owner's maintenance personnel to adjust, operate, and maintain operable glass-panel partitions.

END OF SECTION 102226

SECTION 102239 FOLDING PANEL PARTITIONS

PART 1 - GENERAL

1.1 SUMMARY

A. Section Includes:
   1. Manually operated, paired panel acoustical partitions.
   2. Refer to and coordinate with specification section 102226.

1.2 DEFINITIONS

A. STC: Sound Transmission Class.

1.3 ACTION SUBMITTALS

A. Product Data: For each type of product.

B. Shop Drawings: For operable panel partitions.
   1. Include plans, elevations, sections, attachment details, and numbered panel installation sequence.
   2. Indicate stacking and operating clearances. Indicate location and installation requirements for hardware and track, blocking, and direction of travel.

C. Samples for Verification: For each type of exposed material, finish, covering, or facing, prepared on Samples of size indicated below:
   1. Textile Facing Material: Full width by not less than 36-inch- (914-mm-) long section of fabric from dye lot to be used for the Work, with specified treatments applied. Show complete pattern repeat.
   2. Panel Facing Material: Manufacturer's standard-size unit, not less than 3 inches (75 mm) square.
   3. Panel Edge Material: Not less than 3 inches (75 mm) long.
   4. Hardware: One of each exposed door-operating device.

1.4 INFORMATIONAL SUBMITTALS

A. Coordination Drawings: Reflected ceiling plans, drawn to scale, on which the following items are shown and coordinated with each other, using input from installers of the items involved:
   1. Partition track, track supports and bracing, switches, turning space, and storage layout.
   2. Suspended ceiling components.
   3. Structural members to which suspension systems will be attached.
   4. Size and location of initial access modules for acoustical tile.
   5. Items penetrating finished ceiling including the following:
      a. Lighting fixtures.
      b. HVAC ductwork, outlets, and inlets.
      c. Speakers.
      d. Sprinklers.
      e. Smoke detectors.
      f. Access panels.
   6. Plenum acoustical barriers.

B. Setting Drawings: For embedded items and cutouts required in other work, including support-beam, mounting-hole template.

C. Qualification Data: For Installer.

D. Product Certificates: For each type of operable panel partition.
   1. Include approval letter signed by manufacturer acknowledging Owner-furnished panel facing material complies with requirements.

E. Product Test Reports: For each operable panel partition, for tests performed by a qualified testing agency.

F. Sample Warranty: For manufacturer's special warranty.

1.5 CLOSEOUT SUBMITTALS

A. Operation and Maintenance Data: For operable panel partitions to include in maintenance manuals.
   1. In addition to items specified in Section 01 78 23 "Operation and Maintenance Data," include the following:
      a. Panel finish facings and finishes for exposed trim and accessories. Include precautions for cleaning materials and methods that could be detrimental to finishes and performance.
      b. Seals, hardware, track, track switches, carriers, and other operating components.
      c. Electric operator and controls.

1.6 MAINTENANCE MATERIAL SUBMITTALS

A. Furnish extra materials, from the same production run, that match products installed and that are packaged with protective covering for storage and identified with labels describing contents.
   1. Panel Finish-Facing Material: Furnish full width in quantity to cover both sides of two panels when installed.

1.7 QUALITY ASSURANCE

A. Installer Qualifications: An entity that employs installers and supervisors who are trained and approved by the manufacturer.

1.8 DELIVERY, STORAGE, AND HANDLING

A. Protectively package and sequence panels in order for installation. Clearly mark packages and panels with numbering system used on Shop Drawings. Do not use permanent markings on panels.

1.9 WARRANTY

A. Special Warranty: Manufacturer agrees to repair or replace components of operable panel partitions that fail in materials or workmanship within specified warranty period.
   1. Failures include, but are not limited to, the following:
      a. Faulty operation of operable panel partitions.
      b. Deterioration of metals, metal finishes, and other materials beyond

normal use.

2. Warranty Period: Five years from date of Substantial Completion.

PART 2 - PRODUCTS

2.1 PERFORMANCE REQUIREMENTS

A. Delegated Design: Engage a qualified professional engineer, as defined in Section 01 40 00 "Quality Requirements," to design seismic bracing of tracks to structure above.

B. Acoustical Performance: Provide operable panel partitions tested by a qualified testing agency for the following acoustical properties according to test methods indicated:

1. Sound-Transmission Requirements: Operable panel partition assembly tested for laboratory sound-transmission loss performance according to ASTM E90, determined by ASTM E413, and rated for not less than the STC indicated.

2.2 OPERABLE ACOUSTICAL PANELS

A. Operable Acoustical Panels: Partition system, including panels, seals, finish facing, suspension system, operators, and accessories.

1. Manufacturers: Subject to compliance with requirements, provide products by one of the following:
   a. Advanced Equipment Corporation.
   b. KWIK-WALL Company.
   c. Modernfold, Inc.
   d. Panelfold Inc.
2. Basis of Design Product: Signature 800 Model 842 as manufactured by Moderco, Inc.

B. Panel Operation: Series of paired flat panels hinged together in pairs, manually operated, top supported with operable floor seals and automatic top seals.

C. Panel Construction: Nominal 4.25-inch (108 mm) thick panels in manufacturer's standard 51-inch (1295 mm) widths. All panel horizontal and vertical framing members fabricated from minimum 16-gage formed steel with overlapped and welded corners for rigidity. Top channel is reinforced to support suspension system components. Frame is designed so that full vertical edges of panels are of formed steel and provide concealed protection of the edges of the panel skin.

D. Dimensions: Fabricate operable acoustical panel partitions to form an assembled system of dimensions indicated and verified by field measurements.

1. Panel Width: Equal widths.

E. STC: Not less than 54.

F. Panel Weight: 9.5 lb/sq. ft. maximum.

G. Panel Skin: Roll-formed steel wrapping around panel edge.

1. Lock formed and welded directly to the frame for unitized construction. Attachment of panel skin to frame by means other than welding is not acceptable.

H. Panel Closure: Manufacturer's standard unless otherwise indicated.

1. Initial Closure: Resilient, bulb-shaped acoustical seal.

2. Final Closure: Horizontally expanding panel edge with removable crank.

I. Panel Trim: No vertical or horizontal trim required on edges of panels; minimal groove appearance at panel joints.

J. Finish Facing:
1. Full height, porcelain enamel writeable surface.

2.3 SEALS

A. Description: Seals that produce operable panel partitions complying with performance requirements and the following:
1. Manufacturer's standard seals unless otherwise indicated.
2. Seals made from materials and in profiles that minimize sound leakage.
3. Seals fitting tight at contact surfaces and sealing continuously between adjacent panels and between operable panel partition perimeter and adjacent surfaces, when operable panel partition is extended and closed.

B. Vertical Interlocking Sound Seals Between Panels: Aluminum astragals, with tongue and groove configuration in each panel edge. Rigid plastic astragals are not acceptable.

C. Horizontal Top Seals: Automatic operable top seals.

D. Horizontal Bottom Seals: Manually activated seals providing nominal 2" (51mm) operating clearance with an operating range of + 0.50" (13mm) to - 1.50" (38mm). Seal shall be operable from panel edge or face. Extended seal shall exert nominal 120 pounds (265 kg) downward force to the floor throughout operating range.

2.4 PANEL FINISH FACINGS

A. Description: Finish facings for panels that comply with indicated fire-test- response characteristics and that are factory applied to operable panel partitions with appropriate backing, using mildew-resistant nonstaining adhesive as recommended by facing manufacturer's written instructions.
1. Apply one-piece, seamless facings free of air bubbles, wrinkles, blisters, and other defects, with invisible seams complying with Shop Drawings for location, and with no gaps or overlaps. Horizontal seams are not permitted. Tightly secure and conceal raw and selvage edges of facing for finished appearance.

B. Porcelain Enamel Covering: Provide porcelain enamel writeable surface.
1. Color: White, unless otherwise indicated.

C. Trimless Edges: Fabricate exposed panel edges so finish facing wraps uninterrupted around panel, covering edge and resulting in an installed partition with facing visible on vertical panel edges, without trim, for minimal sightlines at panel-to-panel joints.

2.5 SUSPENSION SYSTEMS

A. Tracks: Minimum 11-gauge, 0.12-inch (3.04mm) roll-formed steel track, suitable for either direct mounting to a wood header or supported by adjustable steel hanger brackets, supporting the load-bearing surface of the track, connected to structural support by pairs of 0.38-inch (10mm) diameter threaded rods. Aluminum track is not acceptable.

1. Exposed track soffit: Steel, integral to track, and pre-painted off-white.

B. Carriers: One all-steel trolley with steel-tired ball bearing wheels per panel (except hinged panels). Non-steel tires are not acceptable.

C. Steel Finish: Manufacturer's standard, factory-applied, corrosion-resistant, protective coating unless otherwise indicated.

PART 3 - EXECUTION

3.1 EXAMINATION

A. Examine flooring, floor levelness, structural support, and opening, with Installer present, for compliance with requirements for installation tolerances and other conditions affecting performance of operable panel partitions.

B. Proceed with installation only after unsatisfactory conditions have been corrected.

3.2 INSTALLATION

A. Install operable panel partitions and accessories after other finishing operations, including painting, have been completed in area of partition installation.

B. Install panels in numbered sequence indicated on Shop Drawings.

C. Broken, cracked, chipped, deformed, or unmatched panels are not acceptable.

D. Broken, cracked, deformed, or unmatched gasketing or gasketing with gaps at butted ends is not acceptable.

3.3 ADJUSTING

A. Adjust operable panel partitions, hardware, and other moving parts to function smoothly, and lubricate as recommended by manufacturer.

B. Adjust storage pocket doors to operate smoothly and easily, without binding or warping.

C. Verify that safety devices are properly functioning.

3.4 MAINTENANCE SERVICE

A. Maintenance Service: Beginning at Substantial Completion, maintenance service shall include 12 months' full maintenance by manufacturer's authorized service representative. Include quarterly preventive maintenance, repair or replacement of worn or defective components, lubrication, cleaning, and adjusting as required for proper operable-partition operation. Parts and supplies shall be manufacturer's authorized replacement parts and supplies.

3.5 DEMONSTRATION

A. Engage a factory-authorized service representative to train Owner's maintenance personnel to adjust, operate, and maintain operable panel partitions.

END OF SECTION 102239

SECTION 102800 - TOILET AND BATH ACCESSORIES

PART 1 - GENERAL

1.1 RELATED DOCUMENTS

A. Drawings and general provisions of the Contract, including General and Supplementary Conditions and Division 1 Specification Sections, apply to this Section.

1.2 SUMMARY

A. This Section includes the following:

1. Toilet and bath accessories.
2. Warm-air dryers.

1.3 SUBMITTALS

A. Product Data: Include construction details, material descriptions and thicknesses, dimensions, profiles, fastening and mounting methods, specified options, and finishes for each type of accessory specified.

B. Setting Drawings: For cutouts required in other work; include templates, substrate preparation instructions, and directions for preparing cutouts and installing anchoring devices.

C. Maintenance Data: For accessories to include in maintenance manuals specified in Division 1. Provide lists of replacement parts and service recommendations.

1.4 QUALITY ASSURANCE

A. Source Limitations: Provide products of same manufacturer for each type of accessory unit and for units exposed to view in same areas, unless otherwise approved by Architect.

B. Product Options: Accessory requirements, including those for materials, finishes, dimensions, capacities, and performance, are established by specific products indicated in the Toilet and Bath Accessory Schedule.

1. Do not modify aesthetic effects, as judged solely by Architect, except with Architect's approval. Where modifications are proposed, submit comprehensive explanatory data to Architect for review.

1.5 COORDINATION

A. Coordinate accessory locations with other work to prevent interference with clearances required for access by disabled persons, proper installation, adjustment, operation, cleaning, and servicing of accessories.

B. Deliver inserts and anchoring devices set into concrete or masonry as required to prevent delaying the Work.

1.6 WARRANTY

A. General Warranty: Special warranty specified in this Article shall not deprive Owner of other rights Owner may have under other provisions of the Contract Documents and shall be in addition to, and run concurrent with, other warranties made by Contractor under requirements of the Contract Documents.

B. Manufacturer's Mirror Warranty: Written warranty, executed by mirror manufacturer agreeing to replace mirrors that develop visible silver spoilage defects within minimum warranty period indicated.

1. Minimum Warranty Period: 15 years from date of Substantial Completion.

C. Manufacturer's Warranty: Written warranty, executed by manufacturer agreeing to replace accessories that fail within minimum warranty period indicated.

1. Minimum Warranty Period: 10 years from date of Substantial Completion.

PART 2 - PRODUCTS

2.1 MANUFACTURERS

A. Manufacturers: Subject to compliance with requirements, provide accessories by one of the following:

1. Toilet and Bath Accessories:

a. Bobrick Washroom Equipment, Inc.

b. Bradley Corporation.

2. Warm-Air Dryers:

a. As specified herein.

B. Products: Subject to compliance with requirements, provide one of the products indicated for each designation in the Toilet and Bath Accessory Schedule at the end of Part 3.

2.2 MATERIALS

A. Stainless Steel: ASTM A 666, Type 304, with No. 4 finish (satin), in 0.0312-inch (0.8-mm) minimum nominal thickness, unless otherwise indicated.

B. Brass: ASTM B 19, leaded and unleaded flat products; ASTM B 16 (ASTM B 16M), rods, shapes, forgings, and flat products with finished edges; ASTM B 30, castings.

C. Sheet Steel: ASTM A 366/A 366M, cold rolled, commercial quality, 0.0359-inch (0.9-mm) minimum nominal thickness; surface preparation and metal pretreatment as required for applied finish.

D. Galvanized Steel Sheet: ASTM A 653/A 653M, G60 (Z180).

E. Chromium Plating: ASTM B 456, Service Condition Number SC 2 (moderate service), nickel plus chromium electrodeposited on base metal.

F. Mirror Glass: ASTM C 1036, Type I, Class 1, Quality q2, nominal 6.0 mm thick, with silvering, electroplated copper coating, and protective organic coating complying with FS DD-M-411.

G. Galvanized Steel Mounting Devices: ASTM A 153/A 153M, hot-dip galvanized after fabrication.

H. Fasteners: Screws, bolts, and other devices of same material as accessory unit, tamper and theft resistant when exposed, and of galvanized steel when concealed.

2.3 FABRICATION

A. General: One, maximum 1-1/2-inch- (38-mm-) diameter, unobtrusive stamped manufacturer logo, as approved by Architect, is permitted on exposed face of accessories. On interior surface not exposed to view or back surface of each accessory, provide printed, waterproof label or stamped nameplate indicating manufacturer's name and product model number.

B. Surface-Mounted Toilet Accessories: Unless otherwise indicated, fabricate units with tight seams and joints, and exposed edges rolled. Hang doors and access panels with continuous stainless-steel hinge. Provide concealed anchorage where possible.

C. Recessed Toilet Accessories: Unless otherwise indicated, fabricate units of all-welded construction, without mitered corners. Hang doors and access panels with full-length, stainless-steel hinge. Provide anchorage that is fully concealed when unit is closed.

D. Framed Glass-Mirror Units: Fabricate frames for glass-mirror units to accommodate glass edge protection material. Provide mirror backing and support system that permits rigid, tamper-resistant glass installation and prevents moisture accumulation.

1. Provide galvanized steel backing sheet, not less than 0.034 inch (0.85 mm) and full mirror size, with nonabsorptive filler material. Corrugated cardboard is not an acceptable filler material.

E. Mirror-Unit Hangers: Provide mirror-unit mounting system that permits rigid, tamper- and theft-resistant installation, as follows:

1. One-piece, galvanized steel, wall-hanger device with spring-action locking mechanism to hold mirror unit in position with no exposed screws or bolts.

PART 3 - EXECUTION

3.1 INSTALLATION

A. Install accessories according to manufacturers' written instructions, using fasteners appropriate to substrate indicated and recommended by unit manufacturer. Install units level, plumb, and firmly anchored in locations and at heights indicated.

B. Secure mirrors to walls in concealed, tamper-resistant manner with special hangers, toggle bolts, or screws. Set units level, plumb, and square at locations indicated, according to manufacturer's written instructions for substrate indicated.

C. Install grab bars to withstand a downward load of at least 250 lbf (1112 N), when tested according to method in ASTM F 446.

3.2 ADJUSTING AND CLEANING

A. Adjust accessories for unencumbered, smooth operation and verify that mechanisms function properly. Replace damaged or defective items.

B. Remove temporary labels and protective coatings.

C. Clean and polish exposed surfaces according to manufacturer's written recommendations.

3.3 TOILET AND BATH ACCESSORY SCHEDULE – Note: All finishes shall be #4 stainless steel unless otherwise noted.

A. Grab Bar: Provide stainless-steel grab bar complying with the following:

1. Products: Subject to the requirements, provide one of the following:

a. 6806 Series; Bobrick
b. Model #812; Bradley

2. Stainless-Steel Nominal Thickness: Minimum 0.05 inch (1.3 mm).
3. Mounting: Concealed with manufacturer's standard flanges and anchors.
4. Gripping Surfaces: Manufacturer's standard slip-resistant texture.
5. Outside Diameter: 1-1/2 inches (38 mm) for heavy-duty applications.

B. Mirror Unit: Provide mirror unit complying with the following:

1. Products: Subject to the requirements, provide one of the following mirror units in all multi-occupant restrooms (size shown on drawings):

    a. B-290 series; Bobrick
    b. Model #780; Bradley

C. Horizontal Baby Changing Station: Provide mirror unit complying with the following:

1. Products: Subject to the requirements, provide one of the following in all multi-occupant restrooms:

    a. KB310-SSWM; Bobrick
    b. Model #963 series; Bradley

D. Warm-Air Dryer: Provide ADA-compliant warm-air dryer complying with the following:

1. Products: Subject to the requirements, provide one of the following:

    a. Excel ThinAir Hand Dryer model number TA-ABS (white).

    b. Bradley Aerix+ Hand Dryer model number 2923-28W000 (white)

    c. World Dryer SLIMDri Hand Dryer model number #L-974

    d. Or equal product by the following manufacturers:
        1) Columbia
        2) Bobrick

2. Hand Dryer: Surface-mounted, ADA-complaint, warm-air hand dryer with manufacturers' standard, white porcelain enamel steel cover, infrared sensor and timed power cut-off switch.
3. Provide surface mounted, srtainless steel antimicrobial wall guard
        a) Width: 15-3/4"
        b) Depth: 1/16"
        c) Height: 31-3/4"

E. Install Pipe insulation on all exposed piping beneath lavatories: Truebro Mfg. Co. #101-G at each handicap lavatory.

F. NOTE: CONTRACTOR IS RESPONSIBLE FOR INSTALLING THE OWNER FURNISHED TOILET ACCESSORIES (TOILET TISSUE DISPENSERS AND SANITARY NAPKIN DISPENSERS) AS NOTED ON THE DRAWINGS.

END OF SECTION 102800

SECTION 104413 - FIRE PROTECTION CABINETS

PART 1 - GENERAL

1.1 RELATED DOCUMENTS

A. Drawings and general provisions of the Contract, including General and Supplementary Conditions and Division 01 Specification Sections, apply to this Section.

1.2 SUMMARY

A. Section Includes:

1. Fire-protection cabinets for the following:

a. Portable fire extinguishers.

B. Related Requirements:

1. Section 104416 "Fire Extinguishers."

1.3 ACTION SUBMITTALS

A. Product Data: For each type of product. Show door hardware, cabinet type, trim style, and panel style. Include roughing-in dimensions and details showing recessed-, semi recessed-, or surface-mounting method and relationships of box and trim to surrounding construction.

B. Shop Drawings: For fire-protection cabinets. Include plans, elevations, sections, details, and attachments to other work.

C. Samples: For each type of exposed finish required.

D. Samples for Verification: For each type of exposed finish required, prepared on Samples 6 by 6 inches (150 by 150 mm) square.

1.4 CLOSEOUT SUBMITTALS

A. Maintenance Data: For fire-protection cabinets to include in maintenance manuals.

1.5 COORDINATION

A. Coordinate size of fire-protection cabinets to ensure that type and capacity of fire extinguishers indicated are accommodated.

B. Coordinate sizes and locations of fire-protection cabinets with wall depths.

PART 2 - PRODUCTS

2.1 PERFORMANCE REQUIREMENTS

A. Fire-Rated Fire-Protection Cabinets: Listed and labeled to comply with requirements in ASTM E 814 for fire-resistance rating of walls where they are installed.

2.2 FIRE-PROTECTION CABINET

A. Cabinet Type: Suitable for fire extinguisher.
   1. Manufacturers: Subject to compliance with requirements, provide products from one of the following manufacturers:
      a. J.L. Industries, Inc.
      b. Larsen's Manufacturing Company.
      c. Potter-Roemer; Div. of Smith Industries, Inc.

B. Cabinet Construction: Nonrated typical and 1-hour fire rated where cabinets are specifically indicated in rated walls.
   1. Fire-Rated Cabinets: Construct fire-rated cabinets with double walls fabricated from 0.043-inch- (1.09-mm-) thick cold-rolled steel sheet lined with minimum 5/8-inch- (16-mm-) thick fire-barrier material. Provide factory-drilled mounting holes.

C. Cabinet Material: Cold-rolled steel sheet.

D. Semi recessed Cabinet: One-piece combination trim and perimeter door frame overlapping surrounding wall surface with exposed trim face and wall return at outer edge (backbend).
   1. Rolled-Edge Trim: 2-1/2-inch (64-mm) backbend depth.

E. Cabinet Trim Material: Steel sheet.

F. Door Material: Steel sheet.

G. Door Style: Vertical duo panel with frame.

H. Door Glazing: Acrylic sheet.
   1. Acrylic Sheet Color: Clear transparent acrylic sheet.

I. Door Hardware: Manufacturer's standard door-operating hardware of proper type for cabinet type, trim style, and door material and style indicated.
   1. Provide manufacturer's standard.
   2. Provide manufacturer's standard hinge permitting door to open 180 degrees.

J. Accessories:

1. Mounting Bracket: Manufacturer's standard steel, designed to secure fire extinguisher to fire-protection cabinet, of sizes required for types and capacities of fire extinguishers indicated, with plated or baked-enamel finish.
2. Lettered Door Handle: One-piece, cast-iron door handle with the word "FIRE" embossed into face.

K. Materials:

1. Cold-Rolled Steel: ASTM A 1008/A 1008M, Commercial Steel (CS), Type B.

    a. Finish: Baked enamel or powder coat.
    b. Color: As selected by Architect from full range of industry colors and color densities.
2. Transparent Acrylic Sheet: ASTM D 4802, Category A-1 (cell-cast sheet), 6 mm thick, with Finish 1 (smooth or polished).

2.3 FABRICATION

A. Fire-Protection Cabinets: Provide manufacturer's standard box (tub) with trim, frame, door, and hardware to suit cabinet type, trim style, and door style indicated.

1. Weld joints and grind smooth.
2. Provide factory-drilled mounting holes.
3. Prepare doors and frames to receive locks.

B. Cabinet Doors: Fabricate doors according to manufacturer's standards, from materials indicated and coordinated with cabinet types and trim styles.

1. Fabricate door frames with tubular stiles and rails and hollow-metal design, minimum 1/2 inch (13 mm) thick.
2. Miter and weld perimeter door frames.

C. Cabinet Trim: Fabricate cabinet trim in one piece with corners mitered, welded, and ground smooth.

2.4 GENERAL FINISH REQUIREMENTS

A. Comply with NAAMM's AMP 500, "Metal Finishes Manual for Architectural and Metal Products," for recommendations for applying and designating finishes.

B. Protect mechanical finishes on exposed surfaces of fire-protection cabinets from damage by applying a strippable, temporary protective covering before shipping.

C. Finish fire-protection cabinets after assembly.

D. Appearance of Finished Work: Noticeable variations in same piece are not acceptable. Variations in appearance of adjoining components are acceptable if

they are within the range of approved Samples and are assembled or installed to minimize contrast.

PART 3 - EXECUTION

3.1 EXAMINATION

A. Examine walls and partitions for suitable framing depth and blocking where recessed and semi recessed cabinets will be installed.

B. Proceed with installation only after unsatisfactory conditions have been corrected.

3.2 PREPARATION

A. Prepare recesses for recessed and semi recessed fire-protection cabinets as required by type and size of cabinet and trim style.

3.3 INSTALLATION

A. General: Install fire-protection cabinets in locations and at mounting heights indicated.

1. Fire-Protection Cabinets: 54 inches (1372 mm) above finished floor to top of cabinet with top of extinguisher not higher than 48" above finished floor.

B. Fire-Protection Cabinets: Fasten cabinets to structure, square and plumb.

1. Unless otherwise indicated, provide recessed fire-protection cabinets. If wall thickness is inadequate for recessed cabinets, provide semi recessed fire-protection cabinets.
2. Provide inside latch and lock for break-glass panels.
3. Fasten mounting brackets to inside surface of fire-protection cabinets, square and plumb.

3.4 ADJUSTING AND CLEANING

A. Remove temporary protective coverings and strippable films, if any, as fire-protection cabinets are installed unless otherwise indicated in manufacturer's written installation instructions.

B. Adjust fire-protection cabinet doors to operate easily without binding. Verify that integral locking devices operate properly.

C. On completion of fire-protection cabinet installation, clean interior and exterior surfaces as recommended by manufacturer.

D. Touch up marred finishes, or replace fire-protection cabinets that cannot be restored to factory-finished appearance. Use only materials and procedures recommended or furnished by fire-protection cabinet and mounting bracket manufacturers.

E. Replace fire-protection cabinets that have been damaged or have deteriorated beyond successful repair by finish touchup or similar minor repair procedures.

END OF SECTION 104413

SECTION 104416 - FIRE EXTINGUISHERS

PART 1 - GENERAL

1.1 RELATED DOCUMENTS

A. Drawings and general provisions of the Contract, including General and Supplementary Conditions and Division 01 Specification Sections, apply to this Section.

1.2 SUMMARY

A. Section includes portable fire extinguishers and mounting brackets for fire extinguishers.

B. Refer to specification section 104413 for cabinet information.

1.3 ACTION SUBMITTALS

A. Product Data: For each type of product. Include rating and classification, material descriptions, dimensions of individual components and profiles, and finishes for fire extinguisher and mounting brackets.

1.4 INFORMATIONAL SUBMITTALS

A. Warranty: Sample of special warranty.

1.5 CLOSEOUT SUBMITTALS

A. Operation and Maintenance Data: For fire extinguishers to include in maintenance manuals.

1.6 COORDINATION

A. Coordinate type and capacity of fire extinguishers with fire-protection cabinets to ensure fit and function.

1.7 WARRANTY

A. Special Warranty: Manufacturer's standard form in which manufacturer agrees to repair or replace fire extinguishers that fail in materials or workmanship within specified warranty period.

1. Failures include, but are not limited to, the following:

a. Failure of hydrostatic test according to NFPA 10.
b. Faulty operation of valves or release levers.

2. Warranty Period: five years from date of Substantial Completion.

PART 2 - PRODUCTS

2.1 PERFORMANCE REQUIREMENTS

A. NFPA Compliance: Fabricate and label fire extinguishers to comply with NFPA 10, "Portable Fire Extinguishers."

B. Fire Extinguishers: Listed and labeled for type, rating, and classification by an independent testing agency acceptable to authorities having jurisdiction.

1. Provide fire extinguishers approved, listed, and labeled by FM Global.

2.2 PORTABLE, HAND-CARRIED FIRE EXTINGUISHERS

A. Fire Extinguishers: Type, size, and capacity for each fire-protection cabinet and mounting bracket indicated.
1. Manufacturers: Subject to compliance with requirements, provide products from one of the following manufacturers:
a. J.L. Industries, Inc.
b. Larsen's Manufacturing Company.
c. Potter-Roemer; Div. of Smith Industries, Inc.
2. Valves: Manufacturer's standard.
3. Handles and Levers: Stainless steel.
4. Instruction Labels: Include pictorial marking system complying with NFPA 10, Appendix B.

B. Multipurpose Dry-Chemical Type in Steel Container: UL-rated 2-A:10-B:C, 5-lb (2.3-kg) nominal capacity, with monoammonium phosphate-based dry chemical in enameled-steel container.

2.3 MOUNTING BRACKETS

A. Mounting Brackets: Manufacturer's standard galvanized steel, designed to secure fire extinguisher to wall or structure, of sizes required for types and capacities of fire extinguishers indicated, with plated or red baked-enamel finish.

PART 3 - EXECUTION

3.1 EXAMINATION

A. Examine fire extinguishers for proper charging and tagging.

1. Remove and replace damaged, defective, or undercharged fire extinguishers.

B. Proceed with installation only after unsatisfactory conditions have been corrected.

3.2 INSTALLATION

A. General: Install fire extinguishers and mounting brackets in locations indicated and in compliance with requirements of authorities having jurisdiction.

1. Mounting Brackets: 48 inches above finished floor to top of fire extinguisher.

B. Mounting Brackets: Fasten mounting brackets to surfaces, square and plumb, at locations indicated.

END OF SECTION 104416

SECTION 113013 - APPLIANCES

PART 1 - GENERAL

1.1 RELATED DOCUMENTS

A. Drawings and general provisions of the Contract, including General and Supplementary Conditions and Division 1 Specification Sections, apply to this Section.

1.2 SUMMARY

A. Section Includes:

1. Break Room Appliances.

1.3 SUBMITTALS

A. Product Data: For each type of product indicated. Include rated capacities, operating characteristics, dimensions, furnished accessories, and finishes for each appliance.

B. Product Schedule: For appliances. Use same designations indicated on Drawings.

C. Operation and Maintenance Data: For each residential appliance to include in operation and maintenance manuals.

D. Warranties: Sample of special warranties.

1.4 QUALITY ASSURANCE

A. Installer Qualifications: An employer of workers trained and approved by manufacturer for installation and maintenance of units required for this Project.

B. Source Limitations: Obtain residential appliances from single source and each type of residential appliance from single manufacturer.

1.5 WARRANTY

A. Special Warranties: Manufacturer's standard form in which manufacturer agrees to repair or replace residential appliances or components that fail in materials or workmanship within specified warranty period.

1. Warranty Period: Two years from date of Substantial Completion.

B. Refrigerator/Freezer and Icemaker, Sealed System: Full warranty including parts and labor for on-site service on the product.

1. Warranty Period for Two years from date of Substantial Completion.

PART 2 - PRODUCTS

2.1 GENERAL

A. General: All appliances in accessible units shall be ADA compliant, unless noted otherwise

B. General: All appliances shall be Energy Star Certified, unless noted otherwise

2.2 DISHWASHER

A. Manufacturers: Subject to compliance with requirements, provide the following products:

1. *GE dishwasher – Stainless Steel #**GDT225SSLSS***
2. *Frigidaire - Stainless Steel #**FFBD2420US***
3. *Approved Equal Product*

2.3 REFRIGERATOR/FREEZERS

A. Manufacturers: Subject to compliance with requirements, provide the following products:

1. *General Electric Model #: **GIE18GSNRSS** with icemaker - Stainless Steel*
2. *Frigidaire Model #: **FFHI1835VS** with icemaker - Stainless Steel*
3. *Approved Equal Product*

2.4 GENERAL FINISH REQUIREMENTS

A. Protect mechanical finishes on exposed surfaces from damage by applying a strippable, temporary protective covering before shipping.

B. Appearance of Finished Work: Noticeable variations in same piece are not acceptable. Variations in appearance of adjoining components are acceptable if they are within the range of approved Samples and are assembled or installed to minimize contrast.

PART 3 - EXECUTION

3.1 EXAMINATION

A. Examine substrates and conditions, with Installer present, for compliance with requirements for installation tolerances, power connections, and other conditions affecting installation and performance of residential appliances.

B. Examine roughing-in for piping systems to verify actual locations of piping connections before appliance installation.

C. Prepare written report, endorsed by Installer, listing conditions detrimental to performance of the Work.

D. Proceed with installation only after unsatisfactory conditions have been corrected.

3.2 INSTALLATION, GENERAL

A. General: Comply with manufacturer's written instructions. *Provide all required accessories and components required to complete the installation of the appliances specified in this specification section*.

B. Freestanding Equipment: Place units in final locations after finishes have been completed in each area. Verify that clearances are adequate to properly operate equipment.

C. Utilities: See Divisions 22 and 26 for plumbing and electrical requirements.

3.3 FIELD QUALITY CONTROL

A. Tests and Inspections:

1. Perform visual, mechanical, and electrical inspection and testing for each appliance according to manufacturers' written recommendations. Certify compliance with each manufacturer's appliance-performance parameters.
2. Leak Test: After installation, test for leaks. Repair leaks and retest until no leaks exist.
3. Operational Test: After installation, start units to confirm proper operation.

B. An appliance will be considered defective if it does not pass tests and inspections.

C. Prepare test and inspection reports.

END OF SECTION 113013

SECTION 115213 – PROJECTION SCREENS

PART 1 - GENERAL

1.1 RFERENCED DOCUMENTS

A. The general provisions of the contract, including General Provisions, Supplemental Conditions, and Division 01 – General Requirements apply to the work specified in this Section.

1.2 DESCRIPTION

A. Section includes projection screens, including control stations for motorized screens, anchors, and all accessories required.

1.3 RELATED SECTIONS

A. Refer to Division 26 Electrical Drawings for coordination of conduits, pull wires, and connections to electrical power. All conduits, standard junction boxes, floor boxes and audiovisual system related power are by Division 26.

1.4 SUBMITTALS

A. Refer to Division 01.

B. Product Data: Submit six (6) electronic copies of manufacturer's specifications and installation instructions for all projection screens and ceiling mounts. Provide in PDF format or per Division 01 as instructed.

1.5 PRODUCT DELIVERY, STORAGE AND HANDLING

A. Projection screens and ceiling mounts shall not be delivered to job site until building is enclosed, climate controlled and ready for installation. Protect screens, lifts and mounts from damage during delivery, storage, handling, and installation.

1.6 JOB CONDITIONS

A. Coordinate installation of projection screens, lifts and ceiling mounts with work of other trades.

PART 2 - PRODUCTS

2.1 MOTORIZED PROJECTION SCREENS

A. Furnish and install all projection screens in the areas as indicated. Verify locations with architect prior to installation. Refer to architectural drawings for locations.
B. Install the projection screen only when a clean and controlled environment is present.

C. Screens projection surface shall be seamless and shall be hung plumb and square. Motor to operate on 120 VAC. Motor to be mounted inside the roller, to be 3-wire, instantly reversible with lifetime lubrication. Motor to be mounted with rubber vibration isolators.

D. All painting, metalwork, and woodwork shall be completed prior to installation, to protect against damage by other contractors.

E. The screen shall be delivered to the job site, still in factory crating, while access is still available for a screen of these dimensions. Store the screen in such a way as to protect it from moisture and adverse weather conditions. Take all precautions necessary to protect the screen from damage during storage and installation. Projection screens must remain in a climate-controlled environment at all times.

F. Furnish and install the following:

1. TYPE PS-1 (Multipurpose Rooms 109, 110, 111) – Size: 78" H x 139" W
   A. Basis of Design: DA-LITE Advantage Series electric projection screen with standard 2" black borders and matte white viewing surface (extra drop to be black). All screens to be provided with 11" of total black drop. All screens are to be provided with built-in low voltage control module and wall switches. Refer to the drawings for sizes; verify locations and mounting details with the Architect.
   B. Access E by Draper

2. TYPE PS-2 (Tech Classrooms 124, 125, 126) – Size: 65" H x 116" W
   A. Basis of Design: DA-LITE Advantage Series electric projection screen with standard 2" black borders and matte white viewing surface (extra drop to be black). All screens to be provided with 8" of total black drop. All screens are to be provided with built-in low voltage control module and wall switches. Refer to the drawings for sizes; verify locations and mounting details with the Architect.
   B. Access E by Draper

3. TYPE PS-3 (Auditorium 119) – Size: 78" H x 139" W
   A. Basis of Design: DA-LITE Advantage Series electric projection screen with standard 2" black borders and matte white viewing surface (extra drop to be black). All screens to be provided with 40" of total black drop. All screens are to be provided with built-in low voltage control module and wall switches. Refer to the drawings for sizes; verify locations and mounting details with the Architect.
   B. Access E by Draper

4. TYPE PS-4 (Classrooms 214, 215, 216, 319, 320 and 321) – Size: 78" H x 139" W
   A. Basis of Design: DA-LITE Advantage Series electric projection screen with standard 2" black borders and matte white viewing surface (extra drop to be black). All screens to be provided with 4" of total black drop. All screens are to be provided with built-in low voltage control module and wall switches. Refer to the drawings for sizes; verify locations and mounting details with the Architect.
   B. Access E by Draper

5. Contractor to provide all accessories as necessary to mount the projector screen to the wall behind, recessed above the ceiling.

PART 3 - EXECUTION

3.1 INSPECTION

A. Installer must examine substrates and conditions under which projection screens, video display back boxes, video projector ceiling mounts, docking station back boxes and mounts, and miscellaneous infrastructure items are to be installed and notify Contractor in writing of conditions detrimental to proper and timely completion of work.

3.2 INSTALLATION

A. Install the projection screens, back boxes and accessories at the locations shown in accordance with manufacturer's instructions. Install screens level, plumb, secure, and at proper height. Cooperate with other trades for securing projection screen units to finished wall and ceiling surfaces. Repair or replace damaged items as directed by the Architect. Refer to the architectural drawings for mounting details.

B. Provide protection for installed screen units so that screen units will be in perfect operating condition, without damage at completion of project.

3.3 ADJUSTMENT AND CLEANING

A. Clean exposed surfaces of screen, ceiling mounts and back boxes.

B. Clean up all debris caused by work of this Section, keeping the premises neat and clean at all times.

END OF SECTION 115213

SECTION 122313 - ROLLER SHADES

PART 1 - GENERAL

1.1 RELATED DOCUMENTS

A. Drawings and general provisions of the Contract, including General and Supplementary Conditions and Division 1 Specification Sections, apply to this Section.

1.2 SUMMARY

A. This Section includes roller shades, aluminum housings for motorized shade operators and motorized shade operators.

B. Provide and install manual and motorized roller shades at the following locations noted on the drawings.

1.3 SUBMITTALS

A. Product Data: For each type of product indicated. Include styles, material descriptions, construction details, dimensions of individual components and profiles, features, finishes, and operating instructions.

1. Motorized Shade Operators: Include operating instructions.
2. Motors: Show nameplate data, ratings, characteristics, and mounting arrangements.

B. Shop Drawings: Show location and extent of roller shades. Include elevations, sections, details, and dimensions not shown in Product Data. Show installation details, mountings, attachments to other work, operational clearances, and relationship to adjoining work.

1. Motorized Shade Operators: Show locations and details for installing operator components, switches, and controls. Indicate motor size, electrical characteristics, drive arrangement, mounting, and grounding provisions.
2. Wiring Diagrams: Power, system, and control wiring.

C. Coordination Drawings: Reflected ceiling plans, drawn to scale, on which the following items are shown and coordinated with each other, based on input from installers of the items involved:

1. Ceiling suspension system members and attachment to building structure.
2. Ceiling-mounted or penetrating items including light fixtures, air outlets and inlets, speakers, sprinklers, recessed shades, and special moldings at walls, column penetrations, and other junctures of acoustical ceilings with adjoining construction.

3. Shade mounting assembly and attachment.
4. Size and location of access to shade operator, motor, and adjustable components.
5. Minimum Drawing Scale: 1:50.

D. Samples for Initial Selection: For each colored component of each type of shade indicated.

1. Include similar Samples of accessories involving color selection.

E. Samples for Verification:

1. Complete, full-size operating unit not less than 16 inches (400 mm) wide for each type of roller shade indicated.
2. For the following products:
   a. Shade Material: Not less than 1000 mm square section of fabric, from dye lot used for the Work, with specified treatments applied. Show complete pattern repeat. Mark top and face of material.

F. Window Treatment Schedule: For roller shades. Use same designations indicated on Drawings.

G. Product Certificates: For each type of roller shade, signed by product manufacturer.

H. Qualification Data: For Installer.

I. Maintenance Data: For roller shades to include in maintenance manuals. Include the following:

1. Methods for maintaining roller shades and finishes.
2. Precautions about cleaning materials and methods that could be detrimental to fabrics, finishes, and performance.
3. Operating hardware.
4. Motorized shade operator.

1.4 QUALITY ASSURANCE

A. Installer Qualifications: Fabricator of products.

B. Source Limitations: Obtain roller shades through one source from a single manufacturer.

C. Fire-Test-Response Characteristics: Provide roller shade band materials with the fire-test-response characteristics indicated, as determined by testing identical products per test method indicated below by UL or another testing and inspecting agency acceptable to authorities having jurisdiction:

1. Flame-Resistance Ratings: Passes NFPA 701.

D. Electrical Components, Devices, and Accessories: Listed and labeled as defined in NFPA 70, Article 100, by a testing agency acceptable to authorities having jurisdiction, and marked for intended use.

1.5 DELIVERY, STORAGE, AND HANDLING

A. Deliver shades in factory packages, marked with manufacturer and product name, and location of installation using same designations indicated on Drawings and in a window treatment schedule.

1.6 PROJECT CONDITIONS

A. Environmental Limitations: Do not install roller shades until construction and wet and dirty finish work in spaces, including painting, is complete and ambient temperature and humidity conditions are maintained at the levels indicated for Project when occupied for its intended use.

B. Field Measurements: Where roller shades are indicated to fit to other construction, verify dimensions of other construction by field measurements before fabrication and indicate measurements on Shop Drawings. Allow clearances for operable glazed units' operation hardware throughout the entire operating range. Notify Architect of discrepancies. Coordinate fabrication schedule with construction progress to avoid delaying the Work.

PART 2 - PRODUCTS

2.1 ROLLER SHADES

A. Available Products: Subject to compliance with requirements, products that may be incorporated into the Work include, but are not limited to, the following:

B. Products: Subject to compliance with requirements, provide one of the following:
1. Basis of Design - MechoShade Systems, Inc..
2. equal system by Silent Gliss USA, Inc. and SFW Contract.

C. Shade Band Material: 5300 Series EuroVeil

1. Fabric Width: Center of vertical mullion to center of vertical mullion.
2. Colors: As selected by Architect from manufacturer's full range.
3. Bottom Hem: Straight

D. Rollers: Electrogalvanized or epoxy primed steel or extruded-aluminum tube of diameter and wall thickness required to support and fit internal components of operating system and the weight and width of shade band material without sagging; designed to be easily removable from support brackets.

E. Pocket with Ceiling Slot Opening: Six-sided box units for recessed installation; fabricated from formed-steel sheet, extruded aluminum, or wood; with a bottom consisting of slot opening of minimum dimension to allow lowering and raising of shade and a removable or an openable, continuous metal access panel concealing rollers, brackets, and operating hardware and operators within.

1. Corner Section: Factory formed and welded.

F. Shade Operation: Manual; with spring roller lift operator.

G. Shade Operation: Motorized operator.

2.2 ROLLER SHADE FABRICATION

A. Product Description: Roller shade consisting of a roller, a means of supporting the roller, a flexible sheet or band of material carried by the roller, a means of attaching the material to the roller, a bottom bar, and an operating mechanism that lifts and lowers the shade.

B. Concealed Components: Noncorrodible or corrosion-resistant-coated materials.

1. Lifting Mechanism: With permanently lubricated moving parts.

C. Unit Sizes: Obtain units fabricated in sizes to fill window and other openings as follows, measured at 74 deg F (23 deg C):

1. Shade Units Installed between (Inside) Jambs: Edge of shade not more than 1/4 inch (6 mm) from face of jamb. Length equal to head to sill dimension of opening in which each shade is installed.
2. Shade Units Installed Outside Jambs: Width and length as indicated, with terminations between shades of end-to-end installations at centerlines of mullion or other defined vertical separations between openings.

D. Installation Fasteners: No fewer than two fasteners per bracket, fabricated from metal noncorrosive to shade hardware and adjoining construction; type designed for securing to supporting substrate; and supporting shades and accessories under conditions of normal use.

E. Color-Coated Finish: For metal components exposed to view, apply manufacturer's standard baked finish complying with manufacturer's written instructions for surface preparation including pretreatment, application, baking, and minimum dry film thickness.

F. Colors of Metal and Plastic Components Exposed to View: As selected by Architect from manufacturer's full range unless otherwise indicated.

PART 3 - EXECUTION

3.1 EXAMINATION

A. Examine substrates, areas, and conditions, with Installer present, for compliance with requirements for installation tolerances, operational clearances, accurate locations of connections to building electrical system, and other conditions affecting performance.

1. Proceed with installation only after unsatisfactory conditions have been corrected.

3.2 ROLLER SHADE INSTALLATION

A. Install roller shades level, plumb, and aligned with adjacent units according to manufacturer's written instructions, and located so shade band is not closer than 2 inches (50 mm) to interior face of glass. Allow clearances for window operation hardware.

B. Connections: Connect motorized operators to building electrical system.

3.3 ADJUSTING

A. Adjust and balance roller shades to operate smoothly, easily, safely, and free from binding or malfunction throughout entire operational range.

3.4 CLEANING AND PROTECTION

A. Clean roller shade surfaces after installation, according to manufacturer's written instructions.

B. Provide final protection and maintain conditions, in a manner acceptable to manufacturer and Installer that ensure that roller shades are without damage or deterioration at time of Substantial Completion.

C. Replace damaged roller shades that cannot be repaired, in a manner approved by Architect, before time of Substantial Completion.

3.5 DEMONSTRATION

A. Engage a factory-authorized service representative to train Owner's maintenance personnel to adjust, operate, and maintain roller shades. Refer to Division 1 Section Demonstration and Training."

END OF SECTION 122313

SECTION 123216 - PLASTIC-LAMINATE CASEWORK

PART 1 - GENERAL

1.1 RELATED DOCUMENTS

A. Drawings and general provisions of the Contract, including General and Supplementary Conditions and Division 1 Specification Sections, apply to this Section.

1.2 SUMMARY

A. This Section includes the following:

1. Plastic-laminate casework.

1.3 DEFINITIONS

A. Exposed Portions of Casework: Surfaces visible when doors and drawers are closed, including bottoms of cabinets more than 1200 mm above floor, and visible surfaces in open cabinets or behind glass doors.

1. Ends of cabinets, including those installed directly against walls or other cabinets, shall be considered exposed.

B. Semiexposed Portions of Casework: Surfaces behind opaque doors, such as interiors of cabinets, shelves, dividers, interiors and sides of drawers, and interior faces of doors. Tops of cases 78 inches (1980 mm) or more above floor are defined as semiexposed.

C. Concealed portions of casework include sleepers, web frames, dust panels, and other surfaces not usually visible after installation.

1.4 SUBMITTALS

A. Product Data: For each type of product indicated.

B. Shop Drawings: For plastic-laminate casework. Include plans, elevations, sections, details, and attachments to other work.

1. Indicate locations of blocking and reinforcements required for installing casework.
2. Indicate locations of and clearances from adjacent walls, doors, windows, and other building components.

C. Samples for Initial Selection: Plastic laminate for cabinets and countertops, and other accessories required for casework.

D. Samples for Verification: Unless otherwise directed, approved Sample units may become part of the Work. Notify Architect of their exact locations. If not incorporated into the Work, retain acceptable Sample units at Project site and remove when directed by Architect.

1. One full-size, finished base cabinet complete with hardware, doors, and drawers, but without countertop.
2. One full-size, finished wall cabinet complete with hardware, doors, and adjustable shelves.

1.5 QUALITY ASSURANCE

A. Source Limitations: Obtain casework, including countertops and accessories, through one source from a single manufacturer.

B. Product Designations: Drawings indicate sizes and configurations of casework by referencing designated manufacturer's catalog numbers. Other manufacturers' casework of similar sizes, similar door and drawer configurations, and complying with the Specifications may be considered. Refer to Division 1 Section "Product Requirements."

1.6 DELIVERY, STORAGE, AND HANDLING

A. Protect finished surfaces during handling and installation with protective covering of polyethylene film or other suitable material.

B. Deliver completed laminate clad casework, countertops, and related products only after wet operations in building are completed, store in ventilated place, protected from the weather, with relative humidity range of 20 percent to 50 percent.

1.7 PROJECT CONDITIONS

A. Environmental Limitations: Do not deliver or install plastic-laminate casework until building is enclosed, wet work and utility roughing-in are complete, and HVAC system is operating and maintaining temperature and relative humidity at occupancy levels during the remainder of the construction period.

1.8 WARRANTY

A. Lifetime Guarantee and Limited Warranty to the owner against defective material and fabrication for as long as they own the product. This is a warranty of replacement and repair only, manufacturer shall correct defects in material and/or fabrication without charge.

PART 2 - PRODUCTS

2.1 MANUFACTURERS

A. Manufacturers: Subject to compliance with requirements, provide products by one of the following:

1. Plastic-Laminate-Faced Casework:
    a. Case Systems Inc.
    b. TMI Design Systems Corp.

2.2 CABINET MATERIALS

A. General:

1. Plastic Laminate: High-pressure decorative laminate complying with NEMA LD 3.

B. Exposed and Semiexposed Materials:

1. Plastic Laminate: Type VGS.

a. Colors: As selected by Architect from manufacturer's full range.

C. Concealed Materials:

1. Solid Wood: Any hardwood or softwood species, with no defects affecting strength or utility.
2. Plywood: Hardwood plywood complying with HPVA HP-1.
3. Plastic Laminate: Type BKL.
4. Particleboard: ANSI A208.1, Grade M-2.
5. Medium-Density Fiberboard: ANSI A208.2, Grade MD.
6. Hardboard: AHA A135.4, Class 1 tempered.

2.3 CABINET DESIGN

A. Flush overlay.

2.4 CABINET FABRICATION

A. Construction: Provide plastic-laminate-faced casework of the following minimum construction:

1. Bottoms and Ends of Cabinets, Shelves, and Tops of Wall Cabinets and Tall Cabinets: 3/4-inch- (19-mm-) thick particleboard, plastic-laminate faced on exposed surfaces.
2. Backs of Cabinets: 1/2-inch- (12.7-mm-) thick particleboard, plastic-laminate faced on exposed surfaces.
3. Drawer Fronts: 3/4-inch- (19-mm-) thick particleboard, plastic-laminate faced on both sides.
4. Drawer Sides and Backs: 1/2-inch- (12.7-mm-) thick solid wood or plywood, with glued dovetail or multiple-dowel joints.
5. Drawer Bottoms: 1/4-inch- (6.4-mm-) thick plywood glued and dadoed into front, back, and sides of drawers. Use 1/2-inch- (12.7-mm-) thick material for drawers more than 24 inches (600 mm) in width.
6. Doors 48 Inches (1200 mm) or Less in Height: 3/4 inch (19 mm) thick, with particleboard or medium-density fiberboard cores, solid wood stiles and rails, and plastic-laminate faced on both sides.
7. Doors More Than 48 Inches (1200 mm) in Height: 1-1/16 inches (27 mm) thick, with honeycomb cores, solid hardwood stiles and rails, and plastic-laminate faced on both sides.

B. Filler Strips: Provide as needed to close spaces between cabinets and walls, ceilings, and indicated equipment. Fabricate from same material and with same finish as cabinet fronts.

2.5 CABINET HARDWARE

A. General: Provide casework manufacturer's standard satin-finish, commercial-quality, heavy-duty hardware complying with requirements indicated for each type.

B. Hinges: Frameless Concealed Hinges (European Type): ANSI/BHMA A156.9, B01602, 135 degrees of opening, self-closing. Provide 2 for doors 48 inches (1200 mm) or less in height; 3 for doors more than 48 inches (1200 mm) in height.

C. Pulls: Solid aluminum, stainless steel, or chrome-plated brass; fastened from back with two screws. For sliding doors, provide stainless-steel or chrome-plated recessed flush pulls. Provide 2 pulls for drawers more than 24 inches (600 mm) in width.

D. Door Catches: Nylon-roller spring catch or dual, self-aligning, permanent magnet catch. Provide 2 catches on doors more than 48 inches (1200 mm) in height.

E. Drawer Slides: Powder-coated, full-extension, self-closing, heavy-duty drawer slides, designed to prevent rebound when drawers are closed; with nylon-tired, ball-bearing rollers; and complying with BHMA A156.9, Type B05091, and rated for 120 lbf (530 N).

F. Locks: Cam type, brass with chrome-plated finish; complying with BHMA A156.11, Type E07281.

1. Provide minimum of two keys per lock and two master keys. Key Casework differently per room. Lock core shall be removable with a control key, permitting Owner to easily change lock arrangements without tools.
2. **Provide locks on all drawers and doors.**

G. Adjustable Shelf Supports: Mortise-type, powder-coated steel standards and shelf rests complying with BHMA A156.9, Types B04071 and B04091.

2.6 ACCESSORIES

A. Reagent Shelves: Provide as indicated, fabricated from same material as adjacent countertop, unless otherwise indicated.

PART 3 - EXECUTION

3.1 EXAMINATION

A. Examine areas, with Installer present, for compliance with requirements for installation tolerances, location of reinforcements, and other conditions affecting performance of plastic-laminate laboratory casework.

1. Proceed with installation only after unsatisfactory conditions have been corrected.

3.2 INSTALLATION OF CABINETS

A. Install level, plumb, and true; shim as required, using concealed shims. Where casework abuts other finished work, apply filler strips and scribe for accurate fit, with fasteners concealed where practical.

B. Base Cabinets: Adjust top rails and subtops within 1/16 inch (1.5 mm) of a single plane. Fasten cabinets to utility-space framing, partition framing, wood blocking, or reinforcements in partitions with fasteners spaced not more than 24 inches (600 mm) o.c. Fasten adjacent cabinets together with joints flush, tight, and uniform. Align similar adjoining doors and drawers to a tolerance of 1/16 inch (1.5 mm).

C. Wall Cabinets: Adjust fronts and bottoms within 1/16 inch (1.5 mm) of a single plane. Fasten to hanging strips, masonry, partition framing, blocking, or reinforcements in partitions. Fasten each cabinet through back, near top, at not less than 24 inches (600 mm) o.c. Align similar adjoining doors to a tolerance of 1/16 inch (1.5 mm).

D. Install hardware uniformly and precisely. Set hinges snug and flat in mortises.

3.3 INSTALLATION OF ACCESSORIES

A. Install accessories according to Shop Drawings and manufacturer's written instructions.

3.4 CLEANING AND PROTECTING

A. Clean finished surfaces, touch up as required, and remove or refinish damaged or soiled areas to match original factory finish, as approved by Architect.

B. Protect countertop surfaces during construction with 6-mil (0.15-mm) plastic or other suitable water-resistant covering. Tape to underside of countertop at minimum of 48 inches (1200 mm) o.c.

3.5 CASEWORK SCHEDULE – Refer to drawings for types, sizes and locations of casework.

END OF SECTION 123216

SECTION 123661 - SIMULATED STONE COUNTERTOPS

PART 1 - GENERAL

1.1 RELATED DOCUMENTS

A. Drawings and general provisions of the Contract, including General and Supplementary Conditions and Division 01 Specification Sections, apply to this Section.

1.2 SUMMARY

A. Section Includes:

1. Quartz agglomerate countertops and backsplashes.

1.3 ACTION SUBMITTALS

A. Product Data: For countertop materials.

B. Shop Drawings: For countertops. Show materials, finishes, edge and backsplash profiles, methods of joining, and cutouts for plumbing fixtures.

C. Samples for Initial Selection: For each type of material exposed to view.

D. Samples for Verification: For the following products:

1. Countertop material, 6 inches (150 mm) square.

1.4 PROJECT CONDITIONS

A. Field Measurements: Verify dimensions of countertops by field measurements after base cabinets are installed but before countertop fabrication is complete.

1.5 COORDINATION

A. Coordinate locations of utilities that will penetrate countertops or backsplashes.

PART 2 - PRODUCTS

2.1 QUARTZ AGGLOMERATE COUNTERTOPS

A. Configuration: Provide countertops with the following front and backsplash style:

1. Front: Straight, slightly eased at top.
2. Backsplash: Straight, slightly eased at corner.
3. Endsplash: Matching backsplash.

B. Countertops: as indicated.

C. Backsplashes: as indicated.

D. Fabrication: Fabricate tops in one piece with shop-applied edges and backsplashes unless otherwise indicated. Comply with quartz agglomerate manufacturer's written instructions for adhesives, sealers, fabrication, and finishing.

1. Fabricate with loose backsplashes for field assembly.

2.2 COUNTERTOP MATERIALS

A. Quartz Agglomerate: Solid sheets consisting of quartz aggregates bound together with a matrix of filled plastic resin and complying with the "Physical Characteristics of Materials" Article of ANSI SS1.

1. Manufacturers: Subject to compliance with requirements, provide products by one of the following:

a. AS INDICATED ON FINISH LEGEND

2. Collection and Color: AS INDICATED ON FINISH LEGEND

3. Size: AS INDICATED ON FINISH LEGEND

PART 3 - EXECUTION

3.1 INSTALLATION

A. Tolerances:

1. Install countertops level to a tolerance of 1/8 inch in 10 feet (3 mm in 2.4 m).
2. Maximum variation in plane between adjacent pieces at joint: Plus or minus 1/16 inch.

B. Install fabrications in accordance with manufacturer's instructions and approved shop drawings.

C. Adhere fabrications with continuous beads of adhesive.

3.2 CLEANING

A. Clean fabrications in accordance with manufacturer's instructions.

3.3 PROTECTION

A. Protect installed fabrications with nonstaining sheet coverings.

END OF SECTION 123661

SECTION 126100- FIXED AUDITORIUM SEATING

PART 1: GENERAL

1.01 Section Includes:
A. Fixed seating for lectures where multiple seating is required.

1.02 Related Documents:
A. All applicable provisions of the Building and Contract Requirements, and Division 1 - General Requirements shall govern the work under this section.

1.03 Description of Work:
A. Provide all labor, materials, necessary equipment and services to complete the installation of the multiple seating, as indicated on the drawings, or as specified herein or both.

1.04 Performance:
A. Field performance shall be demonstrated by providing a list of not less than five (5) installations of similar specifications that have been in service for a minimum period of five (5) years.
B. Gray iron shall be of a quality and strength in accordance with ASTM A48-64 for Class 25 gray iron castings.
C. Wood used in the construction of the arms shall be hardwood. All veneers used in plywood shall be well seasoned hardwoods.

1.05 Submittals:
A. Complete Seat Plan: Submit drawings fully describing the seat plan developed from architects prints of the building. Include details of all chairs, sizes, widths, anchorage and accessories.

1.06 Quality Assurance:
A. All component parts of the product are to be made under direct control of the manufacturer.
Utilize testing and inspection procedures to assure uniform high quality component parts and finished product.

PART 2: PRODUCT

2.01 Acceptable Manufacturer:
A. Manufacturers and Products:
1. Manufacturer: KI, Product: Lancaster
2. Manufacturer: Sedia Systems, Inc. Product: E10 Auditorium Chair

B. All manufacturers, INCLUDING THE MANUFACTURER LISTED ABOVE, interested in bidding this portion of the work must submit a complete (2) two chair, working mock-up that complies with all portions of this specification. The mock-up shall be delivered to the office of the Architect a minimum of four days prior to bidding for review and approval by the Architect and owner. Only prior approved manufactures should be bid.

2.02 Operation:

A. The product has two independent, fully operative hinge mechanisms for a consistent three-quarter safely fold. The hinge application will not require adjustment or lubrication.

2.03 Construction:

A. Back: Back shall consist of an upholstered plywood front panel, and an exposed shaped plastic panel.
   1. The front panel shall be of 7-ply 7/16" thick plywood formed on a 34" radius curve.
   2. Padding shall consist of 2" thick Polyurethane foam, cemented to the plywood and covered with selected upholstering material.
   3. The exposed rear panel shall be of 5-ply construction with nominal 5/16" thickness and formed on the same radius as the front panel. The rear panel shall be 5-1/4" longer than the front panel with the additional length at the bottom of the back to protect the rear of the seat from the feet of the occupant behind.
   4. Method of attaching back to standards shall eliminate exposed fastening on upholstered face of back. Outer panel shall be attached to inner panel with seven #8 x 7/8 oval head screws.

B. Seat: Seat sizes shall accommodate 21" and 22" chairs.
   1. Seat shall be of the spring arch type and shall be composed of two parts, the upholstered spring frame and the seat foundation. Five (5) 8 gauge serpentine springs shall be attached to and suspended from a die formed 16 gauge steel frame with proper lateral bracing to resist spring tension. The points of spring attachment shall be open and well lubricated to permit quiet, free spring rotation thus eliminating noise and spring fatigue.
   2. Padding shall consist of an integrally molded polyurethane foam pad. It shall be molded to 100% bonded polyester netting and contoured to interlock with the spring frame, forming an integral one piece unit. It shall be non-hardening and non-oxidizing. It shall resist acids, alkalies, oils, greases, soaps, abrasions, moisture, mildew and tearing. The pad shall be approximately 3" thick at the front and 1-1/2" thick at the rear with an overall thickness of 2" over the center portion.
   3. The upholstery cover shall be of a panel side construction without welts and shall be fastened to the frame without the use of nails, tacks, or screws, thereby providing for easy reupholstering.
   4. Seat foundation shall be of one piece deep drawn die formed steel foundation, not less than 20 gauge thickness with edges rolled inward around entire perimeter. Foundation shall be free from screws and bolts on bottom, front and sides. It shall enclose the entire seat raising mechanism and at the point of hinge attachment, shall be reinforced by large steel plates of not less than 11 gauge thickness. It shall be possible to remove the upholstery portion of the seat from the steel foundation without removing the complete seat from the chair. Seat foundation can be provided with number plates located centrally near the front edge. Area provided for number plates shall be recessed to prevent wear and abrasion of the plate and eliminate snagging hazards. Attaching of number plates shall be by a tamper-resistant mechanical fastening.
   5. Seat hinge shall be completely enclosed in seat assembly and shall automatically fold to a 3/4 uniform position at all times without adjustment. It shall also fold 100% to provide additional clearance when necessary. Hinges shall consist of a cast iron pivot securely fastened to the standards by a heavy bolt to prevent possibility of the hinge pivot being disengaged from the standard. Rotation of the seat about hinge pivot shall be on a self lubricating Delrin bearing requiring no maintenance. Both the up and down stops on the seat shall be cushioned with Neoprene rubber to reduce

noise.

C. Standards: Standards may be floor mounted or riser mounted (6"minimum) as specified.
   1. Solid cast iron casting with flush outer surface and integrally cast in raceway for concealment of aisle light wiring.
      a. Floor Mounted: Standard shall be of one integral piece gray iron pedestal shaped design. The foot pad shall measure a minimum of 7" long x 2-5/8" wide. The cast iron standard contains anchor points for holding chair back, seat cushion and arm rest in accurate and secure position. Standards shall be cast to fit the floor incline to maintain proper seat height.

D. Arm Rests: Arm rests for end treatments outlined above and for middle standards shall be wood.
   1. Wooden Arm Rests: The wooden arm rests shall be of solid wood construction, finished in lacquer with the edges well rounded. The under surface of the arm rest shall be provided with two rounded "T" slots to secure arms to lugs on cast iron standards.

E. The tablet arm spring and pivot mechanism shall be housed in a cast iron support, which shall be attached to the middle and end standards with a minimum of three bolts, lock washers and nuts.

F. The tablet arm writing surface shall be made of a simulated pattern composed of a laminated panel, applied to a moisture resistant 9-ply plywood core with an integral burnished edge and shall be attached to the tablet arm support by no less than six screws.

G. The tablet arms shall provide writing surfaces measuring approximately 16-1/8" wide x 16-1/8" long offering 196 sq. in. of writing surface for the oversize tablet arm. The tablet arm assembly shall be capable of supporting a critical load of at least 200 lbs. on a point directly in front of the occupant.

H. The tablet arms shall have a pecan veneered plywood finish to match paneling in room.

I. End Panels shall be a steel panel with veneered plywood finish to match paneling in classroom.

J. All seats shall be numbered.

K. Refer to drawings for the profile of the floor construction. The contractor is responsible for verifying this information.

L. Upholstery on chair seat and back: As selected by Architect from Manufacturer's complete line of fabrics.

M. Provide aisle light and required wiring.

PART 3: INSTALLATION, EXECUTION, AND WORKMANSHIP

3.01 Preparation of site shall be by the General Contractor. Any deviation of site conditions contrary to approved shop drawings shall be called to the attention of the architect.

3.02 Delivery to the job site shall be coordinated by the general contractor. Proper storage of the product before installation and continued protection during and after the installation shall be the responsibility of the general contractor.

3.03 Installation shall be by an authorized factory trained installer, or by a capable superintendent under whose direction the installation is to be performed in a manner satisfactory to the architect, owner or both.

3.04 Installation will be in accordance to the approved seat plan and drawings.

3.05 The complete installation of the product as called for, and detailed on the drawings, shall be provided in strict accordance with the drawings and manufacturer's standard specification, instructions and recommendations.

Wood Panels: "Tiger Striping" will not be allowed. The finished wood product shall have a uniform appearance.

END OF SECTION 126100

SECTION 126101 - FIXED LECTURE TABLES WITH INTEGRAL SWING AWAY SEATS

PART 1: GENERAL

1.01 Section Includes:
A. Fixed lecture tables with integral swing away seats is required.

1.02 Related Documents:
A. All applicable provisions of the Building and Contract Requirements, and Division 1 - General Requirements shall govern the work under this section.

1.03 Description of Work:
A. Provide all labor, materials, necessary equipment and services to complete the installation of the multiple seating, as indicated on the drawings, or as specified herein or both.

1.04 Performance:
A. Field performance shall be demonstrated by providing a list of not less than five (5) installations of similar specifications that have been in service for a minimum period of five (5) years.
B. Gray iron shall be of a quality and strength in accordance with ASTM A48-64 for Class 25 gray iron castings.
C. Wood used in the construction of the arms shall be hardwood. All veneers used in plywood shall be well seasoned hardwoods.

1.05 Submittals:
A. Complete Seat Plan: Submit drawings fully describing the seat plan developed from architects prints of the building. Include details of all chairs, sizes, widths, anchorage and accessories.

1.06 Quality Assurance:
A. All component parts of the product are to be made under direct control of the manufacturer.
Utilize testing and inspection procedures to assure uniform high quality component parts and finished product.

PART 2: PRODUCT

2.01 Acceptable Manufacturer:
A. Manufacturers:
KI Seating – Fixed Seminar Tables with Swing Away Seating
And
Sedia Systems, Inc – Fixed Seminar Tables with Swing Away Seating

D. <u>All manufacturers, INCLUDING THE MANUFACTURER LISTED ABOVE, interested in bidding this portion of the work must submit a complete (2) two chair, working mock-up that complies with all portions of this specification. The mock-up shall be delivered to the office of the Architect a minimum of four days prior to bidding for review and approval by the Architect and owner. Only prior approved manufactures should be bid.</u>

2.02 Description:

A. The product is a single support pedestal table with sculptured plastic upholstery padded seat and back Acton chair topper. The table supports shall be attached to the floor and have two chairs mounted on a cantilevered beam and pivot mechanism. These tables are designed to be used in connecting sections of tables to form straight or curved rows.

The product is a pedestal support table with upholstered or plastic chair toppers. The table supports shall be attached to the floor and have up to two chairs, each mounted on cantilevered beams with a self-return pivot mechanism. Each chair is supported by height adjustable cylinders with 360 degree rotation which returns to the original position when unoccupied. The tables are designed to be used in connecting table sections to form continuous straight or curved rows.

2.03 Construction:

A. Chair Upper:

1. Frame: The frame shall be formed of 14 gauge .083 welded seam, cold rolled, A.K.D.Q. steel tubing. A 11 3/4" 16 gauge steel inner reinforcement tube shall extend from the center of the arms to 4 ½" above the seat pan. Two side frame halves shall be joined with 3" long inner reinforcement tubes welded in place. A separate formed tubular frame section shall be welded to the side frame providing support to the front area of the seat forming a lateral cross brace under the seat between the frame halves.

2. Seat and Back: The seat and back shall be a molded copolymer plastic color clear through with soft etch texture, available in manufacturer's standard colors. The seat shall attach to the frame by locking onto the seat frame at the front and is held in place by two 3/16" expansion rivets at the rear of the frame. The back shall be attached by four #8-32 x 5/8" chrome plated steel oval head machine screws through the rear of the back support tube and into T-nuts retained in recesses molded into the back. Plastic shall be a minimum of 20% post consumer recycled content.

3. An upholstered option shall be available and fully cover the front surface of the seat and back. The upholstery base shall be made of a 1/8" fiberglass reinforced plastic insert molded to the shape of the seat and back. The inserts shall be ½" of foam glued to the surface which has been covered with upholstery. The inserts shall be attached to the seat and back by #8-32 x 3/8" truss head machine screws.

B. Pedestal Table and Chair Support:
1. The support consists of an 11 gauge flat oval steel tube 1.60" x 3.89" welded to a ¼" thick steel floor attachment plate 8" x 5.5". The upper portion of the tube shall be canted forward at approximately 30 degrees. Die-formed steel adjustable top brackets shall be bolted to the top end of the tube allowing for final field adjustment. A cast ductile iron pivot bracket shall be inserted into the lower vertical section of the table leg and securely fastened by two heavy machine screws. Up to two cantilevered tubular steel chair support arms with steel pivot housings at one end shall be attached, using 0.75" solid steel pins, to the cast iron pivot bracket. The opposite end of the cantilever arm has a tubular steel tapered sleeve welded to the arm which accepts a height adjustable 360 degree swivel cylinder with self-return-to-center feature. The cylinder will adjust 2" in height and automatically raises the chair to its highest and centered position when unoccupied providing a consistent

appearance. The pivot mechanism provides smooth accurate forward storage of the chairs when unoccupied.

2. The entire unit shall be designed to provide 27" center-to-center spacing between the chairs when occupied or as indicated on the drawings.

C. Table Top:

1. Tables are custom manufactured to the specific room size for each project. Table configurations are curved (refer to drawings). Table end corners shall have 0.12" radius.

2. The table top shall be 1-1/4" thick consisting of a 45 lb/cu ft density particle board core to which a .050" high pressure laminate has been bonded to the top surface with a .050" backing sheet bonded to the bottom surface for a balanced construction.

3. Edges of the table top: Shall be 9/16" tapered wood in the pecan (hickory) and finished to match the door and paneling on this project.

4. Wood spline and tight joint fasteners shall be used to join adjacent table surfaces forming a continuous table top.

2.04 Finish:

A. Chair Frame: The frame will be black powder coated.

B. Pedestal Table Supports: Powder coated with the following process. Powder coating process: Metal Parts: All exposed cast iron and steel parts shall be cleaned and powder coated. Finish parts with an electrostatic system

2.05 Test Procedures and Requirements

A. Drop Impact Test to Top
Table pedestals shall be securely anchored to the floor. A 200 lb. sand bag shall be dropped from a 2" height onto the center of the table top midway between adjacent pedestals, with deflection not to exceed 1/4" with the load remaining on the top. With the load removed, there shall be no permanent deflection or damage to the top or supporting structure.

B. Vertical Static Load to Cantilevered Top
A 300 lb. static load shall be applied to the end of a cantilevered top 27" from the pedestal. There shall be no permanent distortion of the top, the structure or loosening of fasteners.

C. Drop Impact to Seat
The seat shall be swung out to the fully extended position. A 100 lb. bag shall be dropped 24" onto the center of the seat. The seat and supporting structure shall withstand this impact without damage. A drop impact shall be imposed on the center of the seat by a 40 lb. cylindrical bag. The chair shall be subjected to 1,000 impacts each through 4", 6", 8", and 10" drops at 18 drops per minute. Chair shall withstand this test without any structural failure that will impair its usefulness.

D. Horizontal Static Load to Back
With the chair swivel and swing arm locked to prevent movement, a horizontal load shall be applied to the top center of the back. The chair shall withstand a forward force of 250 lbs. and a rearward force of 250 lbs. with permanent set not to exceed 1/2".

E. Swinging Arm Test
A 200 lb. load shall be placed on the seat. The arm shall be swung through its full travel arc 50,000 times. There shall be no failure of bearings or of the return mechanism.

PART 3: INSTALLATION, EXECUTION, AND WORKMANSHIP

3.01 Preparation of site shall be by the General Contractor. Any deviation of site conditions contrary to approved shop drawings shall be called to the attention of the architect.

3.02 Delivery to the job site shall be coordinated by the general contractor. Proper storage of the product before installation and continued protection during and after the installation shall be the responsibility of the general contractor.

3.03 Installation shall be by an authorized factory trained installer, or by a capable superintendent under whose direction the installation is to be performed in a manner satisfactory to the architect, owner or both.

3.04 Installation will be in accordance to the approved seat plan and drawings.

3.05 The complete installation of the product as called for, and detailed on the drawings, shall be provided in strict accordance with the drawings and manufacturer's standard specification, instructions and recommendations.

Scope Clarification 1: The fixed lecture tables with integral swing away seats shall have 15" tall laminate modesty panels without end panels. Panels shall have a T band edge. Laminate color to be selected by architect from manufacturer's full line of available colors.

Scope Clarification 2: Power connections are not to be provided at the fixed lecture tables with swing away seats.

Scope Clarification 3: The contractor shall provide straight and curved tables and delineated on the drawings.

END OF SECTION 126101

SECTION 142123 - MACHINE ROOM-LESS ELECTRIC TRACTION PASSENGER ELEVATORS

PART 1 GENERAL

1.01 SUMMARY

A. Section includes Machine room-less electric traction passenger elevators as shown and specified. Elevator work includes:

1. Gearless electric traction passenger elevators.
2. Elevator car enclosures, hoistway entrances and signal equipment.
3. Operation and control systems.
4. Accessibility provisions for physically disabled persons.
5. Equipment, machines, controls, systems and devices as required for safely operating the specified elevators at their rated speed and capacity.
6. Materials and accessories as required to complete the elevator installation.

B. Work Not Included: General contractor shall provide the following in accordance with the requirements of the Model Building Code and ASME A17.1 Code. For specific rules, refer to ASME A17.1, Part 2 for traction elevators. State or local requirements must be used if more stringent. The cost of this work is not included in the TK Elevator's proposal since it is a part of the building construction.

1. A plumb and legal hoistway, properly framed and enclosed an including a pit of proper depth, and a pit ladder for each elevator. Hoistway walls require a minimum two hours of fire rating. Hoistway should be clear and plumb with variations not to exceed 1/2" at any point. Drains, lights, access doors, waterproofing and hoistway ventilation, as required.
2. Elevator controller space
    a. Door jamb controller option - controller landing wall thickness must be a minimum of 8 1/2 inches thick. This is due to the controller being mounted on the top floor landing in the door frame on the return side of the door. For center opening doors, the controller is located on the right hand frame (from inside the elevator cab looking out). Provide telephone line, light fixture (200 lx / 19 fc), and convenience outlet in the hoistway at the landing where the elevator controller is located. Final location must be coordinated with elevator contractor. These requirements must be coordinated between the general contractor and the elevator contractor.
3. Hoistway must be maintained between 32°F (0°C) and 122°F (50°C) measured at the machine.
4. Adequate supports to carry the loads of all equipment, including overhead machine and machine beams located in hoistway including supports for guide rail brackets.
5. Complete 3 phase connections from the electric power mains to each controller, including necessary circuit breakers and fused mainline disconnect switches unless otherwise specified herein by elevator manufacture.

6. Electric power of the same characteristics as the permanent supply without charge for the construction, testing and adjusting.
7. Provide proper piping and conduit.
8. Divider beams for rail bracket support as required.
9. Cutting of walls floor, etc. and removal of such obstructions as may be necessary for proper installation of the elevator.
10. Grouting of door sills, hoistway frames, and signal fixtures after installation of the elevator equipment.
11. All painting, except as otherwise specified.
12. Provide hoistway walls designed and constructed in accordance with the required fire rating (including those places where elevator fixture boxes, rail bracket fastenings, and any other penetration into the hoistway walls).
13. Temporary enclosures, barricades and other protection from open hoistways and elevator work area during the time the elevator is being installed to meet all permanent installation safety codes. A temporary work platform to be provided at the top landing across the hoistway; if required, it should conform to all code and safety requirements.
14. Smoke detector /sensing devices and contacts wired to elevator control as required by local code. A means to automatically disconnect the main line power supply to the elevator prior to the application of water in the elevator controller room shall be furnished by the electrical contractor. This means shall not be self-resetting.
15. Before erection of rough walls and doors; erect hoistway sills, headers, and frames. After rough walls are finished; erect fascias and toe guards. Set sill level and slightly above finished floor at landings.
16. A standby power source, including necessary transfer switches and auxiliary contact, where elevator operation from an alternate power supply is required.
17. Adequate storage facilities for elevator equipment prior to and during installation at ground level within 150 feet of hoistway.
18. Setting of anchors and sleeves.
19. Install bevel guards at 75° on all recesses, projections or setbacks over 2" (4" for A17.1 2000 areas) except for loading or unloading.
20. For car light and fan: provide a feeder and branch wiring circuits to elevator control cabinet.
21. Locate a light fixture (200 lx / 19 fc) and convenience outlet in pit with switch located adjacent to the access door.
22. Where pit access is by means of the lowest hoistway entrance, a vertical ladder of non-combustible material extending 42" minimum, (48" minimum for A17.1-2019 areas) shall be provided at the same height, above sill of access door or handgrips.

1.02 SUBMITTALS

A. Product data: When requested, the elevator contractor shall provide standard cab, entrance and signal fixture data to describe product for approval.

B. Shop drawings:
1. Show equipment arrangement in the corridor, pit, and hoistway and/or optional control room. Provide plans, elevations, sections and details of assembly, erection, anchorage, and equipment location.
2. Indicate elevator system capacities, sizes, performances, safety features, finishes and other pertinent information.
3. Show floors served, travel distances, maximum loads imposed on the building structure at points of support and all similar considerations of the elevator work.
4. Indicate electrical power requirements and branch circuit protection device recommendations.

C. Paint selection: Submit manufacturer's standard selection charts for exposed finishes and materials.

D. Integrated laminate selection: Submit manufacturer's standard selection charts for exposed finishes and materials.

E. Metal Finishes: Upon request, standard metal samples provided.

F. Operation and maintenance data. Include the following:
1. Generic owner's manuals and no wiring diagrams.
2. Parts list, with recommended parts inventory.

1.03 QUALITY ASSURANCE

A. Manufacturer Qualifications: An approved manufacturer with minimum 15 years of experience in manufacturing, installing, and servicing elevators of the type required for the project.
1. The manufacturer of machines, controllers, signal fixtures, door operators, cabs, entrances, and all other major parts of elevator operating equipment.
   a. The major parts of the elevator equipment shall be manufactured by the installing company, and not be an assembled system.
2. The manufacturer shall have a documented, on-going quality assurance program.
3. ISO-9001:2000 Manufacturer Certified
4. ISO-14001:2004 Environmental Management System Certified
5. LEED Gold certified elevator manufacturing facility.

B. Installer Qualifications: The manufacturer or an authorized agent of the manufacturer with not less than 15 years of satisfactory experience installing elevators equal in character and performance to the project elevators.

C. Regulatory Requirements:
1. ASME A17.1 Safety Code for Elevators and Escalators, latest edition or as required by the local building code.

2. NFPA 70 National Electrical Code.
3. NFPA 80 Fire Doors and Windows.
4. Americans with Disabilities Act - Accessibility Guidelines (ADAAG)
5. Section 407 in ICC A117.1, when required by local authorities
6. CAN/CSA C22.1 Canadian Electrical Code
7. CAN/CSA B44 Safety Code for Elevators and Escalators.

D. Fire-rated entrance assemblies: Opening protective assemblies including frames, hardware, and operation shall comply with ASTM E2074, CAN4-S104 (ULC-S104), UL10(b), and NFPA Standard 80. Provide entrance assembly units bearing Class B or 1 1/2 hour label by a Nationally Recognized Testing Laboratory (2 hour label in Canada).

E. Inspection and testing:

1. Elevator Installer shall obtain and pay for all required inspections, tests, permits and fees for elevator installation.
2. Arrange for inspections and make required tests.
3. Deliver to the Owner upon completion and acceptance of elevator work.

1.04 DELIVERY, STORAGE AND HANDLING

A. Manufacturing shall deliver elevator materials, components and equipment and the contractor is responsible to provide secure and safe storage on job site.

1.05 PROJECT CONDITIONS

A. Temporary Use: Elevators shall not be used for temporary service or for any other purpose during the construction period before Substantial Completion and acceptance by the purchaser unless agreed upon by Elevator Contractor and General Contractor with signed temporary agreement.

1.06 WARRANTY

A. Warranty: Submit elevator manufacturer's standard written warranty agreeing to repair, restore or replace defects in elevator work materials and workmanship not due to ordinary wear and tear or improper use or care for 12 months after final acceptance.

1.07 MAINTENANCE

A. Furnish maintenance and call back service for a period of 24 months for each elevator after completion of installation or acceptance thereof by beneficial use, whichever is earlier, during normal working hours excluding callbacks.

1. Service shall consist of periodic examination of the equipment, adjustment, lubrication, cleaning, supplies and parts to keep the elevators in proper operation. Maintenance work, including emergency call back repair service, shall be performed by trained employees of the elevator contractor during regular working hours.

2. Submit parts catalog and show evidence of local parts inventory with complete list of recommended spare parts. Parts shall be produced by manufacturer of original equipment.
3. Manufacturer shall have a service office and full time service personnel within a 100 mile radius of the project site.

PART 2 PRODUCTS

2.01 MANUFACTURERS

A. Manufacturer:
Basis of Design – "TK Elevator's EOX Self-Supported Machine Room-Less elevator".
And equivalent product by Otis Elevator.

2.02 MATERIALS, GENERAL

B. All Elevator Cab materials including frame, buttons, lighting, wall and ceiling assembly, laminates and carpet shall have an EPD and an HPD.

C. Colors, patterns, and finishes: As selected by the Architect from manufacturer's full range of standard colors, patterns, and finishes.

D. Steel:
1. Shapes and bars: Carbon.
2. Sheet: Cold- and hot-rolled stainless steel sheet, galvanized.
3. Finish: Factory-applied paint for structural parts, painted for architectural parts. Color selection must be based on elevator manufacture's standard selections.

E. Integrated laminate: Decorative surface finishes, pressure sensitive, acrylic type, nominal 0.014" thickness. Laminate selection must be based on elevator manufacture's standard selections.

F. Flooring by others.

2.03 HOISTWAY EQUIPMENT

A. Platform: Fabricated frame of formed or structural steel shapes, gusseted and riveted/clinched. The car platform shall be designed and fabricated to support one-piece loads weighing up to 25% of the rated capacity.

B. Deflector Sheaves: None

C. Guide Rails: Dry, non-lubricated steel, fastened to the building with steel brackets.

D. Guides: Slide guides shall be mounted on top and bottom of the car.

E. Buffers: Provide substantial buffers in the elevator pit. Mount buffers on continuous channels fastened to the elevator guide rail or securely anchored to the pit floor. Predefined buffer stands for 4' and 5' pit depths.

F. Machine: The hoisting machine shall be a compact energy efficient permanent magnet Gearless traction type, consisting of PMAC motor, brake and driving sheave mounted on a rigid bedplate in the top of the hoistway. A large solid, forged shaft shall serve as a support for the motor rotor assembly and for the drive sheave and brake system. It shall be supported by roller bearings mounted in the machine housing.

G. Drive System:

1. The drive system shall be of the Variable Voltage Variable Frequency (VVVF) regenerative.
2. The system shall be a vector controlled pulse-width modulated AC drive. The variable voltage variable frequency drive shall convert the AC power supply using a two-step process to a variable voltage variable frequency power supply for use by the hoist motor.
3. The speed control shall be by means of vector control providing direct torque and field excitation automatically provided by permanent magnet. A digital absolute velocity encoder shall be provided giving feedback to the controller on armature position and motor speed.
4. Dual solid state electronics (IGBT Insulated Gate Bipolar Transistor) in series shall be used in place of mechanical contactors.

H. Motor/Machine: The motor shall be PMAC, totally enclosed, non-ventilated with class "F" insulation. The motor armature shall be dynamically balanced and supported by roller bearings of ample capacity. The armature and driving sheave shall be properly balanced for smooth, high-speed elevator performance. The PM machine shall be mounted horizontally in the top of the hoistway in a unitized formed steel structure on bearing plates furnished by the elevator installer. The unitized formed steel structure shall be securely fastened to the supports supplied by other trades.

I. Brake: The brake shall be a spring applied electric brake; held open by an electro-magnet actuated by a digital brake controller and designed to make smooth, positive stops. The Brake shall be designed to automatically apply in the event of interruption of power supply from any cause. Operation and control of the brake shall be all digital. The setting and lifting of the brake shall be software based and all electronic. All adjustments and setup of the brake shall be made using a PC interface. No contactors or resistors shall be used in the actuation of the brake.

J. Suspension Belts and Governor Rope: Suspension belts shall be flat belts of polyurethane with an inner core of 14 steel cords with an FT1 fire rating such that hoistway sprinklers are not required by NFPA-13. Each belt shall have a suspension strength of 64 KN (14,388 pounds).

1. Three belts.
2. Suspension tension monitor shall detect differences in belt tension and for loss of tension. If fault is detected, the car shall stop at the nearest floor and an Out of Service call be registered.
3. Trip criteria shall be monitored, and data shall be stored in redundant non-volatile locations. Belts shall be replaced prior to the end of service life. Messages shall be issued at 180, 90, and 30 days prior to the last day of service life.
4. Governor ropes shall be of steel wire construction.
5. Any special tools, devices, software or equipment required for monitoring the wear of suspension shall be included with the installation of the equipment and become the property of the owner at time of elevator completion. This includes special ongoing monitoring systems, special tools and instruction needed to monitor the suspension system.

K. Counterweight: Counterbalance each elevator for smooth and economical operation by using steel and/or cement weights securely fastened in a steel counterweight frame. Counterweight shall equal the weight of the complete elevator car and approximately 50 percent of the specified capacity load.

L. Safety and Governor: Car safety shall be mounted on the bottom members of the car frame and be operated by a centrifugal speed governor. The governor shall be designed to cut off power to the motor and apply the brake whenever the governor indicates the car has excessive speed. The governor shall function when the car over speeds.

M. Emergency Terminal Limits: Place electric limit devices in the hoistway near the terminal landings. Limit switch(es) shall be designed to cut off the electric current and stop the car if it runs beyond either terminal landing.

N. Automatic Self-Leveling: Provide each elevator car with a self-leveling feature to automatically bring the car to the floor landings and correct for over travel or under travel. Self-leveling shall, within its zone, be automatic and independent of the operating device. The car shall be maintained approximately level with the landing irrespective of its load.

2.04 HOISTWAY ENTRANCES

A. Doors and Frames: Provide complete hollow metal type hoistway entrances at each hoistway opening bolted\knock down construction.

1. Manufacturer's standard entrance design consisting of hangers, doors, hanger supports, hanger covers, fascia plates (where required), sight guards, and necessary hardware.

2. Communication failure indicator: A Communication failure is a jewel that is located in the jamb and lights up if the connection with the phone in the elevator becomes faulty. Communication failure is tested on the SIL3 rated devices by inspectors to ensure the car will not run or accept a car call when there is a loss of communication between the car and controller.
3. Main landing door & frame finish: with no. 4 brushed finish entrance frame.
4. Typical door & frame finish: with no. 4 brushed finish entrance frame.

B. Interlocks: Equip each hoistway entrance with an approved type of interlock, tested as required by code. Provide door restriction devices as required by code.

C. Door Hanger and Tracks: Provide sheave type two-point suspension hangers and tracks for each hoistway horizontal sliding door.

1. Sheaves: Polyurethane tires with ball bearings properly sealed to retain grease.
2. Hangers: Provide an adjustable device beneath the track to limit the up thrust of the doors during operation.
3. Tracks: Drawn steel shapes, smooth surface and shaped to conform to the hanger sheaves.

D. Hoistway Sills: Extruded metal, with groove(s) in top surface. Provide mill finish on aluminum.

2.05 PASSENGER ELEVATOR CAR ENCLOSURE

A. Car Enclosure:

1. Walls: Cab type, stainless steel. Wall panels shall be constructed of stainless steel, no 4 brushed finish. Columns shall be stainless steel.
2. Canopy: Galvanized steel with chain rope exit.
3. Ceiling: Stainless steel downlight type, metal pans with suspended LED downlights. Number of downlights shall be dependent on platform size with a minimum of four. The metal pans shall be finished with a stainless steel, no. 4 brushed finish.
4. Cab Fronts, Return, Transom, Soffit and Strike: Provide panels faced with brushed stainless steel.
5. Doors: Horizontal sliding car doors reinforced with steel for panel rigidity. Hang doors on sheave type hangers with polyurethane tires that roll on a polished steel track and are guided at the bottom by non-metallic sliding guides.
    a. Door Finish: Stainless steel.
    b. Cab Sills: Extruded, aluminum mill finish.
6. Support rail: Provide 1.5" (38 mm) diameter formed cylindrical metal bar on side and/or rear walls on front opening cars and side walls only on front and rear opening cars. Support rails shall have a stainless steel, no. 4 brushed finish.
7. Ventilation: Manufacturer's standard exhaust fan, mounted on the car top.
8. Protection pads: Not required

B. Car Top Inspection: Provide a car top inspection station with an "Auto-Inspection" switch, an "emergency stop" switch, and constant pressure "up and down" direction and safety buttons to make the normal operating devices inoperative. The station shall give the inspector complete control of the elevator. The car top inspection station shall be mounted in the door operator assembly.

2.06 DOOR OPERATION

A. Door Operation: Provide a direct or alternating current motor driven heavy duty operator designed to operate the car and hoistway doors simultaneously. The door control system shall be digital closed loop and the closed loop circuit shall give constant feedback on the position and velocity of the elevator door. The motor torque shall be constantly adjusted to maintain the correct door speed based on its position and load. All adjustments and setup shall be through the computer based service tool. Door movements shall follow a field programmable speed pattern with smooth acceleration and deceleration at the ends of travel. The mechanical door operating mechanism shall be arranged for manual operation in event of power failure. Doors shall automatically open when the car arrives at the landing and automatically close after an adjustable time interval or when the car is dispatched to another landing. AC controlled units with oil checks, or other deviations are not acceptable.

1. No Un-Necessary Door Operation: The car door shall open only if the car is stopping for a car or hall call, answering a car or hall call at the present position or selected as a dispatch car.
2. Door Open Time Saver: If a car is stopping in response to a car call assignment only (no coincident hall call), the current door hold open time is changed to a shorter field programmable time when the electronic door protection device is activated.
3. Double Door Operation: When a car stops at a landing with concurrent up and down hall calls, no car calls, and no other hall call assignments, the car door opens to answer the hall call in the direction of the car's current travel. If an onward car call is not registered before the door closes to within 6 inches of fully closed, the travel shall reverse and the door shall reopen to answer the other call.
4. Nudging Operation: The doors shall remain open as long as the electronic detector senses the presence of a passenger or object in the door opening. If door closing is prevented for a field programmable time, a buzzer shall sound. When the obstruction is removed, the door shall begin to close at reduced speed. If the infra-red door protection system detects a person or object while closing on nudging, the doors shall stop and resume closing only after the obstruction has been removed.
5. Door Reversal: If the doors are closing and the infra-red beam(s) is interrupted, the doors shall reverse and reopen. After the obstruction is cleared, the doors shall begin to close.
6. Door Open Watchdog: If the doors are opening, but do not fully open after a field adjustable time, the doors shall recycle closed then attempt to open six times to try and correct the fault.

7. Door Close Watchdog: If the doors are closing, but do not fully close after a field adjustable time, the doors shall recycle open then attempt to close six times to try and correct the fault.
8. Door Close Assist: When the doors have failed to fully close and are in the recycle mode, the door drive motor shall have increased torque applied to possibly overcome mechanical resistance or differential air pressure and allow the door to close.

B. Door Protection Device: Provide a door protection system using microprocessor controlled infra-red light beams supporting 2D or 3D light curtains per code. The beams shall project across the car opening detecting the presence of a passenger or object. If door movement is obstructed, the doors shall immediately reopen.

2.07 CAR OPERATING STATION

Car Operating Station, General: The main car control in each car shall contain the devices required for specific operation mounted in a surface-mounted panel requiring no applied faceplate. COP shall have a brushed stainless steel finish. The main car operating panel shall be mounted in the return and comply with handicap requirements. Pushbuttons that illuminate using long lasting LED's shall be included for each floor served, and emergency buttons and switches shall be provided per code. Switches for car light and accessories shall be provided. Visual highlight is the standard equipped, integrated multimedia display.

A. Emergency Communications System: Integral phone system provided. For improved accessibility, there are visual and acoustic confirmation for button inputs as well as a voice synthesizer for travel and floor announcements.

B. Column Mounted Car Riding Lantern: A car riding lantern shall be installed in the elevator cab and located in the entrance. The lantern, when illuminated, will indicate the intended direction of travel. The lantern will illuminate, and a signal will sound when the car arrives at a floor where it will stop. The lantern shall remain illuminated until the door(s) begin to close.

C. Special Equipment:
Limited Access Operation: Keyswitch and card reader space. (card reader by others)

D. Digital Services: Cloud-based IoT monitoring system comes standard with these options:

ADA Phone - Code Compliant Cellular Connectivity

E. Digitally Native: Digital expansion for evolving ecosystem of digitally augmented services. DEP infotainment display comes standard.

2.08 CONTROL SYSTEMS

A. Controller: The elevator control system shall be microprocessor based and software oriented. The system shall operate in real time, continuously analyzing the car(s) changing position, condition, and work load. All controller and operational circuits including the brake control and drive system shall be digital. Control of the elevator shall be automatic in operation by means of push buttons in the car numbered to correspond to floors served, for registering car stops, and by "up-down" push buttons at each intermediate landing and "call" push buttons at terminal landings.

1. Momentary pressing of one or more buttons shall dispatch the car to the designated landings in the order in which the landings are reached by the car, irrespective of the sequence in which the buttons are pressed. Each landing call shall be canceled when answered.
2. When the car is traveling in the up direction, it shall stop at all floors for which car buttons or "up" hall buttons have been pressed. The car shall not stop at floors where "down" buttons have been pressed, unless the stop for that floor has been registered by a car button or unless the down call is at the highest floor for which any buttons have been pressed. Pressing the "up" button when the car is traveling in the down direction shall not intercept the travel unless the stop for that floor has been registered by a car button or unless the up call is the lowest for which any button has been pressed.
3. When the car has responded to its highest or lowest stop, and stops are registered for the opposite direction, its direction of travel shall reverse automatically and it shall then answer the calls registered for that direction. If both up and down calls are registered at an intermediate floor, only the call corresponding to the direction of car travel shall be canceled upon the stopping of the car at the landing.
4. A car that is stopping for the last hall call in the preference direction, and that hall call is for the opposite direction with no onward car calls, shall reverse preference when the selector position advances to the landing at which the car is committed to stop. A car that is stopping for the last hall call in the preference direction, and that hall call is for the same direction, shall hold its preference until the door is almost closed allowing time for a passenger to register an onward car call which shall maintain the preference. If no car call is registered before the door is almost closed, the car shall lose its preference and shall be available to accept calls in either direction.

B. Operation: Selective Collective – ETA based. The system is optimized to get a car to the floor where a hall call has been registered, in the shortest time. The system receives input information from standard call pushbuttons located in the hall, car position and car load information from individual car loadweighers.

1. When group operation is required, the group supervisory operation shall be embedded within selected car controllers. No separate group controller shall be supplied. The microprocessor shall constantly scan the system for hall calls. When hall calls are registered, the control system shall immediately calculate the estimated

time for arrival using such information as, number of floors to travel from the current position, the time it takes to travel one floor at top speed, calls assigned to a car, and car reversal time to respond to a call in the opposite direction of travel. When a car's status changes or additional hall calls are registered, the estimated time of arrival shall be recalculated and calls reassigned if necessary.

2. Traffic Pattern: The microprocessor shall provide flexibility to meet well defined patterns of traffic, including up peak, down peak, and heavy interfloor demands, and adjust for indeterminate variations in these patterns which occur in buildings.
3. Artificial Intelligence: Artificial Intelligence shall be an integral part of the group control system software. The enhanced artificial intelligence shall optimize the interfloor traffic performance. Inputs for the artificial intelligence shall include accurate passenger load from an electronic loadweigher, probable car calls generated from each hall call, type of building and observed traffic patterns.

C. Load Weighing Device: Provide a load weighing device on each car which, when the particular car is filled to an adjustable percentage of the capacity load, shall cause the car to bypass landing calls but not car calls. The passed landing calls shall remain registered for the next following car.

1. The device shall be unaffected by the action of compensating chain or rope. The device shall detect a 50-pound (23 Kg.) load change under all conditions.
2. The load sensor shall use a load cell to accurately measure the weight in the car. The information shall be transferred via a serial link to the elevator controller.

D. Anti-Nuisance Call Control: The microprocessor control system shall evaluate the number of people on the car and compare that value to the number of car calls registered. If the number of car calls exceeds the number of people by a field programmable value, the car calls shall be canceled after the first call has been answered.

E. Position Selector: The position selector shall be part of the microprocessor system. The car position in the hoistway shall be digitized through a primary position encoder. The microprocessor control system shall store the floor position and slow down points in memory.

F. Motion Control: The drive control system shall be dual-loop feedback system based primarily on car position. The velocity profile shall be calculated by the microprocessor control system producing extremely smooth and accurate stops. The velocity encoder shall permit continuous comparison of machine speed to velocity profile and to actual car speed. This accurate position/velocity feedback shall permit a fast and accurate control of acceleration and retardation.

G. Motor Pre-Torque: Current shall be applied to the elevator drive before the brake is released and the speed pattern is dictated to eliminate roll back and sling shot effects of unbalanced loads in the car. The electronic loadweigher shall determine the load on the car determining a pre-torque reference to send to the drive.

H. Emergency Power Operation: In the event of power loss, this elevator(s) should be equipped with a battery powered automatic rescue operation device. This operation is designed to only move the car up or down to the nearest landing depending on the load in the car. It is NOT designed to lower the car to a specified landing such as Battery Lowering used for Hydraulic applications. An isolation transformer is required if the building voltage is NOT 480VAC. A single rescue unit is not capable of rescuing a group of cars --- this is a per car option. Maximum travel on rescue operation is 100 feet. Average time of operation for Rescue is 3 minutes. This feature is only available for jobs with 60HP and below. This battery automatic rescue operation is not allowed with the Green Drive.

I. Automatic Light and Fan shut down: The control system shall evaluate the system activity and automatically turn off the cab lighting and ventilation fan during periods of inactivity. The settings shall be field programmable.

J. Special Operation:
Limited Access Operation: A key switch shall be provided to initiate the Limited Access Operation. The activation of this operation shall restrict the operation of the elevator car calls to selected floors on a per-floor, per elevator basis. Travel to the restricted floors shall be allowed after the entry of the required access code via a card reader device supplied by others. The card reader entry shall override the car call restrictions and allow entry of a car call to a restricted floor.

K. Digital Services:

Cloud-based IoT Monitoring System (standard): Contractor shall provide a cloud-based IoT (internet of things) monitoring system capable of tracking door movements and timing, trips, power cycles, car calls, out-of-service events and modes. This observation will continue 24/7 and it shall be capable of providing service technicians a minimum of three recommended solutions for defined failure events and automatically dispatch service technicians in the event of failure(s) while sending notifications to end users of changes in their equipment's state via both email and mobile device. Access to IoT and related equipment data and status will be made available in both a web portal and mobile application secured by password and username with at least two-factor authentication. Finally, this system must be self-contained and not require internet provision by others.

Along with the monitoring system, options are available.

Remote Monitoring with Application Programming Interface (API) Integration: Contractor shall provide a portal and mobile device application (app) that communicates relevant service and operational information such as elevator operational status, open service call tickets, call ticket history and performance and service history. This system shall provide a REST application programming interface (API) capable of transmitting relevant information

from the cloud-based IoT monitoring system. This data includes equipment operational status, door movements, service and maintenance history, traffic statistics and failure alerts.

ADA Phone – Code Compliant Cellular Connectivity: Contractor shall provide a phone service through a self-contained cellular based VoIP system. This system shall meet code, include a backup battery capable of powering the emergency communication equipment for 4+ hours in the event of a power outage. The solution shall have remote monitoring capability to ensure continuous connectivity with a means of remote troubleshooting. Remote monitoring capability shall include, at a minimum, the ability to monitor connectivity and power supply. Remote monitoring shall be capable of providing local alerts to response personnel when on-site intervention is required.

Smart Device Elevator Calling with Occupant app API Integration: Contractor will provide an elevator calling application for smart devices (app) that can be accessed through Android and IOS smart device operating systems. This calling service shall be accomplished on both, Destination Dispatch and Traditional ETA elevator control system applications. Furthermore, a single, common and consistent app shall have the same user experience and user interface on both Destination Dispatch and Traditional ETA dispatching control systems. To enable mobile calling functionality without creating unnecessary wear on elevator components resulting from false calls, proximity detection beacons shall be installed in the elevator lobby at each floor. These beacons shall detect user smart devices and restrict calling of elevators when the user is not within a pre-configured range of elevator entrance. Beacon-based proximity detection distance must be configurable to accommodate various building and floor layouts. Once Bluetooth signal is detected, the user can place a floor call directly from their handheld or wearable device. The elevator calling app shall remove the need for interaction with hall fixtures, buttons or kiosks. This system shall be capable of placing an automatic call to a user-configured destination floor automatically based on both location in building (floor) and time of day. App users shall be able to configure their own source or starting floor, destination floor and schedule of automatic calling service, and be able to configure multiple automatic calling services and routines. System shall have reasonable ability to auto-provision users from access control system and not require duplicate entry of users for access control purposes. Finally, all services above shall be made available via an application programming interface (API) so that a 3rd party or tenant occupant app could be integrated with elevator smart device calling service so that users could receive multiple occupant experience-based services in a single, common, 3rd party mobile device application (app).

L. Digitally Native:

EOX has all the components needed for digital expansion from day one. No additional technician dispatching. On-site installation or modernization is required to enable new digital services giving you confidence that your elevator will remain up-to-date for years

to come. It is born digital, connected to TK Elevator's evolving ecosystem of digitally augmented services.

2.09 HALL STATIONS

A. Hall Stations, General: Buttons shall illuminate to indicate call has been registered at that floor for the indicated direction.

1. Provide one pushbutton riser with faceplates having a brushed stainless steel finish, surface-mounted in the entrance jamb.
    a. Phase 1 firefighter's service key switch, with instructions, shall be incorporated into the entrance frame at the designated level.

B. Floor Identification Pads: Provide door jamb pads at each floor. Jamb pads shall comply with Americans with Disabilities Act (ADA) requirements.

C. Combo Hall Lantern and Position Indicator: An electronic position indicator shall be provided and mounted for optimal viewing. As the car travels, its position in the hoistway shall be indicated by the illumination of the alphanumeric character corresponding to the landing which the elevator is stopped or passing. Hall lantern is combined in the display with the directional arrow to indicate the travel direction in the same faceplate. Faceplates shall match the hall stations.

D. Special Equipment: Not Applicable

2.10 CONTROLLER LOCATION

A. Door Jamb Mount is integrated with controller in the door jamb. Control power and cab light are provided by the elevator contractor and included with the integrated assembly. Main power disconnect is provided by the general contractor.

PART 3 EXECUTION

3.01 EXAMINATION

A. Before starting elevator installation, inspect hoistway, hoistway openings, pits and/or control room, as constructed, verify all critical dimensions, and examine supporting structures and all other conditions under which elevator work is to be installed. Do not proceed with elevator installation until unsatisfactory conditions have been corrected in a manner acceptable to the installer.

B. Installation constitutes acceptance of existing conditions and responsibility for satisfactory performance.

3.02 INSTALLATION

A. Install elevator systems components and coordinate installation of hoistway wall construction.

1. Work shall be performed by competent elevator installation personnel in accordance with ASME A17.1, manufacturer's installation instructions and approved shop drawings.
2. Comply with the National Electrical Code for electrical work required during installation.

B. Perform work with competent, skilled workmen under the direct control and supervision of the elevator manufacturer's experienced foreman.

C. Supply in ample time for installation by other trades, inserts, anchors, bearing plates, brackets, supports, and bracing including all setting templates and diagrams for placement.

D. Welded construction: Provide welded connections for installation of elevator work where bolted connections are not required for subsequent removal or for normal operation, adjustment, inspection, maintenance, and replacement of worn parts. Comply with AWS standards for workmanship and for qualification of welding operators.

E. Coordination: Coordinate elevator work with the work of other trades, for proper time and sequence to avoid construction delays. Use benchmarks, lines, and levels designated by the Contractor, to ensure dimensional coordination of the work.

F. Install machinery, guides, controls, car and all equipment and accessories to provide a quiet, smoothly operating installation, free from side sway, oscillation or vibration.

G. Alignment: Coordinate installation of hoistway entrances with installation of elevator guide rails for accurate alignment of entrances with cars. Where possible, delay final adjustment of sills and doors until car is operable in shaft. Reduce clearances to minimum safe, workable dimensions at each landing.

H. Erect hoistway sills, headers, and frames before erection of rough walls and doors; erect fascia and toe guards after rough walls finished. Set sill units accurately aligned and slightly above finish floor at landings.

I. Lubricate operating parts of system, including ropes, as recommended by the manufacturer.

3.03 FIELD QUALITY CONTROL

A. Acceptance testing: Upon completion of the elevator installation and before permitting use of elevator, perform acceptance tests as required and recommended by Code and

governing regulations or agencies. Perform other tests, if any, as required by governing regulations or agencies.

B. Advise Owner, Contractor, Architect, and governing authorities in advance of dates and times tests are to be performed on the elevator.

C. Elevator shall be inspected by a representative of the User Agency Insurance and Inspection company upon acceptance of the project. Contractor and Designer to notify FP&C when the elevators are ready for inspection and FP&C shall coordinate accordingly with the User Agency.

3.04 ADJUSTING

A. Make necessary adjustments of operating devices and equipment to ensure elevator operates smoothly and accurately.

3.05 CLEANING

A. Before final acceptance, remove protection from finished surfaces and clean and polish surfaces in accordance with manufacturer's recommendations for type of material and finish provided. Stainless steel shall be cleaned with soap and water and dried with a non-abrasive surface; it shall not be cleaned with bleach-based cleansers.

B. At completion of elevator work, remove tools, equipment, and surplus materials from site. Clean equipment rooms and hoistway. Remove trash and debris.

1. Use environmentally preferable and low VOC emitting cleaners for each application type. Cleaners that contain solvents, pine and/or citrus oils are not permitted.

3.06 PROTECTION

A. At time of Substantial Completion of elevator work, or portion thereof, provide suitable protective coverings, barriers, devices, signs, or other such methods or procedures to protect elevator work from damage or deterioration. Maintain protective measures throughout remainder of construction period.

3.07 DEMONSTRATION

A. Instruct Owner's personnel in proper use, operations, and daily maintenance of elevators. Review emergency provisions, including emergency access and procedures to be followed at time of failure in operation and other building emergencies. Train Owner's personnel in normal procedures to be followed in checking for sources of operational failures or malfunctions.

B. Make a final check of each elevator operation, with Owner's personnel present, immediately before date of substantial completion. Determine that control systems and operating devices are functioning properly.

3.08 ELEVATOR SCHEDULE

A. Elevator Qty. 2
1. Elevator Model: EOX
2. Elevator Type: Gearless Traction Machine Room-Less, Passenger
3. Rated Capacity: 3500 lbs.
4. Rated Speed: 150 ft./min.
5. Operation System: EOX controller
6. Travel: 32'-0"
7. Landings: 6 total
8. Openings:
   a. Front: 6
   b. Rear: 0
9. Clear Car Inside: 6'-9" wide x 5'-5" deep
10. Inside clear height: 7'-4" standard
11. Door clear height: 7'-0" standard
12. Hoistway Entrance Size: 3'-6" wide x 7'-0" high
13. Door Type: One-speed Center opening
14. Power Characteristics: volts, 3 Phase, 60 Hz.
    a. Note: Isolation Transformer required for jobs with less than 460vac as well as 575vac, 3 Phase building power.
15. Seismic Requirements: Yes
16. Hoistway Dimensions: 8'-6" wide x 6'-9" deep
    a. Note: Hoistway dimensions listed above are for Non-Seismic areas only. If you have chosen the option for seismic requirements, please consult your local TK Elevator Sales Representative for the proper hoistway dimensions.
17. Pit Depth: 5'-0"
18. Button & Fixture Style: EOX Signal Fixtures
19. Special Operations:
    Limited Access with card readers by others
20. Digital Services:
    Remote Monitoring with Application Programming Interface (API) Integration

    ADA Phone - Code Compliant Cellular Connectivity

    Smart Device Elevator Calling with occupant app API integration
21. Digitally Native

END OF SECTION 142123

SECTION 210000 - FIRE PROTECTION SYSTEM

PART 1 - GENERAL

1.1 WORK INCLUDED:

A. The General Conditions of the Contract and Supplementary Conditions of the Contract shall govern the work under this Section of the Specifications. The Contractor is specifically directed to refer to said conditions.

B. It is understood that these specifications, and the accompanying drawings, complement complete apparatus, fully erected and in successful operating condition. All work must be preformed in the best and most substantial manner.

C. These specifications are intended to provide complete, and in proper operation, all sprinkler system piping, equipment, heads, valves, controls, air compressor, and accessories, all as specified herein or shown on the accompanying drawings, or reasonably implied in either. The building shall be provided with complete coverage sprinkler system for the spaces designated on the drawings classification as required. System shall consist of a calculated dry system unless indicated otherwise. Verify all pertinent criteria. The systems shall conform to layout shown and meet all requirements of agencies listed under "REGULATIONS AND STANDARDS" below. Refer to plans and specifications for additional information.

D. Pipe, fittings, valves, and connections for fire protection and sprinkler systems shall be furnished by fire protection contractor.

1.2 RELATED WORK:

A. Section 211313 - Wet-pipe Sprinkler Systems.

1.3 SYSTEM LAYOUT:

A. Where plans indicate layout of system components, the layout shall be verified to comply with "REGULATIONS AND STANDARDS" and shall be revised if required to comply. The location of the sprinkler system piping and components shall be coordinated with all other trades. Revisions to sprinkler system layout shall be at Sprinkler Contractor's expense. Any such revisions shall be verified with the Architect.

1.4 ELECTRICAL WORK:

A. See "COORDINATION".

1.5 SPRINKLER SYSTEM CONTRACTOR:

A. It is intended that the work under this section is to be preformed by a qualified Fire

Protection Piping Systems Contractor regularly engaged in this type of work. The Contractor is to hold a current license to perform this work and be certified by the State Fire Marshall. All documents shall bear this certification.

1.6 REGULATIONS, STANDARDS AND REFERENCES:

A. It is the intention of these specifications and the accompanying drawings, that all elements and features of the fire protection system shall be in accordance with the standards of the National Fire Association (NFPA), the State Fire Marshall, all applicable building codes and Property Insurance Association of Louisiana whether so indicated or not. NFPA standards are on file in office of Engineer and may be examined at the Contractor's request.

B. ASME B16.1 - Cast Iron Pipe Flanges and Flanged Fittings, Class 150.

C. ANSI/ASME B16.3 - Malleable Iron Threaded Fittings, Class 150. Interior of building.

D. Specifications for Qualification of Welding Procedures and Welders for Piping and Tubing.

E. NFPA 13 - Installation of Sprinkler Systems.

F. NFPA 14 - Standpipe and Hose Systems.

1.7 QUALITY ASSURANCE:

A. Conform to NFPA 13 for sprinkler systems.

B. Conform to NFPA 14 for standpipe hose systems.

C. Welding Materials and Procedures: Conform to ASME Code.

D. Employ certified welders in accordance with ANSI/ASME Section 9. AWS D10.9.

E. Valves: Bear UL FM label or marking. Provide manufacturer's name and pressure rating marked on valve body.

1.8 SUBMITTALS:

A. Submit product data under provisions of section 013000 - Administrative Requirements

B. Indicate pipe materials used, jointing methods, supports, floor and wall penetration seals.

C. Indicate valve data and ratings.

1.9 DELIVERY, STORAGE, AND HANDLING:

A. Deliver and store valves in shipping containers, with labeling in place, under provisions of Section 016000 – Product Requirements.

B. Provide temporary protective coating on cast iron and steel valves.

C. Provide temporary end caps and closures. Maintain in place until installation.

1.10 AREAS SUBJECT TO FREEZING:

A. For areas requiring protection and not receiving direct heating during times of potential freezing, such as building overhangs, porches, canopies, attics, etc. provide a compressed air dry pipe system for these areas only, see drawings for locations. Coordinate electrical requirements with contractor.

1.11 MANUFACTURER'S OR TRADE NAMES:

A. Where the plans or specifications mention the names of manufacturers or the products of specific manufacturers, it is intended that the Contractor shall furnish the item or items as specifies. Products of manufacturers that are not mentioned shall be subject to prior review by the Engineer and shall in any case mentioned shall be subject to prior review by the Engineer and shall in any case be in accordance with regulations and standards as state above.

1.12 SHOP DRAWINGS AND SUBMITTAL DATA:

A. Within fifteen (15) days of award of the contract, the contractor shall submit six (6) copies of system piping shop drawings and six (6) copies of manufacturer's data and descriptive literature and drawings for all equipment and materials. Additionally, provide a reproducible (sepia) copy of the system piping shop drawings. All drawings, literature and data on all equipment shall be submitted at the same time; this material shall contain complete layout, capacity data, dimensions and other pertinent information necessary for the Architect to properly review and evaluate the item that necessary to meet the requirements for submittal to the State Fire Marshall.

B. The contractor shall obtain approval of agencies listed under "REGULATIONS AND STANDARDS" before submitting to the Engineer, except that the date for State Fire Marshall's review shall be submitted to the Engineer prior submitting to the Fire Marshall. All required review fees and applicable requirements shall be by the contractor. No item of equipment or material shall be place on order until Final Review comments have been received from the Architect. See "DRAWINGS" below.

1.13 ORDINANCES, RULES AND REGULATIONS:

A. All material and construction shall conform to the requirements of all building, plumbing and sanitary codes and laws in force in the locality in which the work is to be done. All materials and construction shall also conform to the rules and regulations listed above under "REGULATIONS AND STANDARDS".

1.14 DRAWINGS:

A. The contractor shall submit detailed drawings for all sprinkler system showing exact locations and sizes of all elements in the system before fabrication is begun. Engineer shall have the prerogative of changing the position or configuration of these systems without changing the total scope of work involved to comply with "REGULATIONS AND STANDARDS".

1.15 GUARANTEE:

A. The contractor shall guarantee all materials and workmanship under this contract for a period of one (1) year from date of final acceptance of his work and shall repair or replace any such defective materials and workmanship without cost to the Owner.

B. The guarantee shall include complete service, including adjustment service and inspection, during the guarantee period as required by agencies listed under "REGULATIONS AND STANDARDS".

1.16 APPROVAL OF PRODUCT PRIOR TO BIDDING

A. Refer to Instructions to Bidders

PART 2 - PRODUCTS

2.1 PIPE AND TUBE:

A. See Section – 211313 Wet-pipe Sprinkler System

B. Underground pipe shall be C900 to within 5' of building.

2.2 PIPE FITTINGS:

A. Steel Fittings: ANSI/ASME B16.9, wrought steel, butt welded. ANSI/ASME B16.25, buttweld ends. ASTM A234, wrought carbon steel and alloy steel. ANSI/ASME B16.5, steel flanges and fittings. ANSI/ASME B16.11, forges steel socket welded and threaded.

B. Cast Iron Fittings: ANSI/ASME B16.1, flanges and fittings. B16.4, screwed fittings.

C. Malleable Iron Fittings: ANSI/ASME B16.3, screwed type. ANSI/ASTM A47.

2.3 JOINT MATERIALS:

A. Solder: ANSI/ASTM B32, 95/5 alloy.

B. Brazing: ANSI/AWS A5.8.

C. Threaded Joint Compound.

2.4 UNIONS, FLANGES, AND COUPLINGS:

A. Unions: 150 psi malleable iron for threaded ferrous piping.

B. Flanges: 150 psi forges steel slip-on flanges for ferrous piping.

2.5 ACCEPTABLE MANUFACTURER - GATE VALVES:

A. Nibco 637-31

B. Central 722 U Series

C. Substitutions: Under provisions of Instructions To Bidders.

2.6 GATE VALVES:

A. Bronze, rising stem, inside screw, solid wedge.

2.7 ACCEPTABLE MANUFACTURERS - GLOBE OR ANGLE VALVES:

A. Nibco GS-132-U

B. Crane 143

C. Substitutions: Under provisions of Instructions To Bidders.

2.8 GLOBE OR ANGLE VALVES:

A. Bronze, rising stem, inside screw, renewable composition disc.

2.9 ACCEPTABLE MANUFACTURERS - CHECK VALVES:

A. NIBCO CS-172

B. Crane 147

C. Substitutions: Under provisions of Instructions To Bidders.

2.10 CHECK VALVES:

A. Iron body, bronze trim, swing disc, renewable disc and seat.

2.11 ACCEPTABLE MANUFACTURERS - BUTTERFLY VALVES:

A. Nibco LD 3510-2 Series

B. Central Fig. 570 or 580

C. Substitutions: Under provisions of Instructions To Bidders.

2.12 BUTTERFLY VALVES:

A. Iron body, bronze stainless steel disc and stem extended for insulated work, resilient replaceable liner seat.

2.13 ACCEPTABLE MANUFACTURERS - DRAIN VALVES:

A. Nibco F-667-0 Series

B. Central 722 U Series

C. Substitutions: Under provisions of Instructions To Bidders.

2.14 DRAIN VALVES:

A. Brass ball valve with cap and chain, 3/4 inch (19 mm) hose thread.

2.15 VALVE OPERATORS:

A. Provide handwheels for gate, globe or angle, and drain valves.

B. For butterfly valves provide gear operators for sizes 8 inches and larger. For smaller sizes provide level lock handle with toothed plate.

2.16 VALVE CONNECTIONS:

A. Provide valve connections to match pipe joints. Use valves of pipe size.

B. For copper tube, provide threaded solder adapters for connection to valve.

C. Provide butterfly valve with tapped lug body when used for isolating service.

2.17 SIAMESE FIRE DEPARTMENT CONNECTIONS:

A. Provide two-way standard siamese fire department connection with chrome plated finish, local fire department threads, dust caps and chains, 3/4" automatic drip, marked "SPRINKLER - FIRE DEPARTMENT CONNECTION:.

2.18 ACCEPTABLE MANUFACTURERS - SPRINKLER HEADS:

A. Reliable Automatic Sprinkler

B. Viking Corp.

C. Tyco-Fire

D. Substitutions: Under provisions of Instruction To Bidders.

PART 3 - INSTALLATION

3.1 GENERAL:

A. Furnish and install in a neat workmanlike manner, all piping shown on drawings or that is specified or required to provide a complete, properly operating installation. All piping and accessories shall conform to standards as applicable.

B. Run piping parallel with the lines of the building, unless specifically shown or noted otherwise. All pipe, fittings, valves, etc., shall have sufficient clearance from other work to finish at least 1/2 inch from other work or finished covering of other piping.

C. Provide all necessary hangers, anchors, thrust blocks, etc., to properly support and protect piping system, as required by agencies listed under "REGULATIONS AND STANDARDS".

D. Under no circumstances is the contractor to attach to or support from any bar joist bridging. Any supports to the bar joists or any structural systems are to be approved by the Architect/Engineer. All supplement angle or channel iron required to support equipment of this Specification is to be furnished by the contractor and is to be independent of any other supports.

3.2 DESIGN:

A. The sprinkler systems shall be designed as required for occupancies specified by experienced personnel have competency in the execution of such work. Sprinkler system design shall be performed only by licensed sprinkler contractors.

B. Sprinkler piping shall be protected from freezing during the lay-a-way period.

C. NFPA rules and regulations governing the design shall be scrupulously adhered to.

D. Piping shall be installed in accordance with NFPA 13.

3.3 EXECUTION:

A. Run piping concealed above furred ceiling and in joists to minimize obstructions. Expose only heads.

B. Coordinate sprinkler piping routing and heads with all trades.

C. Protect sprinkler heads against mechanical injury.

D. Include all costs of shop drawings review and approval from authorities in price.

E. Locate outside alarm on wall of building adjacent to Siamese department connections.

F. Provide cabinet containing required number of spare heads as per NFPA 13, of each type, along with wrench suitable for each type of head.

G. Provide flow switch on leaving side of main valve and monitoring switch on main valve. Flow switch shall sense flow and sound appropriate zone of fire alarm system monitoring switch on each main valve; when valve is started to its "closed" position shall indicate trouble on appropriate zone of fire alarm system and sound local audible alarm. Wiring between flow switches and monitoring switches and fire alarm system shall be provided under the Electrical Division.

H. Furnish and install sprinkler zone valves and flow switches where indicated on the drawings for the zoning of the system. Each of these devices shall be connected into the fire alarm system as indicated for the main valve, including local alarming.

I. Provide all test and drain valves as required per NFPA 13.

J. Support sprinkler piping in accordance with NFPA 13.

K. Provide new water service as shown on the drawings.

L. Install air compressor on vibration isolators, as required.

M. Screw joint steel piping up to and including 1-1/2 inch diameter. Screw or Roll Goove 2 inch diameter and larger. PER NFPA 13.

N. Die cut screw joints with full cut standard taper pipe threads with red lead and linseed oil or other non-toxic joint compound applied to male threads only.

O. Coat threaded ends with pipe lubricant compound.

P. Steel piping, main sized saddle branch connections or direct connection of branch lines to mains is permitted if main is one pipe size larger than the branch for up to 6 inch mains and if main is two pipe sizes larger than branch for 8 inch and larger mains.

Q. Solder Braze copper tubes.

R. Install piping in accordance with NFPA 13 for sprinkler systems and NFPA 14 for standpipe and hose systems.

S. Do not penetrate building structural members unless indicated.

T. Provide sleeves when penetrating footings floors and walls.

U. Seal pipe and sleeve penetration to achieve fire resistance equivalent to fire separation required.

3.4 INSTALLATION - VALVES:

A. Install valves with stems upright or horizontal, not inverted.

B. Provide gate valves for shut-off or isolating service.

C. Where approved, butterfly valves may be used instead of gate valves.

D. Provide drain valves at main shut-off valves, low points of piping and apparatus.

3.5 SLEEVES AND PLATES:

A. Wherever pipes pass through concrete slabs, furnish and install sleeves, properly located for the work.

B. Use sleeves of sufficient size to allow the specified pipe covering to pass through the sleeves and finish sleeves flush with walls and ceiling.

C. Sleeves shall be galvanized steel not lighter than 24 gauge.

D. Seal spaces between sleeve and pipe. Use packing device or material for UL rating to match rating of wall or floor/ceiling as rated under UL File R9658.

3.6 ESCUTCHEONS:

A. Where pipes passing through floors, walls or ceiling exposed to view in finished areas, provide pressed steel split plates which cover the opening and fit snugly to pipe.

3.7 COORDINATION:

A. All interlock and signal wiring runs to the annunciator panel will be furnished and installed and as part of the Electrical Work.

B. This contractor shall provide for all switches and interlocking devices on all valves as required.

3.8 UNDERGROUND PIPING:

A. Underground fire protection system piping shall be installed in accordance with the requirements of NFPA 24, Private Fire Service Mains and Their Appurtenances. Provide concrete thrust blocking at each change of direction of the piping and at all tees, plugs, and caps in accordance with NFPA 24. Where thrust blocking is impractical, fittings with a mechanical joint retainer gland, approved for the piping material utilized, may be used in lieu of thrust blocking.

END OF SECTION 210000

SECTION 211313 - WET-PIPE SPRINKLER SYSTEMS

PART 1 - GENERAL

1.1 WORK INCLUDED

A. Installation of new sprinkler and related piping systems in new construction.

1.2 WORK INSTALLED BUT SPECIFIED UNDER OTHER SECTIONS

A. Section Fire Protection Piping: Piping and valves.

1.3 WORK FURNISHED BUT INSTALLED UNDER OTHER SECTIONS

A. Furnish sleeves to General Contractor.

1.4 RELATED WORK

A. Section 230529 - Supports and Anchors.

1.5 REFERENCES:

A. NEMA 250 - Enclosures for Electrical Equipment (1000 Volt maximum).

B. NFPA 13 - Installation of Sprinkler Systems.

1.6 SYSTEM DESCRIPTION:

A. System to provide coverage for entire new building area.

B. Interface system with building control system. Building fire and smoke alarm system.

C. Provide system per NFPA 13 hazard requirement.

1.7 QUALITY ASSURANCE:

A. Design and installation to conform to NFPA 13.

B. Equipment and components: Bear UL FM label or marking.

C. Specialist Firm: Company specializing and licensed in sprinkler systems.

1.8 REGULATORY REQUIREMENTS:

A. Hydraulic Calculations, Product Data, Shop Drawings: Bear stamp of approval of Fire Marshal.

B. Indicate hydraulic calculations, detailed pipe layout, hangers and supports, components and accessories.

C. Submit shop drawings product data hydraulic calculations to Fire Marshal. Submit proof of approval to Architect. Include check for review fee with submittal to Fire Marshal's office.

1.9 PROJECT RECORD DOCUMENTS:

A. Submit documents under provisions of Section 017839.

1.10 OPERATION AND MAINTENANCE DATA:

A. Submit manufacturer's operation and maintenance data under provisions of Section 017823.

B. Include written maintenance data on components of system, servicing requirements, and record drawings.

C. Include maintenance, inspection data, replacement part numbers and availability, and location and numbers of service depot.

1.11 DELIVERY, STORAGE, AND HANDLING:

A. Deliver and store materials in shipping containers with labeling place under provisions of Section 016000.

B. Provide suitable wrenches for each head type.

C. Maintain caps in place until installation.

1.12 EXTRA STOCK:

A. Provide extra sprinkler heads under provisions of NFPA 13.

B. Provide suitable wrenches for each head type.

C. Provide storage cabinet, size and type as per NFPA-13

PART 2 - PRODUCTS

2.1 PIPING MATERIALS:

A. Above Ground Inside Building Piping: Pipe diameter smaller than and up to 2" shall be Steel Schedule 40 pipe, Pipe diameters 2-1/2" and larger shall be Steel Schedule 10 or Steel Schedule 40 pipe, As permitted by NFPA 13.

2.2 ACCEPTABLE MANUFACTURERS - SPRINKLER HEADS:

A. Reliable Automatic Sprinkler

B. Viking Corp.

C. Tyco-Fire

D. Substitutions: Under provisions of Instruction To Bidders.

2.3 SPRINKLER HEADS:

A. Exposed Area Type: Standard upright type with brass finish.

B. Sidewall Type: Brass Chrome plated finish with matching escutcheon.

C. Fusible Link: Temperature rated for specific area hazard.

D. Guards: finish to match sprinkler head.

E. Finished ceilings: Pendent sprinklers - concealed type with white cover plates. Unless otherwise noted on plans.

PART 3 - EXECUTION

3.1 PREPARATION:

A. Place pipe runs to minimize obstruction to other work.

3.2 INSTALLATION:

A. Run piping concealed above furred ceiling and in joists to minimize obstructions. Expose only heads.

B. Coordinate sprinkler piping routing and heads with all trades.

C. Protect sprinkler heads against mechanical injury.

D. Include all costs of shop drawings review and approval from authorities in price.

E. Locate outside alarm on wall of building adjacent to siamese fire department connections.

F. Provide cabinet containing required number of spare heads as per NFPA 13, of each type, along with wrench suitable for each type of head.

G. Provide flow switch on leaving side of main valve and monitoring switch on main valve. Flow switch shall sense flow and sound appropriate zone of fire alarm system monitoring switch on each main valve; when valve is started to its "closed" position shall indicate trouble on appropriate zone of fire alarm system and sound local audible alarm. Wiring between flow switches and monitoring switches and fire alarm system shall be provided under electrical division.

H. Furnish and install sprinkler zone valves and flow switches where indicated on the drawings for the zoning of the system. Each of these devices shall be connected into the fire alarm system as indicated for the main valve, including local alarming.

I. Provide all test and drain valves as required for system per NFPA 13.

J. Support sprinkler piping in accordance with NFPA 13.

K. Provide new water service as shown on the drawings.

3.3 CLEANING:

A. Flush entire piping system of foreign matter.

3.4 SYSTEM TESTS:

A. Hydrostatically test entire system.

B. Test shall be witnessed by Fire Marshal and Architect.

END OF SECTION 211313

SECTION 221000 - PLUMBING PIPING

PART 1 - GENERAL

1.1 WORK INCLUDED

A. Pipe and Pipe Fittings

B. Valves

C. Sanitary Sewer Piping System

D. Domestic Water Piping system

E. Service Connections

F. Natural Gas Piping System

1.2 RELATED WORK

A. Section 230000 - General Provisions

B. Section 230516 - Expansion Compensation

C. Section 230523 - Supports and Anchors

D. Section 230700 - Piping Insulation

E. Section 221010 - Plumbing Specialties

F. Section 224000 - Plumbing Fixtures and Trim

1.3 REFERENCES:

A. ANSI/ASME B16.3 - Malleable Iron Threaded Fittings Class 150 NS 300.

B. ANSI/ASME B16.23 - Cast Copper Alloy Solder Joint Drainage Fittings - DWV.

C. ANSI/ASME B16.29 - Wrought Copper and Wrought Copper Alloy Solder Joint Drainage Fittings - DWV.

D. ANSI/ASME Sec. 9 - Welding and Brazing Qualifications.

E. ANSI/ASTM B32 - Solder Metal.

F. ANSI/ASTM C443 - Joints for Circular Concrete Sewer and Culvert Pipe, Using Rubber Gaskets.

G. ASTM A53 - Pipe, Steel, Black and Hot-Dipped Zinc Coated, Welded and Seamless.

H. ASTM A74 - Cast Iron Soil Pipe and Fittings.

I. ASTM A234 - Pipe Fittings of Wrought Carbon Steel and Alloy Steel for Moderate and Elevated Temperatures.

J. ASTM B88 - Seamless Copper Water Tube.

K. ASTM B306 - Copper Drainage Tube (DWV).

L. ASTM C564 - Rubber Gaskets for Cast Iron Soil Pipe and Fittings.

M. AWS A5.8 - Brazing Filler Metal.

N. AWWA C601 - Standard Methods for the Examination of Water and Waste Water.

O. CISPI 301 - Cast Iron Soil Pipe and Fittings for Hubless Cast Iron Sanitary System.

P. CISPI 310 – Standard for cast iron couplings

Q. LSPC – The latest addition of the Louisiana State Plumbing Code.

1.4 QUALITY ASSURANCE:

A. Valves: Manufacturer's name and pressure rating market on valve body.

B. Welding Materials and Procedures: Conform to ASME Code and applicable state labor regulations.

C. Welders Certification: In accordance with ANSI/ASME Sec. 9. ANSI/AWS D 1.1.

D. Cast iron pipe and fittings shall be marked with CISPI's collective trademark.

1.5 SUBMITTALS:

A. Submit shop drawings and product data under provisions of Section 013000.

B. Include data on pipe material, pipe fittings, valves and accessories.

1.6 WATER PIPE AND FITTING MATERIALS STANDARD

A. Plastic Water Pipe and Fittings

1. ABS and PVC Plastic Tubular Fittings: ASTM F 409, ANSI/NSF 24, ANSI/NSF 14
2. Joints for IPS PVC pipe using solvent cement: ASTM D 2672
3. Chlorinated poly (vinyl chloride) (CPVC) plastic pipe, Schedule 80, 2" and under: ASTM F 441, listed
4. Chlorinated poly (vinyl chloride) (CPVC) plastic pipe (SDR-PR): ASTM F 442

5. CPVC Pipe and fittings: ASTM D 2846, Listed
6. Cross-linked Polyethylene/Aluminum/Cross-linked Polyethylene (PEX-AL-PEX) pressure pipe and fittings: ASTM F 1281
7. Cross-linked Polyethylene (PEX) plastic hot and cold water distribution system: ASTM F 877, Listed
8. Cross-linked Polyethylene (PEX) tubing: ASTM F 876
9. Cross-linked Polyethylene (PEX) tubing systems for pressure: CAN/CSA-B137.5M89, listed
10. Flexible Elastomeric pressure joints: ASTM D 3139, See 308.8
11. Metal insert fittings for PB tubing: ASTM F 1380
12. Polyethylene/Aluminum/Polyethylene (PE-AL-PE) pressure pipe and fittings: ASTM F 1282
13. Polyethylene pipe and tubing (PE) Number 2305, 2306, 3306, 3406, 3408: ASTM D 2104, ASTM D 2239, ASTM D 2737, Listed, See 303.8.2
14. Poly (vinyl chloride) (PVC) plastic pipe fittings, Schedule 40: ASTM D 2466
15. Pressure rated ABS-fittings: ASTM D 2468, Listed
16. Pressure rated ABS-pipe Number 1210, 2112, 1316: ASTM D 1527, ASTM D 2282, Listed, See 303.8.2
17. PVC injection molded gasketed fittings for pressure applications: CAN/CSA-B137.2-M89, Listed
18. PVC Pipe, Number 1120, 1220: ASTM D 1785, ASTM D 2241, listed, See 303.8.2
19. PVC socket-type fittings, Schedule 80: ASTM D 2467, listed
20. Socket-type chlorinated poly (vinyl chloride) (CPVC) plastic pipe fittings, Schedule 80, 2" and under: ASTM F 439, listed
21. Threaded chlorinated poly (vinyl chloride) (CPVC) plastic pipe fittings, Schedule 80, 2" and under: ASTM F 437, listed

B. Ferrous Water Pipe and Fittings

1. Cast Iron fittings (threaded): ASTM A 126
2. Cast iron pipe (threaded): ANSI A40.5
3. Cast iron water pipe: ASTM A377
4. Ductile-iron water pipe: ANSI/AWWA C 151/A 21.51
5. Ductile-iron water fittings: ANSI/AWWA C 110/A 21.10
6. Malleable iron fittings (threaded): ASTM A 197
7. Nipples pipe (threaded): FS WW-N-351a
8. Stainless steel water pipe Grade H: ASTM A 268, See 303.8.4
9. Steel couplings, threaded, black and galvanized: ASTM A 865
10. Steel pipe black and galvanized: ASTM A 53
11. Welded and seamless steel pipe: ASTM A 53

C. NonFerrous Pipe and Fittings

1. Cast bronze fittings for flared copper tube: ANSI B16.26
2. Cast bronze threaded fittings: ASME B16.15
3. Cast bronze solder-joint pressure fittings: ANSI B16.18
4. Cast copper alloy fittings for flared copper tubes: ASME B 16.26
5. Pipe flanges and flanged fittings: ANSI B16.5
6. Seamless brass tube: ASTM B 135
7. Seamless copper pipe: ASTM B 42
8. Seamless copper tube: ASTM B 75

9. Seamless copper water tube types K, L, & M: ASTM B 88
10. Seamless red brass pipe: ASTM B 43
11. Seamless and welded copper distribution tube (type D): ASTM B 641
12. Threadless copper pipe (TP): ASTM B 302
13. Welded brass tube: ASTM B 587
14. Welded copper tube: ASTM B 447
15. Welded copper alloy UNS # C21000 water tube: ASTM B 642
16. Wrought copper and copper-alloy solder-joint pressure fittings: ASME B 16.22 for copper water tube
17. Wrought seamless copper and rectangular copper-alloy pipe and tube: ASTM B 251, square and tubing not applicable
18. Valves-flanged threaded, and welding end: ANSI B 16.34

D. Backflow Prevention Devices Materials Standard

1. Air gap standards: ASME A112.1.2
2. Backflow preventers, double check valve assembly: ASSE 1015, ANSI/AWWA C510
3. Backflow preventers with intermediate atmospheric vent: ANSI/ASSE 1012
4. Backflow preventers, double check detector assembly: ANSI/ASSE 1048
5. Backflow preventers, hose connection: ANSI/ASSE 1052
6. Backflow preventers, reduced pressure detector assembly: ANSI/ASSE 1047
7. Backflow preventers, reduced pressure principle assembly: ANSI/AWWA C511, ASSE 1013
8. Dual check valve type backflow preventer: ASSE 1032, for carbonated beverage dispensers-post mix type
9. Field test procedures for backflow preventer assemblies: ASSE 5010
10. Manual for the selection, installation, maintenance, and field testing of backflow prevention devices: CAN/CSA B64.10
11. Vacuum breakers, Anti-Siphon, pressure type assembly (outdoor use): ASSE 1020
12. Vacuum breakers-atmospheric pipe applied: ANSI/ASSE 1001
13. Vacuum breakers, back siphonage, pressure type assembly (spill resistant): ANSI/ASSE 1056
14. Vacuum breakers, hose connections: ANSI/ASSE 1011
15. Vacuum breakers, laboratory faucet: ANSI/ASSE 1035
16. Vacuum breaker wall hydrants, fronts resistant automatic draining: ASSE 1019
17. Water closet flush tank fill valves (ballcocks): ASSE 1002

E. Valves Material Standards

1. Valves, bronze gate: MSS SP-80
2. Valves, cast iron gate: ASTM A 126
3. Valves, ball: MSS SP-72, MSS SP-110
4. Valves, resilient-seated gate: ANSI/AWWA C509

F. Temperature Control Device Standards

1. Individual shower control valves, anti-scald: ASSE 1016
2. Temperature actuated mixing valves for primary domestic use: ASSE 1017
3. Water supply valves, mixing valves and single control mixing valves: ASSE 1029

G. Potable Water Piping

1. All potable water pipes, pipe related products, and materials that join of seal pipes conform to ANSI/NSF 61.

1.7 DRAINAGE SYSTEM MATERIALS STANDARDS

A. NonMetallic Piping

1. Concrete drain tile: ASTM C 412
2. Concrete perforated: ASTM C 444
3. Concrete reinforced culverts: ASTM C 76, for storm drains only
4. Concrete reinforced sewer pipe: ASTM C 361, for storm drains only
5. Concrete sewer pipe: ASTM C 14, for storm drains only
6. Sewer manholes: ASTM C 478
7. Concrete (steel cylinder type): FS SS-P-381

B. Plastic Pipe and Fittings

1. Coextruded composite pipe: ASTM F 1488, See 303.8.3, 303.8.5, 704.1, 1101.5, 1103.2, 1103.4
2. Coextruded composite drain, waste, and vent pipe (DWV): ASTM F 1499, See 303.8.3, 303.8.5, 704.1, 1101.5, 1103.2, 1103.4
3. Coextruded PVC plastic pipe: ASTM F 891, See 303.8.3, 303.8.5, 704.1, 1101.5, 1103.2, 1103.4
4. Flexible elastomeric non-pressure joints: ASTM D 3212, See 303.8
5. Large diameter ribbed PVC sewer pipe and fittings: CAN/CSA-B182.4
6. Polyolefin laboratory drainage systems: CAN/CSA-B181.3
7. PVC-DWV pipe and fittings: ASTM D 2665, listed, See 303.8.3
8. Type PS 46 and type PS 115 sewer pipe (for outside building sewers, storm drains): ASTM F 789, See 704.1, 1101.4, 1103.2, 1103.4, ASTM D 2321, installation
9. Type PSM PVC sewer pipe and fittings (for outside building sewers, storm drains, and storm sewers): ASTM 3034, See 704.1, 1101.5, 1103.2, 1103.4, ASTM D 2321, installation
10. Type PSP PVC sewer pipe and fittings (for outside building sewers, storm drains, and storm sewers): ASTM D 2321, Installation
11. All plastic piping pipes, plastic plumbing piping components and related materials shall be listed as conforming with ANSI/NSF Standard 14.

C. Ferrous Pipe and Fittings

1. Cast iron soil pipe and fittings: ASTM A 74, CISPI HS
2. CI NO-HUB pipe and fittings: ASTM A 888, CISPI Std. 301
3. Ductile-iron gravity sewer pipe: ASTM A 746
4. Hubless cast iron sanitary system: CISPI Std. 310
5. Manhole top frames and covers: ASTM A 48

D. NonFerrous Pipe and Fittings

1. Cast copper alloy solder-joint drainage fittings: ASME B 16.23, for plumbing drainage waste and vents
2. Cast copper alloy solder-joint fittings for solvent drainage systems: ANSI B 16.32
3. Copper drainage tube DWV: ASTM B 306
4. Welded copper and copper alloy heat exchanger tube: ASTM B 543

5. Wrought copper and wrought copper alloy solder-joint drainage fittings for plumbing drainage waste and vents: ASME B 16.29
6. Wrought copper and wrought copper alloy solder-joint fittings for solvent drainage systems: ANSI B 16.43

E. Glass pipe

1. Borosilicate glass pipe and fittings for DWV applications: ASTM C 1053

PART 2 - PRODUCTS

2.1 SANITARY SEWER PIPING AND STORM SEWER - BURIED BEYOND 5 FEET OF BUILDING:

A. Schedule 40 PVC/DWV
Fittings: Same as piping
Joints: Solvent welded

2.2 SANITARY SEWER AND STORM SEWER PIPING - BURIED WITHIN 5 FEET OF BUILDING:

A. Schedule 40 PVC/DWV
Fittings: Same as piping
Joints: Solvent welded

2.3 SANITARY SEWER AND STORM SEWER PIPING, ABOVE GRADE:

A. Cast Iron Pipe: ASTM A74, service weight.
Fittings: Cast Iron.
Joints: Hub-and-spigot, CISPI HSN compression type with ASTM C564 neoprene gaskets or lead and oakum.

B. Cast Iron Pipe: CISPI 301, hubless, service weight.
Fittings: Cast Iron.
Joints: CISPI 310 neoprene gaskets and stainless steel clamp-and-shield assemblies.

2.4 WATER PIPING, ABOVE GRADE: Exterior water piping buried beyond 5' of building to be same as above grade.

A. Copper Tubing: ASTM B88, Type L, hard drawn.
Fittings: ANSI/ASME B16.18, cast bronze solder-joint pressure fittings, or ANSI/ASME B16.22, wrought copper.

B. All potable water pipes, pipe related products and materials that join or seal pipes and pipe related products shall be evaluated and listed as conforming with a national consensus product or material standard and ANSI/NSF Standard 61.

2.5 WATER PIPING, TRAP PRIMERS: Piping for trap primer piping below slab only.

A. Soft Copper Tube: ASTM B 88, Types K and L, water tube, annealed temper.

2.6 NATURAL GAS PIPING, BURIED BEYOND 5 FEET OF BUILDING:

A. Polyethylene Pipe: ASTM D2513, SDR 11.5.
Fittings: ASTM D2683 to ASTM D2513, socket type.
Joints: Fusion welded.

2.7 NATURAL GAS PIPING, ABOVE GRADE:

A. Steel Pipe: ASTM A53 or A120, Schedule 40, black.
Fittings: ANSI/ASME B16.3, malleable iron, or ASTM A234, forged steel welding type.
Joints: Screwed for pipe two (2) inches and under; ANSI/AWS D1.1 welded, for pipe over two (2) inches. All gas piping run in a concealed space shall be welded.

2.8 FLANGES, UNION, AND COUPLINGS:

A. Pipe Size two (2) Inches and Under: 150 psig malleable iron unions for threaded ferrous piping; bronze unions for copper pipe, solder joints.

B. Pipe Size Over two (2) Inches: 150 psig forged steel slip-on flanges for ferrous piping; bronze flanges for copper piping; neoprene gaskets for gas service.

C. Dielectric Connections: Unions with galvanized or plated steel threaded end, copper solder end, water impervious isolation barrier.

2.9 GATE VALVES

A. Up to two (2) Inches: Bronze body, non-rising or rising stem and handwheel, inside screw, single double wedge or disc, solder or threaded ends. Nibco Model 113 Series, Crane Model 438 Series, Powell Model 2700, Hammond 2B 617 or approved equal.

B. Over two (2) Inches: Iron body, bronze trim, non-rising or rising stem and handwheel, OS&Y, single wedge, flanged ends. Red and White 415/421, NIBCO F619/F617, Crane 461/465 1/2 or approved equal.

2.10 GLOBE VALVES:

A. Up to 2 Inches: Bronze body, rising stem and handwheel inside screw, renewable composition disc, solder screwed ends, with backseating capacity. Nibco Model 211 Series, Crane Model 1 Series, Powell Model 150, Hammond 1.413, Red White 211/212 or approved equal.

B. Over 2 Inches: Iron body, bronze trim, rising stem and handwheel, OS&Y, plug-type disc, flanged ends. Red and White Fig 400 or NIBCO F718-B, Crane 351 or approved equal.

2.11 BALL VALVES:

A. Up to 2 Inches: Bronze or stainless steel body, stainless steel ball, teflon seats and stuffing box ring, lever handle and balancing stops, solder threaded ends with union. Nibco Model 580 Series, Crane Model 2330 Series, Red White 5092/5095 or approved equal.

B. Over 2 inches: Cast steel body, chrome plated steel ball teflon seat and stuffing box seals, lever handle or gear drive handwheel for sizes 10 inches and over, flanged.

2.12 BUTTERFLY VALVES:

A. Iron body, bronze disc, resilient replaceable seat for service to 180-degrees F, or lug end butterfly, 10 position over handle or infinite position lever handle with memory stop.

2.13 SWING CHECK VALVES:

A. Up to 2 inches: Bronze 45 degree swing disc, solder or screwed ends. Nibco Model 413 Series, Crane Model 37 Series, Red White 236/237 or approved equal.

B. Over 2 inches: Iron body, bronze trim, 45 degrees swing disc, renewable disc and seat, flanged ends. Red White 435, Nibco F918, Crane 373 or approved equal.

2.14 SPRING LOADED CHECK VALVES:

A. Iron body, bronze trim, spring loaded, bronze disc, wafer.

B. Red White 442, Nibco W920W, Stockham W6-970 or approved equal.

PART 3 - EXECUTION

3.1 PREPARATION:

A. Ream pipe and tube ends. Remove burrs. Bevel end Ferrous pipe.

B. Remove scale and dirt, on inside and outside, before assembly.

C. Prepare piping connections to equipment with flanges or unions.

3.2 INSTALLATIONS:

A. Provide non-conducting dielectric connections wherever jointing dissimilar metals.

B. Route piping in orderly manner and maintain gradient.

C. Install piping to conserve building space and not interfere with use of space.

D. Group piping whenever practical at common elevations.

E. Install piping to allow for expansion and contraction without stressing pipe, joints, or connected equipment.

F. Provide clearance for installation of insulation and access to valves and fittings.

G. Provide access where valves and fittings are not exposed.

H. Slope water piping and arrange to drain at low points.

I. Establish elevations of buried piping outside the building to insure not less than 3 feet of cover.

J. Where pipe support members are welded to structural building framing, scrape, brush clean, and apply one coat of zinc rich primer to welding.

K. Prepare pipe, fittings, supports, and accessories not prefinished, ready for finish painting.

L. Establish invert elevations, slope all drainage piping 4 inches and larger to 1/8 inch per foot minimum. All drainage piping 3 inches and smaller shall be sloped to 1/4 inch per foot minimum.

M. Install bell and spigot pipe with bell end upstream.

N. Install valves with stems upright or horizontal, not inverted.

O. Provide one plug cock wrench for every ten plug cocks sized 2 inches and smaller, minimum of one. Provide one plug cock wrench for each plug cock sized 2-1/2 inches and larger.

P. In pipe 3 – inch nominal diameter of less, cleanouts shall be located at not more than 50ft.intervals

Q. In pipe 4 – inches nominal diameter through 6 inches nominal diameter, cleanouts shall be located at not more than 80ft. intervals

R. Each building drain shall be provided with a cleanout within 6ft. of the junction of the building drain and building sewer.

3.3 APPLICATION:

A. Grooved mechanical couplings and fasteners not allowed.

B. Install unions downstream of valves and at equipment or apparatus connections.

C. Install brass male adapters each side of valves in copper piped system. Sweat solder adapters to pipe. All joints in potable lines to be lead free.

D. Install gate, ball, butterfly valves for shut-off and to isolate equipment, part of systems, or vertical risers.

E. Install globe, ball, butterfly valves for throttling, bypass, or manual flow control services.

F. Provide spring loaded check valves on discharge of water pumps.

3.4 TEST

A. Upon completion of the domestic water piping system, if shall be tested and proved tight under a water pressure not less than 200 psi. The water used for testing shall be obtained from a potable source of supply. This pressure test shall be performed before the disinfection of the domestic water piping system is started. This test shall conform to the Louisiana State Plumbing Code

B. Upon completion of the sanitary sewer piping system the contractor shall perform a water test to prove that the system is tight and with out leaks. No section of the piping system shall be tested with less than 10 ft head of water. The pressure shall be kept on the system for a time no less that 1 hour. This test shall conform to the Louisiana State Plumbing Code.

C. Upon completion of the sanitary vent piping system the contractor shall perform a pressure test to prove that the system is tight and is with out leaks. This test shall conform to the Louisiana State Plumbing Code.

D. All Gas piping shall be tested in accordance to NFPA 54.

E. Prior to any test, the contractor shall notify the Architect in writing a minimum of 5 business days, the date and time the test will take place. No exceptions. After the completion of the test but before the building is substantially complete the contractor shall submit a written report with the following information for each test performed.

1. Project Name
2. Project Location
3. Plumbing Contractor Name, Address and Contact Information
4. Identification of test performed.
5. Time and Date test was started
6. Time and Date test was completed.

3.5 DISINFECTION OF DOMESTIC WATER PIPING SYSTEM:

A. Prior to starting work, verify system is complete, flushed and clean.

B. New or repaired potable water systems shall be purged of deleterious matter and disinfected prior to utilization. The method to be followed shall be that prescribed by the health authority or water purveyor having jurisdiction or, in the absence of a prescribed method, the procedure described in either AWWA C651 or AWWA C652, or as described in this section. This requirement shall apply to "onsite or in-plant" fabrication of a system or to a modular portion of a system.

1. The pipe system shall be flushed with clean, potable water until dirty water does not appear at the points of outlet.
2. The system or part thereof shall be filled with a water/chlorine solution containing not less than 50 parts per million (50 mg/L) of chlorine, and the system or part thereof

shall be valved off and allowed to stand for 24 hours; or the system or part thereof shall be filled with a water/chlorine solution containing not less than 200 parts per million (200 mg/L) of chlorine and allowed to stand for 3 hours.

3. Following the required standing time, the system shall be flushed with clean potable water until the chlorine is purged from the system.
4. The procedure shall be repeated where shown by a bacteriological examination that contamination remains present in the system.

C. Prior to the disinfection of the domestic water piping system the contractor shall inform the architect in writing the date and time the disinfection will take place. After the completion of the disinfection of the domestic water piping system but before the building is substantially completed the contractor shall submit a written report with the following information.

1. Project Name
2. Project Location
3. Plumbing Contractors Name, Address, and contact information
4. Chemicals used in the disinfection process.
5. Time and Date disinfection process was started
6. Time and Date disinfection process was completed

3.6 SERVICE CONNECTIONS:

A. Provide new sanitary and storm sewer services and tie into existing as shown on plans. Before commencing work check invert elevations required for sewer connections, confirm inverts and insure that these can be properly connected with slope for drainage and cover to avoid freezing. Contractor to tie in existing services as shown on drawings.

B. Tie domestic water into existing services as shown on drawings. Provide sleeve in wall for service main and support at wall with reinforced concrete bridge. Caulk enlarged sleeve and make watertight with pliable material. Provide 18-gauge galvanized sheet metal sleeve around service main to 6 inches above floor and 6 feet minimum below grade. Size for minimum of 2 inches of loose batt insulation stuffing. Contractor shall utilize and tie in existing water lines as indicated on the drawings.

C. Tie new gas service into existing onsite. Coordinate connection with gas service provider.

END OF SECTION 221000

SECTION 221010 - PLUMBING SPECIALTIES

PART 1 - GENERAL

1.1 WORK INCLUDED

A. Floor drains

B. Trap Primers

C. Cleanouts

D. Backflow preventors

E. Water hammer arrestors

F. Hose bibbs hydrants

1.2 RELATED WORK

A. Section 230529 - Supports and Anchors

B. Section 221000 - Plumbing Piping

C. Section 224000 - Plumbing Fixtures

1.3 REFERENCES

A. ANSI/ASSE 1012 - Backflow Preventers with immediate Atmospheric Cent.

B. ANSI/ASSE 1011 - Hose Connection Vacuum Breakers.

C. ANSI/ASSE 1013 - Backflow Preventers, Reduced Pressure Principle.

D. ANSI/ASSE 1019 - Wall Hydrants, Frost Proof Automatic Draining Anti-Backflow Types.

E. ANSI A112.21.1 - Roof Drains

F. ANSI A112.26.1 - Water Hammer Arrestors

G. PDI WH-201 Water Hammer Arrestors

1.4 QUALITY ASSURANCE

A. Manufacturer: For each product specified, provide components by same manufacturer throughout.

1.5 SUBMITTALS

A. Submit shop drawings and product data under provisions of Section 013000.

B. Include component sizes, rough-in requirements, service sizes, and finishes.

PART 2 - PRODUCTS

2.1 FLOOR DRAINS

A. Floor Drain (FD): ANSI A112.21.1; lacquered cast iron two piece body with double drainage flange, weep holes, reversible clamping collar, square adjustable nickel- bonze strainer, and trap primer connection; Wade model 1100G, Zurn model Z415s or Smith model 2005.

B. All floor drains installed shall have trap primers.

2.2 TRAP PRIMERS

A. Trap primers shall be PPP, Inc. Prime-Rite 500 with AG-500 air gap fitting. Distribution unit may be used for multiple floor drains. Trap primers shall be installed as per manufacturer recommendations and in strict accordance with the Louisiana Plumbing Code. Elastomeric flexible type trap guards will not be allowed on this project.

2.3 ROOF DRAINS

A. Roof Drains (RD): Duco Cast Iron body with adjustable extension sleeve, reversible collar, combined flashing clamp, under deck clamp, and gravel stop, with cast iron dome. Coordinate outlet with storm sewer piping. Wade model 3000-ADF, Zurn model Z100, or Smith model 1015.

2.4 EMERGENCY ROOF DRAIN

A. Emergency roof drain (ERD): Duco cast iron body with adjustable extension sleeve, 2" high combination membrane flashing clamp/gravel guard with cast iron dome drain. Coordinate outlet size with storm sewer piping. Zurn Z-100, Wade, or Smith.

2.5 FLOOR SINK

A. Floor sink (FS): 12"x12" floor sink with square nickel bronze top, 8" deep, aluminum dome strainer. Zurn Z1901, Wade 9144, or Smith 300.

2.6 CLEANOUTS

A. Exterior Surfaced Areas: As detailed on Plans.

B. Interior Finished Floor Areas: Lacquered cast iron, two piece body with double drainage flange, weep holes, reversible clamping collar, and adjustable nickel- bronze strainer, square with scoriated cover in service areas and square with depressed cover to accept floor finish in finished floor areas; Model W-6000 manufactured by Wade or Model ZN-1400 manufactured by Zurn or 4000 Series manufactured by Smith.

C. Interior Finished Wall Areas: Line type with lacquered cast iron body and round epoxy coated gasketted cover, and round stainless steel access cover secured with machine screw; Model W-8460-R manufactured by Wade or Model ZN-1445-1 manufactured by Zurn or Model 4532 manufactured by Smith.

D. Interior Unfinished Accessible Areas: Caulked or threaded type, provide bolted stack cleanouts on vertical rainwater leaders.

E. Acceptable Manufacturers

1. Wade 6000
2. Zurn 1400
3. Substitutions: Under provisions of Instructions To Bidders.

2.7 BACKFLOW PREVENTERS

A. Pressure Backflow Preventers: ANSI/ASSE 1013; bronze body with bronze and plastic internal parts and Stainless steel springs; two independently operating, spring loaded check valves; diaphragm type differential pressure relief valve located between check valves; third check valve which opens under back pressure in case of diaphragm failure; non-threaded vent outlet; assembled with two gate valves, strainer, and four test cocks.

B. Acceptable Manufacturers

1. Watts Model 909
2. Wilkins Model 375
3. Substitutions: Under provisions of Instructions To Bidders.

2.8 WATER HAMMER ARRESTORS

A. ANSI A112.26.1; sized in accordance with PDI WH-201, precharged suitable for operation in temperature range - 100 to 300 degrees F (-73 to 49 Degrees C) and maximum 250 psig (1700 kpa) working pressure.

B. Acceptable Manufactures

1. Wade Model W-5, W-10, W-20
2. Zurn Model Z-1700-100, 200, 300
3. Smith Model 5000
4. Substitutions: Under provisions of Instructions To Bidders.

PART 3 - EXECUTION

3.1 PREPARATION

A. Coordinate cutting forming of roof floor construction to receive drains to required invert elevations.

3.2 INSTALLATION AND APPLICATION

A. Install specialties in accordance with manufacturer's instructions to permit intended performance.

B. Extend cleanouts to finished floor or wall surface. Lubricate threaded cleanout plugs with mixture of graphite and linseed oil. Insure clearance at cleanout for rodding of drainage system.

C. Encase exterior cleanouts in concrete flush with grade.

D. Install water hammer arrestors complete with accessible isolation valve.

G. In pipe 3 – inch nominal diameter of less, cleanouts shall be located at not more than 50ft.intervals

H. In pipe 4 – inches nominal diameter through 6 inches nominal diameter, cleanouts shall be located at not more than 80ft. intervals

I. Each building drain shall be provided with a cleanout within 6ft. of the junction of the building drain and building sewer.

END OF SECTION 221010

SECTION 224000 - PLUMBING FIXTURES AND TRIM

PART 1 – GENERAL

1.1 SECTION INCLUDES

A. Plumbing Fixtures and Trim

1.2 RELATED WORK

A. Section 230000 - General Mechanical

B. Section 221000 - Plumbing Piping

C. Section 221010 - Plumbing Specialties

1.3 SUBMITTALS

A. Furnish and install plumbing fixtures as shown on the accompanying drawing and in accordance with the approved rough-in drawings. This will include service sinks, lavatories, water closets, urinals, etc., with all brass in connection with supply tubing, traps, escutcheons, stop and basin cocks, etc. All fixtures shall be new and must be delivered to the building properly crated and in perfect condition.

B. All brass must be best quality. All brass pipe to be seamless brass tubing and all fixture traps shall be heavy with C.O. plugs. Nipples shall be extra heavy. Lightweight goods will not be accepted. All exposed metal on fixtures shall be C.P. or Chromard. All "P" traps shall be complete with cleanout plug.

C. Contractor shall submit in his fixture brochure for approval, a rough-in sheet of each fixture and indicate any variation required for the fixtures. Fixtures are to be roughed-in in accordance with these approved rough-in sheets and anchored so that piping cannot be moved.

1.4 JOB CONDITIONS

A. Check millwork shop drawings. Conform location and size of fixtures and openings before rough-in and installation.

PART 2 – PRODUCTS – see plans

PART 3 – EXECUTION

3.1 INSTALLATION

A. Install furnish and install all plumbing fixtures and accessories according to manufacturer's instruction and according to national, state and local codes governing the various systems. Carefully review the Architectural floor plans and millwork details to determine exact number of all fixtures, outlets, and accessories required. Coordinate all fixtures, outlets, drains, accessories, etc., prior to submitting shop drawings.

B. Install each fixture in accordance with rough-in drawings as per manufacturers' recommendations. At completion thoroughly clean plumbing fixtures and equipment. Anchor fixtures rigidly; anchor piping in walls so that piping cannot be moved.

C. Provide chrome plated rigid or flexible supplies to fixtures with stops, reducers and escutcheons.

D. Solidly attach floor water closets to floor with lag screws and finishing caps.

E. Install each fixture with trap, easily removable for servicing and cleaning.

F. All fixtures supplied with domestic water, hot or cold, shall be installed with integral stops on all supply lines.

G. Mount fixtures to the following heights above finished floor:

1. Water Closets:
   a. Standard — 15" to top of bowl rim
   b. Handicapped — 18" to top of seat
2. Urinal:
   a. Standard — 22" to top of bowl rim
3. Lavatories:
   a. Handicapped — 34" to top of basin rim
4. Water Closet Flush Valves:
   a. Standard — 11" min. above bowl rim'

H. Contractor shall caulk all joints at walls and floors with plumbing fixtures.

I. Contractor shall provide approved ADA drain and water line insulation covers on all exposed services for lavatories and sinks. Truebro Lav Guard or approved equal.

3.2 FIXTURE ROUGH-IN SCHEDULE:

A. Rough-in fixture piping and size connections shall be in accordance with the following table of minimum sizes for particular fixtures unless noted different on the drawing:

PLUMBING FIXTURE ROUGH-IN SCHEDULE

DESCRIPTION	C.W.	H.W.	WASTE	VENT
WATER CLOSET (TANK)	½"	–	4"	3"
WATER CLOSET (FLUSH VALVE)	1"	--	4"	3"

URINAL (FLUSH VALVE)	3/4"	--	2"	1-1/2"
LAVATORY	½"	--	2"	1-1/2"
SERVICE SINK	½"	½"	3"	2"
ELECTRIC WATER COOLER	½"	--	2"	1-1/2"
SINK	½"	½"	2"	1-1/2"
HOSE BIBB	3/4"	--	--	--
2" FLOOR DRAIN	--	--	2"	1-1/2"
3" FLOOR DRAIN	--	--	3"	2"
3" HUB DRAIN	--	--	3"	2"

WATER PIPE SIZING TABLE

UNLESS SHOWN OTHERWISE, DOMESTIC WATER LINES SHALL RUN CONCEALED OVERHEAD AS DESIGNATED IN PLUMBING FIXTURE SCHEDULE AND BE SIZED ACCORDING TO TABLE BELOW.

PLANS AND RISER DIAGRAMS DO NOT NECESSARILY SHOW ALL PIPING RUNS. INSTALL A FACTORY SHOCK ABSORBER AT TOP OF EACH FIXTURE GROUP AND ALSO AT WATER HEATERS.

NUMBER OF FIXTURES*	PIPE SIZE (IPS)
2 OR LESS	1/2"
3 TO 5	3/4"
6 TO 10	1"
11 TO 15	1-1/4"
16 TO 28	1-1/2"

*FLUSH VALVE WATER CLOSET IS EQUIVALENT TO SIX (6) FIXTURES SIZES INDICATED ABOVE ARE MINIMUM SIZES TO BE USED UNLESS OTHERWISE STATED

END OF SECTION 224000

SECTION 230000 - GENERAL MECHANICAL

PART 1 - GENERAL CONDITIONS

1.1 WORK INCLUDED

A. The general conditions of the general specifications are made a part of these specifications and apply the same as if attached hereto. The contractor should, before bidding, read and thoroughly understand all general conditions, priority and scheduling.

1.2 SCOPE OF WORK

A. This section calls for the furnishing of labor, materials, equipment, and all the services, and of performing all operations required for the complete mechanical systems as hereinafter specified and/or shown on the accompanying drawings.

1.3 GENERAL REQUIREMENTS

A. Contractor shall install his work to meet the existing conditions as found at buildings and property, and to accommodate work of other trades. This contractor shall be responsible for timely placing of sleeves in forms before concrete is poured. Cooperate with the general contractor and place pipes and ducts in floors, walls, furred spaces, etc., so there will be no delay. Sheet metal or iron pipe sleeves shall be provided for pipes passing through floors, wall or partitions.

B. Contractor shall furnish and properly install materials, devices, equipment, insulation, controls, appurtenances, etc., mentioned in these specifications and/or shown on plans or required to make a complete and satisfactory installation in working order whether fully shown or not.

C. Contractor should visit the site and acquaint himself thoroughly with conditions governing installation of his work.

D. All other plans shall be checked in relation to these plans so that all conditions will be furnished and installed in this contract to provide complete and satisfactory systems.

1.4 LAWS, RULES, REGULATIONS, FEES, ETC.

A. The entire mechanical work shall comply with rules and regulations of the local and state authorities having jurisdiction including the State Fire Marshal and the State Board of Health. All modifications required by the said authorities at any time shall be made by the mechanical contractor without additional charge. In cases where alterations to or deviations from this specification and accompanying plans are required by the authorities, contractor shall report same to the Architect and obtain his approval before work is started.

1.5 DRAWINGS

A. Plans and detail sketches are submitted to limit, explain, and define structural conditions, specified requirements, pipe sizes, and manner of erecting work. Structural or other conditions may require certain deviations from manner of installation shown, and such deviations shall be made as required, but specified sizes and requirements necessary for satisfactory operation shall remain unchanged.

B. It may be necessary to shift or to change routing of ducts and or piping and this shall be done, but such changes must be referred to Architect for approval before proceeding. Extra charges will not be allowed for these changes.

C. Typical details are shown on plans, and in any cases where Contractor is not certain about the method of installation of this work, he shall ask for details, lack of details will not be an excuse for improper installation.

D. Contractor bidding on this portion of the work must be fully experienced in installations of equal size, complexity and quality. In bidding, he acknowledges that he fully understands the scope of the work and design and has the ability, for the contract price to assemble and install the equipment, piping, and ductwork shown or specified, so as to mold same into a satisfactory workable system and arrangement, without responsibility for capacities and sizes set by these documents.

E. Contractor shall recognize that the amount of information and detail that could be provided in Contract Documents is limitless and could extend into every minute detail, step, sequence, and operation to a point where only workmen would be required, without drawing on ability experience, and ingenuity of the Contractor.

1.6 MATERIALS

A. Where directed by the Architect, Contractor shall submit sample for approval before proceeding.

1.7 STANDARDS

A. In general, standards for products and workmanship shall be as described in each individual section.

B. The standards referred to, except as modified in these specifications shall have full force and effect as though printed in these specifications. These standards are not furnished to bidders for the reason that the manufacturers and trades involved are assumed to be familiar with their requirements. The Architect will furnish, upon request, information as to how copies of the standards referred to may be obtained.

C. Notwithstanding any reference in this section of the specifications to any article, device, product, material, fixture, form or type of construction by name, make or catalogue number, such references shall be interpreted as establishing a standard of quality and shall not be construed limiting competition and the Contractor in such cases, may at his option, use any article, device, product, material, fixture, form or type of construction which in the judgment of the Architect, expressed in writing, is equal to that specified.

1.8 MATERIALS SPECIFIED OR SUBSTITUTED (Prior Approvals)

A. Refer to Instructions to Bidders.

1.9 SHOP DRAWINGS

A. Before proceeding with the work, contractor shall make complete shop and working drawings of such apparatus or connections as directed by the Architect and/or hereinafter specified. These drawings shall show construction details and dimensions of each piece of equipment so drawn.

B. Architects approval of shop drawings shall not relieve the Contractor from responsibility of incorrectly figured dimensions or any other errors in these drawings or specified even though approved by the Architect, shall not relieve this Contractor from furnishing and erecting same.

C. Ten (10) sets of prints of shop drawings shall be submitted to Architect for approval. These prints shall be supplied as part of this contract. Submit all shop drawings at the same time or as soon as practical after award of the contract. No separate items will be accepted.

D. Where laws or local regulations provide that certain accessories such as gauges, thermometers, relief valves and parts be installed on equipment, it shall be understood that such accessories shall be furnished if no specific reference to them is made in the specifications.

1.10 CUTTING AND PATCHING

A. All cutting necessary for this work will be done by this Contractor at his own expense, but all patching shall be done by the General Contractor. No beams or joists shall be cut without prior approval of Architect. After initial resurfacing has been done any further cutting, patching or painting shall be done at the expense of this Contractor.

1.11 INTERFERENCES

A. The drawings are generally diagrammatic and this Contractor shall harmonize his work with that of the different trades so that interferences of the different equipment, piping, etc., shall be installed so as to function properly. In the case where interference develops, the Architect is to state which equipment, piping, etc., is to be relocated regardless of which item was first installed.

1.12 EXCAVATION AND BACKFILL

A. This Contractor shall do all excavating required to lay the specified services and after same have been laid, he shall do all backfilling to the satisfaction of all parties concerned and shall cart away from the premises all unnecessary dirt, rubbish, etc., as directed. Backfill shall be well tamped. All backfill shall be done according to the "Compaction And Backfill" section of these specifications.

1.13 SPACE REQUIREMENTS

A. Contractor shall check all plans pertaining to this job so as to be fully aware of the space limitations for all various items of equipment. Equipment is not to be bid on, submitted for preliminary approval nor placed on the job if it is so bulky and large that adequate access for proper maintenance and servicing cannot be achieved in the space provided.

1.14 FOUNDATIONS AND SUPPORTS

A. This contractor shall furnish and install foundations and supports of concrete or steel shapes for equipment requiring same, unless specifically indicated otherwise or specified.

B. All floor mounted mechanical equipment shall be mounted on 4" high concrete housekeeping pad unless specifically shown otherwise on plans. Refer to plans for special requirements for foundations and supports.

1.15 HANGERS, ESCUTCHEONS, ETC.

A. See Section 230529 – Supports and Anchors.

B. Mechanical Contractor shall furnish and install all thimbles, inserts and other requirements necessary for the support of his equipment and piping. Assist and cooperate with other trades in locating and placing these items.

1.16 CEILING AND WALL ACCESS PANEL

A. Factory made access doors and frames, prime coat finish, screw driver latch(s) of suitable size as required.

B. Access panels in rated ceiling to have same rating as ceiling.

C. Where valves, dampers, controls, fire dampers, smoke dampers, and detectors, reheat coils, etc. are concealed in walls or non-accessible ceilings, install factory made access doors and frames.

1.17 DUCTWORK ACCESS PANNELS

A. Access panels in ductwork to be double wall type with insulation sandwiched in between, same insulation value as adjacent ductwork.

1.18 SIPHON PREVENTERS

A. Furnish and install approved type siphon preventors on all equipment and fixtures in such a manner as to prevent water being siphoned back into the water supply in the event the water supply is shut off.

1.19 FLAME SPREAD PROPERTIES OF MATERIALS

A. All materials and adhesives used for acoustical linings, jackets and insulation shall comply with requirements of NFPA 90A and 90B and UL guide # 40V.8.15. Products exceeding a flame spread rating of 25, or a smoke developed rating of 50, as determined by ASTM Test Method E-84 are prohibited. Adhesives and sealers shall be fire retardant and fire resistant when dry. Flame proofing treatments which are subject to decomposition, deterioration, or the effects of moisture are prohibited.

1.20 DOMESTIC AND FIRE WATER TIE-IN

A. Contractor shall provide any necessary meters and tap fees for domestic or fire water tie-ins to utility companies. All domestic and fire water taps shall have aboveground reduced pressure back flow preventors near the tie-in point. Coordinate with Engineer exact location.

B. All backflow preventors shall be heat traced and insulated with 1-1/2" fiberglass insulation with water tight aluminum jacket.

1.21 PROTECTION OF EQUIPMENT

A. See individual sections for protection of equipment.

B. This Contractor shall at all times take such precautions as may be necessary to properly protect his equipment from damage. Failure on the part of the Contractor to comply with the above to the entire satisfaction of the Architect will be sufficient cause for the rejection of the particular piece of equipment in question.

1.22 TESTING

A. All pressure lines, unless elsewhere specified, shall be tested under 150# hydrostatic pressure unless rated pressure is less for a minimum of 5 hours. Contractor shall provide valve at farthest point in line to bleed off air and for inspection.

B. Notice shall be given the Architect before tests are made, the test is not to be drawn off pipes and pipes are not to be covered or insulated until filled pipes have been examined and testing approved by the Architect.

C. In case of defects, they shall be made good to the satisfaction of the Architect and work retested. All such work shall be done by the Contractor with no additional expense to the Owner.

D. Contractor shall make any other such tests as may be called for by the Architect, and all other tests so called for elsewhere in these specifications.

1.23 CLEANING AND ADJUSTING

A. Before receiving final approval from the Architect, the Contractor shall clean out all lines;

adjust all valves, control equipment and other equipment. Clean all pipe and equipment and leave the entire installation in good working order. All heaters, fans, grilles, controls, etc., shall be adjusted to perform in correct and satisfactory manner, with sequences, etc., as called for in the specifications hereinafter specified and on plans.

1.24 PAINTING

A. Refer to Section 099000 – Painting and Coating and 230553 – Mechanical Identification for painting requirements.

1.25 MOTORS, MOTOR STARTERS AND ELECTRICAL WORK

A. Refer to Section 230513 - Motors.

B. Motors shall be suitable for voltage indicated on the plans, plus or minus 10% and be designed for constant operation at 40 degrees C ambient, 65 degrees C rise for class A, 90 degrees C rise for Class B, etc. Electrical equipment furnished under this contract shall meet standards as set forth by NEMA and NEC requirements. All electrical equipment shall be UL labeled.

1.26 PARTS LIST AND INSTRUCTION MANUAL

A. See individual sections for specific instructions.

B. This Contractor shall deliver to the Architect three (3) copies of printed instructions relating to operating, proper maintenance and repair parts list indicating the various parts by name, number and diagram for each piece of equipment installed. Test and balance report shall also be included in parts list and instruction manual.

C. The shop drawings, parts list, and maintenance and repair instructions shall be neatly bound in a canvas-covered notebook and turned over to the Architect before acceptance of the work.

1.27 BOILER TEST CERTIFICATES

A. Each boiler, water heater (with a capacity equal to or greater than 50 gallons), and pressure vessels are to be inspected by a State of Louisiana certified inspector upon installation.

B. Submit a copy of each report to the Architect and include one copy in each of the Close-out Manuals.

1.28 GUARANTEE

A. Contractor shall guarantee materials, equipment and workmanship installed and performed under this contract for a period of one (1) year from date of the final completion and official acceptance of the contract.

B. He shall furnish free of charge to the Owner all materials and labor necessary to comply with the above guarantee, which shall be based on defective materials and/or workmanship, and on such basis shall be responsible if a deficiency is found, for any adjustment, replacement, or correction which may be necessary to replace the project to first class condition. This guarantee shall include refrigerant charges, but shall not include the changing of filters.

1.29 RECORD DRAWINGS

A. The Contractor shall maintain a set of record drawings on-site throughout the construction. The record drawings shall reflect accurate dimensional record of all underground, buried, above ceiling, or otherwise concealed work.

B. The Contractor shall maintain these record documents and keep them up-to-date daily.

END OF SECTION 230000

SECTION 230500 - BASIC MECHANICAL MATERIALS AND METHODS

PART 1 - GENERAL

1.1 SUMMARY

A. This Section includes the following:

1. Piping materials and installation instructions common to most piping systems.
2. Dielectric fittings.
3. Mechanical sleeve seals.
4. Sleeves.
5. Escutcheons.
6. Grout.
7. Mechanical demolition.
8. Equipment installation requirements common to equipment sections.
9. Concrete bases.
10. Supports and anchorages.

1.2 DEFINITIONS

A. Finished Spaces: Spaces other than mechanical and electrical equipment rooms, furred spaces, pipe and duct shafts, unheated spaces immediately below roof, spaces above ceilings, unexcavated spaces, crawlspaces, and tunnels.

B. Exposed, Interior Installations: Exposed to view indoors. Examples include finished occupied spaces and mechanical equipment rooms.

C. Exposed, Exterior Installations: Exposed to view outdoors or subject to outdoor ambient temperatures and weather conditions. Examples include rooftop locations.

D. Concealed, Interior Installations: Concealed from view and protected from physical contact by building occupants. Examples include above ceilings and in duct shafts.

E. Concealed, Exterior Installations: Concealed from view and protected from weather conditions and physical contact by building occupants but subject to outdoor ambient temperatures. Examples include installations within unheated shelters.

1.3 SUBMITTALS

A. Welding certificates.

1.4 QUALITY ASSURANCE

A. Steel Support Welding: Qualify processes and operators according to AWS D1.1, "Structural Welding Code--Steel."

B. Steel Pipe Welding: Qualify processes and operators according to ASME Boiler and Pressure Vessel Code: Section IX, "Welding and Brazing Qualifications."

1. Comply with provisions in ASME B31 Series, "Code for Pressure Piping."
2. Certify that each welder has passed AWS qualification tests for welding processes involved and that certification is current.

C. Electrical Characteristics for Mechanical Equipment: Equipment of higher electrical characteristics may be furnished provided such proposed equipment is approved in writing and connecting electrical services, circuit breakers, and conduit sizes are appropriately modified. If minimum energy ratings or efficiencies are specified, equipment shall comply with requirements.

PART 2 - PRODUCTS

2.1 PIPE, TUBE, AND FITTINGS

A. Refer to individual Division 23 piping Sections for pipe, tube, and fitting materials and joining methods.

B. Pipe Threads: ASME B1.20.1 for factory-threaded pipe and pipe fittings.

2.2 JOINING MATERIALS

A. Refer to individual Division 23 piping Sections for special joining materials not listed below.

B. Pipe-Flange Gasket Materials: ASME B16.21, nonmetallic, flat, asbestos-free, 1/8-inch (3.2-mm) maximum thickness unless thickness or specific material is indicated.

C. Plastic, Pipe-Flange Gasket, Bolts, and Nuts: Type and material recommended by piping system manufacturer, unless otherwise indicated.

D. Solder Filler Metals: ASTM B 32, lead-free alloys. Include water-flushable flux according to ASTM B 813.

E. Brazing Filler Metals: AWS A5.8, BCuP Series or BAg1, unless otherwise indicated.

F. Welding Filler Metals: Comply with AWS D10.12.

G. Solvent Cements for Joining Plastic Piping:

1. ABS Piping: ASTM D 2235.
2. CPVC Piping: ASTM F 493.
3. PVC Piping: ASTM D 2564. Include primer according to ASTM F 656.
4. PVC to ABS Piping Transition: ASTM D 3138.

2.3 DIELECTRIC FITTINGS

A. Description: Combination fitting of copper alloy and ferrous materials with threaded, solder-joint, plain, or weld-neck end connections that match piping system materials.

B. Insulating Material: Suitable for system fluid, pressure, and temperature.

C. Dielectric Unions: Factory-fabricated, union assembly, for 250-psig (1725-kPa) minimum working pressure at 180 deg F (82 deg C).

D. Dielectric Flanges: Factory-fabricated, companion-flange assembly, for 150- or 300-psig (1035- or 2070-kPa) minimum working pressure as required to suit system pressures.

E. Dielectric Couplings: Galvanized-steel coupling with inert and noncorrosive, thermoplastic lining; threaded ends; and 300-psig (2070-kPa) minimum working pressure at 225 deg F (107 deg C).

F. Dielectric Nipples: Electroplated steel nipple with inert and noncorrosive, thermoplastic lining; plain, threaded, or grooved ends; and 300-psig (2070-kPa) minimum working pressure at 225 deg F (107 deg C).

2.4 MECHANICAL SLEEVE SEALS

A. Description: Modular sealing element unit, designed for field assembly, to fill annular space between pipe and sleeve.

B. Sealing Elements: NBR interlocking links shaped to fit surface of pipe. Include type and number required for pipe material and size of pipe.

C. Pressure Plates: Carbon steel. Include two for each sealing element.

D. Connecting Bolts and Nuts: Stainless steel of length required to secure pressure plates to sealing elements. Include one for each sealing element.

2.5 SLEEVES

A. Galvanized-Steel Sheet: 0.0239-inch (0.6-mm) minimum thickness; round tube closed with welded longitudinal joint.

B. Steel Pipe: ASTM A 53, Type E, Grade B, Schedule 40, galvanized, plain ends.

C. Cast Iron: Cast or fabricated "wall pipe" equivalent to ductile-iron pressure pipe, with plain ends and integral waterstop, unless otherwise indicated.

D. Stack Sleeve Fittings: Manufactured, cast-iron sleeve with integral clamping flange. Include clamping ring and bolts and nuts for membrane flashing.

1. Underdeck Clamp: Clamping ring with set screws.

E. Molded PVC: Permanent, with nailing flange for attaching to wooden forms.

F. PVC Pipe: ASTM D 1785, Schedule 40.

G. Molded PE: Reusable, PE, tapered-cup shaped, and smooth-outer surface with nailing flange for attaching to wooden forms.

2.6 ESCUTCHEONS

A. Description: Manufactured wall and ceiling escutcheons and floor plates, with an ID to closely fit around pipe, tube, and insulation of insulated piping and an OD that completely covers opening.

B. One-Piece, Deep-Pattern Type: Deep-drawn, box-shaped brass with polished chrome-plated finish.

C. One-Piece, Cast-Brass Type: With set screw.

1. Finish: Polished chrome-plated and rough brass.

D. Split-Casting, Cast-Brass Type: With concealed hinge and set screw.

1. Finish: Polished chrome-plated and rough brass.

2.7 GROUT

A. Description: ASTM C 1107, Grade B, non-shrink and nonmetallic, dry hydraulic-cement grout.
1. Characteristics: Post-hardening, volume-adjusting, non-staining, noncorrosive, nongaseous, and recommended for interior and exterior applications.
2. Design Mix: 5000-psi (34.5-MPa), 28-day compressive strength.
3. Packaging: Premixed and factory packaged.

PART 3 - EXECUTION

3.1 PIPING SYSTEMS - COMMON REQUIREMENTS

A. Install piping according to the following requirements and Division 23 Sections specifying piping systems.

B. Drawing plans, schematics, and diagrams indicate general location and arrangement of piping systems. Indicated locations and arrangements were used to size pipe and calculate friction loss, expansion, pump sizing, and other design considerations. Install piping as indicated unless deviations to layout are approved on Coordination Drawings.

C. Install piping in concealed locations, unless otherwise indicated and except in equipment rooms and service areas.

D. Install piping indicated to be exposed and piping in equipment rooms and service areas at right angles or parallel to building walls. Diagonal runs are prohibited unless specifically indicated otherwise.

E. Install piping above accessible ceilings to allow sufficient space for ceiling panel removal.

F. Install piping to permit valve servicing.

G. Install piping at indicated slopes.

H. Install piping free of sags and bends.

I. Install fittings for changes in direction and branch connections.

J. Install piping to allow application of insulation.

K. Select system components with pressure rating equal to or greater than system operating pressure.

L. Install escutcheons for penetrations of walls, ceilings, and floors.

M. Install sleeves for pipes passing through concrete and masonry walls, gypsum-board partitions, and concrete floor and roof slabs.

N. Aboveground, Exterior-Wall Pipe Penetrations: Seal penetrations using sleeves and mechanical sleeve seals. Select sleeve size to allow for 1-inch (25-mm) annular clear space between pipe and sleeve for installing mechanical sleeve seals.

1. Install steel pipe for sleeves smaller than 6 inches (150 mm) in diameter.
2. Install cast-iron "wall pipes" for sleeves 6 inches (150 mm) and larger in diameter.
3. Mechanical Sleeve Seal Installation: Select type and number of sealing elements required for pipe material and size. Position pipe in center of sleeve. Assemble mechanical sleeve seals and install in annular space between pipe and sleeve. Tighten bolts against pressure plates that cause sealing elements to expand and make watertight seal.

O. Underground, Exterior-Wall Pipe Penetrations: Install cast-iron "wall pipes" for sleeves. Seal pipe penetrations using mechanical sleeve seals. Select sleeve size to allow for 1-inch (25-mm) annular clear space between pipe and sleeve for installing mechanical sleeve seals.

1. Mechanical Sleeve Seal Installation: Select type and number of sealing elements required for pipe material and size. Position pipe in center of sleeve. Assemble mechanical sleeve seals and install in annular space between pipe and sleeve. Tighten bolts against pressure plates that cause sealing elements to expand and make watertight seal.

P. Fire-Barrier Penetrations: Maintain indicated fire rating of walls, partitions, ceilings, and floors at pipe penetrations. Seal pipe penetrations with firestop materials. Refer to Division 7 Section "Through-Penetration Firestop Systems" for materials.

Q. Verify final equipment locations for roughing-in.

R. Refer to equipment specifications in other Sections of these Specifications for roughing-in requirements.

3.2 PIPING JOINT CONSTRUCTION

A. Join pipe and fittings according to the following requirements and Division 15 Sections specifying piping systems.

B. Ream ends of pipes and tubes and remove burrs. Bevel plain ends of steel pipe.

C. Remove scale, slag, dirt, and debris from inside and outside of pipe and fittings before assembly.

D. Soldered Joints: Apply ASTM B 813, water-flushable flux, unless otherwise indicated, to tube end. Construct joints according to ASTM B 828 or CDA's "Copper Tube Handbook," using lead-free solder alloy complying with ASTM B 32.

E. Brazed Joints: Construct joints according to AWS's "Brazing Handbook," "Pipe and Tube" Chapter, using copper-phosphorus brazing filler metal complying with AWS A5.8.

F. Threaded Joints: Thread pipe with tapered pipe threads according to ASME B1.20.1. Cut threads full and clean using sharp dies. Ream threaded pipe ends to remove burrs and restore full ID. Join pipe fittings and valves as follows:

1. Apply appropriate tape or thread compound to external pipe threads unless dry seal threading is specified.
2. Damaged Threads: Do not use pipe or pipe fittings with threads that are corroded or damaged. Do not use pipe sections that have cracked or open welds.

G. Welded Joints: Construct joints according to AWS D10.12, using qualified processes and welding operators according to Part 1 "Quality Assurance" Article.

H. Flanged Joints: Select appropriate gasket material, size, type, and thickness for service application. Install gasket concentrically positioned. Use suitable lubricants on bolt threads.

I. Plastic Piping Solvent-Cement Joints: Clean and dry joining surfaces. Join pipe and fittings according to the following:

1. Comply with ASTM F 402, for safe-handling practice of cleaners, primers, and solvent cements.
2. ABS Piping: Join according to ASTM D 2235 and ASTM D 2661 Appendixes.
3. CPVC Piping: Join according to ASTM D 2846/D 2846M Appendix.
4. PVC Pressure Piping: Join schedule number ASTM D 1785, PVC pipe and PVC socket fittings according to ASTM D 2672. Join other-than-schedule-number PVC pipe and socket fittings according to ASTM D 2855.
5. PVC Non-pressure Piping: Join according to ASTM D 2855.
6. PVC to ABS Non-pressure Transition Fittings: Join according to ASTM D 3138 Appendix.

J. Plastic Pressure Piping Gasketed Joints: Join according to ASTM D 3139.

K. Plastic Non-pressure Piping Gasketed Joints: Join according to ASTM D 3212.

L. PE Piping Heat-Fusion Joints: Clean and dry joining surfaces by wiping with clean cloth or paper towels. Join according to ASTM D 2657.

1. Plain-End Pipe and Fittings: Use butt fusion.
2. Plain-End Pipe and Socket Fittings: Use socket fusion.

M. Fiberglass Bonded Joints: Prepare pipe ends and fittings, apply adhesive, and join according to pipe manufacturer's written instructions.

3.3 PIPING CONNECTIONS

A. Make connections according to the following, unless otherwise indicated:

1. Install unions, in piping NPS 2 (DN 50) and smaller, adjacent to each valve and at final connection to each piece of equipment.
2. Install flanges, in piping NPS 2-1/2 (DN 65) and larger, adjacent to flanged valves and at final connection to each piece of equipment.
3. Dry Piping Systems: Install dielectric unions and flanges to connect piping materials of dissimilar metals.
4. Wet Piping Systems: Install dielectric coupling and nipple fittings to connect piping materials of dissimilar metals.

3.4 EQUIPMENT INSTALLATION - COMMON REQUIREMENTS

A. Install equipment to allow maximum possible headroom unless specific mounting heights are not indicated.

B. Install equipment level and plumb, parallel and perpendicular to other building systems and components in exposed interior spaces, unless otherwise indicated.

C. Install mechanical equipment to facilitate service, maintenance, and repair or replacement of components. Connect equipment for ease of disconnecting, with minimum interference to other installations. Extend grease fittings to accessible locations.

D. Install equipment to allow right of way for piping installed at required slope.

3.5 CONCRETE BASES

A. Concrete Bases: Anchor equipment to concrete base according to equipment manufacturer's written instructions and according to seismic codes at Project.

1. Construct concrete bases of dimensions indicated, but not less than 4 inches (100 mm) larger in both directions than supported unit.
2. Install dowel rods to connect concrete base to concrete floor. Unless otherwise indicated, install dowel rods on 18-inch (450-mm) centers around the full perimeter of the base.
3. Install epoxy-coated anchor bolts for supported equipment that extend through concrete base, and anchor into structural concrete floor.

4. Place and secure anchorage devices. Use supported equipment manufacturer's setting drawings, templates, diagrams, instructions, and directions furnished with items to be embedded.
5. Install anchor bolts to elevations required for proper attachment to supported equipment.
6. Install anchor bolts according to anchor-bolt manufacturer's written instructions.
7. Use 3000-psi (20.7-MPa), 28-day compressive-strength concrete and reinforcement.

3.6 ERECTION OF METAL SUPPORTS AND ANCHORAGES

A. Refer to Division 5 Section "Metal Fabrications" for structural steel.

B. Cut, fit, and place miscellaneous metal supports accurately in location, alignment, and elevation to support and anchor mechanical materials and equipment.

C. Field Welding: Comply with AWS D1.1.

3.7 ERECTION OF WOOD SUPPORTS AND ANCHORAGES

A. Cut, fit, and place wood grounds, nailers, blocking, and anchorages to support, and anchor mechanical materials and equipment.

B. Select fastener sizes that will not penetrate members if opposite side will be exposed to view or will receive finish materials. Tighten connections between members. Install fasteners without splitting wood members.

C. Attach to substrates as required to support applied loads.

3.8 GROUTING

A. Mix and install grout for mechanical equipment base bearing surfaces, pump and other equipment base plates, and anchors.

B. Clean surfaces that will come into contact with grout.

C. Provide forms as required for placement of grout.

D. Avoid air entrapment during placement of grout.

E. Place grout, completely filling equipment bases.

F. Place grout on concrete bases and provide smooth bearing surface for equipment.

G. Place grout around anchors.

H. Cure placed grout.

END OF SECTION 230500

SECTION 230513 - MOTORS

PART 1 - GENERAL

1.1 SECTION INCLUDES

A. Single phase electric motors.

B. Three phase electric motors.

1.2 RELATED WORK

A. Section 232123 - Pumps

1.3 REFERENCES

A. AFBMA 9 - Load Ratings and Fatigue Life for Ball Bearings.

B. AFBMA 11 - Load Ratings and Fatigue Life for Roller Bearings.

C. ANSI/IEEE 112 - Test Procedure for Polyphase Induction Motors and Generators.

D. ANSI/NEMA MG 1 - Motors and Generators

E. ANSI/NEMA 70 - National Electrical Code

1.4 SUBMITTALS

A. Submit product data under provisions of Sections 013000 - Administrative Requirements & 230000 – General Mechanical.

B. Submit test results verifying nominal efficiency and power factor for three phase motors larger than 5 horsepower.

1.5 OPERATION AND MAINTENANCE DATA

A. Submit operation and maintenance data under provisions of Section 017000 - Execution Requirements.

B. Include assembly drawings, bearing data including replacement sizes, and lubrication instructions.

1.6 QUALIFICATIONS

A. Manufacturer: Company specializing in manufacture of electric motors for commercial use, and their accessories, with documented product development, testing, and manufacturing experience.

1.7 REGULATORY REQUIREMENTS

A. Conform to ANSI/NFPA 70.

1.8 DELIVERY, STORAGE, AND HANDLING

A. Deliver products to site under provisions of Section 016000 – Product Requirements.

B. Store and protect products under provisions of Section 016000 – Product Requirements.

C. Protect motors stored on site from weather and moisture by maintaining factory covers and suitable weather-proof covering. (For extended outdoor storage, remove motors from equipment and store separately).

1.9 WARRANTY - See General Section 230000 – General Mechanical.

PART 2 - PRODUCTS

2.1 MOTORS

A. Motors controlled by VFD's shall comply with NEMA MG1, Part 31, Definite Purpose Inverter Fed Motors (withstand repeated voltage peaks of 1600V with rise times of 0.1 microseconds and greater).

B. Starters for single phase motors which are not automatically started shall be manual type with melting alloy thermal overload protection and pilot light. Starters for automatically controlled single phase motors shall be magnetic type with NEMA rated AC magnetic contactor, melting alloy thermal overloads and pilot light.

C. Starters for three phase motors 25 horsepower and below shall be combination type starter/disconnect, full voltage non reversing (FVNR), with magnetic NEMA rated contactors rated for horsepower of motor served, adjustable trip magnetic circuit breaker disconnect (circuit breaker, not a fused switch) capable of being padlocked in the open position, 10K a/c minimum fault rating with higher rating when necessary due to available faut levels. Starters shall have a fused 100VA minimum control transformer (120V unless required otherwise), HOA switch, push to test operating pilot light, solid state overload relays set for actual motor nameplate full load amps, phase failure and phase reversal protection relay, minimum two N.O. and two N.C. auxiliary contracts and terminal blocks factory prewired for field wiring. Starters shall be housed in a NEMA 1 enclosure for indoor locations and NEMA 3R enclosure for outdoor or wet locations.

D. Starter for motors 30 horsepower and above shall be soft start type or variable frequency drives

E. Coordinate with electrical and specify fault rating on all motor controllers.

2.2 MANUFACTURERS

A. Electrical Service - Refer to Division 26 for required electrical characteristics.

B. Motors: Design for continuous operation in 40 degrees C environment, and for temperature rise in accordance with ANSI/NEMA MG 1 limits for insulation class, Service Factor, and motor enclosure type.

C. Visible Nameplate: Indicating motor information as required by NEC 430-7(a).

D. Electrical Connection: Conduit connection boxes, threaded for conduit. For fractional horsepower motors where connection is made directly, provide screwed conduit connection in end frame.

E. Starters: General electric, Cerus Industrial

2.3 SINGLE PHASE POWER - PERMANENT-SPLIT CAPACITOR MOTORS

A. Starting Torque: Exceeding one fourth of full load torque.

B. Starting Current: Up to six times full load current.

C. Multiple Speed: Through tapped windings.

D. Open Drip-proof or Enclosed Air Over Enclosure: Class A 65 degree C temperature rise insulation, Minimum 1.15 service factor, pre-lubricated sleeve or ball bearings, automatic reset overload protector.

2.4 SINGLE PHASE POWER - CAPACITOR START MOTORS

A. Starting Torque: Three times full load torque.

B. Starting Current: Less than five times full load current.

C. Pull-up Torque: Up to 350 percent of full load torque.

D. Breakdown Torque: Approximately 250 percent of full load torque.

E. Motors: Capacitor in series with starting winding; capacitor-start/capacitor-run motors shall have two capacitors in parallel with run capacitor remaining in circuit at operating speeds.

F. Drip-proof Enclosure: Class A 65 degree C temperature rise insulation, NEMA service factor, pre-lubricated sleeve ball bearings.

G. Enclosed Motors: Class A 65 degree C temperature rise insulation, NEMA service factor, pre-lubricated sleeve ball bearings.

2.5 THREE PHASE POWER - SQUIRREL CAGE MOTORS

A. Starting Torque: Between one and one-half times full load torque.

B. Starting Current: Six times full load current.

C. Power Output, Locked Rotor Torque, Breakdown or Pullout Torque: NEMA Design B characteristics.

D. Design, Construction, Testing, and Performance: Conform to ANSI/NEMA MG for design B motors.

E. Insulation System: NEMA Class B or better.

F. Testing Procedure: In accordance with ANSI/IEEE 12, Test Method B. Load test motors to determine freedom from electrical or mechanical defects and compliance with performance data.

G. Motor Frames: NEMA standard T-frames of steel, aluminum, or cast iron with end brackets of cast iron or aluminum with steel inserts.

H. Thermister System (Motor Frame Sizes 254T and larger): Three PTC thermister imbedded in motor windings and epoxy encapsulated solid state control relay for wiring into motor starter.

I. Bearings: Grease lubricated anti-friction ball bearings with housings equipped with plugged provision for re-lubrication, rated for minimum AFBMA 9, L-10 life of 20,000 hours. Calculate bearing load with NEMA minimum V-belt pulley with belt center line at end of NEMA standard shaft extension. Stamp bearing sizes on nameplate.

J. Sound Power Levels: To ANSI/NEMA MG1.

K. Nominal Efficiency: Meet or exceed values in schedules at full load and rated voltage when tested in accordance with ANSI/IEEE 112, and ASHRAE 90.1.

L. Motors, Motor Starters and Electrical Work: Mechanical Contractor shall furnish all motors, motor starters, start-stop push buttons, pilot lights, firestats, interlocking diagrams, etc. for each piece of motor driven equipment under this Contract. Mechanical Contractor shall install all motors. All motor starters, start-stop push buttons, pilot lights, etc. shall be turned over to the Electrical Contractor for installation. Electrical contractor shall be responsible for power wiring. This contractor will be responsible for control wiring.

M. Motor Starters and Push Buttons: All automatic starters shall be nominal 600 volt rating. All starters shall have two (2) auxiliary contacts.

1. Starters for single speed motors, 3/4 through 25 HP inclusive, shall be magnetically operated, "Across-the-line" 3 phase, with three overload relays, "HAND-OFF-AUTO" selector switch and pilot in cover. Starters shall be combination type with fused or circuit breaker type disconnect mechanism.
2. Starters for 30 HP and larger are to be reduced voltage, auto-transformer, combination type with fused or circuit breaker type disconnect mechanism. Starters shall be complete with three overload relays, "HAND-OFF-AUTO" selector switch and

pilot lights.

3. Enclosures for starters mounted indoors shall be NEMA 1. Enclosures for starters mounted outdoors or in wet areas shall be NEMA 3 R.
4. Remote push button stations shall be as follows: Start-stop stations shall be recess mounted with neon pilot lamp of proper voltage.
5. Push buttons for controls which are interlocked with automatic controls shall be maintained contact type. All others may be of momentary contact type.
6. Control voltage for all motor starters shall 120 volts provided by integral control voltage transformers.
7. If the Mechanical Contractor purchases equipment of larger horsepower than specified or shown on the plans, he shall pay all costs to increase the wiring and conduit.

PART 3 - EXECUTION

3.1 APPLICATION

A. Motors drawing less than 250 watts and intended for intermittent service may be germaine to equipment manufacturer and need not conform to these specifications.

B. Motors shall be open drip-proof type, except where specifically noted otherwise.

C. Single phase motors for shaft mounted fans or blowers shall be permanent split capacitor type.

3.2 NEMA OPEN MOTOR SERVICE FACTORS

HORSEPOWER	3600 RPM	1800 RPM	1200 RPM	900 RPM
1/6-1/3	1.35	1.35	1.35	1.35
1/2	1.25	1.25	1.25	1.15
3/4	1.25	1.25	1.15	1.15
1	1.25	1.15	1.15	1.15

3.3 MOTOR EFFICIENCY

A. Each motor furnished on the job must meet ASHRAE 90.1 and shall have a minimum guaranteed efficiency as listed in table below. Minimum guaranteed efficiencies for all motors shall be clearly stamped on motor nameplate. The lack of such stamp shall be cause for rejection of motor.

HORSEPOWER	EFFICIENCY
1, 1-1/2, 2	84.00
3	88.50
5, 7-1/2, 10	90.20
15, 20	91.70

25, 30, 40	93.00
50, 60, 75	94.10
100, 125, 150, 200	95.00

END OF SECTION 230513

SECTION 230515 - VARIABLE FREQUENCY DRIVES (VFD)

PART 1 - GENERAL

1.1 SUMMARY

A. Section Includes

1. Variable Frequency Drive (VFD)
2. Options, including bypass

1.2 REFERENCES

A. UL 508

B. UL 94

C. CSA 22.2 no.14

D. NEMA ICS 3, ICS 4

E. IEEE 444 (ANSI-C343)

F. IEEE 519-1981

G. IEC 146A

1.3 SUBMITTALS

A. Product Data

1. General description
2. Ratings and weights

B. Shop Drawings

1. Outline dimensions
2. Mounting points
3. Interconnecting wiring diagrams

C. Manufacturer's Installation Instructions

1. Installation methods
2. Connection points

PART 2 - PRODUCTS

2.1 MANUFACTURERS

A. MagneTek

B. Allen Bradley.

C. ABB

D. GE

E. Yaskawa

F. Danfoss

2.2 VARIABLE FREQUENCY DRIVE (VFD)

A. DESCRIPTION: VFD converts fixed frequency utility power into adjustable frequency power necessary to operate three phase AC motors at variable speed. VFD incorporates microprocessor logic to ease user set up for application functions.

B. OPERATING PRINCIPLE: Input three phase AC line voltage is first rectified to a fixed DC voltage. Using pulse width modulation (PWM) inverter technology, the DC voltage is processed to produce an output voltage waveform in a series of variable width pulses. Because of high frequency of these voltage pulses, output current closely approximates a true sinusoidal waveform.

C. SERVICE CONDITIONS:

1. Operating ambient temperature - 10 to 40 C
2. Storage temperature - 20 to 60 C
3. Relative humidity to 90 % noncondensing
4. Vibration 1 G max under 20 Hz; 0.2 G at 20 to 60 Hz.

D. STANDARD ENCLOSURE:

1. Power electronics and control electronics housed in NEMA 1 wall mount enclosure.

E. ELECTRO-MECHANICAL CONSTRUCTION:

1. Input voltage 460 volt model for nominal (+/-10%), 460 VAC systems.
2. Output current overload rating of 125% of motor FLA for 1 minute.
3. Voltage source design using PWM inverter technology.
4. Microprocessor based control circuit generating sine coded PWM output current waveform.
5. Non-volatile memory (NV RAM); all programming is maintained when disconnected from power.
6. Corrects displacement power factor to 98 % throughout the motor speed range and eliminates power line notching, through the use of diode bridge input section or power factor correction capacitors and isolation transformer.
7. Input phase insensitive, sequencing of the 3 phase input lines is not required.
8. Capable of single phase input operation - requires 50% drive derating and a three

phase motor on the output.

9. Fused DC bus with capacitive filtering.
10. Insulated Gate Bipolar Transistors (IGBT) output, allowing motor noise, at 60 Hz, less than 2 dB (@ 1 meter) above that resulting from across the line operation. The VFD manufacturer must provide output reactor to reduce noise.
11. Three current transformers detect the output current to provide: Electronic thermal overload protection, Three phase current limit, Ground fault protection, Short circuit protection and Speed search capability.
12. Surface mount technology with conformal coating provides 100,000 Hrs MTBF at the specified service conditions.
13. Digital operator keypad and display provides local control and readout functions -or- provide individual meters for readout and PLC for terminal status indication:
    a. Run / Stop / Jog commands.
    b. Speed command.
    c. Reset command.
    d. Output frequency meter and speed command meter, which can be programmed for other speed related indications including, RPM, CFM, FPM and, % max. RPM.
    e. Volt meter, Amp meter, Kilowatt meter functions.
    f. Input and output terminal status indication.
    g. Diagnostic indication.
14. Power electronics provides efficiency of 97% minimum.
15. Materials of construction UL 94-V0 rated.
16. Physical size and weight.
    a. Less than 180 cubic inches/horsepower for 5 to 75 HP drives.
    b. Less than 5 pounds/horsepower for 5 to 75 HP drives.

F. PERFORMANCE FEATURES:

1. Output frequency and voltage modulation with selectable volts/hertz ratio for optimum variable torque output.
    a. Output frequency from 0 to 400 Hz.
    b. Output voltage from 0 to motor rated voltage.
2. Fixed carrier frequency programmable up to 15 KHz, allowing motor noise, at 60 Hz, less than 2 dB (@ 1 meter) above that resulting from across the line operation -or- output reactor must be provided to reduce noise.
3. Compatible with standard NEMA B motors.
4. UL listed.
5. Lock out reverse operation.
6. Drive defaults to 80% of last speed through internal logic.
7. Soft start, linear or S-curve function.
8. Ramp to stop or coast to stop selection.
9. Provide braking through DC injection with voltage level, current limit and duration adjustable, and selectable for either stop, deceleration braking or braking before start, anti-windmill braking.
10. Critical frequency rejection capability in 3 ranges with adjustable span of 0 to 10 Hz to avoid possible vibration problems at driven equipment resonant frequencies.
11. 2 second momentary power loss ride thru (drive logic is maintained).
12. Auto restart, up to 10 attempts.
    a. Start into free running (coasting) motor via speed search feature.
13. High starting torque capability for high inertia loads.

14. Full range auto torque boost for high inertia loads.
15. Stall prevention.
16. Standard frequency reference (speed) input signals; 0-10 Vdc, 4-20 mA.
17. Accepts reverse or direct acting frequency reference input signal.
18. Programmable bias and gain for frequency reference input signal.
19. External fault input (i.e. firestat or freezestat) programmable to command ramp to stop, coast to stop, emergency stop or continue operation.
20. Speed search to start a rotating motor and load.
21. Terminals and programming for remote run/stop and speed reference.
22. Remote operation run/stop, 2 wire or 3 wire control.
23. Local/remote operation input via contact closure.
24. Analog output (0 to 10 Vdc) proportional to frequency or current.
25. Run/fault output contacts (1 amp resistive) selectively activated at initial fault occurrence or after final auto restart attempt.
26. Stall prevention by reducing output voltage and frequency during momentary overload. Automatically resume normal operation when overload clears.
27. Digital diagnostic indication and protection for:
    a. DC bus undervoltage and overvoltage.
    b. Load over torque.
    c. Fuse blown.
    d. Motor overload.
    e. Heatsink over temperature.
    f. Instantaneous over current.
    g. Operator error.
    h. Central processor fault.
    i. External fault.
    j. Dynamic braking fault.

G. ADJUSTMENTS AND PROGRAMMABILITY:

1. Incremental / Floating Point control.
    a. One contact closure input causes acceleration for duration of the closure, another causes deceleration. When both switches are open the last speed command is held.
2. Factory default settings for most common HVAC applications. These settings can be easily re-established thru a reset code.
3. Program security code.
4. 30 operational changes possible in control and display functions without stopping the drive including:
    a. Acceleration and deceleration time.
    b. Frequency command.
    c. Frequency command bias and gain.
    d. Multi-step speed references.
    e. Jog reference.
    f. Monitor display.
5. Two independent, selectable acceleration/deceleration ramp times.
6. Acceleration time from .1 to 6000 seconds.
7. Deceleration time from .1 to 6000 seconds.
8. Maximum and minimum output frequency from 0 to 400 Hz.
9. Programmable upper and lower frequency limits.
10. 15 pre-set selectable Volts/Hertz (V/Hz) patterns plus 1 custom pattern.

11. Auto speed reference (instrument follower) input signal adjustable for bias and gain.
12. Programmable start and stop ramp time.
13. Four programmable multi-function input terminals.
14. Multi-function output contacts programmable for:
    a. Run mode — Zero speed detect
    b. Overtorque detect — Coast to stop detect
    c. Run reference mode — Speed reference mode
    d. Output frequency detect — Speed synchronization
    e. Low voltage detect — Operation ready
    f. Speed reference missing — Braking resistor fault
    g. Drive fault — Firestat/freezestat.
15. Adjustable torque and current limit from 0 to 170%.
16. Ramp to stop or coast to stop selection.
17. Adjustable upper and lower frequency limits independent of pre-set V/Hz pattern.
18. Programmable lock out code, to prevent operator access to parameter settings.
19. 9 selectable pre-set speed programming capability.
20. Programmable jog speed.

2.3 COMPONENTS

A. Input section - VFD power input stage converts three phase AC line power into a fixed DC voltage via a solid state full wave diode rectifier with metal oxide varistor (MOV) protection.

B. Intermediate section - DC bus maintains a fixed DC voltage with filtering and short circuit protection as a DC supply to the VFD output section. It is interfaced with the VFD diagnostic logic circuit to continuously monitor and protect power components.

C. Output section - Insulated gate bipolar transistors (IGBT) convert DC bus voltage to variable frequency and voltage PWM sine coded output to the motor.

2.4 ACCESSORIES / OPTIONS

A. Bypass control allows operation of the motor across the line should the VFD require service:

1. Bypass and drive are factory assembled and electrically interlocked.
2. VFD can be removed with bypass control left in place.
3. NEMA 1 enclosure.
4. Door interlocked disconnect.
5. VFD input contactor.
6. VFD output contactor.
7. Bypass contactor.
8. Overload relay.
9. 115 VAC control transformer.
10. Safety circuit terminal strip.
11. Drive-Off-Line selector.
12. Power on light.
13. VFD select light.
14. Line select light.

B. Manufacturers' startup service.

C. Integral disconnect.

D. Input fusing.

E. Input interface for digital (parallel) speed reference input signal.

F. NEMA 1 enclosure.

G. Operator controls, custom, remote.

H. Serial interface.

I. Set point controller (PID).

J. Transformer, isolation.

2.5 SOURCE QUALITY CONTROL

A. Mean time between failure (MTBF) 100,000 hours minimum.

B. In-circuit testing of all printed circuit boards.

C. Printed circuit boards burned in for 96 hours at 85 C.

D. Functional testing of printed circuit boards after burn in.

E. Fully assembled VFD tested with induction motors.

F. All integrated circuits tested to .5% AQL acceptance criteria.

2.6 DRIVES SCHEDULE

A. Rated input voltage 460 VAC.

B. Variable torque horsepower 7.5 hp.

C. Maximum continuous output current 11 amps.

PART 3 - EXECUTION

3.1 INSTALLATION AND STARTUP OF EQUIPMENT

A. Per manufacturer's installation and technical manual.

B. Manufacturer's application engineering department to be accessible for consultation during startup.

END OF SECTION 230515

SECTION 230523 - VALVES

PART 1 - GENERAL

1.1 SECTION INCLUDES

A. Butterfly Valves

B. Check Valves

C. Plug Valves

D. Drain Valves

E. Gate Valves

F. Pet Cocks

G. Ball Valves

1.2 RELATED WORK

A. Section 232113 - Hydronic Piping

B. Section 232123 - Pumps

C. Section 232116 - Hydronic Specialties

1.3 SUBMITTALS

A. Submit copies of valve ordering schedule for approval prior to ordering valves.

B. Submit detailed shop drawings under provisions of individual sections. Clearly indicate make, model, type, size, and pressure ratings, and materials of construction.

1.4 APPROVAL OF PRODUCT PRIOR TO BIDDING

A. Refer to Instruction to Bidders.

PART 2 - PRODUCTS

2.1 MANUFACTURERS

A. Certain items in this Specification are listed by manufacturer and/or manufacturer's model

number to establish general style, type, character, and quality or product desired. Similar items manufactured by other than those listed will be considered, providing submittals are made according to Pre-Bid approval requirements of Instruction to Bidders.

B. Where no manufacturer or model number are given, any product meeting performance or design criteria, or referenced trade association standard may be used and Pre-Bid Approval is not required.

C. Provide valves of same manufacturer throughout wherever possible.

D. Provide valves with manufacturer's name and pressure rating clearly marked on outside of body.

2.2 VALVE CONNECTIONS

A. Provide valves suitable to connect to adjoining piping as specified for pipe joints. Use pipe size valves.

B. Thread pipe sizes 2 inches and smaller.

C. Flange pipe sizes 2-1/2 inches and larger.

D. Solder or screw to solder adapters for copper tubing.

E. Provide butterfly valve with tapped lug body when used for isolating service.

2.3 BALL VALVES

A. Ball valves 2" and smaller (heating coils) valves to be bronze body with stainless steel cartridge, threaded, combination valve and flow control. Control range 2-32 psid.

B. Manufacturer's: NIBCO T-590-Y-66 or Red & White 5092

C. Ball valves 3" and larger (chilled water) to be cast steel 150 lbs. psig flange type, ASTM A216, GR. WCB carbon steel, 416 stainless steel stem and ball, Teflon gasket, malleable iron handles.

D. Manufacturer's: NIBCO F515 or Red & White 4151

2.4 CHECK VALVES

A. Chilled Water, Hot Water:
Body: Cast iron ASTM A-48 Class 35
Seat: Bronze ASTM 145 Alloy
Disc: Bronze ASTM 145 Alloy
Spring: Stainless Steel Type 302
Bushing: 6" and smaller ASTM B-16 8" and larger ASTM 145
Set screws: Stainless Steel Type 304
Manufacturer's: NIBCO F-918-B or Red & White 435, B&G, Armstrong

2.5 BALANCING VALVES (Eccentric Plug Type)

A. Valves shall be of the non-lubricated eccentric type with resilient faced plugs and shall be furnished with end connections as shown on the plans. Flanged valves shall befaced and drilled to the ANSI 125/150 lb. standard.

B. Port areas for valves through 20" shall be minimum 80% of ull pipe area and port areas of 24" and larger valves shall be minimum 70% of full pipe area.

C. Valve bodies shall be of ASTM A126 Class B cast iron in compliance with AWWA C504 Section 2.2. Bodies in 3" and larger valves shall be furnished with a welded overlay seat of not less than 90% pure nickel in accordance with AWWA C507 Section 7.2. Valves utilizing resilient seat attached to the body shall not be acceptable. As per AWWA C504-80 Section 35.2 and AWWA C507-73 Section 7.2, sprayed or plated seats are not acceptable, nor shall screwed in seats be acceptable.

D. Valve shaft seals shall be of the multiple V-ring type and shall be externally adjustable, re-packable without removing the bonnet or actuator from the valve, and re-packable under pressure. Shaft seals shall conform to AWWA C504-80, Section 3.7 and AWWA C507-73, Section 10.2. Valves utilizing O-ring seals or non-adjustable packing shall not be acceptable. All exposed nuts, bolts, springs, washers zinc plated.

E. Valve pressure ratings shall be 175 psi through 12" and 150 psi for 14" through 48". Each valve shall be given a hydrostatic and seat test.

F. Where required, valves shall be capable of providing drip-tight shutoff up to the full rating with pressure in either direction.

G. Acceptable Manufacturers

1. Dezurik Series 100
2. Alloyco 257A
3. Nexus

2.6 DRAIN VALVES

A. Bronze gate, class 125, ASTM B-62 with bronze wedge, hose cap and safety chain.

B. Acceptable Manufacturer's

1. NIBCO T-113-HC
2. Crane 1701

2.7 PRESSURE RATINGS

A. Unless otherwise indicated, use valves suitable for 150 minimum psig WSP and 450 degrees F and maximum 200 psig and 250 degrees F.

2.8 VALVE OPERATORS

A. Provide one plug cock wrench for every ten plug cocks sized 2 inches and smaller, minimum of one. Provide each plug cock sized 2-1/2 inches and larger with a wrench, with set screw.

B. For butterfly valves (provide gear operators for sizes 8 inches and larger. For smaller sizes, provide lever lock handle with toothed plate for shut-off service and infinitely adjustable handle with lock nut and memory stop for throttling service.

C. Provide valves located more than 8 feet from floor in equipment room areas with chain operated sheaves. Extend chains to 4 feet above floor and hook to clips arranged to clear walking aisles.

D. All valves shall be furnished with valve stem extensions to facilitate insulation installation.

PART 3 - EXECUTION

3.1 INSTALLATION

A. Install valves with stems upright or horizontal, not inverted.

B. Install butterfly valves for shut-off and isolating service, to isolate equipment, part of systems, or vertical risers.

C. Provide spring-loaded check valves on discharge of condenser water chilled water, and hot water pumps.

END OF SECTION 230523

SECTION 230529 - SUPPORTS AND ANCHORS

PART 1 - GENERAL

1.1 WORK INCLUDED

A. Pipe and equipment hangers, supports, and associated anchors.

B. Equipment bases and supports.

C. Sleeves and seals.

D. Flashing and sealing equipment and pipe stacks.

1.2 RELATED WORK

A. Section 230700 - Piping and Equipment Insulation.

B. Section 232113 - Hydronic Piping.

1.3 SUBMITTALS

A. Submit shop drawings and product data under provisions of Section 013000 – Administrative Requirements.

B. Indicate hanger and support framing and attachment methods.

PART 2 - PRODUCTS

2.1 ACCEPTABLE MANUFACTURER'S

A. Fee and Mason

B. Grinnel

2.2 PIPE HANGERS AND SUPPORTS

A. Hangers for pipe sizes 1/2 to 1-1/2 inch: Malleable iron, adjustable swivel, split ring.

B. Hangers for pipe sizes 2 to 4 inches and cold pipe sizes 6 inches and over: Carbon steel, adjustable, clevis.

C. Multiple or trapeze hangers: Steel channels with welded spacers and hanger rods; cast iron roll and stand for hot pipe sizes 6 inches and over.

D. Vertical Support: Steel riser clamp.

E. Floor support for pipe sizes 4 inches and over: Welded steel bracket and wrought steel clamp; adjustable steel yoke and cast iron roller for hot pipe 6 inches and over.

F. Shields for insulated piping 2 inches and smaller: 18 gauge galvanized steel shield over insulation in 180 degree segments, minimum 12 inches long at pipe support.

G. All hangers to be sized to include insulation.

2.3 HANGER RODS

A. Steel Hanger Rods: Threaded both ends, threaded one end, or continuous threaded.

2.4 INSERTS

A. Inserts: Malleable iron case or galvanized steel shell and expander plug for threaded connection with lateral adjustment, top slot for reinforcing rods, lugs for attaching to forms, size inserts to suit threaded hanger rods.

2.5 FLASHING

A. Metal Flashing: 26 gauge galvanized steel.

B. Lead Flashing: 5 lb./sq. ft. sheet lead for waterproofing.

C. Caps: Steel, 22 gauge minimum, 16 gauge at fire resistant elements.

2.6 SLEEVES

A. Sleeves for pipes through non-fire rated floors: Form with 18 gauge galvanized steel.

B. Sleeves for pipes through non-fire rated beams, walls, footings, and potentially wet floors: Form with steel pipe or 18 gauge galvanized steel.

2.7 FABRICATION

A. Size sleeves large enough to allow for movement due to expansion and contraction. Provide for continuous insulation wrapping.

B. Design hangers without disengagement of supported pipe.

2.8 FINISH

A. Prime coat exposed steel hangers and supports.

B. Protect against galvanic action with dielectric unions for dissimilar metals.

PART 3 - EXECUTION

3.1 INSERTS

A. Provide inserts to General Contractor for placement in concrete formwork.

B. Provide inserts for suspending hangers from reinforced concrete slabs and sides of reinforced concrete beams.

C. Provide hooked rod to concrete reinforcement section for inserts carrying pipe over 4 inches.

D. Where concrete slabs form finished ceiling, provide inserts to be flush with slab surface.

E. Where inserts are omitted, drill through concrete slab from below and provide thru-bolt with recessed square steel plate and nut recessed into and grouted flush with slab.

3.2 PIPE HANGERS AND SUPPORTS

A. Support horizontal piping as follows:

PIPE SIZE DIAMETER	MAX HANGER SPACING	MIN. HANGER
1-1/2 TO 2 INCH	10' - 0"	3/8"
2-1/2 TO 3 INCH	10' - 0"	1/2"
4 to 6 inch	10' - 0"	5/8"
8 to 12 inch	10' - 0"	7/8"
14 to 20 inch	15' - 0"	1"

B. Install hangers to provide minimum 1/2 inch space between finished covering and adjacent work.

C. Place a hanger within 12 inches of each horizontal elbow.

D. Use hangers with 1-1/2 inch minimum vertical adjustment.

E. Where several pipes can be installed in parallel and at same elevation, provide multiple or trapeze hangers.

F. Support riser piping independently of connected horizontal piping.

3.3 EQUIPMENT BASES AND SUPPORTS

A. Provide equipment bases of reinforced concrete as detailed on plans.

B. Provide templates, anchor bolts, and accessories for mounting and anchoring equipment.

C. Provide rigid anchors for pipes after vibration isolation components are installed.

3.4 FLASHING

A. Provide flexible flashing and metal counterflashing where piping and ductwork penetrate weather or waterproofed walls, floors, and roofs.

END OF SECTION 230529

SECTION 230548 - VIBRATION ISOLATION

PART 1 - GENERAL

1.1 WORK INCLUDED

A. Inertia Bases

B. Vibration Isolation

1.2 RELATED WORK

A. Fire Protection System

B. Plumbing System

C. HVAC System

1.3 REFERENCES

A. ASHRAE - Guide to Average Noise Criteria Curves.

1.4 QUALITY ASSURANCE

A. Maintain ASHRAE criteria for average noise criteria curves for all equipment at full load condition.

1.5 SUBMITTALS

A. Submit shop drawings and product data under provisions of Section 013000 – Administrative Requirements.

B. Indicate vibration isolator locations, with static and dynamic load on each, on shop drawings and described on product data.

C. Submit manufacturer's installation instructions.

1.6 CERTIFICATES

A. Submit manufacturer's certificate that isolators are properly installed and properly adjusted to meet or exceed specified requirements.

PART 2 - PRODUCTS

2.1 INERTIA BASES

A. Pumps: Reinforced 3,000 psi concrete base with chamfered edges, without channel frame.

2.2 VIBRATION ISOLATORS

A. A.H. Units: Open spring mount with stiff springs. Horizontal stiffness equal to vertical stiffness. Minimum 1" deflection. No. and size of springs as per A.H. unit manufacturer's recommendations.

B. Color code spring mounts.

C. Select springs to operate at 2/3 maximum compression strain, with 1/4 inch (6 mm) ribbed neoprene pads.

PART 3 - EXECUTION

3.1 INSTALLATION

A. Install vibration isolators for motor driven equipment.

B. Set steel bases for one inch clearance between housekeeping pad and base. Set concrete inertia bases for 2 inch (50 mm) clearance. Adjust equipment level.

C. Provide spring isolators on piping connected to isolated equipment as follows: Up to 4 inch diameter, first three points of support; 5 to 8 inch diameter, first four points of support; 10 inch diameter and over, first six points of support. Static deflection of first point shall be twice deflection of isolated equipment.

END OF SECTION 230548

SECTION 230553 - MECHANICAL IDENTIFICATION

PART 1 - GENERAL

1.1 WORK INCLUDED

A. Identification of all mechanical products installed under this Division.

1.2 RELATED WORK

A. Section 099000 - Painting: Identification painting.

1.3 REFERENCES

A. ANSI/ASME A13.1 - Scheme for the Identification of Piping Systems.

1.4 SUBMITTALS

A. Submit product data under provisions of Section 013000 – Administrative Requirements.

B. Mechanical and plumbing contractors shall coordinate color codes and marking procedures.

1.5 APPROVAL OF PRODUCT PRIOR TO BIDDING

A. Refer to Instructions to Bidders, Page IB-3, Paragraph 4.3 Substitution.

PART 2 - PRODUCTS

2.1 MATERIALS

A. Color: Unless specified otherwise, conform with ANSI/ASME A13.1.

B. Plastic Nameplates: Laminated three-layer plastic with engraved black letters on light contrasting background color.

C. Metal Tags: Brass with stamped letters, tag size minimum 1-1/2 inch (38 mm) diameter with smooth edges.

D. Stencils: With clean cut symbols and letters of following size:

OUTSIDE DIAMETER OF	LENGTH OF	SIZE OF

INSULATION OF PIPE	COLOR FIELD	LETTERS
3/4" - 1-1/4"	8"	1/2"
1-1/2" - 2"	8"	3/4"
2-1/2" - 6"	12"	1-1/4"
8" - 10"	24"	2 - 1/2"
Over 10"	32"	3 - 1/2"
Ductwork & Equipment	-------	2 - 1/2"

E. Plastic Tape Pipe Markers: Flexible, vinyl film tape with pressure sensitive adhesive backing printed markings.

F. Underground Plastic Pipe Markers: Bright colored continuously printed plastic ribbon tape of not less than 6" wide by 4 mil thick manufactured for direct burial service.

PART 3 - EXECUTION

3.1 PREPARATION AND INSTALLATION:

A. Degrease and clean surfaces to receive adhesive for identification material.

3.2 INSTALLATION

A. Plastic Nameplates: Install with corrosive-resistant mechanical fasteners, or adhesive.

B. Plastic Pipe Markers: Install in accordance with manufacturer's instructions.

C. Plastic type Pipe Markers: Install complete around pipe in accordance with manufacturer's instructions.

D. Underground Plastic Pipe Markers: Install 6 to 8 inches (150 to 200 mm) below finished grade, directly above buried pipe.

E. Equipment: Identify air handling units, pumps, heat transfer equipment, tanks and water treatment devices, and motor starters with plastic nameplates. Small devices, such as in-line pumps, may identified with plastic tags.

F. Controls: Identify control panels and major control components outside panels with plastic nameplates.

G. Valves: Identify valves in main and branch piping with tags.

H. Piping: Identify piping, concealed or exposed, with plastic pipe markers. Tags may be used on small diameter piping. Identify service and flow direction. Install in clear view and align with axis of piping. Locate identification not to exceed 20 feet on straight runs including risers and drops, adjacent to each valve and "T", at each side penetration of structure or enclosure, and at each obstruction.

3.3 PAINTING

A. All surfaces requiring painting shall be left clean by the Mechanical Subcontractor. All painting shall be done by the General Contractor's painting Subcontractor. All exposed piping or insulation, convectors, grilles, or fans, in building or on roof will be painted. Paint pipe, equipment, hangers and accessories in Equipment Rooms including covering and foundations with two (2) coats of approved paint after thoroughly cleaning. Equipment having factory finish shall be touched up and given one (1) additional coat of machinery enamel color as selected. The above shall be done by the General Contractor. See Section 099000.

B. All piping in all equipment rooms shall be identified with pipe markers with directional arrows. The following color code shall be followed.

LEGEND	PIPING	DIRECTIONAL MARKER	BAND COLOR BACKGROUND
Domestic Water	Green	Green	White
Chilled Water	Blue	Green	Blue
Heating Hot Water Supply	Aluminum	Yellow	Purple
Heating Hot Water Return	Aluminum	Yellow	Orange

NOTE: On any asphalt finished surfaces, prime with one (1) coat of aluminum paint before final color.

END OF SECTION 230553

SECTION 230593 - TESTING, ADJUSTING, AND BALANCING

PART 1 - GENERAL

1.1 RELATED DOCUMENTS

A. All division 23 specification sections, drawings, and general provisions of the contract apply to work of this section, as do other documents referred to in this section.

1.2 SCOPE OF WORK

A. The Contractor shall obtain the services of an independent Test and Balance (TAB) Company which specializes in the testing and balancing of heating, ventilating and air conditioning (HVAC) systems to test, adjust and balance all HVAC systems in the building(s).

B. The work included in this section consists of furnishing labor, instruments, and tools required in testing, adjusting and balancing the HVAC systems as described in these specifications or shown on accompanying drawings. Services shall include checking equipment performance, taking the specified measurements, and recording and reporting the results. The testing, adjusting and balancing agency shall act as a reporting agency; that is, list and report each piece of equipment as to identification number, manufacturer, model number, serial number, proper location, specified performance, and report actual performance of all equipment as found during testing. The report is intended to be used during the life of the building as a ready reference indicating original conditions, equipment components, etc.

C. Representatives of the Test and Balance Company shall visit the job site during installation of the HVAC equipment, piping and ductwork as required.

D. Upon completion of the HVAC system installation, the Test and Balance Company shall perform all required testing and balancing with the full cooperation of the Contractor and his Sub-contractors. The Contractor shall make changes and/or adjustments to the HVAC system components that are required by the Test and Balance Company to accomplish proper balancing. The TAB agency shall not supply or install any materials or balancing devices such as pulleys, drives, belts, etc. All of this work is by the Contractor and shall be performed at no additional cost to the Owner.

E. The test and balance report complete with a summary page listing all deficiencies shall be submitted to the Architect for review by his Mechanical Engineer. If the Mechanical Engineer agrees with the report, he shall sign it and return it to the Architect. The test and balance report must be complete and must be accepted by the Mechanical Engineer prior to acceptance of the project. Any outstanding test and balance items shall be rectified prior to the acceptance of the project.

F. After all deficiencies have been corrected the Mechanical Engineer shall sign the testing and balancing report, and the Test and Balance Company shall supply four (4) copies of the final and complete report to the Architect for inclusion in the Operation and

Maintenance Manuals.

G. The items requiring testing, adjusting, and balancing include (but are not restricted to) the following:

HYDRONIC SYSTEMS:	AIR SYSTEMS
Pumps	Supply Fans
System Mains and Branches	Zone, Branch, & Main Ducts
	VAV System
Coils	Diffusers, registers, & grilles
Control Valves	Coils

1.3 DEFINITIONS, REFERENCES, STANDARDS

A. All work shall be in accordance with the latest edition of the Associated Air Balance Council (AABC) National Standards or the latest standards of the National Environmental Balancing Bureau (NEBB). If these contract documents set forth more stringent requirements than the AABC National Standards or the NEBB Standards, these contract documents shall prevail.

1.4 QUALIFICATIONS

A. Agency Qualifications: The TAB Agency shall be a current member of the AABC or the NEBB and must be in good standing with FP&C. A list of these firms shall be obtained from FP&C. Falsification of a TAB report shall be grounds for removal from the FP&C list and the firm's actions shall be reported to the appropriate certification agency. The contractor may use any FP&C approved TAB firm on a state project.

1.5 SUBMITTALS

A. Procedures and Agenda: The TAB agency shall submit the TAB procedures and agenda proposed to be used.

B. Sample Forms: The TAB agency shall submit sample forms, which shall include the minimum data required by the AABC National Standards or the NEBB Standards.

1.6 TAB PREPARATION AND COORDINATION

A. Shop drawings, submittal data, up-to-date revisions, change orders, fan curves, pump curves and other data required for planning, preparation, and execution of the TAB work shall be provided when available and no later than 30 days after the Designer has returned the final approved submittal data to the Contractor.

B. System installation and equipment startup shall be complete prior to the TAB agency's being notified to begin.

C. The building control system (BCS) contractor shall provide and install the control system, including all temperature, pressure and humidity sensors. These shall be calibrated for

accurate control. If applicable, the BCS contractor shall install all necessary computers and computer programs, and make these operational. Assistance shall be provided as required for reprogramming, coordination, and problem resolution.

D. All test points, balancing devices, identification tags, etc., shall be accessible and clear of insulation and other obstructions that would impede TAB procedures.

E. Qualified installation or startup personnel shall be readily available for the operation and adjustment of the systems. Assistance shall be provided as required for coordination and problem resolution.

1.7 REPORTS

A. Final TAB Report - The TAB agency shall submit the final TAB report for review by the Architect. On plans provided, all outlets, devices, HVAC equipment, etc., shall be identified (including manufacturer, model number, serial number, motor manufacturer, HP, drive type, fan and motor sheaves and belt number), along with a numbering system corresponding to report unit identification. The TAB agency shall submit an AABC "National Project Performance Guaranty" (or similar NEBB Guaranty) assuring that the project systems were tested, adjusted and balanced in accordance with the project specifications and AABC National Standards (or similar NEBB Standards). The Designer shall certify his approval on the Performance Guaranty.

B. Submit 4 copies of the Final TAB Report to the Architect for inclusion in the Operation and Maintenance Manuals.

PART 2 - INSTRUMENTATION

A. All instruments used for measurements shall be accurate and calibrated. Calibration and maintenance of all instruments shall be in accordance with the requirements of AABC National Standards (or similar NEBB Standards).

PART 3 - EXECUTION

3.1 GENERAL

A. The specified systems shall be reviewed and inspected for conformance to design documents. Testing, adjusting and balancing on each identified system shall be performed. The accuracy of measurements shall be in accordance with AABC National Standards (or similar NEBB Standards). Adjustment tolerances shall be + or - 10% unless otherwise stated.

B. Equipment settings, including manual damper quadrant positions, valve indicators, fan speed control levers, and similar controls and devices shall be marked to show final settings.

C. All information necessary to complete a proper TAB project and report shall be per AABC or NEBB standards unless otherwise noted. The descriptions of work required, as listed in this

section, are a guide to the minimum information needed.

D. TAB contractor shall cut insulation, ductwork and piping for installation of test probes to the minimum extent necessary to allow adequate performance of procedures. Upon completion, patch insulation, ductwork and housings using materials identical to those removed. Seal insulation to reestablish integrity of the vapor barrier.

E. TAB work shall include additional inspection and adjustment of components during the season following the initial balance to include re-balance of any items influenced by seasonal changes or as directed by the Owner.

3.2 AIR SYSTEMS

A. The TAB agency shall verify that all ductwork, splitters, extractors, dampers, grilles, registers, and diffusers have been installed per design, are functional and set full open. Any leakage in the ductwork shall be repaired prior to the test. The TAB agency shall perform the following TAB procedures in accordance with the AABC National Standards or NEBB Standards:

For supply fans:

1. Fan speeds - Test and adjust fan RPM to achieve design CFM requirements.
2. Current and Voltage - Test and record motor voltage and amperage, and compare data with the nameplate limits to ensure fan motor is not in or above the service factor.
3. Pitot-Tube Traverse - Perform a Pitot-tube traverse of main supply and return ducts, as applicable to obtain total CFM. If a Pitot-tube traverse is not practical, an explanation of why a traverse was not made must appear on the appropriate data sheet.
4. Outside Air - Test and adjust the outside air on applicable equipment using a Pitot-tube traverse. If a traverse is not practical, an explanation of why a traverse was not made must appear on the appropriate data sheet. If a traverse is not practical use the mixed-air temperature method if the inside and outside temperature difference is at least 20 degrees Fahrenheit or use the difference between Pitot-tube traverses of the supply and return air ducts.
5. Static Pressure - Test and record system static pressure, including the static pressure profile of each supply fan.

For exhaust fans:

1. Fan speeds - test and adjust fan RPM to achieve design CFM requirements.
2. Current and Voltage - Test and record motor voltage and amperage, and compare data with the nameplate limits to ensure motor is not in or above the service factor.
3. Pitot-Tube Traverse - Perform a Pitot-tube traverse of main exhaust ducts to obtain total CFM. If a Pitot-tube traverse is not practical, an explanation of why a traverse was not made must appear on the appropriate data sheet.
4. Static Pressure - Test and record system static pressure, including the static pressure profile of each exhaust fan.

For zone, branch and main ducts:

1. Adjust ducts to within design CFM requirements. As applicable, at least one zone balancing damper shall be completely open. Multi-diffuser branch ducts shall have

at least one outlet or inlet volume damper completely open.

For VAV systems:

1. Identify the type, location, and size of each terminal box. This information shall be recorded on terminal box data sheets.
2. Test, adjust and record the maximum and minimum box air quantities for each VAV box.
3. Set volume regulators on all terminal boxes to meet design maximum and minimum CFM requirements.
4. Test and record entering and leaving air temperature of hot water coils with full heating air flow and water flow.
5. Insure the entering static pressure is sufficient for normal, proper box operation.

For diffusers, registers and grilles:

1. Tolerances - Test, adjust, and balance each diffuser, grille, and register to within 10% of design requirements. Minimize drafts. Include required CFM, initial test CFM and final CFM.
2. Identification - Identify the type, location, and size of each grille, diffuser, and register. This information shall be recorded on air outlet data sheets.

For coils:

1. Air Temperature - Once air flows are set to acceptable limits, take wet bulb and dry bulb air temperatures on the entering and leaving side of each cooling coil. Dry-bulb temperature shall be taken on the entering and leaving side of each heating coil.

3.3 HYDRONIC SYSTEMS

A. The TAB agency shall, as applicable, verify that all hydronic equipment, piping, and coils have been filled and purged; that strainers have been cleaned; and that all balancing valves (except bypass valves) are set full open. Examine water in system and determine if it has been treated and cleaned. As applicable, it shall check air vents and expansion or compression tank for proper operation. The TAB agency shall perform the following testing and balancing functions in accordance with the AABC National Standards (or similar NEBB Standards):

For pumps:

1. Test and adjust, hot water, pump to meet design GPM requirements. Check pump rotation and verify impeller size. Check pumps for proper operation. Pumps shall be free of vibration and cavitation. Record appropriate gauge readings for final TDH and Block-Off/Dead head calculations. List pump N.P.S.H. (as applies).
2. Current and Voltage - Test and record motor voltage and amperage, and compare data with the nameplate limits to ensure pump motor is not in or above the service factor.

For system mains and branches:

1. Adjust water flow in pipes to within design GPM requirements. As applicable, at least one branch balancing valve shall be completely open.

For coils:

1. Tolerances - Test, adjust, and balance all chilled-water and hot-water coils within

10% of design requirements.

2. Verification - Verify the type, location, final pressure drop and GPM of each coil. This information shall be recorded on coil data sheets.

For control valves:

1. Check operation of automatic valves.
2. Test and record pressure drop and flow across control valves at full flow.

3.4 PROCEDURES FOR CHILLERS

A. Balance water flow through each evaporator to within specified tolerances of indicated flow with all pumps operating. With only one chiller operating in a multiple chiller installation, do not exceed the flow for the maximum tube velocity recommended by the chiller manufacturer. Measure and record the following data with each chiller operating at design conditions:

1. Evaporator-water entering and leaving temperatures, pressure drop, and water flow.
2. If water-cooled chillers, condenser-water entering and leaving temperatures, pressure drop, and water flow.
3. Evaporator and condenser refrigerant temperatures and pressures, using instruments furnished by chiller manufacturer.
4. Power factor if factory-installed instrumentation is furnished for measuring kilowatt.
5. Kilowatt input if factory-installed instrumentation is furnished for measuring kilowatt.
6. Capacity: Calculate in tons of cooling.

3.6 ADDITIONAL TAB SERVICES

A. Job Site Inspections: During construction, the TAB agency shall inspect the installation of pipe systems, sheet metal work, temperature controls, and other component parts of the HVAC systems as required.

B. Verification of HVAC Controls: The TAB agency shall be assisted by the building control systems Contractor in verifying the operation and calibration of all HVAC and temperature control systems. The following tests shall be conducted:

1. Verify that all control components are installed in accordance with project requirements and are functional, including all electrical interlocks, damper sequences, air and water resets, fire and freeze stats, and other safety devices.
2. Verify that all controlling instruments are calibrated and set for design operating conditions.

C. Temperature Testing: To verify system control and operation, a series of three temperature tests shall be taken at approximately two hour intervals in each separately controlled zone. The resulting temperatures shall not vary more than two degrees Fahrenheit from the thermostat or control set point during the tests. Outside temperature and humidity shall also be recorded during the testing periods.

D. TAB Report Verification: At the time of final inspection, the TAB agency may be required to recheck, in the presence of the owner's representative, specific and random selections of data, air quantities, and air motion recorded in the certified report. Points and areas for

recheck shall be selected by the owner's representative. Measurements and test procedures shall be the same as approved for the initial work for the certified report. Selections for recheck, specific plus random, will not exceed 10% of the total number tabulated in the report.

END OF SECTION 230593

SECTION 230700 - PIPING AND EQUIPMENT INSULATION

PART 1 - GENERAL

1.1 WORK INCLUDED

A. Piping Insulation

B. Jackets and Accessories

C. Equipment Insulation

D. Duct Insulation

1.2 RELATED WORK

A. Section 233100 - Ductwork

1.3 REFERENCES

A. ANSI/ASTM C547 - Mineral Fiber Preformed Pipe Insulation

B. ANSI/ASTM C552 - Cellular Glass Block and Pipe Thermal Insulation.

C. ASTM B209 - Aluminum and Aluminum Alloy Sheet and Plate

D. ASTM E845 - Surface Burning Characteristics of Building Materials.

E. NFPA 255 - Surface Burning Characteristics of Building Materials.

F. UL 723 - Surface Burning Characteristics of Building Materials.

1.4 QUALITY ASSURANCE

A. Applicator: Company specializing in application of piping insulation.

B. Materials: Flame spread/fuel contributed/smoke developed rating of 25/50/50 in accordance with ASTM E84, NFPA 255.0, UL 723.

1.5 SUBMITTALS

A. Submit product data for each application as per Section 01 30 00– Administrative Requirements.

B. Submit manufacturer's installation instructions.

PART 2 - PRODUCTS

2.1 INSULATION

A. After all work has been tested and found to be leak free and tight, and accepted by the Architect, insulate as follows:

1. All chilled water, supply and return, piping above ground shall be covered with 2" thick molded cellular foam, foamglas or cell-u-glass type sectional pipe covering to be complete with F.R.J. jacket, with the exception of hot water run-outs - see item No. 2. Sections of covering shall be joined together, the mastic to be buttered on only one of the two adjoining surfaces at both the longitudinal and circumferential joints so that a complete seal at the joints is obtained. The piping insulation is to be secured in place with copper wire spaced not more than 12" on center.
2. All heating water, supply and return, piping above ground shall be covered with 1-½" thick molded cellular foam, foamglas or cell-u-glass type sectional pipe covering to be complete with F.R.J. jacket, with the exception of hot water run-outs – see item No. 2. Sections of covering shall be joined together, the mastic to be buttered on only one of the two adjoining surfaces at both the longitudinal and circumferential joints so that a complete seal at the joints is obtained. The piping insulation is to be secured in place with copper wire spaced not more than 12" on center.
3. All domestic hot and cold piping above ground shall be covered with 1" thick fiberglass, molded type sectional pipe covering complete with FRJ jacket. Sections of pipe covering shall be joined together, the mastic to be buttered on only one of the two adjoining surfaces at both the Longitudinal and circumferential joints so that a complete seal at the joints is obtained. The piping insulation will be secured in place with copper wire spaced not more than 12 on center. All domestic water piping insulation shall be continuous. Contractor shall not cut insulation to fit around structural items. No exceptions.
4. Insulate the square to round connections on each air handling unit with 3" thick 3/4 lb. density insulation board using stick pins randomly spaced 18" apart. Insulation board shall have aluminum vapor barrier.
5. Fittings, flanges, valves, etc., shall be covered with molded or fabricate covers of same material as pipe covering and shall be finished with two (2) coats of white vapor barrier mastic reinforced with 20-20 mesh glass fabric.
6. Insulate all VAV boxes, rectangular supply, return, exhaust, and fresh air ducts with 3" thick 3/4 lb. density fiberglass insulation with reinforced aluminum vapor barrier. Seal all joints with duct tape.
7. All round and flat oval supply air ducts shall be wrapped with 3" thick, 3/4 lb. density fiberglass insulation with reinforced aluminum vapor barrier. Seal all joints with 2" duct tape.
8. Insulate cooling coil condensate drain lines from air handling units with 1/2" thick aerotube type insulation tied on and sealed over with tape.
9. Insulate back of all ceiling diffusers with 3" thick fiberglass with reinforced aluminum vapor barrier.
10. All chilled heating and water valves, and hot water pumps shall be insulated with a factory fabricated removable cover. Cover shall be fabricated of 1" close cell elastomeric insulation complete with Velcro closures.
11. Insulate all horizontal roof drains with 2" thick ¾ lb. density fiberglass insulation with reinforced aluminum vapor barrier. Seal all joints with duct tape.

12. All outdoor mechanical piping shall be covered with aluminum jacket, water tight.
13. Insulate all PVC piping located in a return air plenum with 2" thick ¾ lb. density fiberglass insulation with reinforced aluminum vapor barrier. Seal all joints with duct tape.
14. All hydronic piping in mechanical room and any interior exposed piping shall have color coded PVC jacket watertight. Color to be coordinated with Engineer.

PART 3 - EXECUTION

3.1 PREPARATION

A. Install materials in accordance with manufacturer's instructions.

3.2 INSTALLATION

A. Install materials in accordance with manufacturer's instructions.

B. Continue insulation with vapor barrier through penetrations.

C. On insulated piping with vapor barrier, insulate fittings, valves, unions, flanges, strainers, flexible connections, and expansion joints.

D. Neatly finish insulation at supports, protrusions, and interruptions.

END OF SECTION 230700

SECTION 230900 - BUILDING TEMPERATURE CONTROL SYSTEM

PART 1 - GENERAL

1.1 WORK INCLUDED

A. Furnish a totally native BACnet-based system. The system shall integrate with the Alerton Compass BAS workstation, located on the Southern University Baton Rouge Server. Coordinate with SUBR IT for IT connection to system. All building pumping systems that are fed from the SU central plant shall interface with central plant control system for complete energy optimization. See sequence of operations for details. The operator's workstation, all building controllers, application controllers, and all input/output devices shall communicate using the protocols and network standards as defined by ANSI/ASHRAE Standard 135–2008, BACnet. In other words, all workstations and controllers, including unitary controllers, shall be native BACnet devices. No gateways shall be used for communication to controllers installed under this section.

B. Provide a BAS contract is responsible for performing monthly backups of system, including firmware and DDC in field controllers, through duration of warranty. This function shall be performed through Compass and saved on server. Contractor shall also maintain a copy.

C. Provide necessary BACnet-compliant hardware and software to meet the system's functional specifications. Provide Protocol Implementation Conformance Statement (PICS) for Windows-based control software and every controller in system, including terminal device or unitary controllers and space temperature sensors.

D. Gateways may be used for communication to new and existing boilers, chillers, or large self-contained Air Handlers installed under other sections. However, the Gateways shall be provided by Alerton or developed specifically for equipment provided. Third-party and private labeled third-party gateways are not allowed.

E. The existing Operator's workstation's hardware and software shall be utilized; no new software shall be installed on the existing client's machine to perform full system operation. All field level controllers shall be capable of being programmed from Ascent Compass software.

F. Prepare individual hardware layouts, interconnection drawings, and software configuration from project design data.

G. Implement the detailed design for all analog and binary objects, system databases, graphic displays, logs, and management reports based on control descriptions, logic drawings, configuration data, and bid documents.

H. Design, provide, and install all equipment cabinets, panels, data communication network cables needed, and all associated hardware.

I. Provide and install all interconnecting cables between supplied cabinets, application controllers, and input/output devices.

J. Provide and install all interconnecting cables between all operator's terminals and peripheral devices (such as printers, etc.) supplied under this section.

K. Provide complete manufacturer's specifications for all items that are supplied. Include vendor name of every item supplied.

L. Provide supervisory specialists and technicians at the job site to assist in all phases of system installation, startup, and commissioning.

M. Provide a comprehensive operator and technician training program as described herein. The installing contractor shall have at least 5 ACE certified engineers on staff at all times.

N. Provide as-built documentation, operator's terminal software, diagrams, and all other associated project operational documentation (such as technical manuals) on approved media, the sum total of which accurately represents the final system.

O. Provide new sensors, dampers, valves, and install only new electronic actuators. No used components shall be used as any part or piece of installed system unless otherwise noted.

1.2 SYSTEM DESCRIPTION

A. A distributed logic control system complete with all software and hardware functions shall be provided and installed. System shall be completely based on ANSI/ASHRAE Standard 135-2008, BACnet. This system is to control all mechanical equipment, including all unitary equipment such as VAV boxes, heat pumps, fan-coils, AC units, etc. and all air handlers, boilers, chillers, and any other listed equipment using native BACnet-compliant components.

B. The entire control system shall be in complete compliance with the BACnet standard: ANSI/ASHRAE 135-2008 with a BTL listing. The system shall use BACnet protocols and LAN types throughout and exclusively. Non-BACnet-compliant or proprietary equipment or systems (including gateways) shall not be acceptable and are specifically prohibited.

C. The existing Operator's workstation hardware and software shall be utilized; no new software shall be installed on the existing client's machine to perform full system operation.

D. Building controllers shall include complete energy management software, including scheduling building control strategies and logging routines. All energy management software and firmware shall be resident in field hardware and shall not be dependent on the operator's terminal. Operator's terminal software is to be used for access to field-based energy management functions only. Provide zone-by-zone direct digital logic control of space temperature, scheduling, runtime accumulation, equipment alarm reporting, and override timers for after-hours usage.

E. Controls shall conform to the Southern University System building naming convention and Facility code standard. The BACnet Broadcast Management Device (BBMD) shall be coordinated with Southern University's IT in order to conform with existing Ascent Compass server.

1. Campus and Facility Codes shall be coordinated with all of Southern University's campuses located throughout the State of Louisiana. Duplications of BACnet devices and network numbers will negatively impact the performance of the centralized BAS system.

F. When specified in the construction documents, room sensors shall be provided with digital readout that allow the user to view room temperature, view outside air temperature, adjust the room setpoint within preset limits and set desired override time. User shall also be able to start and stop unit from the digital sensor. Include all necessary wiring and firmware such that room sensor includes field service mode.

1.3 QUALITY ASSURANCE

A. The Energy Management Control System (EMCS) shall be designed, installed, commissioned, and serviced by manufacturer authorized and trained personnel. System provider shall have a local in-place support facility site with technical staff, spare parts inventory, and necessary test and diagnostic equipment.

B. The Bidder shall be regularly engaged in the design, installation and maintenance of BAS systems and shall have demonstrated technical expertise and experience in the design, installation and maintenance of BAS systems similar in size and complexity to this project.

C. A single EMCS Contractor shall be used on the project. The EMCS Contractor shall furnish and install all controllers, sensors, etc. unless factory affixed to the Mechanical Equipment.

D. All Control Valves shall be provided by the Controls Contractor with control wiring by the EMCS Contractor and installation of the valve by Mechanical. Electrical Wiring (if applicable) shall be by properly licensed contractor.

E. Responsibility: The EMCS Contractor shall be responsible for inspection and Quality Assurance (QA) for all materials and workmanship furnished. The EMCS Contractor shall work with the Mechanical Equipment Startup Technician to furnish integration configuration information such as Devices Instance, Mac Address, Baud Rate, etc.

F. All engineering and drawings required for developing the EMCS and the related project submittal and installation packages shall be produced by the manufacturer or the EMCS Integrator.

G. Component Testing: Maximum reliability shall be achieved through extensive use of high-quality, pre-tested components. Each and every controller, sensor, and all other DDC components shall be individually tested by the manufacturer prior to shipment.

H. Tools, Testing and Calibration Equipment: The EMCS supplier shall provide all tools, testing, and calibration equipment necessary to ensure reliability and accuracy of the system.

I. Conduct a Point to Point Testing of Graphics, Input/Outputs of Controllers and end devices in the presence of the Owner. Provide Commissioning Sheets for every point tested in the Final O&M Submittals.

J. The systems control contractor shall be the authorized installing contractor for the

manufacturer of the BACnet components.

1. The System Control Contractor must have, at minimum, five (5) factory certified and trained technicians on staff during installation, startup, and commissioning of the EMCS

K. Materials and equipment shall be manufacturer's latest standard design that complies with the specification requirements.

L. All BAS peer-to-peer network controllers, central system controllers and local user displays shall be UL Listed under Standard UL 916, category PAZX.

M. All electronic equipment shall conform to the requirements of FCC Regulation, Part 15, Governing Radio Frequency Electromagnetic Interference and be so labeled.

N. Control system shall be engineered, programmed and supported completely by representative's local office that must be within 70 miles of project site.

1.4 REFERENCE STANDARDS

A. The latest edition of the following standards and codes in effect and amended as of the bid date of this project and any applicable subsections thereof , shall govern design and selection of equipment and material supplied:

1. American Society of Heating, Refrigerating and Air Conditioning Engineers (ASHRAE).
2. ANSI/ASHRAE Standard 135-2008, BACnet.
3. Uniform Building Code (UBC), including local amendments.
4. UL 916 Underwriters Laboratories Standard for Energy Management Equipment. Canada and the US.
5. National Electrical Code (NEC).
6. FCC Part 15, Subpart J, Class A
7. EMC Directive 89/336/EEC (European CE Mark)
8. UL-864 UUKL listing for Smoke Controls for any equipment used in smoke control sequences.

B. City, county, state, and federal regulations and codes in effect as of contract date.

C. Except as otherwise indicated the system supplier shall secure and pay for all permits, inspections, and certifications required for his work and arrange for necessary approvals by the governing authorities.

1.5 SUBMITTALS

A. Drawings:

1. The system supplier shall submit engineered drawings, control sequence, and bill of materials for approval.
2. Drawings shall be submitted in the following standard sizes: 11" x 17" (ANSI B).
3. Eight complete sets (copies) of submittal drawings shall be provided.

4. One Set of Digital Drawings in PDF/Autocad format shall be provided on CD-ROM.

B. System Documentation – Include the following in submittal package:

1. System configuration diagrams in simplified block format.
2. All input/output object listings and an alarm point summary listing.
3. Electrical drawings that show all system internal and external connection points, terminal block layouts, and terminal identification.
4. Complete bill of materials, valve schedule and damper schedule.
5. Manufacturer's instructions and drawings for installation, maintenance, and operation of all purchased items.
6. Overall system operation and maintenance instructions—including preventive maintenance and troubleshooting instructions.
7. For all system elements—operator's workstation(s), building controller(s), application controllers, routers, and repeaters,—provide BACnet Protocol Implementation Conformance Statements (PICS) as per ANSI/ASHRAE Standard 135-2008.
8. Provide complete description and documentation of any proprietary (non-BACnet) services and/or objects used in the system for Owner approval. Documentation shall include a list integration points.
9. A list of all functions available and a sample of function block programming that shall be part of delivered system.
10. Provide a flash drive with a copy of all programming files including DDC and Visio Drawings.

C. Scheduling (Design, Engineering, Installation, Commissioning)

1. The vendor shall provide a detailed project design and installation schedule with time markings and details for hardware items and software development phases. Schedule shall show all the target dates for transmission of project information and documents and shall indicate timing and dates for system installation, debugging, and commissioning.

1.6 WARRANTY

A. Warranty shall cover all costs for parts, labor, associated travel, and expenses for a period of one year from completion of system acceptance.

B. Warranty shall be extended and shall cover all costs for parts, labor, associated travel, and expenses for a period of one year from the date of replacement of any items replaced under this warranty.

C. Hardware and software personnel supporting this warranty agreement shall provide on-site or off-site service in a timely manner after failure notification to the vendor. The maximum acceptable response time to provide this service at the site shall be 24 hours Monday through Friday, 48 hours on Saturday and Sunday.

D. Warranty support services shall be provide on-site by the BAS's INSTALLING (sub)contractor for the entire duration of all trouble shooting and all warranty repair services related to both installation and hardware/software issues for the full warranty period of all devices at no additional cost to Owner.

E. This warranty shall apply equally to both hardware and software.

1.7 RELATED WORK IN OTHER SECTIONS

A. Refer to Instructions to Bidders, Division 0 and Division 1, if included, for related contractual requirements.

B. Refer to Division 23, Heating, Ventilation and Air Conditions

1. Installation of control valves by Mechanical Contractor
2. Installation of Dampers or Air Flow Monitors or other Duct Related Devices shall be provided by the Sheet metal Contractor.
3. Installation of sensor wells, pressure temperature sensors in piping, differential pressure sensors, flow meters, flow switches or other immersion type devices by Mechanical Contractor.
4. Integrated Equipment:

    a. VFD provided by the Mechanical Contractor shall have a BACnet protocol for integration of any/all points requested by this division.
    b. Any EMCS provided shall be integrated in the existing Compass system by local Alerton office.

C. Refer to Division 26 Electrical

1. All power wiring to control panel to be supplied by Division 26
2. All power wiring to VAV, FCU or any other terminal unit to power the controls shall be provided by Division 26.
3. All 120 VAC wiring to be provided by Division 26.
4. All actuated valves with separate power source shall have a local disconnect switch mounted within 5 feet and line of site of the actuator.
5. Smoke Detectors for Air Moving Devices, supply and return by HVAC equipment manufacturer.
6. VFD provided by the Electrical Contractor shall have a native on-board BACnet protocol for integration of any/all points requested by this division. Notify Owner's Representative in writing immediately upon discovery of any VFD that does not meet this requirement.

D. Refer to Division 28 Electronic Safety and Security

1. Fire Alarm System by Division 28.

PART 2 - PRODUCTS

2.1 MANUFACTURERS

A. Acceptable Manufacturer: Ascent Compass by Alerton

B. The following EMCS components are considered proprietary and a closed specification (in accordance with R.S. 38:2291) and no substitutions shall be allowed:

1. VAV-SD-E (125)
2. MS4-TH (127)
3. VIP-363-HOA (8)
4. VXIO-965-HOA (11)
5. ACM (1)
6. ACM-256 (1)
7. ACM-OC-2X485 (1)
8. VLC-444 (1)
9. FLG-MODBUS (1)
10. Alerton Engineering, Graphics, Startup, Technician (1)

C. Refer to Unit Price Form in project manual. Contractor shall use lump sum as noted when submitting their bid and shall be part of the Base Bid. The unit cost does not include labor costs for the system installation and the contractor shall be responsible in accounting for associated labor costs and include them in the Base Bid. Unit price form does not include costs associated to items that are not a part of the closed specification

D. Alerton Contact is:
Jaeden Wallace
Synergy Building Solutions
337-412-0807
Jaeden.Wallace@Synergybldgsolutions.com

E. Advanced Workstation (AWS)

1. General structure of workstation interaction shall be a standard client/server relationship with web server embedded in the server for browser only access. Server shall be used` to archive data and store system database. The Operator's Advanced Workstation in the District's Data Center maintained by Technology and Maintenance Departments shall be utilized without installation of any additional Integration / Management Software. The AWS shall support operation in a virtualized server environment. Thick and web clients shall access server for all archived data.

    a. A single server license shall:

        1) Allow a minimum of 50 thick client seats/installations.
        2) Allow a minimum of 200 web client users.
        3) Not restrict system size based on point count (BACnet or Integration).

F. Data Displays

1. Data displays shall render all data associated with project as called out on drawings and/or object type list supplied. Graphic files shall be created using digital, full color photographs of system installation, AutoCAD or Visio drawing files of field installation drawings, and wiring diagrams from as-built drawings.
2. Data displays shall render data using iconic graphic representations of all mechanical equipment. System shall be capable of displaying graphic file, text, trendlog, and dynamic object data together on each display and shall include animation. Information shall be labeled with descriptors and shall be shown with the appropriate engineering units. All information on any display shall be

dynamically updated without any action by the user.

3. Data display frame shall allow user to change all field-resident AWS functions associated with the project, such as setpoints, weekly schedules, exception schedules, etc., from any screen, no matter if that screen shows all text or a complete graphic display. This shall be done without any reference to object addresses or other numeric/mnemonic indications.
4. Analog objects shall be displayed with operator modifiable units. Analog input objects may also be displayed as individual graphic items on the display screen as an overlay to the system graphic.
5. All displays and programming shall be generated and customized by the local use energy management and control system (EMCS) supplier and installer. Systems requiring factory development of graphics or programming of DDC logic are specifically prohibited.
6. AWS shall be supplied with a library of standard graphics, which may be used unaltered or modified by the operator. AWS shall include a library of equipment graphic components to assemble custom graphics. Systems that do not allow customization or creation of new graphic objects by the operator (or with third-party software) shall not be allowed.
7. A navigation tree for building, equipment and system diagnostic centric display organization shall be available from data display view. The tree navigation contents shall be customizable on a per-user and per-group basis.
8. Each display may be protected from viewing unless operator credentials have the appropriate access level. An access level may be assigned to each display and system object. The menu label shall not appear on the graphic if the operator does not have the appropriate security level.
9. Data displays shall have the ability to link to content outside of the EMCS system. Such content shall include, but is not limited to launching external files in their native applications (for example, a Microsoft Word document).
10. A single system software license can support a minimum of 200 user accounts and web access. Data displays shall support:

    a. Graphic items with custom geometry that offer both color gradient shading and variable opacity in scale to system variables, both analog and digital, and color range settings. For example, rooms on a floor plan graphic can be made to indicate the space temperature by varying the color of that room.
    b. Clear and custom geometry navigation buttons to provide intuitive navigation to system display or external URLs.
    c. Graphic files in JPG, PNG, and GIF file types.
    d. Viewing of up to 1,024 system data points (Analog, Binary, and/or Multi-state) in a single screen.
    e. Customizable mouse-over tooltip information of graphic items or data points can be displayed. The tooltips can be turned on and off. The default setting is off.
    f. Right click capability to directly access system functionality, such as Schedule, Trendlogs, and Alarms associated with a display object selected.
    g. Automatic zooming to the screen size detected to maximize the size of the display to match screen display area available. The zoom capability can be enabled or disabled, default is enabled. The background color, if solid, will be used to flood fill the remaining screen background.
    h. Supports user configurable embedded Data Viewer for a persistent trend log data view to accompany system data and graphic information on a single

display.

G. Password Protection

1. Provide security system that prevents unauthorized use unless operator is logged on. Access shall be limited to operator's assigned functions when user is logged on. This includes displays as outlined above.
2. AWS shall provide security for a minimum of 200 users. Each user shall have an individual User ID, User Name, and Password. Entries are alphanumeric characters only and are case sensitive (except for User ID). User ID, User Name, and Password shall be shall support a minimum of 40 characters. All user information and passwords shall be stored in an encrypted form.
3. Each user shall be allowed individual assignment of only those control functions, menu items, navigation tree, and user-specific system start display, as well as restricted access to discrete BACnet devices to which that user requires access.
4. All passwords, user names, and access assignments shall be adjustable via Server and Thick client. Password shall be adjustable via the web client.
5. Users shall also have a set access level, which defines access to displays and individual objects the user may control. System shall include 10 separate and distinct access levels for assignment to users.
6. The AWS and Thick Client shall include an Auto Logout feature that shall automatically logout user when there has been no keyboard or mouse activity for a set period of time. Time period shall be adjustable by system administrator. Auto Logout may be enabled and disabled by system administrator. Operator terminal shall display message on screen that user is logged out after Auto Logout occurs.
7. The system shall permit the assignment of an effective date range, as well as an effective time of day, that the User IDs are permitted to authenticate.

H. Operator Activity Log

1. An Operator Activity Log that tracks all operator changes and activities shall be included with AWS. System shall track what is changed in the system, who performed this change, date and time of system activity, and value of the change before and after operator activity. Operator shall be able to display all activity, sort the changes by user and also by operation. Operator shall be able to print the Operator Activity Log display.
2. Log shall be gathered and archived to a hard drive on AWS as needed. Operator shall be able to export data for display and sorting in a spreadsheet.
3. System shall have the option to require user comment recording in the Operator Activity Log upon any system point change.
4. Operator Activity log shall be accessible via the Web Client for viewing, sorting, filtering, and Printing.

I. Scheduling

1. AWS, Thick Client and Web Client shall show all information in easy-to-read daily format including calendar of this month and next. All schedules shall show actual ON/OFF times for day based on scheduling priority. Priority for scheduling shall be events, holidays and daily, with events being the highest.

2. Holiday and special event schedules shall display data in calendar format. Operator shall be able to schedule holidays and special events directly from these calendars.
3. Operator shall be able to change all information for a given weekly or exception schedule if logged on with the appropriate access privileges.
4. AWS and Thick Client shall include a Schedule Wizard for set up of schedules. Wizard shall walk user through all steps necessary for schedule generation. Wizard shall have its own pull-down selection for startup or may be started by right-clicking on value displayed on graphic and then selecting Schedule.
5. Scheduling shall include optimum start based on outside air temperature, current heating/cooling setpoints, indoor temperature and history of previous starts. Each and every individual zone shall have optimum start time independently calculated based on all parameters listed. User shall input schedules to set time that occupied setpoint is to be attained. Optimum start feature shall calculate the startup time needed to match zone temperature to setpoint. User shall be able to set a limit for the maximum startup time allowed.
6. Schedule list shall show all schedules currently defined. This list shall include all standard, holiday and event schedules. In addition, user shall be able to select a list that shows all scheduled points and zones.
7. Display of all three schedules must show all ON times for standard, holiday and event schedules in different colors on a given day. In addition, OFF times for each must also be shown in additional colors. User shall be able to select from standard calendar what days are to be scheduled and same display shall show all points and zones affected. User shall be able to set time for one day and select all days of the week that shall be affected as a recurrence of that same schedule for that given day.
8. Any displayed data that is changeable by the operator may be selected using the right mouse button and the schedule shall then be selectable on the screen. Selection of the schedule using this method shall allow the viewing of the assigned schedule allow the point to be scheduled.
9. Schedule editor shall support drag-n-drop events and holidays onto the schedule calendar.
10. Schedule editor shall support drag-n-drop events default to a two-hour period, which can then be adjusted by the user.
11. Schedule editor shall support drag-n-drop holidays default for OFF all day and can be edited for multiple-day holidays.
12. Schedule editor shall support the view of affected zones when adding or editing timed events of a schedule.
13. The web client shall have the ability to search a list of all scheduled points and zones to access the schedule calendar.
14. Schedule time blocks shall present schedule detail via mouse-over information.

J. Alarm Indication and Handling

1. AWS shall provide visual, printed, and email means of alarm indication. Printout of alarms shall be sent to the assigned terminal and port. Alarm notification can be filtered based on the User ID's authorization level.
2. Web client shall display a persistent alarm state for the system regardless of the data view including points in alarm but not acknowledged, and points

that have gone into alarm and returned to normal without being acknowledged.

3. Alarm History shall provide log of alarm messages. Alarm log shall be archived to the hard disk of the AWS. Each entry shall include a description of the event-initiating object generating the alarm. Description shall be an alarm message of at least 256 characters in length. Entry shall include time and date of alarm occurrence, time and date of object state return to normal, time and date of alarm acknowledgment, and identification of operator acknowledging alarm.
4. Alarm messages shall be in user-definable text (English or other specified language) and shall be delivered either to the operator's terminal, client or through remote communication using email (Authenticated SMTP supported).
5. AWS, Thick Client, and Web Client shall allow for set up of alarms. UI shall walk user through all steps necessary for alarm generation. Alarm creation may be started by right-clicking on value displayed on graphic and then selecting Alarm setup.
6. Web client shall support color-coded indication of current alarms as follows:

    a. Red indicator shows number of active alarms that have not been acknowledged.
    b. Yellow indicator shows number of alarms that are still active but have been acknowledged.
    c. Blue indicator shows number of alarms that have returned to normal but have not been acknowledged.
    d. Color-coded indicators, when selected by the user, navigate to a pre-filtered view of alarm history.
    e. Alarm history can be filtered by color-coded indicator states.

7. Alarm annunciation includes navigation link to a user-selected display or URL.
8. Any displayed data that is changeable by the operator may be selected using the right mouse button and the alarm shall then be selectable on the screen. Selection of the alarm using this method shall allow the viewing of the alarm history or allow the creation of a new alarm.

K. Trendlog Information

1. AWS shall periodically gather historically recorded data stored in the building controllers and store the information in the system database. Stored records shall be appended with new sample data, allowing records to be accumulated. Systems that write over stored records shall not be allowed unless limited file size is specified. System database shall be capable of storing up to 50 million records before needing to archive data. Samples may be viewed at the web client. All trendlog records shall be displayed in standard engineering units.
2. AWS shall be capable of trending on an interval determined by a polling rate, or change-of-value.
3. AWS, Thick client, or Web Client shall be able to add and edit trendlogs and the setup information. This includes the information to be logged as well as the interval at which it is to be logged. All operations shall be password protected. Viewing may be accessed directly from any and all graphics on which a trended object is displayed.
4. AWS and Thick Client shall include a Trendlog Wizard for setup of multiple trend logs

simultaneously. Wizard shall walk user through all necessary steps. Wizard shall have its own pull-down selection for startup, or may be started by right-clicking on value displayed on graphic, and then selecting Trendlogs from the displayed menu.

5. AWS shall operate on one virtualized server while the Microsoft SQL runs on a separate virtualized server for the system database. Provide all licensing necessary Microsoft SQL.
6. Any displayed data that is changeable by the operator may be selected using the right mouse button and the trendlog shall then be selectable from a menu on the screen. Selection of the trendlog using this method shall allow the viewing of the trendlog data in the DataViewer.
7. DataViewer shall provide:

    a. Software that is capable of graphing the trend-logged object data shall be included.
    b. Access and ability to create, edit and view are restricted to users by user account credentials
    c. Specific and repeatable URL defines the trendlog(s) views for browser bookmarking and email compatibility.
    d. Call out of trendlog value at intersection of trend line and mouse-over vertical axis.
    e. Trendlog or Energy log and companion logs can be configured to display on one of two independent vertical scales embedded in the display.
    f. Click zoom for control of data set viewed along either graph axis.
    g. User-specifiable start and end dates as well as a fast scroll features that supports click zoom of macro scale view of the data for quickly finding data set based on visual signature.
    h. User export of the viewed data set to MS Excel.
    i. Web browser-based help.
    j. Optional min/max ranges (Upper Control Limits, Lower Control Limits) for each value.

L. Energy Log Information

1. AWS shall be capable of periodically gathering energy log data stored in the field equipment and archive the information. Archive files shall be appended with new data, allowing data to be accumulated. Systems that write over archived data shall not be allowed unless limited file size is specified. Display all energy log information in standard engineering units.
2. All data shall be stored in database file format for direct use by third-party programs. Operation of system shall stay completely online during all graphing operations.
3. AWS operator shall be able to change the energy log setup information as well. This includes the meters to be logged, meter pulse value, and the type of energy units to be logged. All meters monitored by the system may be logged. System shall support using flow and temperature sensors for BTU monitoring.
4. AWS shall display data in tabular format form for both consumption and peak values. Data shall be shown in hourly, daily, weekly, monthly and yearly formats. In each format, the user shall be able to select a specific period of data to view.
5. Web client shall display data in tabular format and graphical format. Data shall be shown in hourly, daily, weekly, monthly and yearly formats. In each format, the user shall be able to select a specific period of data to view.

M. Demand Limiting

1. AWS shall include demand limiting program that includes two types of load shedding. One type of load shedding shall shed/restore equipment in binary fashion based on energy usage when compared to shed and restore settings. The other type of shedding shall adjust operator-selected control setpoints in an analog fashion based on energy usage when compared to shed and restore settings. Shedding may be implemented independently on each and every zone or piece of equipment connected to system.
2. Binary shedding shall include minimum of five (5) priority levels of equipment shedding. All loads in a given priority level shall be shed before any loads in a higher priority level are shed. Load shedding within a given priority level shall include two methods. In one, the loads shall be shed/restored in a "first off-first on" mode, and in the other the loads are just shed/restored in a "first off-last on" (linear) fashion.
3. Analog shed program shall generate a ramp that is independently used by each individual zone or individual control algorithm to raise the appropriate cooling setting and lower appropriate heating setting to reduce energy usage.
4. AWS shall be able to display the status of each and every load shed program. Status of each load assigned to an individual shed program shall be displayed along with English description of each load.

N. Tenant Activity

1. AWS shall include program that monitors after-hours overrides by tenants, logs that data, and generates a bill based on usage and rate charged for each tenant space. Tenant Activity program shall be able to assign multiple zones, from a list of every zone connected to system, to a particular tenant. Every zone is monitored for after-hours override usage and that data logged in AWS. Operator may then generate a bill based on the usage for each tenant and the rate charged for any overtime use.
2. Configuration shall include entry of the following information for use in logging and billing:

    a. Tenant's contact name and address
    b. One or multiple tenant zones that make up a total tenant space, including a separate billing rate for each separate zone
    c. Minimum and maximum values an event duration and event limit
    d. Property management information
    e. Overall billing rate
    f. Seasonal adjustments or surcharge to billing rate
    g. Billing notification type including, but not limited to printer, file and email
    h. Billing form template

3. Logging shall include recording the following information for each and every tenant event:

    a. Zone description
    b. Time the event begins
    c. Total override time
    d. Limits shall be applied to override time

4. A tenant bill shall be generated for a specific period using all the entered configuration data and the logged data. User with appropriate security level shall be able to view and override billing information. User shall be able to select a billing period to view and be able to delete events from billing and edit a selected tenant activity event's override time.

O. Reports

1. AWS shall be capable of periodically producing reports of trendlogs, alarm history, tenant activities, device summary, energy logs, and override points. The frequency, content, and delivery are to be user adjustable.
2. All reports shall be capable of being delivered in multiple formats including text- and comma-separated value (CSV) files. The files can be printed, emailed, or saved to a folder, either on the server hard drive or on any network drive location.

P. Configuration/Setup

1. Provide means for operator to display and change system configuration. This shall include, but not be limited to system time, day of the week, date of daylight savings set forward/set back, printer termination, port addresses, modem port and speed, etc. Items shall be modified using understandable terminology with simple mouse/cursor key movements.
2. The building management system (BMS) shall operate the user interface in any region and support varying languages and locale settings, without the addition of special software. Localization tools shall be commonly available open sourced or purchased products, No BMS manufacturer specific software will be acceptable. The following localization capabilities shall be supported:

    a. Locale settings related to date, time and number formats
    b. Multiple left-to-right languages supported including Cyrillic languages
    c. On the fly locale change using browser language settings (multiple language and locale setting change)
    d. Default character encoding shall be UTF-8
    e. Each localized BMS element can be localized independently and operate autonomously

Q. Field Engineering Tools

1. AWS shall include field engineering tools for programming all controllers supplied. All controllers shall be programmed using graphical tools that allow the user to connect function blocks on screen that provide sequencing of all control logic. Function blocks shall be represented by graphical displays that are easily identified and distinct from other types of blocks. Graphical programming that uses simple rectangles and squares is not acceptable.
2. User shall be able to select a graphical function block from menu and place on screen. Provide zoom in and zoom out capabilities. Function blocks shall be downloaded to controller without any reentry of data.
3. Programming tools shall include a real-time operation mode. Function blocks shall display real-time data and be animated to show status of data inputs and outputs when in real-time operation. Animation shall show change of status on logic

devices and countdown of timer devices in graphical format.

4. Field engineering tools shall also include a database manager of applications that include logic files for controllers and associated graphics. Operator shall be able to select unit type, input/output configuration and other items that define unit to be controlled. Supply minimum of 250 applications as part of workstation software.
5. Field engineering tool shall include Device Manager for detection of devices connected anywhere on the BACnet network by scanning the entire network. This function shall display device instance, network identification, model number, and description of connected devices. It shall record and display software file loaded into each controller. A copy of each file shall be stored on the computer's hard drive. If needed, this file shall be downloaded to the appropriate controller using the mouse.
6. AWS shall automatically notify the user when a device that is not in the database is added to the network.
7. AWS shall include backup/restore function that will back up entire system to selected medium and then restore system from that medium. The system shall be capable of creating a backup for the purpose of instantiating a new client PC.
8. The system shall provide a means to scan, detect, interrogate, and edit third-party BACnet devices and BACnet objects within those devices.

R. Workstation Hardware

1. Owner shall provide virtualized server and Owner shall assist in installing software on the server. EMCS Contractor Laptop Computer.

S. Software

1. At the conclusion of the project, contractor shall leave with owner a electronic copy that includes the complete software operation system and project graphics, setpoints, system parameters, etc. This backup shall allow the owner to completely restore the system in the case of a computer malfunction.

T. Web Client

1. EMCS supplier shall provide an HTML5-based browser access to the AWS as part of standard installation. User must be able to access all displays of real-time data that are part of the AWS using a standard web browser. Web browser shall tie into the network through owner-supplied Ethernet network connection. The web client shall support a minimum of 200 users with a single license.
2. Browser shall be standard version of Microsoft Internet Explorer v10.0 or later, Firefox v19.0 or later, Chrome v24.0 or later, and Safari v7.1.1 or later. No special vendor-supplied software shall be needed on computers running browser. Data shall be displayed in real-time and update automatically without user interaction.
3. Web pages shall be automatically generated using HTML5 from the data display files that reside on the AWS. Any system that requires use of an HTML editor for generation of web pages shall not be considered.
4. Access through web client or thick client shall utilize the same hierarchical security scheme as the AWS. User shall be asked to log on once the client makes connection to the AWS. Once the user logs on, any and all changes that are made shall be tracked by the AWS. The user shall be able to change only those items he or she has authority to change. A user activity report shall show any and all activity

of the users who have logged on to the system, regardless of whether those changes were made using a web client, thick client or through the AWS.

5. Shall provide User Session Management including the ability to view all connected user sessions to the web client, see how long they have been active/inactive for each unique session, and force log-out for any or all sessions.
6. Shall provide menu-style navigation access to primary features, i.e. alarm history, DataViewer, Search scheduled points and Zones, System Activity, User Session Management, and Top Display
7. Web client shall, at a minimum, support the following tablets:

    a. Android platform:

        1) Google Nexus
        2) Samsung Galaxy Note

    b. Apple platform

        1) Ipad
        2) Apple Ipad Mini

2.2 BUILDING CONTROLLER

A. General Requirements

1. BACnet Conformance

    a. Building Controller shall be approved by the BTL as meeting the BACnet Building Controller requirements.
    b. Please refer to section 22.2, BACnet Functional Groups, in the BACnet standard, for a complete list of the services that must be directly supported to provide each of the functional groups listed above. All proprietary services, if used in the system, shall be thoroughly documented and provided as part of the submittal data. All necessary tools shall be supplied for working with proprietary information.

2. Building controller shall be of scalable design such that the number of trunks and protocols may be selected to fit the specific requirements of a given project.
3. The controller shall be capable of panel-mounted on DIN rail and/or mounting screws.
4. The controller shall be capable of providing global control strategies for the system based on information from any objects in the system, regardless if the object is directly monitored by the building controller module or by another controller.
5. The controller shall be capable of running up to six (6) independent control strategies simultaneously. The modification of one control strategy does not interrupt the function or runtime others.
6. The software program implementing the DDC strategies shall be completely flexible and user-definable. All software tools necessary for programming shall be provided as part of project software. Any systems utilizing factory pre-programmed global strategies that cannot be modified by field personnel on-site, using a wide area network (WAN) or downloaded through remote communications are not acceptable. Changing global strategies using firmware changes is also

unacceptable.

7. Programming shall be object-oriented using control function blocks and support DDC functions. All flowcharts shall be generated and automatically downloaded to controller. Programming tool shall be supplied and be resident on workstation. The same tool shall be used for all controllers.
8. The programming tool shall provide means to graphically view inputs and outputs to each program block in real-time as program is executing. This function may be performed using the operator's workstation or field computer.
9. Controller shall have 6,000 Analog Values and 6,000 Binary Values.
10. Controller IP configuration can be done via a direct USB connect with an operator's workstation or field computer.
11. Controller shall have at a minimum a Quad Core 996Ghz processor to ensure fast processing speeds.
12. Global control algorithms and automated control functions shall execute using a 64-bit processor.
13. Controller shall have a minimum of 1 GB of DDR3 SDRAM on a 533Mhz bus to ensure high speed data recording, large data storage capacity and reliability.
14. Controller shall support two (2) on-board EIA-485 ports capable of supporting various EIA-485 protocols including, but not limited to BACnet MS/TP and Modbus.

    a. Ports are capable of supporting various EIA-485 protocols including, but not limited to BACnet MS/TP and Modbus.

15. Controller shall support two (2) ports—each of gigabit speed—Ethernet (10/100/1000) ports.

    a. Ports are capable of supporting various Ethernet protocols including, but not limited to BACnet IP, FOX, and Modbus.

16. All ports shall be capable of having protocol(s) assigned to utilize the port's physical connection.
17. The controller shall have at a minimum four (4) onboard inputs, two (2) universal inputs and two (2) binary inputs.
18. Schedules

    a. Building controller modules shall provide normal seven-day scheduling, holiday scheduling and event scheduling.
    b. Each building controller shall support a minimum of 380 BACnet Schedule Objects and 380 BACnet Calendar Objects.

19. Logging Capabilities

    a. Each building controller shall log as minimum 2,000 objects at 15-minute intervals. Any object in the system (real or calculated) may be logged. Sample time interval shall be adjustable at the operator's workstation.
    b. Logs may be viewed both on-site or off-site using WAN or remote communication.
    c. Building controller shall periodically upload trended data to networked operator's workstation for longterm archiving if desired.
    d. Archived data stored in database format shall be available for use in third-party spreadsheet or database programs.

20. Alarm Generation

    a. Alarms may be generated within the system for any object change of value or state (either real or calculated). This includes things such as analog object value changes, binary object state changes, and various controller communication failures.
    b. Each alarm may be dialed out as noted elsewhere.
    c. Alarm log shall be provided for alarm viewing. Log may be viewed on-site at the operator's terminal or off-site using remote communications.
    d. Controller must be able to handle up to 2,000 alarm setups stored as BACnet event enrollment objects, with system destination and actions individually configurable.

21. Demand Limiting

    a. Demand limiting of energy shall be a built-in, user-configurable function. Each controller module shall support shedding of up to 1,200 loads using a minimum of two types of shed programs.
    b. Load shedding programs in building controller modules shall operate as defined in section 2.1.J of this specification.

22. Tenant Activity Logging

    a. Tenant Activity logging shall be supported by a building controller module. Each independent module shall support a minimum of 380 zones.
    b. Tenant Activity logging shall function as defined in section 2.1.K of this specification.

B. BACnet MS/TP

1. BACnet MS/TP LAN must be software-configurable from 9.6 to 115.4Kbps

    a. Each BACnet MS/TP LAN shall support 64 BACnet devices at a minimum.
    b. All proprietary object types, if used in the system, shall be thoroughly documented and provided as part of the submittal data. All necessary tools shall be supplied for working with proprietary information.

C. BACnet IP

1. The building controller shall comply with Annex J of the BACnet specification for IP connections. This device shall use Ethernet to connect to the IP internetwork, while using the same Ethernet LAN for non-IP communications to other BACnet devices on the local area network (LAN).
2. Must support interoperability on WANs and campus area networks (CANs), and function as a BACnet Broadcast Management Device (BBMD).
3. Each controller shall support at a minimum 128 BBMD entries.
4. BBMD management architecture shall support 3,000 subnets at a minimum.
5. Shall support BACnet Network Address Translation.
6. All proprietary object types, if used in the system, shall be thoroughly documented and provided as part of the submittal data. All necessary tools shall be supplied for working with proprietary information.

D. Expansion Ports

1. Controller shall support two (2) expansion ports.

    a. Combining the two on-board EIA-458 ports with fully loaded expansion ports, the controller shall support six (6) EIA-485 trunks simultaneously.

2. Expansion cards that mate to the expansion ports shall include:

    a. Dual port EIA-485 card.
    b. LON network card.

E. Niagara Framework

1. Controller shall utilize the Tridium Niagara Framework.

    a. Niagara Framework shall be version 3.8 or newer.
    b. All Niagara licensing shall be stored on a removable MicroSD card for fast in-field replacement of controller.

2. The Niagara License for the controllers shall be an open license.

    a. The controller shall be programmable via Niagara Workplace programming tool.
    b. The controller shall be programmable via an Niagara embedded Workplace programming tool.

F. Power Supply

1. Input for power shall accept between 17 and 30VAC, 47 and 63Hz.
2. Optional rechargeable battery for shutdown of controller including storage of all data in flash memory.
3. On-board capacitor will ensure continuous operation of real-time clocks for minimum of 14 days.

G. Controller shall be in compliance with the following:

1. UL 916 for open energy management
2. FCC Class B
3. ROHS
4. IEC 60703
5. C-Tick Listed

H. Controller shall operate in the following environmental conditions:

1. -4 to 149 °F (-20 to 65 °C) without optional battery, or 32 to 122 °F (0 to 50 °C) with optional battery.
2. 0 to 95% relative humidity (RH), non-condensing.

2.3 CENTRAL PLANT AND AIR HANDLER APPLICATION CONTROLLERS

A. Provide one or more native BACnet application controllers for each air handler and provide native BACnet application controllers as needed for central plant control that adequately cover all objects listed in object list. All controllers shall interface to building controller through either MS/TP LAN using BACnet protocol, or Ethernet LAN using BACnet over Ethernet or BACnet TCP/IP. No gateways shall be used. Controllers shall include input, output and self-contained logic program as needed for complete control of units. Controllers shall be fully programmable using graphical programming blocks. Programming tool shall be resident on operator workstation and be the same tool as used for the building controller. No auxiliary or non-BACnet controllers shall be used.

B. BACnet Conformance

1. Application controllers shall be approved by the BTL as meeting the BACnet Advanced Application Controller requirements.
2. Please refer to section 22.2, BACnet Functional Groups, in the BACnet standard, for a complete list of the services that must be directly supported to provide each of the functional groups listed above. All proprietary services, if used in the system, shall be thoroughly documented and provided as part of the submittal data. All necessary tools shall be supplied for working with proprietary information.
3. Standard BACnet object types supported shall include, as a minimum, Analog Input, Analog Output, Analog Value, Binary Input, Binary Output, Binary Value, Multi-state Values, Device, File, and Program object types. All proprietary object types, if used in the system, shall be thoroughly documented and provided as part of the submittal data. All necessary tools shall be supplied for working with proprietary information.

C. Application controllers shall include universal inputs with 12-bit resolution that accept 3K and 10K thermistors, 0– 10VDC, Platinum 1000 ohm RTD, 0–5VDC, 4–20mA and dry contact signals. Any input on a controller may be either analog or digital with a minimum of three inputs that accept pulses. Controller shall also include support and modifiable programming for interface to intelligent room sensor with digital display. Controller shall include binary and analog outputs on board. Analog outputs with 12-bit resolution shall support either 0–10VDC or 0–20mA. Binary outputs shall have LED indication of status. Software shall include scaling features for analog outputs. Application controller shall include 20VDC voltage supply for use as power supply to external sensors.

1. All outputs must have onboard Hand-Off-Auto (HOA) switches and a status indicator light. HOA switch position shall be monitored. Each analog output shall include a potentiometer for manually adjusting the output when the HOA switch is in the Hand position.
2. The position of each and every HOA switch shall be available system wide as a BACnet object property.

D. All program sequences shall be stored on board application controller in EEPROM. No batteries shall be needed to retain logic program. All program sequences shall be executed by controller up to 20 times per second (minimum of 10 times per second) and capable of multiple PID loops for control of multiple devices. All calculations shall be completed using floating-point math and system shall support display of all information in floating-point nomenclature at operator's terminal.

1. The following control blocks shall be supported:

a. Natural Log
b. Exponential
c. Log base 10
d. X to the power of Y
e. Nth square root of X
f. 5th Order Polynomial Equations
g. Astronomical Clock (sunrise/sunset calculation)
h. Time based schedules

E. Programming of application controller shall be completely modifiable in the field over installed BACnet LANs or remotely using modem interface. Operator shall program logic sequences by graphically moving function blocks on screen and tying blocks together on screen. Application controller shall be programmed using programming tools as described in operator's terminal section.

F. Application controller shall include support for intelligent room sensor (see Section 2.10.B.) Display on intelligent room sensor shall be programmable at application controller and include an operating mode and a field service mode. All button functions and display data shall be programmable to show specific controller data in each mode, based on which button is pressed on the sensor. See sequence of operation for specific display requirements at intelligent room sensor.

G. Schedules

1. The controller shall support a minimum of 3 BACnet Schedule Objects and have a real time clock on board with battery backup to maintain time through a power loss.

H. Logging Capabilities

1. Controller shall support a minimum of 50 trendlogs. Any object in the controller (real or calculated) may be logged. Sample time interval shall be adjustable at the operator's workstation.
2. Controller shall periodically upload trended data to system server for long-term archiving if desired. Archived data stored in (MS Jet Database or SQL) database form and shall be available for use in third-party spreadsheet or database programs.

I. Alarm Generation

1. Alarms may be generated within the controller for any object change of value or state (either real or calculated). This includes things such as analog object value changes, and binary object state changes.
2. Alarm log shall be provided for alarm viewing. Log may be viewed on-site at the operator's terminal or off-site using remote communications.
3. Controller must be able to handle up to 25 alarm setups stored as BACnet event enrollment objects, with system destination and actions individually configurable.

J. The controller processor shall be a 32-bit processor.

K. The packaging of the controller shall provide operable doors to cover the terminals once installation is complete. The housing of the controller shall provide for DIN rail mounting

and also fully enclose circuit board.

2.4 EXPANDABLE CENTRAL PLANT APPLICATION CONTROLLERS

A. General

1. Expandable application controller shall be capable of providing control strategies for the system based on information from any or all connected inputs. The program that implements these strategies shall be completely flexible and user-definable. Any systems utilizing factory pre-programmed global strategies that cannot be modified by field personnel on-site though simple download are not acceptable. Changing global strategies using firmware changes is also unacceptable. Program execution of controller shall be a minimum of once per second.
2. Programming shall be object-oriented using control program blocks. Controller shall support a minimum of 500 Analog Values and 500 Binary Values. Each and every analog and binary value shall support standard BACnet priority arrays. Programming tool shall be provided with system and shall be the same tool that is used to program the building controller. All flowcharts shall be generated and automatically downloaded to controller. No re-entry of database information shall be necessary.
3. Provide means to graphically view inputs and outputs on each program block in real-time as program is executing. This function may be performed using the operator's terminal or field computer.
4. Controller shall have adequate data storage to ensure high performance and data reliability. Battery shall retain static RAM memory and real-time clock functions for a minimum of 1.5 years (cumulative). Battery shall be a field-replaceable (non-rechargeable) lithium type. Unused battery life shall be 10 years.
5. The onboard, battery-backed real-time clock must support schedule operations and trendlogs.
6. Global control algorithms and automated control functions should execute using 32-bit processor.
7. Controller shall include both onboard 10Base-T/100Base-TX Ethernet BACnet communication over UTP and shall include BACnet IP communication. In addition, controller shall include BACnet Point-to-Point (PTP) connection port.
8. The base unit of the controller shall host up to 8 expansion modules with various I/O combinations. These inputs and outputs shall include universal 12-bit inputs, binary triac outputs, and 8-bit switch-selectable analog outputs (0–10V or 0–20mA). Inputs shall support 3K and 10K thermistors, 0–5VDC, 0–10VDC, 4–20mA, dry contacts and pulse inputs directly.
9. All outputs must have onboard Hand-Off-Auto (HOA) switches and a status indicator light. HOA switch position shall be monitored. Each analog output shall include a potentiometer for manually adjusting the output when the HOA switch is in the Hand position.
10. The position of each and every HOA switch shall be available system wide as a BACnet object. Expandable central plant controller shall provide up to 176 discreet inputs/outputs per base unit.

B. BACnet Conformance

1. Central plant/AHU controller shall, as a minimum, support PTP, MS/TP and Ethernet

BACnet LAN types. It shall communicate directly through these BACnet LANs as a native BACnet device and shall support simultaneous routing functions between all supported LAN types. Controllers shall be approved by the BTL as meeting the BACnet Advanced Application Controller requirements.

2. Please refer to Section 22.2, BACnet Functional Groups, in the BACnet standard, for a complete list of the services that must be directly supported to provide each of the functional groups listed above. All necessary tools shall be supplied for working with proprietary information.
3. Standard BACnet object types supported shall include, as a minimum, Analog Input, Binary Input, Analog Output, Binary Output, Analog Value, Binary Value, Device, File, Group, Event Enrollment, Notification Class, Program, and Schedule object types. All necessary tools shall be supplied for working with proprietary information.
4. The Controller shall comply with Annex J of the BACnet specification for IP connections. This device shall use Ethernet to connect to the IP internetwork, while using the same Ethernet LAN for non-IP communications to other BACnet devices on the LAN. Must support interoperability on WANs and CANs, and function as a BBMD.

C. Schedules

1. Each central plant/AHU controller shall support a minimum of 50 BACnet Schedule Objects.

D. Logging Capabilities

1. Each controller shall support a minimum of 200 trendlogs. Any object in the system (real or calculated) may be logged. Sample time interval shall be adjustable at the operator's workstation.
2. Controller shall periodically upload trended data to system server for long-term archiving if desired.
3. Archived data stored in database format shall be available for use in third-party spreadsheet or database programs.

E. Alarm Generation

1. Alarms may be generated within the system for any object change of value or state (either real or calculated). This includes things such as analog object value changes, binary object state changes, and various controller communication failures.
2. Alarm log shall be provided for alarm viewing. Log may be viewed on-site at the operator's terminal or off-site using remote communications.
3. Controller must be able to handle up to 200 alarm setups stored as BACnet event enrollment objects, with system destination and actions individually configurable.

2.5 TERMINAL UNIT APPLICATION CONTROLLERS (Heat Pumps, AC Units, Fan-Coils)

A. Provide one native BACnet application controller for each piece of unitary mechanical equipment that adequately covers all objects listed in object list for unit. All controllers shall interface to building controller through MS/TP LAN using BACnet protocol. No gateways shall be used. Controllers shall include input, output and self-contained logic

program as needed for complete control of unit.

B. BACnet Conformance

1. Application controllers shall, as a minimum, support MS/TP BACnet LAN types. They shall communicate directly using this BACnet LAN at 9.6, 19.2, 38.4 and 76.8 Kbps, as a native BACnet device. Application controllers shall be approved by the BTL as meeting the BACnet Application Specific Controller requirements and support all BACnet services necessary to provide the following BACnet functional groups:

    a. Files Functional Group
    b. Reinitialize Functional Group
    c. Device Communications Functional Group

2. Please refer to Section 22.2, BACnet Functional Groups in the BACnet standard, for a complete list of the services that must be directly supported to provide each of the functional groups listed above. All proprietary services, if used in the system, shall be thoroughly documented and provided as part of the submittal data. All necessary tools shall be supplied for working with proprietary information.
3. Standard BACnet object types supported shall include, as a minimum, Analog Input, Analog Output, Analog Value, Binary Input, Binary Output, Binary Value, Device, File, and Program Object Types. All proprietary object types, if used in the system, shall be thoroughly documented and provided as part of the submittal data. All necessary tools shall be supplied for working with proprietary information.

C. Application controllers shall include universal inputs with 10-bit resolution that can accept 3K and 10K thermistors, 0– 5VDC, 4–20mA, dry contact signals and a minimum of 3 pulse inputs. Any input on controller may be either analog or digital. Controller shall also include support and modifiable programming for interface to intelligent room sensor. Controller shall include binary outputs on board with analog outputs as needed.

D. All program sequences shall be stored on board controller in EEPROM. No batteries shall be needed to retain logic program. All program sequences shall be executed by controller 10 times per second and shall be capable of multiple PID loops for control of multiple devices. Programming of application controller shall be completely modifiable in the field over installed BACnet LANs or remotely through modem interface. Operator shall program logic sequences by graphically moving function blocks on screen and tying blocks together on screen. Application controller shall be programmed using same programming tools as building controller and as described in operator workstation section. All programming tools shall be provided and installed as part of system.

E. Application controller shall include support for intelligent room sensor (see Section 2.10.B.) Display on room sensor shall be programmable at controller and include an operating mode and a field service mode. All button functions and display data shall be programmable to show specific controller data in each mode based on which button is pressed on the sensor. See sequence of operation for specific display requirements at intelligent room sensor.

2.6 VAV BOX CONTROLLERS—SINGLE DUCT

A. Provide one native BACnet application controller for each VAV box that adequately covers all objects listed in object list for unit. All controllers shall interface to building controller through MS/TP LAN using BACnet protocol. No gateways shall be used. Controllers shall include on board CFM flow sensor, inputs, outputs and programmable, self-contained logic program as needed for control of units.

B. BACnet Conformance

1. Application controllers shall, at a minimum, support MS/TP BACnet LAN types. They shall communicate directly through this BACnet LAN at 9.6, 19.2, 38.4 and 76.8 Kbps, as a native BACnet device. Application controllers shall be approved by the BTL as meeting the BACnet Application Specific Controller requirements.
2. Please refer to Section 22.2, BACnet Functional Groups, in the BACnet standard, for a complete list of the services that must be directly supported to provide each of the functional groups listed above. All proprietary services, if used in the system, shall be thoroughly documented and provided as part of the submittal data. All necessary tools shall be supplied for working with proprietary information.
3. Standard BACnet object types supported shall include, as a minimum, Analog Input, Analog Output, Analog Value, Binary Input, Binary Output, Binary Value, Device, File, and Program Object Types. All proprietary object types, if used in the system, shall be thoroughly documented and provided as part of the submittal data. All necessary tools shall be supplied for working with proprietary information.

C. Application controllers shall include universal inputs with 10-bit resolution that can accept 3K and 10K thermistors, 0–5 VDC, and dry contact signals. Inputs on controller may be either analog or digital. Controller shall also include support and modifiable programming for interface to intelligent room sensor with digital display. Controller shall also include binary outputs on board. For applications using variable speed parallel fans, provide a single analog output selectable for 0-10 V or 0-20 mA control signals. Application controller shall include microprocessor driven flow sensor for use in pressure independent control logic. All boxes shall be controlled using pressure-independent control algorithms and all flow readings shall be in CFM (LPS if metric).

D. All program sequences shall be stored on board application controller in EEPROM. No batteries shall be needed to retain logic program. All program sequences shall be executed by controller 10 times per second and shall be capable of multiple PID loops for control of multiple devices. Programming of application controller shall be completely modifiable in the field over installed BACnet LANs or remotely using modem interface. Operator shall program logic sequences by graphically moving function blocks on screen and tying blocks together on screen. Application controller shall be programmed using the same programming tool as Building Controller and as described in operator's workstation section. All programming tools shall be provided as part of system.

E. Application controller shall include support for intelligent room sensor. Display on room sensor shall be programmable at application controller and include an operating mode and a field service mode. All button functions and display data shall be programmable to show specific controller data in each mode based on which button is pressed on the sensor. See sequence of operations for specific display requirements for intelligent room sensor.

F. On board flow sensor shall be microprocessor-driven and pre-calibrated at the factory.

Pre-calibration shall be at 16 flow points as a minimum. All factory calibration data shall be stored in non-volatile memory. Calibration data shall be field adjustable to compensate for variations in VAV box type and installation. All calibration parameters shall be adjustable through intelligent room sensor. Operator's workstation, portable computers, and special hand-held field tools shall not be needed for field calibration.

G. Provide duct temperature sensor at discharge of each VAV box that is connected to controller for reporting back to operator's workstation.

H. VAV-SD-I-H are not allowed.

2.7 SENSORS AND MISCELLANEOUS DEVICES

A. Provide classroom function 24 VAC power thermostats for control of single fan coil units with up to two stages of heating and cooling as required on the drawings for Fan Coil Units or Air Handlers with Powerline Start/Stop control only.

1. Manufacturer

    a. Honeywell

2. Provide backlit digital display that indicates current room temperature, set point and operation mode.
3. Provide an EPROM memory without battery backup for indefinite retention of set points and user selected operation mode.
4. Provide configurable operation mode set as Heat-Off-Cool-Auto with an On-Auto fan configuration.
5. Provide installer programmable range stops.
6. Provide a +/- 1F accuracy.

B. Provide Intelligent Room Sensor with LCD Readout (Microset II, IV or VLD) thermostats tied back to the DDC with local occupant adjustable schedule over ride as required on the drawings for administration offices, libraries, kitchens, dining rooms, computer labs and commons areas.

1. Touch screen Communicating Thermostat (VLD) hardware shall:

    a. Manufacturer:

        1) Alerton

    b. Include a 32 Bit processor
    c. Include a backlit touch screen for the user interface, buttons are not allowed.
    d. Include Three (3) universal inputs with 12-bit resolution that can accept 3K and 10K Type II thermistors, 0-10VDC, 0–5 VDC, 4-20mA, and dry contact signals. Inputs on controller may be either analog or digital.
    e. Include built-in temperature sensor.
    f. Include built-in humidity sensor.
    g. Include Six (6) relay outputs on board.
    h. Include Two (2) analog outputs with 12-bit resolution. Each auto-detecting for 0-10 V or 4-20 mA control signals.

i. Meet the requirements of Listed Underwriters Laboratory for Open Energy Management Equipment (PAZX) under the UL Standard for Safety 916.
j. Meet the requirements of EMC Directive (European CE Mark) EN 60950.
k. Meet the requirements for FCC Part 15, Class B.
l. Be powered by 24VAC power.3
m. VLDs shall be fully programmable. VLD-362-FF and other Fixed Function Touchscreen Communicating Thermostat shall not be allowed.

2. Touch screen Communicating Thermostat (Microset) hardware shall:

a. Manufacturer:

1) Alerton

b. Room sensor shall include:

1) Backlit touchscreen LCD digital display
2) Temperature sensor
3) Humidity sensor
4) Programmable Status Light indicator
5) BACnet MS/TP communication up to 115.2kbps

c. Temperature sensor shall be a Uni-Curve Type II thermistor with an accuracy of +/- 0.36 °F (0.3 °C) at calibration point over the range of 32 to 158 °F or better.
d. Humidity sensor shall have an accuracy of +/-3% from 10 to 90% relative humidity (RH) or better, non-condensing.
e. The intelligent room sensor's Status Light indicator shall have a minimum of four (4) colors (blue, red, amber and green) that will cast a glow onto the wall below the sensor to be used as visual indicator to the occupants of the condition of the system. The color and on/off state of the Status Light indicator shall be fully programmable.
f. The user shall interact with the smart sensor using a touchscreen, with no buttons allowed.
g. The intelligent room sensor shall have provisions for a tamper proof installation requiring tools to be removed from the wall.
h. The touchscreen shall have a surface hardness of Mohs 7 or greater to prevent being easily scratched.
i. Controller shall function as room control unit, and allow occupant to raise and lower setpoint, and activate terminal unit for override use—all within limits as programmed by building operator.
j. The intelligent room sensor shall simultaneously display room setpoint, room temperature, and outside temperature at each controller.
k. The intelligent room sensor shall have the ability to add or remove from the display time-of-day, room humidity, and indoor air temperature to customize the view for the customer.
l. The intelligent room sensor must have the capability to show temperatures in degrees Fahrenheit or degrees Celsius.
m. A communication loss or improper communications wiring shall be displayed on the LCD screen to aid in trouble shooting.
n. Information about the version of firmware shall be displayable on the LCD

screen.

o. A cleaning mode will be provided to allow for the touchscreen to be cleaned without inadvertently making changes to system parameters.

p. The intelligent room sensor shall have the ability to display the status of a lighting zone and control the on/off state of the zone from the touchscreen using a tenant-accessible display page.

q. The intelligent room sensor shall have the ability to display the status of a window zone (e.g., blinds) and control the on/off state of the zone from the touchscreen using a tenant-accessible display page.

r. After Hours Override shall:

1) Override time may be set and viewed in 30-minute increments.
2) Override time countdown shall be automatic, but may be reset to zero by occupant from the sensor.
3) Time remaining shall be displayed. Display shall show the word "OFF" in unoccupied mode unless a function button is pressed.

s. The intelligent room sensor shall also allow service technician access to hidden functions for advanced system configuration. This functionality shall be accessed-protected with a configurable PIN number.

t. Field Service Mode shall allow access to common parameters as dictated by the application's sequence of operations. The parameters shall be viewed and set from the intelligent room sensor with no computer or other field service tool needed.

u. If the intelligent room sensor is connected to VAV controller, Balance Mode shall allow a VAV box to be balanced and all air flow parameters viewed. The balancing parameters shall be viewed and set from the intelligent room sensor with no computer or other field service tool needed.

v. Intelligent Room Sensor shall be in compliance of the following:

1) UL Standard for Safety 916
2) FCC Part 15.107 & 109, Class B, CFR47-15
3) EMC Directive 89/336/EEC (European CE Mark)

C. Provide water flow (GPM) meters as required by the points list or the sequence of operations and sized as required for proper operation.

1. Manufacturer

a. Onicon

2. Provide snubbers for all water flow switches and water DP sensors.

D. All temperature sensors, including duct, immersion, wall or others shall be 10K type 2, no exceptions.

E. Provide status indication for all pump motors, fans and other load devices (including exhaust fans) with a field adjustable amp drop current transformer (CT) switch to detect belt loss, mechanical failure or sheared couplings.

1. Manufacturer:

a. Veris Industries

2. Self adjusting CTs are not allowed.
3. Provide VFDs Compatible CTs capable of sensing amp draw over the full range of the VFD.
4. CTs shall not include other on-board functions such as start/stop relay.

F. Provide Freeze Stat with automatic reset for all air handlers shown as required on the drawings with fresh air intakes.

1. Manufacturer
   a. Kele

2. Provide manual reset freeze stats located in a position that allows reset without climbing on a ladder.
3. Provide 2 sets of contacts. One contact shall be monitored by the Controls System and the second contact shall be hardwired into the blower motor/starter.
4. Locate freeze stat sensors before the cooling coils and after preheat coils (if equipped) with minimum clearances as required by the manufactures and engineer.

G. Provide differential pressure sensor for static pressure as required, shall have range selection and LCD readout of actual pressure (PSI) on the face of the units.

1. Manufacturer

   a. Veris Industries

2. Provide manual reset freeze stats located in a position that allows reset without climbing on a ladder.

H. Provide static pressure sensor for measuring static pressure of supply air ducts on Air Handlers over 10 tons.

1. Manufacturer

   a. Veris Industries

2. The unit shall have a range selection and LCD readout of actual pressure ("WC) on the face of the units
3. Provide DDC logic to monitor a setpoint (ad].) as determined by the Testing and Balancing Company based on unit design point and generate an alarm to indicate low air flow when air flow falls below 80% (ad].) of design point. The alarm shall NOT shut down the unit.

I. Provide a panel mount 100VA Power Supply at each controller panel for protection of all controllers in the panel.

1. Manufacturer:

   a. Functional Devices, Inc.

2. Provide an over current protection.
3. Provide primary power as 120 Vac and Secondary Power as 24Vac with LED Indicator
4. Provide a 24Vac On /Off Switch and Breaker
5. Provide onboard 10 amp main breaker to kill power to entire unit.

J. Provide a panel mounted 120 Vac Surge Arrestor for protection of all devices in any panel containing Global or Plant Controllers.

1. Manufacturer:

a. Ditek Corporation (DTK-120 Model)

K. Provide a single Outside Air Temperature Sensor with Humidity tied to the BAS for a monitoring site conditions and enabling boilers, chillers, and/or cooling towers through the DDC.

1. Provide a unit an operating temperature range from -10 F or lower to 120 F or higher with an accuracy of +/1F through out the specified range.
2. Mount the unit in a location approved by the Owner. Location selected should be on the north side of a building, a minimum of 96 inches above grade, away from penetrations including doors and windows, and in an area with good air circulation.
3. Provide an aluminum cover over the unit open on both sides for air circulation.
4. Provide aluminum blocking with an air space or other suitable means of mounting the sensor to walls or soffits to prevent unit from picking up radiant heat from the building.
5. Separate Outside Air Temperature sensors for boilers, chillers, cooling towers, etc. is NOT allowed.

L. Provide a self contained relay with a status light for all start/stop commands on motor starters or drives connected to pumps, chillers, boilers, and cooling towers, etc.

1. Manufacturer:

a. Functional Devices (Relay in a Box or RIB)

2. This device shall be visible for quick status indication by end user and shall not be mounted inside of any cabinets or panels.
3. The installing (sub) contractor shall provide relays wherever necessary to allow for a complete installation of the system.

M. Provide dry contact type relays where necessary to complete installation.

1. Relays shall be full feature relays with LED status indicator, integral over ride lever and push to test feature.
2. Relay bases shall be mounted to cabinets using a DIN Rail system.
3. Relays shall have separate bases by same manufacture as the relay itself.
4. Relays used for On/Off control shall use momentary pulsed relays. Magnetically latched relays shall not be used.
5. The installing (sub) contractor shall provide relays wherever necessary to allow for a complete installation of the system.

N. Provide End Switches on all dampers for 100% Outside Air Units, for units where dampers can restrict more than 50% of total air flow of the unit, the unit has more than 5,000 CFM total air flow, and on all Fire Dampers.

1. Manufacturer:

a. Kele

2. The End Switch be setup with a single pole, double throw relay wired in series with the blower motor/starter.

a. The second output of the double throw shall be wired back to BAS for status. The point shall be shown on the graphics.

3. The End Switch shall be a non-powered, dry contact type. No Mercury Switches are allowed.

O. Outside Air Flow Measurement Stations - Provide a flow device for measuring low velocity, turbulent air for outside air streams. To be installed in air handlers, rain hoods, etc.

1. Manufacturer / Product: Accutrol / IAQ-tek

a. Device must contain: a microprocessor-based I/O Module and one or more transducers which include a differential pressure sensor. Transducer shall contain HPIS transducer, ambienttemperature sensor, humidity sensor and barometric pressure sensor.
b. Transducer shall be capable of operating over the range of -40 to 120 degrees F without any temperature induced errors including zero or span shift.

2.8 ELECTRONIC CONTROL VALVES

A. Quality Assurance for electronic control valves

1. UL Listed Standard 873 and C.S.A. Class 4813 02 certified.
2. NEMA 1 rated enclosures for inside mounting
3. NEMA 4 rated enclosures for outside mounting or exposure.

B. Execution Details

1. Each DDC analog output point shall have an actuator feedback signal, independent of control signal, wired and terminated in the control panel for true position information and troubleshooting. Or the actuator feedback signal may be wired to the DDC as an analog input for true actuator position status.

a. Terminal Unit valves shall be Analog (2-10vdc, 4-20ma).
b. Booster-heat valve actuation shall be Analog (2-10vdc, 4-20ma).
c. Primary valve control shall be Analog (2-10vdc, 4-20ma).

2. Valve Sizing for Water Coil

    a. On/Off Control Valves shall be line size.
    b. Modulating Control Valve Body Size may be reduced at most two pipe sizes from the line size or not less than 1/2 the pipe size. The BAS contractor shall size all water coil control valves for the application as follows:

        1) Booster-heat valves shall be sized not to exceed 4-9 PSI differential pressure. (Size valve for 50% valve authority). Valve design pressure drop is equal to the sum of coil drop plus the balance valve drop.
        2) Primary valves shall be sized not to exceed 5-15 PSI differential pressure. (Size valve for 50% valve authority). Valve design pressure drop is equal to the sum of coil drop plus the balance valve drop.
        3) Butterfly valves shall be sized for modulating service at 60-70 degree rotation. Design velocity shall be 12 feet per second or less when used with standard EPDM seats.

    c. Valve mounting arrangements shall comply with the following:

        1) Unions shall be provided on all ports of two-way and three-way valves.
        2) Install three-way equal percentage Characterized Control valves in a mixing configuration with the "A" port piped to the coil.
        3) Install 2 1/2 inch and above, Three-Way globe valves, as manufactured for mixing or diverting service to the coil.
        4) Two-Way valve shall be piped in the return side of the coil in order to minimize ambient heat at the

C. Manufacturers:

1. Belimo (USA), Inc.
2. Honeywell, Inc.

D. Control Valves: Factory fabricated of type, body material, and pressure class based on maximum pressure and temperature rating of piping system, unless otherwise indicated.

E. The manufacturer shall warrant all components for a period of 5 years from the date of production, with the first two years unconditional.

F. Characterized Control Valves (CCV): Use on terminal units, VAV boxes reheat, fan coil units, blower coil units and unitary heating/cooling.

1. NPS 3" and Smaller: Nickel-plated forged brass body rated at no less than 400 PSI, stainless steel ball and stem, female, NPT union ends with a self-aligning, blowout proof, brass stem with a dual EPDM O-ring packing design. Fiberglas reinforced seats shall be used.
2. NPS 3/4" and Smaller: Nickel-plated forged brass body rated at no less than 600 PSI, chrome plated brass ball and stem, female, NPT union ends with a self-aligning, blowout proof, brass stem with a dual EPDM O-ring packing design. Fiberglas reinforced seats shall be used.
3. A TEFZEL, flow characterizing disc shall be installed in the inlet of two-way valves

and in the control port of three-way valves.

4. Sizing:

    a. Two-Position: Line size.
    b. Two-Way Modulating: [3 PSIG] [5 PSIG] or twice the load pressure drop, whichever is more.
    c. Three-Way Modulating: Twice the load pressure drop, but not more than [3 PSIG] [5 PSIG]

G. Combination of actuator and valve shall provide a minimum close-off pressure of 100 PSI.

H. The actuator shall be directly coupled to the valve at the factory. Valve assemblies requiring an extended stem design for actuator coupling are not acceptable.

I. Valves shall have a four-bolt mounting flange to provide a 4 position, field changeable, electronic actuator mounting arrangement

J. Hydronic system globe valves shall have the following characteristics: Use on Chilled Water & Hot Water Bypass valves or modulating applications (do not use on Primary Air Handlers)

1. NPS 2 and Smaller: ANSI Class 250 bronze body, stainless steel stem, brass plug, bronze seat, and a TFE packing.
2. NPS 2-1/2 and Larger: ANSI Class 125 or 250 cast iron body, stainless steel stem, bronze plug, bronze seat, and a TFE V-ring packing.
3. Sizing:

    a. Two-Position: Line size.
    b. Two-Way Modulating: 3 PSIG or twice the load pressure drop, whichever is more.
    c. Three-Way Modulating: Twice the load pressure drop, but not more than 5 PSIG
    d. Flow Characteristics: Two-way valves shall have equal percentage characteristics; three-way valves shall have linear characteristics.
    e. Close-Off (Differential) Pressure Rating: Combination of actuator and trim shall provide minimum close-off pressure rating of 150 percent of total system head pressure for two-way valves and 100 percent of the total system differential pressure for three-way valves.
    f. Two- and three-way globe valves shall be used only if characterized control valves do not fit the sizing criteria or application.

K. Butterfly Valves: Use on chilled/hot water plant isolation valves, cooling tower bypass valves (do not use on modulating applications other then cooling tower bypass control)

1. NPS 2 to 12: ANSI Class 125/150 and a body pressure rating of 200 PSI with a cast iron body, stainless steel disc, EPDM seat, and an extended neck. Disc-to-stem connection shall utilize an internal spleen. External mechanical methods to achieve this mechanical connection, such as pins or screws, are not acceptable.
2. NPS 14 and Larger: ANSI Class 125/150 and a body pressure rating of 150 PSI with a cast iron body, stainless steel disc, EPDM seat, and an extended neck. Disc-to-stem

connection shall utilize a dual-pin method to prevent the disc from settling onto the liner, causing distortion. The shaft shall be supported at four locations by RPTFE bushings.

3. Sizing: Size for a maximum fluid velocity of 12 feet per second (fps).

    a. Two-Position: Line size.
    b. Modulating: [3 PSIG] [5 PSIG] or twice the load pressure drop, whichever is more. Size for the design flow with the disc in a 60-degree-open-position.
    c. Flow Characteristics: Two-way valves shall be modified equal percentage; three-way valves shall be linear.
    d. Close-Off (Differential) Pressure Rating: Combination of actuator and trim shall provide minimum bubble-tight close-off rating of 150 percent of total system head pressure for two-way valves and 100 percent of the total system differential pressure for three-way valves.

L. Pressure dependent Control Valves (160 GPM and below): Use on all primary Air Handlers greater then 5,000 CFM in total supply air.

1. The modulating control valves shall be pressure dependent.
2. The control valves shall accurately control the flow from 0 to 100% full rated flow with an equal percentage flow characteristic. The flow shall not vary more than +/- 5% due to system pressure fluctuations across the valve with a minimum of 5 PSID across the valve.
3. Forged brass body rated at no less than 400 PSI, chrome plated brass ball and stem, female NPT union ends, dual EPDM lubricated O-rings and TEFZEL characterizing disc.
4. Combination of actuator and valve shall provide a minimum close-off pressure rating of 200 PSID.
5. The control valve shall require no maintenance and shall not include replaceable cartridges.
6. All actuators shall be electronically programmed by use of a handheld programming device or external computer software. Programming using actuator mounted switches or multi-turn actuators are NOT acceptable. [Actuators for 3-wire floating (tri-state) on $^1/_2$" – 1" pressure independent control valves shall fail in place and have a mechanical device inserted between the valve and the actuator for the adjustment of flow.] [Actuators for two-position $^1/_2$"-1" pressure independent control valves shall fail in place and have a mechanical device inserted between the valve and the actuator for the adjustment of flow.] [Actuators shall be provided with an auxiliary switch to prove valve position.]
7. The actuator shall be the same manufacturer as the valve, integrally mounted to the valve at the factory via a single screw on a four-way DIN mounting-base.
8. The control valve shall require no maintenance and shall not include replaceable cartridges.
9. The manufacturer shall warrant all components for a period of 5 years from the date of production, with the first two years unconditional.
10. The use of pressure dependent valves piped in parallel to achieve the rated coil flow shall be permitted. Actuators shall be electronically programmed to permit sequencing the flow with a single control output point. The use of external devices to permit sequencing is NOT acceptable.

M. Pressure dependent Control Valves (161 GPM and above): Use on all primary Air Handlers

greater then 5,000 CFM in total supply air.

1. The modulating control valves shall be pressure dependent.
2. The control valves shall accurately control the flow from 0 to 100% full rated flow. The flow shall not vary more than +/- 5% due to system pressure fluctuations across the valve with a minimum of 5 PSID across the valve.
3. Cast iron, steel or bronze bodies rated at no less than 150 PSIG with stainless steel, steel or Teflon, brass or bronze internal parts.
4. Combination of actuator and valve shall provide a minimum close-off pressure rating of 150 PSID.
5. Proportional actuators shall rotate a maximum of 90 degrees. Multi-turn actuators are NOT acceptable.
6. The actuators shall be mounted on the valves at the factory.
7. The pressure dependent valve shall have P/T ports to verify flow.
8. The actuator manufacturer shall warrant all components of the valve assembly for a period of 5 years from the date of production, with the first two years unconditional.

2.9 ELECTRONIC ACTUATORS

A. Electronic Actuators: Directly couple and mount to a stem, shaft, or ISO-style mounting pad designed for minimum 60,000 full-stroke cycles at rated torque

1. Manufacturers:

    a. Belimo (USA), Inc.
    b. Honeywell, Inc.

2. Valves: Size for torque required for valve close off at 150 percent of total system (head) pressure for two-way valves; and 100 percent of pressure differential across the valve or 100 percent of total system (pump) head differential pressure for three-way valves.
4. Coupling: V-bolt and V-shaped, toothed cradle. Single point, bolt or single screw actuator type fastening techniques or direct-coupled actuators requiring field assembly of the universal clamp is not acceptable.
5. Mounting: Actuators shall be capable of being mechanically and electrically paralleled to increase torque if required. Dual mounted actuators using additional anti-rotation strap mechanical linkages, or special factory wiring to function are not acceptable. Actuators in a tandem pair must be 'off the shelf' standard actuators.
6. Overload Protection: Electronic overload or digital rotation-sensing circuitry. End switches to deactivate the actuator at the end of rotation or magnetic clutches are not acceptable.
7. Fail-Safe Operation: Mechanical, spring-return mechanism. Actuators using internal chemical storage systems, capacitors, or other internal non-mechanical forms of fail-safe operation are unacceptable.
8. Power Requirements (Two-Position Spring Return): 24/120/230 V ac.
9. Power Requirements (Modulating): Maximum 10 VA at 24-V ac or 8 W at 24-V dc.
10. Proportional Actuators shall be fully programmable. Control input, position

feedback and running time shall be factory or field programmable by use of a handheld programming device or external computer software Diagnostic feedback shall provide indications of hunting or oscillation, mechanical overload and mechanical travel. Programming shall be through an EEPROM. Programming using actuator mounted switches are not acceptable.

11. Temperature Rating: Minus 22 to plus 122 deg F.
12. Noise Level: Non-spring return actuators shall conform to a maximum noise rating of 45dB(A). Spring return actuators shall not produce more than 62 dB(A).
13. The manufacturer shall warrant all components for a period of 5 years from the date of production, with the first two years unconditional.

2.10 ENCLOSURES

A. All controllers, power supplies and relays shall be mounted in enclosures.

B. Enclosures may be NEMA 1 when located in a clean, dry, indoor environment. Indoor enclosures shall be NEMA 12 when installed in other than a clean environment.

C. Enclosures shall have chrome plated hinges and hardware, powder coat painted white and labeled per the engineered drawings.

D. Provide laminated plastic nameplates for all enclosures in any mechanical room or electrical room. Include location and unit served on nameplate. Laminated plastic shall be 1/8" thick sized appropriately to make label easy to read.

E. All exterior panels shall have a NEMA 4X Stainless Steel Panel, no exceptions.

1. Manufacturers:

a. EMF Company
b. Hoffman Company

PART 3 – EXECUTION

3.1 EXAMINATION

A. Prior to starting work, carefully inspect installed work of other trades and verify that such work is complete to the point where work of this Section may properly commence.

B. Notify the owners' representative in writing of equipment that differs from the specified equipment or if conditions detrimental to the proper and timely completion of the work.

C. Do not begin work until all unsatisfactory conditions are resolved.

3.2 INSTALLATION (GENERAL)

A. Install in accordance with manufacturer's instructions.

B. Provide all miscellaneous devices, hardware, software, interconnections installation and programming required to ensure a complete operating system in accordance with the sequences of operation and point schedules.

3.3 LOCATION AND INSTALLATION OF COMPONENTS

A. Locate and install components for easy accessibility; in general, mount 48 inches above floor with minimum 3'-0" clear access space in front of units. Obtain approval on locations from owner's representative prior to installation.

B. All instruments, switches, transmitters, etc., shall be suitably wired and mounted to protect them from vibration, moisture and high or low temperatures.

C. Identify all equipment and panels. Provide permanently mounted tags for all panels.

D. Provide stainless steel or brass thermowells suitable for respective application and for installation under other sections—sized to suit pipe diameter without restricting flow.

E. Room Temperature Sensor types, such as Stainless Steel Wall Plates with Push Button, VLDs, Microset II, Microset IV, or Micro-Touch Sensors shall be at the discretion of the owner, coordinate with the owner prior to installation.

F. Provide Stainless Steel Wall Plate Sensors with an integral over ride button shall be used in all high occupancy areas including gyms, dining rooms, hallways, etc.

G. On larger Automated Control Valves without an integral over-ride device, provide a 4x4 galvanized junction box rigidly connected directly to the valve actuator with a switch to disconnect power from the actuator allowing for ease of end user over-ride.

3.4 INTERLOCKING AND CONTROL WIRING

A. Furnish and install all wire, conduit, raceways and cable systems required for the complete operation of the Building Management and Control System as outlined in this section. All wiring shall be installed neatly and professionally with this section and in accordance with Division 26 and all National, state and local electrical codes.

B. Provide the completed graphics package prior to Testing and Commissioning the Controls. The EMCS Contractor shall perform a point to point check out and commissioning with the Owner or Owner's Controls Mechanic. The point to point shall begin with disconnecting and verifying every device point, graphic input and control function.

C. All wiring for the Building Management and Control System is specified in this section and includes, but is not limited to;

1. Wiring of Control instruments
2. Wiring of Control Panels
3. Wiring of related power supplies, i.e. transformers.

D. Temperature control wiring shall be jacketed cables installed with or without conduit as

specified below or single conductors installed in conduit. Control wiring shall have minimum 300V insulation for low voltage wiring and 600V insulation for line voltage wiring. Provide shielded low capacitance wire for all communications trunks.

E. Line and low voltage control wiring shall not be installed in the same raceway, magnetic starters and disconnect switches shall not be used as junction boxes. Provide auxiliary junction boxes as required. Coordinate location and arrangement of all control equipment with the owner's representative prior to rough-in.

F. All line voltage control wiring, and low voltage control wiring in the mechanical, electrical, telephone and boiler rooms shall be installed in raceways or conduit. Sensor wiring to wall sensor to be installed in raceway to the top of the wall cavity with a 90 degree bend for stress relief. All other wiring to be installed neatly and inconspicuously per local code requirements. If local code allows, control wiring above accessible ceiling spaces may be run with plenum rated cable (without conduit), provided that the wiring run without conduit is properly supported from the building structure on maximum 5' centers and does not depend upon the ceiling grid or the ceiling support system for support. In other words, do not lay the plenum cable on top of the ceiling grid or tile system. Wires shall be tie wrapped on 5' centers and identified at each termination point. All control wiring, either in conduit or plenum cable shall be installed parallel or perpendicular to building lines. Flexible conduits shall be restricted to lengths no longer than six (6) feet with all transitions to flexible conduit made with a junction box.

G. All control wiring exposed to the weather shall be installed in rigid galvanized schedule 40 conduit. Above ground control wiring shall be installed in rigid galvanized conduit. Below ground wiring shall be installed in schedule 40 PVC conduit.

H. All jacketed cables shall be plenum rated in conduit or in plenum areas.

I. All wiring associated with the Building Management and Control System shall have a unique insulation color and specifically labeled by application. All other wiring shall comply with Division 26 insulation identifiers.

1. Yellow Jacket with "device' printed every 12 inches on center – 18 AWG 2 Conductors, stranded bare copper.
2. Yellow Jacket with "device" printed every 12 inches on center – 18 AWG 3 Conductors, stranded bare copper.
3. Raspberry Jacket with "MSTP" printed every 12 inches on center – 22 AWG shielded 2 conductors, stranded bare copper.

J. Panel Wiring:

1. All wiring in panel cans shall be run inside of plastic raceways (Panduit) with covers. (Plastic double sided sticky back's are NOT allowed)
2. All wires terminated to a panel device shall have a Dura-Label Brand Label (Model # DL-4TTP) with computerized printout of the following:

    a. Description of Device Wire
    b. I/O Point Name
    c. Terminal landing identifier.
    d. Stick on, roll tape or any other type of identifier shall not be allowed.

e. Label Size to be a minimum of 1/2" wide by 2" long.
f. Do not shrink the label on the wire, leave loose for future service.
g. Hand written labels, of any type or forbidden.

3. Labels

a. All panel cans shall have a Phenolic Label on the exterior of the panel can to clearly identify the panel as outlined in the engineered drawings.
b. Label size minimum to be 2" x 3"
c. Printed labels are not allowed on panel exteriors.
d. Panel Labels to be riveted to the panel.
e. Labels for devices on the panel interior shall be computer generated,
f. Label each panel device.

PART 4 – SEQUENCE OF OPERATIONS

4.1 OVERVIEW

A. Each Building served by Southern University's Central Plant should have the following monitoring and control points to control the chilled water campus supply flow into the building efficiently. These points are required at each tertiary loop to stage necessary cooling capacity at the central plant accordingly.

Tertiary Loop							
POINT NAME	HARDWARE POINTS				SOFTWARE POINTS		NOTES
	AI	AO	BI	BO	AV	BV	
Campus Supply Temperature	X						
Campus Return Temperature	X						(1)
Campus Loop DP	X						
Building Flow - Return	X						(2)
Building Supply Temp	X						
Building Return Temp	X						(1)
CHW Flow Control Valve		X					
Loop Control Valve Position	X						
Return Water ΔT Setpoint					X		
NOTES: (1) 100 Ohm Platinum Sensor with 4-20mA transmitter required (2) Insertion Type, Magnet Flow Required							

B. The DDC controls for the Tertiary loops must communicate directly with the Central Plant control system installed at the Ruffin Paul Sr. Central Plant to ensure accurate and time sensitive data. All programming, trending, alarming and graphical changes to the tertiary loop controls needs to be accomplished through the Compass Server for future adjustment and tuning.

4.2 SEQUENCE OF OPERATION

A. The Building Decoupler Loop shall measure the following points for accurate control (see points list)

B. Using a PI loop, the Return Water Flow Control Valve shall modulate to maintain a CHW Flow Setpoint.

C. The CHW Flow Setpoint will be determined by adjusting up and down from the result of a PID loop which is trying to achieve a 0.5°F temperature differential between the Building Return Temperature and the Campus Return Temperature (after the decoupler)

1. As the Temperature Differential changes, the flow setpoint will be incrementally adjusted to adjust for the changes. This control loop should ensure that the campus chilled water flow is always slightly greater than the building chilled water flow forcing the campus supply water to move through the decoupler to the Campus Return Side. This eliminates the possibility of the building return water entering the building supply water loop.

D. The Central Plant pumps shall monitor the Campus Differential Pressure at each building and ramp to maintain the building with the lowest DP off setpoint.

E. As the Flow Control Valves at each of the building decouplers modulate closed, the differential setpoint shall reset down until the minimum valve position is above 75% open (adj.)

F. As changes are made to the chilled water decoupler and tertiary loops at each building, the central plant programming must be adjusted and commissioned to incorporate the new data points and control sequencing for proper staging of the of the Associated Campus Loop

END OF SECTION 230900

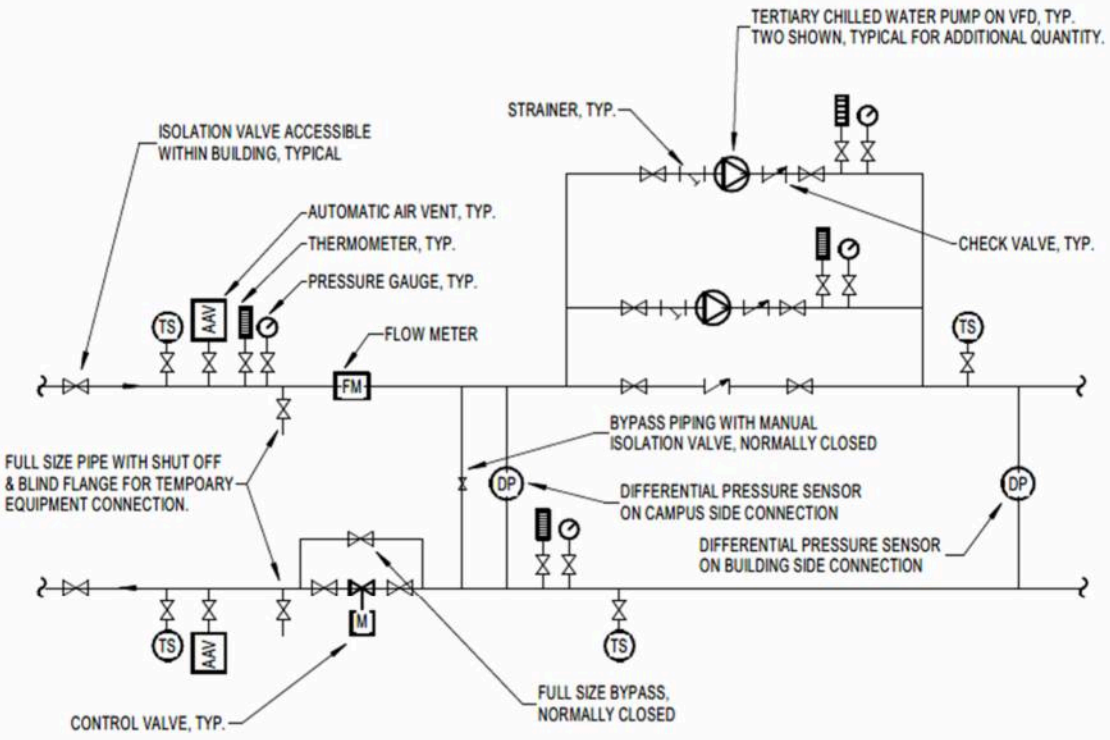

15 DETAIL - TYPICAL TERTIARY CHILLED WATER PIPING DIAGRAM
N.T.S.

SECTION 232113 - HYDRONIC PIPING

PART 1 - GENERAL

1.1 WORK INCLUDED

A. Pipe and Pipe Fittings

B. Heating Water Piping System

C. Chilled Water Piping System

1.2 RELATED WORK

A. Section 230000 - General Provisions

B. Section 230516 - Expansion Compensation

C. Section 230529 - Anchors and Supports

D. Section 230553 - Mechanical Identification

E. Section 230700 - Piping and Equipment Insulation

1.3 REFERENCES

A. ASTM A53 - Pipe, Steel, Black and Hot-Dipped Zinc Coated, Welded and Seamless.

B. ASTM A234 - Pipe Fittings of Wrought Carbon Steel and Alloy Steel for Moderate and Elevated Temperatures.

1.4 REGULATORY REQUIREMENTS

A. Conform to ANSI/ASME B31.9.

1.5 QUALITY ASSURANCE

A. Valves: Manufacturer's name and pressure rating marked on valve body.

B. Welding Materials and Procedures: Conform to ANSI/ASME Sec. and applicable State Labor Regulations.

1.6 SUBMITTALS

A. Submit shop drawing and product data under provisions of Section 013000 – Administrative Requirements.

B. Include data on pipe materials, pipe fittings, valves, and accessories.

1.7 DELIVERY, STORAGE, AND HANDLING

A. Deliver products to site under provisions of Section 016000 – Product Requirement.

B. Store and protect products under provisions of Section 016000 – Product Requirement.

PART 2 - PRODUCTS

2.1 HEATING WATER PIPING

A. Steel Pipe: ASTM A53, Schedule 40 ERW.

B. Piping terminal heating coils (3' max.) Type M hard drawn copper, ASTM 88, wrought copper fittings.

2.2 CHILLED WATER PIPING - (ABOVE GROUND)

A. Steel pipe: ASTM A53, Schedule 40, ERW.

2.3 EQUIPMENT DRAINS AND OVERFLOWS

A. For piping materials see piping section.

B. All A.H. unit drains shall have cleanouts.

C. All A.H. unit auxiliary drains shall be piped separately from primary drains to floor drains.

D. Drain piping (A.H. units) copper tubing type M, hard drawn, ASTM 88 wrought copper fittings.

2.4 FLANGES, UNIONS, AND COUPLINGS

A. Pipe Size 2 inches and under: 150 psig malleable iron unions for threaded ferrous piping; bronze unions for copper pipe, soldered joints.

B. Pipe size over 2 inches: 150 psig forged steel slip-on flanges for ferrous piping; bronze flanges for copper piping; 1/16 inch thick preformed neoprene.

2.5 VALVES

A. For valves in hydronic systems, see Valve Section 230523.

2.6 RELIEF VALVES

A. Bronzed body, teflon seat, stainless steel stem and springs, automatic.

PART 3 - EXECUTION

3.1 PREPARATION

A. Ream pipe and tube ends. Remove burrs. Bevel plain end ferrous pipe.

B. Remove scale and dirt on inside and outside before assembly.

C. Prepare piping connections to equipment with flanges or unions.

D. After completion, fill, clean, and treat systems.

3.2 INSTALLATION

A. Route piping in orderly manner, plumb and parallel to building structure, and maintain gradient.

B. Install piping to conserve building space, and not interfere with use of space and other work.

C. Install piping to allow for expansion and contraction without stressing pipe, joints, or connected equipment.

D. Provide clearance for installation of insulation, and access to valves and fittings.

E. Provide access where valves and fittings are not exposed.

F. Slope piping and arrange systems to drain at low points. Use eccentric reducers to maintain top of pipe level.

G. Where pipe support members are welded to structural building framing, scrape, brush clean, and apply one coat of zinc rich primer to welding.

H. Prepare pipe and fittings, supports, and accessories for finish painting. Refer to Section 099000 – Painting and Coating.

3.3 APPLICATION

A. Install brass male adapters each side of valves in copper piped system. Sweat solder adapters to pipe.

B. Install ball or butterfly valves for throttling, bypass, or manual flow control services.

C. Provide spring loaded check valves on discharge of condenser water pumps.

D. Use plug cocks for throttling service. Use non-lubricated plug cocks only when shut-off or isolating valves are also provided.

E. Use lug end butterfly valves to isolate equipment.

F. Provide 3/4 inch gate or ball drain valves at main shut-off valves, low points of piping, bases of vertical risers, and at equipment. Pipe to drain if specified on drawings.

END OF SECTION 232113

SECTION 232114 - UNDERGROUND PRE-INSULATED PIPING

PART 1 - GENERAL

1.1 RELATED DOCUMENTS:

A. Drawings and general provisions of the Contract, including General and Supplementary Conditions and Division I Specifications Sections, apply to this section.

B. SUMMARY: Extent of each type of underground pre-insulated piping Systems is indicated on the drawings and by provisions of this section.

1.2 DESCRIPTION:

A. Work Included:

1. Underground hot water heating piping.
2. Underground chilled water piping

1.3 SUBMITTALS:

A. General: All submittals shall comply with the requirements of Division 1 Sections and Section 230000.

B. Product Data: Data shall be submitted for the following:

1. List of installations.
2. System.
3. Installation Instructions.
4. Anchor and thrust block details.
5. Layout drawing.
6. Branch take-off details.
7. Floor and wall seals.
8. Valves.

C. QUALITY ASSURANCE:

1. American Society for Testing and materials (ASTM):
2. Standard A-53, Pipe, Steel, Black and Hot Dipped Zinc Coated Welded and Seamless.
3. Standard A-234, piping Fittings of Wrought Carbon Steel and Alloy Steel for Moderate and elevated temperature.
4. Standard B-88, Seamless Copper Water Tube.
5. Standard D-1784, Rigid Poly Vinyl Chloride (PVC) Compounds and Chlorinated Poly Vinyl Chloride (CPVC) Compounds.

PART 2 - PRODUCTS

2.1 MANUFACTURERS

A. Certain items in this Specification are listed by manufacturer and/or manufacturer=s model number to establish general style, type, character, and quality of product desired. Similar items manufactured by other than those listed will be considered, providing submittals are made according to Pre-Bid Approval requirements of Instructions to Bidders.

B. Where no manufacturer or model number are given, any product meeting performance or design criteria, or referenced trade association standard may be used and Pre-Bid approval is not required.

2.2 UNDERGROUND PIPING SYSTEMS:

A. General

1. All underground pre-insulated piping systems shall be the product of one manufacturer.
2. Manufacturers shall be:
   a. Thermacor Process, LP
   b. Thermal Pipe Systems, Inc. (TPS)

B. Piping Systems

1. The piping systems shall be factory fabricated, pre-insulated, and jacketed underground piping systems.
2. Systems shall be:
   a. Process, L.P.
   b. Pipe Systems, Inc. (TPS)

C. Carrier Pipe

1. Chilled Water and Heating Hot Water Piping shall be a schedule 40 black steel, ASTM A-53, Grade B. Joints shall be butt-welding type, except on pipe sizes 2 inches and smaller, joints may be socket welded. Fitting shall be standard weight butt welding type ASTM A-234, with long radius.

D. Insulation

1. Insulation shall be:
   a. Type: Urethane Foam
   b. K Factory: 0.13 BTU/(HR) (SQ. FT.) (F/IN)
   c. Density: 2.0 lb/CUBIC FOOT
   d. Closed Cell Content: 90 % (minimum)- no open cell foam permitted of 10% or more.
2. Minimum Thickness:

a. Pipe Size, In.	1@-3@	4@-6@	8@-12@	14@-18@
b. Thickness 1@		1-1/2@	2@	3@

E. The insulation shall be foamed between the pipe and jacket and shall be bonded to the carrier pipe and casing surfaces.

F. Outer Casing

1. The outer casing pipe shall be high density polyethylene. The minimum wall thickness shell be 150 mils. The jacket closures shall be a cylindrical form with a single longitudinal split and shall be the same thickness as the casing. Pressure testable joint closures to be fusion welded. Must maintain 5 lb test.

G. Fittings

1. Fittings shall be factory prefabricated and pre-insulated. Fitting covers shall be molded one (2) piece. No miters, tape, or zeston 2 type covers are permitted. Fitting covers to be minimum of 150 mils thick.

PART 3 – EXECUTION

3.1 EXCAVATION, TRENCHING AND BACKFILLING:

A. Refer Architectural Section Excavating, Filling, Grading.

3.2 INSTALLATION

A. All materials shall be unloaded, stored and installed in accordance with the manufacturers' recommendations to conform with the contract documents.

B. Where pre-insulated piping passes through metal sleeves in walls and floors, the insulations and jacketed system shall extend continuously through such sleeves.

C. Open end pipe shall be capped during installation to keep dirt and other foreign material out of system.

D. Expansion loops and bends shall be provided in accordance with the manufacturer's standard.

E. Welded joints shall be fusion welded. Changes in direction of piping shall be made with welded fittings. Mitering or notching to form elbows and tees shall not be permitted.

F. Joints between pipe sections and joints between conduit pipe and fittings shall be made in accordance with the manufacturer's written instructions. Joints shall include closure sleeve, insulation, and coatings or wrapping as applicable. Joint materials shall be the product of the system manufacturer and shall be the same product as specified for the system.

G. The vapor barrier jacket shall have the vapor barrier extended continuously across all joints.

H. Anchors and thrust blocks shall be installed in accordance with manufacturer's recommendations.

3.3 TESTING

A. Prior to closure of field joints, the carrier pipe shall be hydrostatically tested at 1-1/2 times the system operating pressure or 150 psig, whichever is greater, for a period of not less than 2 hours. No loss in pressure will be permitted. Any defective sections shall be replaced and any defected welds repaired. System shall be retested until systems are tight.

B. Materials, equipment, and labor required to test the system shall be the responsibility of the contractor.

3.4 CERTIFICATION:

A. During the testing period, a factory representative of the system manufacturer shall be present to witness each test. If systems are tested in stages, the factory representative's presence shall be required at each stage.

B. Prior to backfilling, a factory representative shall review the installation for deficiencies. Any deficiencies found shall be corrected by the contractor. No backfilling shall occur until written certification of acceptance installation is provided by the manufacturer to the engineer.

END OF SECTION 232114

SECTION 232116 - HYDRONIC SPECIALITIES

PART 1 - GENERAL

1.1 WORK INCLUDED

A. Air vents.

B. Flow indicators, controls, meters.

1.2 RELATED WORK

A. Section 232113 - Hydronic Piping

1.3 REFERENCES

A. ANSI/ASME - Boilers and Pressure Vessels Code.

1.4 REGULATORY REQUIREMENTS

A. Conform to ANSI/ASME Boilers and Pressure Vessels code Section 8D for manufacturer of tanks.

1.5 QUALITY ASSURANCE

A. Manufacturer: For each product specified, provide components by same manufacturer throughout.

1.6 SUBMITTALS

A. Submit shop drawings and product data under provisions of Section 013000 – Administrative Requirements.

B. Submit shop drawings and product data for manufactured products and assemblies required for this project.

C. Include component sizes, rough-in requirements, service sizes, and finishes. Include product description, model and dimensions.

1.7 OPERATION AND MAINTENANCE DATA

A. Submit operation and maintenance data under provisions of Section 01 70 00 – Execution Requirements.

B. Include installation instruction, assembly views, lubrication instructions, and replacement parts lists.

1.8 DELIVERY, STORAGE, AND HANDLING

A. Deliver products to site under provisions of Section 016000.

PART 2 - PRODUCTS

2.1 MANUFACTURERS

A. Certain items in this Specification are listed by manufacturer and/or manufacturer's model number to establish general style, type, character, and quality of product desired. Similar items manufactured by other than those listed will be considered, providing submittals are made according to Pre-Bid Approval requirements of Instructions to Bidders, page IB-3, Paragraph 4.3.

B. Where no manufacturer or model number are given, any product meeting performance or design criteria, or referenced trade association standard may be used but Pre -Bid Approval is required.

2.2 AIR VENTS

A. Manual Type: Short vertical sections of 2 inch diameter pipe to form air chamber, with 1/8" brass needle valve at top of chamber.

B. Float Type: Brass or semi-steel body, copper float, stainless steel valve and valve seat; suitable for system operating temperature and pressure, with isolating valve.

C. Washer Type: Brass with hydroscopic fiber discs, vent ports, adjustable cap for manual shut-off, and integral spring loaded ball check valve.

2.3 STRAINERS

A. Size 2" inch and under: Screwed brass or iron body for 175 psig working pressure, Y pattern with 1/32 inch stainless steel perforated screen.

B. Size 2-1/2" to 4" flanged iron body for 175 psig working pressure, Y pattern with 1/8" stainless steel perforated screen.

C. Size 5 inch and larger: Flanged iron body for 175 psig working pressure, Y pattern with 1/8" stainless steel perforated screen.

2.4 FLOW METERS

A. Heavy duty, 316 stainless steel pitot tube type flow measuring sensor with instrument

connections with valves 1/4" SAE flare by 1/8" female NPT brass valves on 1/8" male NPT fittings.

B. Portable meter consisting of case containing one, 3 percent accuracy pressure gauge with 0-60 feet pressure range; two, 3 percent accuracy pressure gauges with 0-135 inches and 0-60 feet pressure ranges for 500 psig maximum working pressure, color coded hoses for low and high pressure connections, and connectors suitable for connection to read-out valves.

2.5 ACCEPTABLE MANUFACTURERS

A. Annubar with Eagle Eye flow meter.

B. PRESCO Annular with model GM meter.

PART 3 - EXECUTION

3.1 INSTALLATION AND APPLICATION

A. Install specialties in accordance with manufacturer's instructions to permit intended performance.

B. Where large air quantities can accumulate, provide enlarged air collection standpipes.

C. Provide manual air vents at system high points and as indicated.

D. For automatic air vents in ceiling spaces or other concealed locations, provide vent tubing to nearest drain.

E. Provide valved drain and hose connection on strainer blow down connection.

END OF SECTION 232116

SECTION 232123 - PUMPS

PART 1 - GENERAL

1.1 WORK INCLUDED

A. This section includes all pumps except where integral with manufactured piece of equipment.

1.2 RELATED WORK

A. Section 232113 - Hydronic Piping

B. Section 230523 - Valves

C. Section 230529 - Supports and Anchors

D. Section 230700 - Piping and Equipment Insulation

E. Section 221000 - Plumbing Piping

1.3 SUBMITTALS

A. Submit shop drawings under provisions of Sections 013000 – Administrative Requirements & 230000 – General Mechanical.

B. Submit certified pump curves showing pump performance characteristics with pump and system operating point plotted. Include NPSH curve when applicable.

PART 2 - PRODUCTS

2.1 ACCEPTABLE MANUFACTURER'S FRAME MOUNTED END SUCTION PUMPS

A. Aurora 340 Series

B. Bell & Gossett Model 1510

C. Taco KV/KS Series

D. Paco LF Series

E. Armstrong 4030 Series

F. Patterson VIL Series

G. Pump supplier shall be an authorized factory distributor for equipment supplied.

2.2 GENERAL

A. Statically and dynamically balance rotating parts.

B. Construction to permit complete servicing without breaking piping or motor connections.

C. Pumps to operate at 1750 rpm unless specified otherwise.

D. Pump connections to be flanged.

2.3 BASE MOUNTED PUMPS (Hot water heating)

A. Type: Centrifugal, single stage, direct connected.

B. Casing: Cast iron, split volute, single or double suction, renewable bronze wearing rings, flanged suction and discharge.

C. Impeller: Bronze, fully enclosed, keyed to shaft.

D. Shaft: High grade alloy steel with copper, bronze or stainless steel shaft sleeves.

E. Bearing: Oil lubricated roller or ball bearings with oil reservoirs. Provide oil seal and integral dirt and water seal at each end of reservoir.

F. Drive: Flexible coupling with coupling guard.

G. Seals: Pumps shall have mechanical seals and hardened 316 stainless steel short sleeve.

H. Baseplate: High grade heat treated cast iron or reinforced heavy steel with integral drain rim grout base.

I. Non overloading.

J. Bearing shall be grease proof bearing cartridges. Shaft deflection shall not exceed .002 at stuffing box.

K. Bearings shall be designed for average life of ten years and bearing arms are to be cast integral with lower half of casing to assure proper bearing alignment.

L. Pumps shall be horizontal split case with casing suitable for 250 psi case wearing pressure. (Chilled water, heating water pumps - end suction type).

M. Impellers shall not exceed 90% of maximum published diameter.

N. Furnish two (2) spare seals for each pump.

O. Pump impeller diameter shall be selected such that break hp will not exceed specified hp at any operating point which exists on that particular impeller diameter pump curve.

PART 3 - EXECUTION

3.1 INSTALLATION

A. Provide drains for bases and stuffing boxes piped to and discharging into floor drains.

B. Provide air cock and drain connection and horizontal pump casings.

C. Decrease from line size, with long radius reducing elbows or reducers. Support piping adjacent to pump such that no weight is carried on pump casings. Provide supports under elbows on pump suction and discharge line sized 4 inches and over.

D. Ensure pumps operate at specified system fluid temperatures without vapor binding and cavitation, are maximum efficiency curve.

E. Qualified millwright to check, align, and certify base mounted pumps prior to start-up.

3.2 PUMP SCHEDULE: See Plans.

END OF SECTION 232123

SECTION 232500 - CHEMICAL (WATER) TREATMENT

PART 1 - GENERAL

1.1 WORK INCLUDED

A. Cleaning of piping systems.

B. Chemical feeder equipment.

C. Treatment for closed systems.

D. Treatment for open system.

1.2 PRODUCTS FURNISHED BUT NOT INSTALLED UNDER THIS SECTION

A. Section 232113 - Hydronic Piping: Water coupon rack, by-pass (pot) feeder.

1.3 RELATED SECTIONS

A. Section 232113 - Hydronic Piping

B. Section 232116 - Hydronic Specialties

1.4 SUBMITTALS

A. Submit shop drawings and product data under provisions of Section 013000 – Administrative Requirements.

B. Submit shop drawings indicating system schematics, equipment locations, and controls schematics.

C. Submit product data indicating chemical treatment materials, chemicals, and equipment.

D. Submit manufacturer's installation instructions under provision of Section 013000 – Administrative Requirements.

E. Submit reports indicating start-up of treatment systems are completed and operating properly.

F. Submit reports indicating analysis of system water after cleaning and after treatment.

1.5 OPERATION AND MAINTENANCE DATA

A. Submit operation and maintenance data under provisions of Section 017000 – Execution

Requirements.

B. Include data on chemical feed pumps, agitators, and other equipment including spare parts lists, procedures, and treatment programs.

C. Include step by step instructions on test procedures including target concentration.

1.6 QUALIFICATIONS

A. Manufacturer: Company specializing in manufacturing the products specified in this Section. Company shall have local representatives with water analysis laboratories and full time service personnel.

1.7 REGULATORY REQUIREMENTS

A. Conform applicable EPA code for addition of non-potable chemical to building mechanical systems, and for delivery to public sewage systems.

1.8 MAINTENANCE SERVICE

A. Furnish service and maintenance of treatment systems for one (1) year from date of Substantial Completion.

B. Provide monthly technical service visits to perform field inspection and make water analysis on site. Detail findings in writing on proper practices, chemical treating requirements, and corrective actions needed. Submit two (2) copies of field service report after each visit.

C. Provide laboratory and technical assistance service for warranty period.

D. Include two hour training course for operating personnel, instructing them on installation, care, maintenance, testing, and operation of water treatment systems. Arrange course at start-up of systems.

E. Provide onsite inspections of equipment during scheduled or emergency shutdown to properly evaluate success of water treatment program, and make recommendations in writing based upon these inspections.

1.9 MAINTENANCE MATERIALS

A. Submit maintenance materials under provisions of Section 01 70 00.

B. Provide sufficient chemicals for treatment and testing during warranty period.

1.10 APPROVAL OF PRODUCT PRIOR TO BIDDING

A. Refer to Section 016000, Material and Equipment, paragraph, 1.4, 1.4A and 1.4B for

product prior approval requirements.

PART 2 - PRODUCTS

2.1 MANUFACTURERS

A. Certain items in this Specification are listed by manufacturer and/or manufacturer's model number to establish general style, type, character, and quality of product desired. Similar items manufactured by other than those listed will be considered, providing submittals are made according to Pre-Bid Approval requirements of Instructions to Bidders.

B. Where no manufacturer or model number are given, any product meeting performance or design criteria, or referenced trade association standard may be used and Pre-Bid approval is not required.

2.2 MATERIALS

A. System Cleaner:

1. Liquid alkaline compound with emulsifying agents and detergents to remove grease and petroleum products.
2. Algicide.

B. Closed System Treatment (Water):

1. Sequestering agent to reduce deposits and adjust ph (polyphosphate).
2. Corrosion inhibitors: (liquid) boron-nitrite and borax, sodium totyltriazole, low molecular weight polymers, phosphonates, sodium molybdate, or sulphites.
3. Conductivity enhancers: phosphates or phosphonates.

C. Condenser Water System Treatment (Cooling Towers)

1. Sequestering agent to inhibit scaling; phosphonates, sodium polyphosphates, lignin derivatives, synthetic polymer polyelectrolytes, or organite phosphates.
2. Acid to reduce alkalinity and ph.
3. Corrosion inhibitor: Zinc-phosphate, phosphonate-phosphate, phosphonate-molybdate and phosphonate silicate, sodium tolyltriazole, or low molecular weight polymers.
4. Algicide: Chlorine release agents such as sodium hypochlorite or calcium hypochlorite, or microbiocides such as quaternary ammonia compounds, tributyl tin oxide, methylene bis (thiocyanate), or isothiazolones.

2.3 EQUIPMENT

A. By-pass pot feeder: Quick opening for working pressure of 175.

B. Drip Feeder: Plastic reservoir with coil of capillary tubing with probe, weight, charging syringe, and clip.

C. Solution Metering Pump: Positive displacement, diaphragm pump with adjustable flow rate, thermoplastic construction, continuous-duty fully enclosed electric motor and drive, and built in relief valve.

D. Solution Tanks: 50 gallon capacity, polyethylene, self-supporting, 5 gallon 3.8 graduated markings; molded fiberglass cover with recess for mounting pump, agitator, and liquid level switch.

E. Agitator: Totally enclosed, explosion proof electric motor, stainless steel clamp and motor mount, 5/8 inch diameter Type 316 stainless steel propeller.

F. Liquid Level Switch: Polypropylene housing with integrally mounted PVC air trap, receptacles for connection to metering pump, and low level alarm.

G. Conductivity Controller: Packaged monitor controller with solid state circuiting, five percent accuracy, linear dial adjustment, built-in calibration switch, on-off switch and circuit and recorder.

H. Water Meter: Displacement type cold water meter with sealed, tamper-proof magnetic drive, impulse contact register, single pole, double throw dry contact switch.

I. Solenoid Valves: Forged brass body globe pattern, normally open or closed as required, general purpose solenoid enclosure, and continuous duty coil.

J. Timers: Electronic timers, infinitely adjustable over full range, 150 second and five minute range, mounted together in cabinet with hands-off-automatic switches and status lights.

2.4 TEST EQUIPMENT

A. Provide white enamel test cabinet with local and fluorescent light, capable of accommodating 4-10 zeroing titrating burettes and associated reagents.

B. Provide the following test kits:

1. Alkalinity titration test kit.
2. Chloride titration test kit.
3. Sulphite hardness titration test kit.
4. Total hardness titration test kit.
5. Low phosphate test kit.
6. Conductivity bridge, range 0-10,000 microhms.
7. Creosol red ph slide complete with reagent.
8. Portable electronic conductivity meter.
9. High nitrite test kit.

PART 3 - EXECUTION

3.1 PREPARATION

A. Systems shall be operational, filled, started, and vented prior to cleaning. Use water meter to record capacity in each system.

B. Place terminal control valves in open position during cleaning.

3.2 CLEANING SEQUENCE

A. Add cleaner to closed systems at concentration as recommended by manufacturer.

B. Hot Water Heating Systems: Apply heat while circulation slowly raising temperature to 160 degree F and maintain for 12 hours minimum. Remove heat and circulate to 100 degrees F or less; drain systems as quickly as possible and refill with clean water. Circulate for 6 hours at design temperatures, then drain. Refill with clean water and repeat until system cleaner is removed.

C. Chilled Water Systems: Circulate for forty eight hours, then drain systems as quickly as possible. Refill with clean water, circulate for 24 hours, then drain. Refill with water and repeat until system cleaner is removed.

D. Use neutralizer agents on recommendation of system cleaner supplier and approval of Architect.

E. Flush open systems with clean water for one hour minimum. Drain completely and refill.

F. Remove, clean, and replace strainer screens.

G. Inspect, remove sludge, and flush low points with clean water after cleaning process is completed. Include disassembly of components as required.

3.3 INSTALLATION

A. Install in accordance with manufacturer's instructions.

3.4 CLOSED SYSTEM TREATMENT

A. Provide one bypass feeder on each system. Install isolating and drain valves and necessary piping. Install around globe valve downstream of circulating pumps unless indicated otherwise.

B. Introduce closed system treatment through bypass feeder when required or indicated by test.

C. Provide 3/4 inch water coupon rack around circulating pumps with space for 4 test specimens.

3.5 CONDENSER WATER SYSTEMS (COOLING TOWERS)

A. Provide automatic condenser water control systems for inhibitor feed, blowdown and

biocide feeds. Inhibitor application shall be meter activated, blowdown shall be conductivity activated, and biocide shall be meter fed with blowdown locked out to insure biocide retention time.

B. Control system shall incorporate solid state integrated circuits and digital LED displays, in NEMA-12 steel enclosure. Provide gasketed and lockable door.

C. Base dissolved solids control on conductivity and include:

1. LED digital readout display (microhm/cm).
2. Temperature compensated sensor probe adaptable to sample stream manifold.
3. High, low, normal conductance indicator lights (LED).
4. High or low conductance alarm light (flash or steady switch shall have silence position.
5. Illuminated legend shall indicate "ALARM" whenever alarm condition exists.
6. Hand-off-automatic switch for solenoid bleed valves.
7. Illuminated legend shall indicate "BLEED" when valve is operated.
8. Adjustable hysteresis or dead-band (internal).

D. Base inhibitor feed control on make-up volume and include:

1. Solid state counter (1-125 field selectable).
2. Solid state timer (adjustable 1/4 to 5 minutes).
3. Test switch.
4. Hand-off-automatic switch for chemical pump.
5. Illuminated legend shall indicate "FEED" when pump is activated.
6. Solid state lock-out timer (adjustable 1/4 to 3 hours) and indicator light. Lock-out timer shall deactivate the pump and activate alarm circuits.
7. Panel totalizer (amount of makeup), electro-mechanical type.

E. Biocide programmer to include:

1. 24 hour timer with 14 day skip feature to permit activation any hour of the day.
2. Precision solid state bleed lock-out timer (0-9 hours) and biocide pump timer (0 - 2 - 1\4 hours), clock controlled.
3. Solid state alternator to enable the use of two different formulations.
4. Digital display of the time of day (24 hours).
5. LED display of day of week (14 days).
6. Fast and slow clock set controls (internal).
7. Battery back-up so clock is not disturbed by power outages, quartz timekeeping accuracy.
8. Hand-off-automatic switches for biocide pumps.
9. Illuminated legend shall indicate "BIOCIDE A" or "BIOCIDE B" when pump is activated.

F. Provide water meter on system make-up, wired to control system.

G. Provide solution pumps to feed sequestering agent and corrosion inhibitor from solution tank into condenser water supply to tower. Provide agitator as required.

H. Provide conductivity controller to sample condenser water and operate 11 inch solenoid bleed valve and piping to blow down controller sampler wired to open when condensing water pump is operating.

I. Introduce algicide to tower by intermittent slug feed.

J. Provide liquid level switch in each solution tank to deactivate solution pump and agitator, and sound local alarm bell.

K. Provide 3/4 inch water coupon rack around circulating pumps with space for 4 test specimens.

END OF SECTION 232500

SECTION 233100 - DUCTWORK

PART 1 - GENERAL

1.1 WORK INCLUDED

A. Low pressure duct.

B. Medium and high pressure duct.

C. Fire and Smoke Dampers

1.2 RELATED WORK

A. Section 230523 - Supports and Anchors

B. Section 230700 - Piping and Equipment Insulation

C. Section 233600 - Air Terminal Units

D. Section 233700 - Air Inlets and Outlets

E. Section 230593 - Testing and Balance

1.3 REFERENCES

A. ASHRAE, 2009 Fundamentals, Chapter 21.

B. ASHRAE, 2008 Equipment, Chapter 18.

C. NFPA 90A, 90B.

D. H.V.A.C. Duct Construction Standards - SMACNA 1995.

1.4 DEFINITIONS

A. Duct sizes: Inside clear dimensions for wrapped ducts, maintain sizes inside lining. Metal to metal sizes for internally lined ductwork.

B. Low Pressure: Three pressure classifications: 1/2" WG positive or negative static pressure and velocities less than 2,000 fpm, 1" WG positive or negative static pressure and velocities less than 2,500 fpm and 2" WG positive or

C. Medium Pressure: Three pressure classifications: 3 inch WG positive or negative static pressure and velocities less than 4,000 fpm, 4" WG positive static pressure and velocities greater than 2,000 fpm. 6" WG positive static pressure and velocities greater than 2,000

fpm.

1.5 REGULATORY REQUIREMENTS

A. Construct ductwork to NFPA 90A and NFPA 90B Standards.

B. Store and protect products under provisions of Section 01 60 00.

C. Construct ductwork to International Mechanical Code Standards

PART 2 - PRODUCTS

2.1 MEDIUM PRESSURE DUCTWORK

A. All ductwork on high velocity systems shall be flat oval and/or round type constructed as per latest edition of ASHRAE Guide and as shown on the plans, and shall be absolutely air tight. Round ductwork as shown and required shall be furnished.

B. Metal gauges for single wall round and flat oval duct shall be as follows:

1.	ROUND DUCTS		
	Duct diameter	Spiral Pipe Longitudinal	Fittings and seam pipe
	3" thru 14"	26	24
	15" thru 26"	24	22
	27" thru 36"	22	20
	37" thru 50"	20	20
2.	FLAT OVAL DUCTS		
	Major Dimension	Spiral Pipe Longitudinal	Fittings and seam pipe
	Up to 24"	24	20
	25" thru 36"	22	20
	37" thru 48"	22	18
	49" thru 60"	20	18
	61" thru 70"	20	16

C. Longitudinal joints shall be grooved seam type; and joints shall be male and female slip type, with maximum tolerance of 1/64" between outside diameter of male and inside diameter of female end.

D. Interior of all ductwork shall be smooth and each length shall be carefully inspected after construction and any defects removed.

E. Forty-five (45) degree elbows shall be of the three-piece construction. Ninety degree (90) elbows shall be five-piece construction. Center line radius of elbows shall not be less than 1-1/2 times the pipe diameter.

F. As shown on plans, take-off to mixing boxes are 45 degree take-off.

G. Ample length of duct, branch connection, tees, 45 degree and 90 degree elbows shall be submitted for approval of design and workmanship before any construction is commenced.

H. Mastic shall be applied to male duct end, joints pushed together surplus mastic removed and the joint finished with hard cast "iron grip".

I. All connections between ductwork and attenuating chambers shall be made with pre-insulated flexible air duct, minimum 24" in length.

J. Flexible duct shall be clamped to round pipe of branch connections and attenuator chamber stub with clamps, with mastic or tape applied to the male ends of the stubs before insertion into the flexible duct. Mastic and tape must comply with UL181A & UL181B.

K. All ductwork shall be thoroughly supported and braced according to latest edition of ASHRAE Guide & SMACNA Manual.

L. On completion of medium pressure duct and before connection of mixing boxes to system, all open ends shall be tightly closed and air pumped into duct system until an air pressure of one and a half times external static pressure specified for the air handling unit serving this ductwork is obtained.

M. This pressure shall be maintained until all joints are inspected and examined for leaks.

N. All leaks shall be repaired immediately.

O. The above work shall be completed before any furring or ceiling work is started by General Contractor.

P. Flexible connections shall be provided in high pressure supply ductwork between the duct and equipment.

Q. All supply flat oval ductwork thru first 20 feet of A.H. units shall be double wall insulated with perforated liner sound attenuating duct and fittings. (VAV Units only)

2.2 INSULATED MEDIUM AND HIGH PRESSURE FLEXIBLE DUCT

A. Provide where indicated on drawings Flexmaster Type 4M UL181 Class I Air Duct. Approved equal: Thermaflex model MK-C or prior approved equal with sample submitted during prior approval stage.

B. The duct shall be constructed of a heavy coated fiberglass cloth fabric supported by helical wound galvanized steel. The fabric shall be mechanically locked to the steel helix without the use of adhesives or chemicals.

C. The internal working pressure rating shall be at least 12" w.g. positive and 5" w.g. negative with a bursting pressure of at least 2½ time the working pressure.

D. The duct shall be rated for a velocity of at least 5500 feet per minute.

E. The duct must be suitable for continuous operation at a temperature range of -20° F to +250°

F. Factory insulate the flexible duct with fiberglass insulation. The R value shall be at least 5 minimum (R-4.2 is not acceptable) at a mean temperature of 75° F.

G. Cover the insulation with a fire retardant metalized vapor barrier jacket reinforced with crosshatched scrim having a permeance of not greater than 0.05 perms when tested in accordance with ASTM E96, Procedure A.

H. Maximum length to be 2'-0".

2.3 LOW PRESSURE DUCTWORK

A. Furnish and install all ducts for the air conditioning, heating and ventilating systems. Ductwork shall be complete with grilles, vanes splitters, flashings, hangers, flexible connections, manual dampers, fresh air inlet louvers, reinforcing angles, transitions to equipment, etc.

B. All low pressure ductwork (mean velocity less than 2,000 FPM and static pressure in duct 2" of water or less) shall be constructed as per SMACNA Standards, 1995 Edition, Chapter 1, and shall be of the gauge metal and reinforced as per SMACNA Standards, 1995 Edition.

C. Flashing shall be of the same material as specified under the roofing and flashing section of these specifications, or of 16-ounce sheet copper and shall be furnished and installed around all outside openings used for ducts or fans where required. Roof flashing shall extend at least 8" above roof. Cooperate with roofing contractor when installing flashing.

D. All duct connections to equipment shall be made with fire and mildew resistant flexible connections of canvas or other acceptable materials. Connections shall have suitable metal collar frames at each end and shall not be less than 4" long with at least 1" of slack in the connection. Flexible connections shall be heat resistant to 500 degrees F continuously.

E. Duct dimensions shown are metal sizes. All edges shall be straight and true.

F. All flexible connections, duct liner and adhesives shall be U.L. listed as having a maximum flame spread of 50, fuel contribution of 25 and smoke contribution of 25.

G. This Contractor shall furnish and install in ductwork all dampers, vanes splitters, etc.. as shown on the drawings or necessary to make the system complete. Where dampers or splitters can not be accessed through lay in ceiling, Contractor shall provide lockable 24" x 24" access door. Contractor shall coordinate location with Architect.

H. Shafts shall be marked to show position of dampers, vanes, splitters, etc.

I. Ductwork shall be supported in accordance with SMACNA Plate No. 17 and No. 18, up to and including band iron hangers attached to duct by means of screws or rivets per hanger.

J. Access doors shall be provided in ductwork for all automatic dampers and each manual

damper 3 square feet in area or larger, and shall be so located that damper can be completely serviced through the access door. Access door shall be provided with felt gaskets and suitable hinges and locks. Where access doors occur in insulated duct, double skin insulated doors shall be used.

K. Where square ducts are shown, provide single vane elbows as per Plate 22, Figure A, SMACNA Standards, 1995 Edition. For all ductwork over 18" provide double vane square elbow as shown in Figure C of the Plate.

L. All low pressure ductwork joints shall be sealed with hard cast "iron grip".

M. Flexible air duct for connections between low pressure rectangular duct and ceiling diffusers shall be pre- insulated and listed by Underwriters Laboratories under U.L Standard 181 as a Class 1 flexible air duct and complying with NFPA Standards 90A and 90B.

N. All flex duct 45 degree and 90 degree turns shall be metal hard duct.

2.4 INSULATED ACOUSTICAL LOW PRESSURE FLEXIBLE DUCT

A. The duct shall be constructed of a CPE fabric supported by helical wound galvanized steel.

B. Provide where indicated on drawings Flexmaster Type 8M UL181 Class I Air Duct.

C. Fabric shall be mechanically locked to the steel helix without the use of adhesives or chemicals.

D. The internal working pressure rating shall be at least 6" w.g. positive and 4" w.g. negative with a bursting pressure of at least 2½ time the working pressure.

E. The duct shall be rated for a velocity of at least 4000 feet per minute.

F. The duct must be suitable for continuous operation at a temperature range of -20° F to +250°

G. Acoustical performance, when tested by an independent laboratory in accordance with the Air Diffusion Council's Flexible Air Duct Test Code FD 72-R1, Section 3.0, Sound Properties, shall be as follows:

The insertion loss (dB) of a 10 foot length of straight duct when tested in accordance with ASTM 477, at a velocity of 2500 feet per minute, shall be at least:

Octave Band	2	3	4	5	6	7
Hz.	125	250	500	1000	2000	4000
6" diameter	7	31	40	38	40	27
8" diameter	13	29	36	35	38	22

12" diameter	21	28	29	33	26	12

The radiated noise reduction (dB) of a 10 foot length of straight duct when tested in accordance with ASTM E477, at a velocity of 2500 feet per minute, shall be at least:

Octave Band	2	3	4	5	6	7
Hz.	125	250	500	1000	2000	4000
6" diameter	5	8	7	8	11	15
8" diameter	10	7	7	8	10	13
12" diameter	9	6	6	5	9	13

The self generated sound power levels (LW) dB re 10^{-12} Watt of a 10 foot length of straight duct for an empty sheet metal duct when tested in accordance with ASTM E477, at a velocity of 1000 feet per minute, shall not exceed:

Octave Band	2	3	4	5	6	7
Hz.	125	250	500	1000	2000	4000
6" diameter	42	31	23	18	17	21
8" diameter	41	34	27	19	18	21
12" diameter	54	45	38	31	27	23

Factory insulate the flexible duct with fiberglass insulation. The R value shall be at least 5.0 at a mean temperature of 75° F. (R-4.2 is not acceptable)

H. Cover the insulation with a fire retardant metalized vapor barrier jacket reinforced with crosshatched scrim having a permeance of not greater than 0.05 perms when tested in accordance with ASTM E96, Procedure A.

I. Maximum length to be 3'-0
ALL FLEX CONNECTIONS TO CEILING DIFFUSERS MUST BE FACTORY DESIGNED TO HAVE NO DIMENSIONAL CONTORTION WHEN CONNECTED TO THE DIFFUSER.

2.5 FIRE AND SMOKE DAMPERS

A. Round and oval fire dampers shall be designed for high pressure duct systems.

B. Rectangular fire dampers shall be designed for low pressure duct systems.

C. All fire dampers must be NFPA 90A and UL approved.

D. Furnish and install access doors in ductwork, walls, and ceilings where required to service all fire dampers, smoke dampers and detectors. All fire and smoke dampers shall be installed by the sheet metal contractor. All smoke detectors shall be furnished by the electrical Sub-contractor. Control of smoke dampers shall be coordinated with fire alarm system and building automation system.

E. Rectangular Smoke Dampers - Louvers Dampers Inc. Model SD-400-UD or Ruskin FSD-35 tight seal parallel blade smoke dampers with low leakage and felted blades.

F. Round and Oval Smoke Dampers - Shall be same as above but complete with welded round or oval collars. Units shall be capable of handling pressures up to 6" W.G.

G. Smoke dampers shall be Class I rated as per UL 555.

H. Sheet metal contractor shall provide and install all smoke dampers and actuators. Dampers shall be provided with end switches

I. Approved Manufacturers: Pottorff, Ruskin, Price, Nailor Industries, Greenheck, or prior approved equal.

2.6 SPIN TAPS

A. All round low pressure connections to rectangular ducts shall be made with a factory fabricated spin collar fitting with damper and constructed of minimum 26 ga galvanized steel. The damper shall have a 2" raised handle with a high quality locking quadrant. A 3/8" continuous rod with "U" bolts connects the damper to the rod. Nylon end bearings are required where the rod penetrates the spin collar barrel.

B. Provide Flexmaster #FLD-B03, Dace #26 ga MSDS – CO3, or prior approved equal.

2.7 LOW LOSS TAP

A. All round low pressure connections to rectangular ducts shall be made with a factory fabricated 45 degree low loss entry "shoe" tap with damper constructed of minimum 26 gage galvanized steel. The damper shall have a 2" raised handle with a high quality locking quadrant. A 3/8" continuous rod with "U" bolts connects the damper to the rod. Nylon end bearings are required where the rod penetrates the spin collar barrel.

B. Provide Flexmaster #STOD-BO3, Dace # 26 ga STOD-C03, or prior approved equal.

C. For medium pressure systems where used upstream of VAV terminals, the damper can be eliminated (use Flexmaster #STO or Dace 24 ga STO). Gauge shall be 24 gauge on medium pressure systems.

PART 3 - EXECUTION

3.1 INSTALLATION

A. See details of ductwork symbols and connections on drawing.

END OF SECTION 233100

SECTION 233410 - GENERAL EXHAUST SYSTEM

PART 1 - GENERAL

1.1 SCOPE

A. This Section includes general and exhaust fans with accessories.

1.2 RELATED DOCUMENTS

A. Drawings and general provisions of Contract, including General and Supplementary Conditions and Division 1 Specification Sections, apply to this Section.

B. Requirements of the following Division 23 Sections apply to this section:

1. "BASIC MECHANICAL REQUIREMENTS."
2. "BASIC MATERIALS AND METHODS."
3. "ELECTRICAL REQUIREMENTS FOR MECHANICAL EQUIPMENT."

C. Related Sections: The following sections contain requirements that relate to this section:

1. Division 23, Section 23 05 93 "TESTING, AND BALANCING" for air-handling systems testing, adjusting, and balancing requirements and procedures.
2. Division 23 Section 23 09 00 - CONTROLS

1.3 SUBMITTALS

A. Submit shop drawings and product data under provisions of Section 01 33 00.

B. Product data for selected models, including specialties, accessories, and the following:

1. Fan performance curves with system operating conditions indicated.
2. Fan sound power ratings.
3. Motor ratings and electrical characteristics plus motor and fan accessories.
4. Materials gages and finishes.
5. Dampers, including housings, linkages, and operators.

C. Shop drawings from manufacturer detailing equipment assemblies and indicating dimensions, weights, required clearances, components, and location and size of field connections.

D. Maintenance data for inclusion in Operating and Maintenance Manual.

1.4 QUALITY ASSURANCE

A. NEMA Compliance: Motors and electrical accessories shall comply with NEMA standards.

B. Electrical Component Standard: Components and installation shall comply with NFPA 70 "National Electrical Code."

PART 2 - PRODUCTS

2.1 MANUFACTURERS

A. Certain items in this Specification are listed by manufacturer and/or manufacturer's model number to establish general style, type, character, and quality or product desired. Similar items manufactured by other than those listed will be considered, providing submittals are made according to Pre-Bid approval requirements of Instruction to Bidders.

B. Where no manufacturer or model number are given, any product meeting performance or design criteria, or referenced trade association standard may be used and Pre-Bid Approval is not required.

2.2 MANUFACTURERS

A. Manufacturers: Subject to compliance with requirements, provide products by one of the following:

1. General Exhaust Fans:
   a. Greenheck GB Series
   b. Acme PL Series
   c. PENN/Barry
   d. Twin City
2. Fume Hood Exhaust Fans:
   a. Strobic Air Tri Stack Series
   b. MK Plastics AXIJET

2.3 SOURCE QUALITY CONTROL

A. Testing Requirements: The following factory tests are required:

1. Sound Power Level Ratings for General Exhaust Fans: Comply with AMCA Standard 301 "Method for Calculating Fan Sound Ratings From Laboratory Test Data." Test fans in accordance with AMCA Standard 300 "Test Code For Sound Rating." General exhaust fans shall be licensed to bear the AMCA Certified Sound Ratings Seal.
2. Fan Performance Ratings: Establish flow rate, pressure, power, air density, speed of rotation, and efficiency shall be factory tested and ratings in accordance with AMCA Standard 210/ASHRAE STANDARD.

2.4 DIRECT AND BELTED SPUN ALUMINUM POWER ROOF VENTILATORS

A. General Description:

1. Direct Drive: Roof exhaust fans shall be centrifugal direct drive type.

2. The fan wheel shall be centrifugal backward incline, constructed of aluminum and shall include a wheel cone carefully matched to the inlet cone for precise running tolerances. Wheels shall be statically and dynamically balanced.
3. The fan housing and schroud shall be constructed of heavy gauge aluminum with a ridged internal support structure. The fan shroud shall have a rolled bead for added strength.
4. Motors shall be out of the air stream on vibration isolators. Fresh air for motor cooling shall be drawn into the motor compartment from an area free of discharge contaminants. Motors shall be readily accessible for maintenance.
5. A disconnect switch shall be factory installed and wired from the fan motor to a junction box within the motor compartment. A conduit chase shall be provided through the curb cap to the motor compartment for ease of electrical wiring.

B. GENERAL DESCRIPTION: Belt Drive

1. Belt Drive Centrifugal Roof Exhausters shall have centrifugal forwardly inclined wheels, constructed of aluminum and shall include a wheel cone carefully matched to the inner cone for precise tower running. Wheels shall be statistically and dynamically balanced.
2. The fan housing shall be constructed of heavy gauge aluminum with a rigid internal support structure. The fan schroud shall have a rolled beam for added strength.
3. Motors shall be heavy duty ball bearing type carefully matched to the fan mode and furnished at the specified voltage, phase and enclosure. Motors and drive shall be mounted on vibration isolators, out of the air stream. Fresh air for motor shall be drawn in the motor compartment from an area free of discharge contaminants. Motors shall be accessibly for maintenance.
4. Drive frame assembly shall be constructed of heavy gauge steal and mounted on vibration isolators
5. Precision ground and polished fan shafts shall be mounted in permanently sealed, lubricated pillow block ball bearings. Bearings shall be selected for a minimum (L50) life in access of 200,000 hours at maximum catalog operating speed.
6. Drives shall be sized for a minimum of 150% of driven horsepower. Pulleys shall be of the fully matched cast iron type, keyed and securely attached to the wheel and motor shaft. Motor pulleys shall be adjustable for final system balance.
7. A disconnect switch shall be factory installed and wired from the fan motor to a junction box installed within the motor compartment. A fan conduit chase shall be provided through the curb cap to the motor compartment for ease of installation.
8. All fans shall bear AMCA Certified Ratings Seal for sound and air performance.
9. Each fan shall bear a permanently affixed manufacturer's name plate containing the model number and individual serial number for future identification.

END OF SECTION 233410

SECTION 233600 - AIR TERMINAL UNITS

PART 1 - GENERAL

1.1 SECTION INCLUDES

A. Variable volume terminal units.

B. Variable volume regulators.

C. Integral heating coils.

D. Integral damper motor operators.

1.2 PRODUCTS FURNISHED BUT NOT INSTALLED UNDER THIS SECTION

A. Section 230900 - Controls system - Building Automatic Temperature Controls

1.3 RELATED SECTIONS

A. Section 233100 - Ductwork

1.4 REFERENCES

A. NFPA 90A - Installation of Air Conditioning and Ventilation Systems.

B. UL 181 - Factory-Made Air Ducts and Connectors.

C. ARI 880 - Air-Conditioning and Refrigeration Institute Standard Rating Conditions for Air Terminals

D. UL - Shutoff terminal must be UL listed as a Room Air Terminal.

E. ASTM A653/A653M, A924/A924M Steel Sheet, Zinc Coated Galvanized.

F. NFPA 90A, Lining

1.5 SUBMITTALS

A. Submit shop drawings and product data sheets indicating configuration, general assembly, and materials used in fabrication.

B. Submit product data indicating configuration, general assembly, and materials used in fabrication. Include catalog performance ratings which indicate air flow, static pressure, and radiated sound power levels (2nd through 7th octave bands) at design maximum

operating conditions. Also submit Radiated Sound NC values shall be calculated at design conditions with the following path attenuation credits:

Correction to Octave Band Sound Power Value

	2	3	4	5	6	7
ENV. ADJ.	-3	-2	-1	-1	-1	-1
Mineral Fiber Ceiling Tile	-9	-10	-12	-14	-15	-15
Space Effect Factor	-10	-11	-12	-13	-13	-14

This transfer function represents modeling assumptions based on ARI 885-90.

C. Submit manufacturer's installation instructions.

1.6 OPERATION AND MAINTENANCE DATA

A. Submit operation and maintenance data.

B. Include manufacturer's descriptive literature, operating instructions, maintenance, and repair data.

C. Include directions for resetting all pneumatic controls.

1.7 QUALIFICATIONS

A. Manufacturer: Company specializing in manufacturing the products specified in this section.

1.8 SYSTEM RESPONSIBILITY

A. The contractor shall be responsible for any and all costs associated with any and all changes resulting from the use of a supplier other than the one used as "basis of design".

1.9 WARRANTY

A. Provide one year manufacturer's parts warranty.

PART 2 - PRODUCTS

2.1 MANUFACTURERS

A. General

1. Manufacturers must participate in the ARI Certification program. Unit performance

data must be Rated in Accordance with ARI Standard 880, and must display the ARI Symbol on all standard units.

2. Shutoff terminals must be UL listed as a Room Air Terminal.

B. Specified Manufacturers

1. TRANE
2. TITUS
3. Enviro-TEC
4. Nailor Industries
5. Krueger
6. Price

2.2 MANUFACTURED UNITS

A. Air volume supply air control terminals for connection to single medium pressure duct.

B. Identify each terminal unit with clearly marked identification label and airflow indicator. Label shall include unit nominal air flow, maximum factory set air flow, minimum factory set air flow, and coil type.

C. VAV box manufacturer shall provide enclosure, transformer and factory mounting and wiring of VAV box controls provided by temperature controls contractor.

2.3 FABRICATION

A. Casings. Units shall be completely factory assembled, manufactured of corrosion protected welded screwed steel, and fabricated with a minimum of 18-gauge metal on the high pressure (inlet) side of the VAV damper and 22-gauge metal on the low pressure (outlet) side and unit casing.

B. INSULATION - Matt - Interior surface of unit casing acoustically and thermally lined with a minimum of 1-1/2 inch, R-Value 2.1 1.9 lb./cu. ft. density glass fiber with high density facing. Insulation shall be UL listed and meet NFPA-90A and UL 181 requirements. The cut edges on the discharge of the unit shall be covered by a metal flange.

C. Assembly: Air volume damper, and controls shall be in a single cabinet.

2.4 VOLUME DAMPER

A. Locate air volume damper assembly inside unit casing. Construct from extruded aluminum or a minimum of 20 gauge (0.9 mm) galvanized steel components. Key damper blades into shaft with nylon fitted pivot points. Flow sensor must be provided regardless of control chosen. Flow sensor must be a ring or cross. Bar or single point sensing device is not acceptable.

B. Air volume control damper shall be factory calibrated assembly consisting of air valve with integral actuator.

C. Pneumatic normally open actuator shall position damper.

2.5 TESTS

A. Factory set and check all controllers to within 5% of scheduled maximum and minimum settings. Base performance on tests conducted in accordance with ARI 880.

B. Maximum Casing Leakage: 1 percent of nominal air flow at 0.5 in wg inlet static pressure.

C. Maximum Damper Leakage: 1 percent of design air flow at 4 in wg inlet static pressure.

PART 3 - EXECUTION

3.1 INSTALLATION

A. Install in accordance with manufacturer's instructions.

3.2 ADJUSTING

A. Reset volume with damper operator attached to assembly allowing flow range modulation from 100 percent of design air flow to 25 percent nominal air flow. Set units with heating coils for minimum 30 percent full flow.

END OF SECTION 233600

SECTION 233700 - AIR OUTLETS AND INLETS

PART 1 - GENERAL

1.1 WORK INCLUDED

A. Diffuser boots.

B. Registers/grilles.

C. Louvers.

1.2 RELATED WORK

A. See Mechanical Plans for wall louvers.

1.3 REFERENCES

A. ADC 1062 - Certification, Rating and Test Manual.

B. AMCA 500 - Test Method for Louvers, Dampers, and Shutters.

C. ANSI/NFPA 90A - Installation of Air Conditioning and Ventilating Systems.

D. ARI 650 - Air Outlets and Inlets.

E. ASHRAE 70 - Method of Testing for Rating the Air Flow Performance of Outlets and Inlets.

F. SMACNA - Low Pressure Duct Construction Standard.

1.4 QUALITY ASSURANCE

A. Test and rate performance of air outlets and inlets in accordance with ADC Equipment Test Code 1062 and ASHRAE 70.

B. Test and rate performance of louvers in accordance with AMCA 500.

1.5 REGULATORY REQUIREMENTS

A. Conform to ANSI/NFPA 90A.

1.6 SUBMITTALS

A. Submit shop drawings and product data under provisions of Section 013000 –

Administrative Requirements.

B. Provide product data for items required for this project.

C. Submit schedule of outlets and inlets indicating type, size, application, and noise level.

D. Review requirements of outlets and inlets as to size, finish, and type of mounting prior to submitting product data and schedules of outlets and inlets.

E. Submit diffuser, grille and register color data to Architect for approval.

PART 2 - PRODUCTS

2.1 GENERAL

A. See mechanical schedules and drawings for diffuser types, sizes and configuration. See architectural plans - room finish schedules for type of ceiling and wall construction.

B. Substitutions: Under provisions of Instructions To Bidders, Page IB-3, Paragraph 4.3.

2.2 ACCEPTABLE MANUFACTURERS - Ceiling Diffusers

A. Titus TMSA Series, Krueger Series 1400 Adjustable

B. All diffusers shall have opposed blade volume dampers and adjustable horizontal to vertical four way throw operable from face of grille. All diffusers must be aluminum.

2.3 ACCEPTABLE MANUFACTURERS - Ceiling Exhaust Grilles

A. Titus - Model 50F Code C 1/2" x 1/2" x 1" Cube Core, Krueger EGC-10, Nailor Industries Model 51EC

B. All exhaust registers shall have opposed blade dampers.

C. Grilles shall have baked enamel white finish.

D. All dampers shall be operable from grille face.

2.4 ACCEPTABLE MANUFACTURERS - Ceiling Return Air Grilles

A. Titus - 50F Code C, Krueger EGC-10, Nailor Industries

B. All return air shall have opposed blade dampers. See plans for filter backed grille requirements.

2.5 ACCEPTABLE MANUFACTURERS - Wall Supply Registers.

A. Titus 1700 Series, Krueger ULTRA-FLO

B. All registers shall have adjustable blade dampers on all registers.

C. Furnish and install opposed blade damper on all registers.

D. Finish to be approved by Architect.

2.6 ACCEPTABLE MANUFACTURERS - DOOR RETURN GRILLES

A. Titus Model CT-700, Krueger Series 5600, Nailor Industries

B. Substitutions: Under provisions of Instructions To Bidders, Page IB-3, Paragraph 4.3.

C. All aluminum construction & design.

D. Finish to be approved by Architect.

PART 3 - EXECUTION

3.1 INSTALLATION

A. Install items in accordance with manufacturer's instructions.

B. Check location of outlets and inlets and make necessary adjustments in position to conform with architectural features, symmetry, and lighting arrangement. Refer to Section 099000.

C. Install diffusers to ductwork with air tight connection.

D. Provide balancing dampers on duct take-off to diffusers, and grilles and register, regardless of whether dampers are specified as part of the diffuser, or grille and register assembly.

E. Furnish and install necessary frames, bucks, sponge rubber gasketed, etc. to make a neat setting job.

F. Diffusers shall be placed to insure that air does not blast against columns and lights.

G. All diffusers, registers, etc. shall have external volume controls and deflecting grids.

H. Ceilings in areas where plaster or gypsum board ceiling are used, shall be surface mounted.

END OF SECTION 233700

SECTION 235216 - CONDENSING OUTDOOR HOT WATER GAS FIRED BOILER

PART 1 - PRODUCTS

1.1 MANUFACTURERS

A. Furnish outdoor firetube design, pulse or forced draft fired, natural gas condensing design hot water boiler(s) with design pressure as scheduled on the drawings and return water temperatures as low as 60 degrees F. Low water volume copper fin style condensing boilers or boilers with external secondary heat exchanger designs are not acceptable for this project.

B. Alternate manufacturers complying with plans and specifications must provide complete submittal data in addition to equipment brochures for review and approval by the consulting engineer 10 days prior to bid date. Failure of manufacturers to provide complete data required for proper evaluation will be rejected without recourse. Manufacturers who do not meet all of the specification requirements including full modulation firing rate control will not be approved for this project.

C. Fulton, Areco, or Cleaver Brooks

1.2 GENERAL DESCRIPTION

A. Each unit shall be pulse combustion type complete with boiler fittings and automatic controls. The boiler, with all piping and wiring, shall be completely factory assembled as a self-contained unit. Each boiler shall be neatly finished, thoroughly tested and properly packaged for shipping. Boiler design and construction shall be in accordance with Section IV of the ASME Code for hot water heating boilers with a maximum working pressure of 160 PSI. The boiler shall be CSA (formerly AGA/CGA) approved as a direct vent boiler and comply with ASME CSD-1 Code requirements.

1.3 BOILER SIZE AND RATINGS

A. The capacity of each unit shall be as scheduled on the drawings with 120 degree F. entering water temperature or as indicated on the drawing schedule. Output will increase should the return water temperature be reduced below the 120 degrees noted above. Output and therefore thermal fuel to water efficiency shall increase as the return water temperature decreases.

1.4 BOILER DESIGN

A. Boiler shall be firetube design only, utilizing the principles of pulse or forced draft combustion. The boiler, due to the nature of pulse combustion, shall be self-aspirating, thus requiring no forced or induced draft fan to supply air for combustion after ignition. The exhaust decoupler shall be constructed of corrosion resistant corten and shall include a flue gas condensate drain. The exhaust pipes shall be constructed of stainless

steel. The boiler pressure vessel shall be completely insulated with a minimum of 2" of insulation and shall be encased in an 18 gauge metal cabinet with primer and finish coat of paint. Watertube copper fin and stainless steel style designs are not acceptable for this project and will not be approved if submitted after bids are received.

B. The pressure vessel shall be fully insulated with 2" of high temperature insulation.

C. The pulse combustor location shall be such that all combustor assembly components are located within water-backed areas.

D. External convection and radiation heat losses to the boiler room from the boiler shall be less than 0.5% of the rated input and the boiler shall not contain any refractory or refractory lined furnace or firebox.

E. The boiler shall be designed for operation in the condensing mode, in order to extract latent heat from the water in combustion products, with a minimum overall fuel-to-water efficiency of 98 % at a return water temperature of 80 °F. This efficiency shall be obtained at full rated input capacity of the boiler.

F. The boiler shall be capable of operation in either a non-condensing or condensing capability and shall not require the use of a 3-way valve or duplex boiler mounted secondary pumping and piping arrangements when operating in either the full condensing or non condensing mode of operation. No minimum boiler return water temperature or minimum flow rate shall be a requirement of the equipments operation or physical installation.

G. The boiler shall include control capabilities to reset the water set point based on outside air temperature. This capability shall be provided by either a signal from the BAS or a boiler furnished remotely mounted and field wired automatic reset panel, which shall maximize fuel to water efficiency.

1.5 BOILER FLUE VENTING

A. The Fulton Pulse Combustion Boiler shall be CSA approved as a direct vent boiler. Conventional chimney or stack shall not be required. Direct venting shall be accomplished with a stainless steel, double wall, Heat Fab or equal vent piping products installed in accordance with applicable national, state and/or local codes. The boiler shall have the combustion air intake supply ducted with PVC pipe from outside air source.

1.6 BOILER FITTINGS

A. Safety valve(s) shall be ASME Section IV approved side outlet type. Their size and number shall be in accordance with code requirements and set to open at 125 psig.

B. Temperature and pressure gauge shall be mounted on top of the boiler.

C. Provide each boiler with condensate drainers for field mounting and piping by the installing contractor. Provide union connections for ease of future service in this piping

arrangement.

D. Provide each condensate PH filters, One (1) per five boiler arrangement designed to elevate the condensate PH to 7.00 prior to its introduction into the existing floor drainage system in this mechanical room. Contractor shall mount and pipe each system per the manufacturers written recommendations. PH systems must be factory furnished and installed per their written guidelines for acceptance.

1.7 CONTROL SPECIFICATIONS

A. The flame safeguard system shall be Fulton or Honeywell with Honeywell display module for operator trouble shooting assistance. The control shall provide a 35-second prepurge and postpurge. The control shall maintain a running history of operating hours, number of cycles, and the most recent six faults. The individual control shall be furnished with a keyboard display module that will retrieve this information.

B. Boiler/burner packaged unit's electrical supply power shall be 120/1/60 with a maximum supply amp draw of 14. Any other equipment supplied by the contractor may require electrical design changes and these are at the contractors full expense for redesign and installation purposes.

C. Boiler shall be provided with a network controller that is BACnet compatible. Pulse combustion controls shall include the following:

1. Operating temperature controller for automatic start and stop of the pulse combustor.
2. High limit temperature controller with manual reset.
3. One low water cutoff probe in the boiler shell with manual reset and push-to-test capability.
4. Air safety switch to prevent operation until sufficient prepurge air is assured.
5. High condensate cut-off switch located in the exhaust decoupler.
6. Proof of flame switch to prove combustion based on pressure.
7. Gas pressure regulator shall be furnished factory installed (Note: upstream pressure to be within the range 7" – 10" W.C. If upstream pressure exceeds 11" W.C. an additional regulator is required).
8. Full modulation combustion control system with minimum 5:1 turndown shall be furnished, which shall provide a turndown rate over the full input range from low to high fire. The supply temperature and setpoint temperature shall be displayed at all times by LED readout. Output shall be a continuous PID via 4-20 mA current.
9. The boiler manufacturer shall supply indoor design with NEMA 3R electrical panel with all outdoor gas train and electrical components.

D. Locate boiler controller in mechanical room in building.

1.8 OPERATING MANUAL

A. Instructions for installation, operation and maintenance of the boiler shall be contained in a manual provided with each boiler unit. Provide four (4) manuals with the submittal process for use by the installing contractor during the installation process.

B. A wiring diagram corresponding to the boiler shall be affixed to the boiler near the electrical panel.

1.9 EXTENDED WARRANTIES

A. The pressure vessel shall be guaranteed against thermal shock for 10 years when utilized in a closed loop hydronic heating system with a temperature differential of 170 °F or less. The boiler pressure vessel shall be guaranteed accordingly without a minimum flow rate or return water temperature requirement. The boiler shall not require the use of primary secondary pumping, flow switches or other devices to ensure minimum flow.

B. The pressure vessel, combustor, exhaust pipes (heat exchanger) and exhaust decoupler (condensate collection) shall be guaranteed against flue gas corrosion and materials/workmanship for a period of 5 years from date of initial start up by the boiler manufacturer.

C. All parts not covered by the above warranties shall carry a five (5) year parts and labor replacement warranty from date of initial start up. This shall include all burner and boiler safety and operating electrical components and the labor required to remove and replace the failed component for a period of five years. Electrical power surges or any other external electrical power source problem are excluded from this warranty.

D. The boiler representative shall provide all required initial boiler start up, training, 24 hour-service and warranties. This shall include initial programming of the control system panels, burner adjustments to achieve maximum firing rate efficiency, and operator training for all shift personnel.

E. No additional monies will be paid for these services after compete installation is accomplished by the installing mechanical contractor.

END OF SECTION 235216

SECTION 237413 - AIR HANDLING UNIT WITH COILS

PART 1 - GENERAL

1.1 WORK INCLUDED

A. Packaged Air Handler Units.

1.2 RELATED WORK

A. Section 230516 - Expansion Compensation.

B. Section 230700 - Piping Insulation.

1.3 REFERENCES

A. ARI 430 - Standard for Central Station Air Handling Units.

B. NFPA 90A - Installation of Air Conditioning and Ventilation Systems.

C. ANSI/AFMBA 9 - Load Ratings and Fatigue Life for Ball Bearings.

D. SMACNA - HVAC Duct Construction Standards.

E. ARI 410 - Standard for Forced Circulation Air-Cooling and Air-Heating Coils.

F. ANSI/UL 900 - Test Performance of Air Filter Units.

G. AMCA 300 - Reverberant Method for Sound Testing of Fans.

H. AMCA 301 - Method for Publishing Sound Ratings for Air Moving Devices.

I. ASHRAE 68 - Laboratory Method of Testing In-Duct Sound Power Measurement Procedure for Fans.

1.4 QUALITY ASSURANCE

A. Air Handling Units: Product of manufacturer regularly engaged in production of components who issues complete catalog data on total product offering.

B. Variable Air Volume Air Handling Units with Variable Frequency Drives: Certify air volume, static pressure, fan speed, brake horsepower and selection procedures in accordance with ARI 430. Certify balance of fans between all points 10-100% of capacity. Any costs to adjust fans to meet scheduled capacities shall be the sole responsibility of the contractor.

C. Air Coils: Certify capacities, pressure drops and selection procedures in accordance with

ARI 410-87.

1.5 SUBMITTALS

A. Submit unit performance including: capacity, nominal and operating performance.

B. Submit Mechanical Specifications for unit and accessories describing construction, components and options.

C. Submit shop drawings indicating overall dimensions as well as installation, operation and service clearances. Indicate lifting points and recommendations and center of gravity. Indicate unit shipping, installation and operating weights including dimensions.

D. Submit data on electrical requirements and connection points. Include recommended wire and fuse sizes or MCA, sequence of operation, safety and start-up instructions.

1.6 DELIVERY, STORAGE, AND HANDLING

A. Deliver products to site fully assembled up to practical shipping and rigging limitations. Units not shipped fully assembled shall have tags and airflow arrows on each section to indicate location and orientation in direction of airflow. Each section shall have lifting lugs or shipping skid to allow for field rigging and final placement of section.

B. Deliver units to site with fan motors, sheaves, and belts completely assembled and mounted in units. Mount motors as specified in Article 2.04 Paragraph F and Article 2.05 Paragraph A.

C. Store and protect products.

D. Store in clean dry place and protect from weather and construction traffic. Handle carefully to avoid damage to components, enclosures, and finish.

1.7 ENVIRONMENTAL REQUIREMENTS

A. Do not operate units for any purpose, temporary or permanent, until ductwork is clean, filters are in place, bearings lubricated, and fan has been test run under observation.

1.8 EXTRA STOCK

A. Provide one (1) extra set of 30% efficient pleated disposable filters.

1.9 APPROVAL OF PRODUCT PRIOR TO BIDDING

A. Refer to section 016000, Material and Equipment, para.1.4, 1.4A & 1.4B for prior approval requirements.

PART 2 - PRODUCTS

2.1 ACCEPTABLE MANUFACTURERS

A. Trane Company Model Modular Climate Changer

B. York International Model Airpak

C. Daikin

D. Carrier

2.2 GENERAL

A. Manufacturer must clearly define any exceptions made to Plans and Specifications. Mechanical Contractor is responsible for expenses that occur due to exceptions made.

B. Fabricate draw-thru type air handling units with horizontal or vertical coil and fan sections with horizontal discharge and filter mixing box with angle filter section.

C. Factory fabricate air handling units of sizes, capacities, and configurations as scheduled on drawings.

D. Provide factory installed 5"(minimum) base rail made of 12 gauge (minimum) galvanized steel for shipping and mounting purposes. Unit mounting legs are not acceptable, a continuous base rail must be provided. Contractor will be responsible for providing a housekeeping pad when unit mounting device is not of sufficient height to properly trap unit. Unit mounting devices not constructed of galvanized steel shall be chemically cleaned, coated with rust inhibiting primer, and finished with rust inhibiting enamel.

2.3 CASING

A. Unit shall be constructed of a complete structural frame with removable panels. Removal of side panels shall not affect the structural integrity of the unit. Contractor shall be responsible to provide connection flanges and all other framework that is needed on unit to ensure that removal of unit's panels shall not affect structural integrity.

B. Panels shall be fully removable to allow for a proper way to thoroughly clean panels of microbial growth and to access internal parts. If panels are not removable, then manufacturer shall provide access sections with doors between all internal components to ensure access and cleanability of the air handler.

C. Construct casing sections located upstream of supply fan for operation at 4 inches water gage negative static pressure and casing sections located downstream of supply fan for operation at 6 inches water gage positive static pressure.

D. All segments shall be double wall a minimum of 2" thick. The exterior casing shall be

minimum 18 ga G90 galvanized sheet steel. The interior lining shall be minimum 20 ga G90 solid galvanized sheet metal. All panels shall be insulated with 2"-1.5# fiberglass insulation. Insulation must be a full 2" (uncompressed) throughout the entire unit. Units with less than 2" of insulation in any part of the walls, floor, roof or drain pan shall not be acceptable. Any portion of the unit, including the frame rails, that is not insulated (gaps) or has less than 2" uncompressed insulation shall be the responsibility of the manufacturer to modify. Insulation shall comply with NFPA 90A.

1. Seal joints between exterior panels and structural frames with closed-cell neoprene foam gasketing a minimum of 1/4" thick and 3/4" wide for air seal and thermal and acoustical break.

E. Double wall access doors shall be provided in the fan and filter segments on the coil header side of the unit. Access doors must also be provided in all segments where removal of sheet metal screws is required for unit access. Doors shall be of the same thickness and construction as the wall panels. Casing shall have removable full size access panels or doors as scheduled on drawings. Doors shall have the same construction as all other unit panels. Access doors shall have double wall style neoprene gasketing around the full perimeter of access doors/panels to prevent air leakage. Provide "ventlock" style non-corrosive alloy latches. If access doors open against unit operating pressure, provide safety latches that allow access doors to partially open after first handle movement and fully open after second handle movement.

2.4 DRAIN PAN CONSTRUCTION

A. Provide sealed double wall drain pans constructed to meet ASHRAE Std 62 for IAQ with a stainless steel (Type 304) liner. Drain pans shall be insulated with a minimum of 2" 1.5 lb density uncompressed insulation encased between the interior and exterior casing. The drain pan shall be a minimum of 4" deep to provide positive head pressure and the liner shall be pitched in 2 directions to a single drain. Units with cooling coils shall have drain pans under complete cooling coil section with additional distance to ensure no moisture carry over to the fan. If no moisture carryover space is provided in the coil section, an auxiliary drain pan with the same type construction shall be installed in the next downstream segment.

2.5 FANS

A. Provide supply fan sections with FC or AF, double width, double inlet centrifugal fan designed and suitable for class of service indicated on the unit schedule. Fan shaft shall be properly sized and protectively coated with lubricating oil. Fan shafts shall be solid and properly designed so that fan shaft does not pass through its 1st critical speed as unit comes to rated RPM. Fans shall be statically and dynamically balanced and tested as an assembly at the required RPM to meet design specifications. Key fan wheels to fan shaft to prevent slipping.

1. Provide self-aligning, grease lubricated pillow-block ball bearings selected for L-50 (200,000 hour average life) per ANSI/AFBMA 9. Extend both grease lubrication lines fittings to the drive side with plastic tubing and terminate with zerk fittings.

B. Internally mount fan and motor on the same isolation base with 1" spring isolators. Install flexible canvas ducts between fan and casings to ensure complete isolation. Flexible canvas ducts shall comply with NFPA 90A.

C. Fan sections shall have full height, double wall, hinged, removable access doors on drive side for inspection and maintenance of internal components. Construct doors in accordance with Article 2.03 paragraph E.

D. Weigh fan and motor assembly at manufacturer's factory for isolator selection. Statically and dynamically balance fan section assemblies. Fan section assemblies include fan wheels, shafts, bearings, drives, belts, isolation bases and isolators. Allow isolators to free float when performing fan balance.

E. Fans with Variable frequency drives shall be balanced for invertor duty operation after installation in the air handler. The fan will be balanced over the entire range of fan operation (30% to 100% RPM). The filter-in measurements shall not exceed 5 mils in the horizontal, vertical and axial planes. Filter-out measurements shall not exceed 7.5 mils in the horizontal, vertical and axial planes.

2.6 MOTORS AND DRIVES

A. Factory install all motors on slide base to permit adjustment of belt tension.

B. Fan motors shall be heavy duty, high efficiency, open drip proof design operable at 460 volts, 60 Hz, 3 phase.

C. V-belt drives shall be variable pitch for motors less than 20 hp and fixed for hp greater than 20. Drives shall be rated at 1.5 times the motor nameplates.

2.7 COILS

A. Coils shall be manufactured by the same company as the supplier of the air handling unit. Install coils such that headers and return bends are enclosed by the unit casing. Coils shall be rated IAW ARI Std 410.

B. Construct coils of 5/8" O.D. seamless copper tube with a minimum wall thickness of 0.020". Fins shall have collars drawn, belled and firmly bonded to the tubes by mechanically expanding the tubes. Fins shall be a aluminum and a minimum of 0.006" thick. Do not use soldering or tinning in bonding process.

C. Construct coil casing of G90 galvanized steel aluminum 18 ga with formed end supports and top and bottom channels. Intermediate casing supports shall be supplied for finned lengths exceeding 60". Cooling coils in excess of 48" finned height shall be supplied with an intermediate drain pan with drop tubes to guide condensate to the main drain pan.

D. Water cooling coils shall meet the following requirements:

1. Clearly label supply and return headers on outside of units such that direction of coil water flow is counter to direction of the unit air flow.

2. Coils shall be designed to operate at 250 psig working pressure and up to 300F and shall be tested to 325 psig compressed air under water.
3. Circuiting shall provide free and complete draining and venting when installed in the unit. All vent and drain connections shall be extended to the outside of the unit casing.
4. Coil grommets shall be provided on all coil and header penetrations through the unit casing.
5. Coil density shall not be greater than 10 fins per inch.

2.8 FILTERS AND DAMPERS

A. Factory fabricate a combination filter and mixing box in one standard segment. Filter media shall be arranged in an angle configuration and shall provide 2" -30% efficient pleated filters. The segment shall have a hinged access door on the drive side of the unit. The dampers shall be located as indicated on the drawings and shall be low leak opposed blade type. Dampers shall have 16 ga. galvanized steel blades. The blades shall be provided with a PVC coated polyester fabric mechanically locked into the blade edge. The jamb to be a flexible metal compression type. Leakage will not exceed 7.20 CFM/ft.sq. @ 1" w.g. and 14.00 cfm/ft.sq. @ 4" w.g.

2.9 AIR HANDLING UNIT SCHEDULE: See plans

END OF SECTION 237413

SECTION 260100 - BASIC ELECTRICAL REQUIREMENTS

PART 1 - GENERAL

1.1 SCOPE

A. The scope of work is as indicated on electrical drawings and includes but is not limited to the following:

B. Site:

1. Provide a 13.8KV – 480V pad mounted mineral oil transformer.
2. Provide MV feeders and connect to existing Southern University Distribution system. Feeders shall be concrete encased in duct bank.
3. Provide a natural gas emergency generator, automatic transfer switch, and associated emergency power feeders.
4. Provide an integrated manual transfer switch with docking station for temporary generator and load bank connections.
5. Provide temporary construction power; coordinate with the local Utility Company.
6. Provide in-ground pull boxes and conduit as requires to serve any/all electrical equipment located throughout the site.
7. Provide power and fire alarm connection to backflow preventer.
8. Provide site lighting poles and associated branch circuits.
9. Provide raceways with pull strings to future artwork locations on site.
10. Provide in ground box in landscape bed as described on plan

D. Power:

1. Provide panel, safety disconnect switches and associated feeder(s).
2. Provide receptacles, special outlets, junction boxes, and their associated branch circuits.
3. Provide branch circuits associated with all mechanical and plumbing system equipment, including all accessories such as motorized dampers, valves, fan interlocks, ionization, etc.

E. Lighting:

1. Provide interior light fixtures, wall switches, wall dimmers, and occupancy sensors and associated branch circuits.
2. Install all lighting fixtures furnished by others and associated branch circuits.
3. Provide all exterior building mounted fixture and associated branch circuits.
4. Provide exit light fixtures and both interior and exterior emergency light fixtures.
5. No lighting control systems utilizing batteries shall be permitted.
6. Lighting control shall adhere to IECC 2021.

F. Telecommunications:

1. Provide junction boxes and conduit for phone and data outlets. Provide (2) CAT 6 cables to each data outlet shown unless otherwise indicated.
2. Provide 3/4" plywood backboard. Paint with two coats of fire retardant paint on both sides.
3. Provide two (2) CAT 6 cables to the fire alarm control panel
4. Contractor shall provide data racks as indicated on plan, patch panels, wire management, ladder racks, and grounding system. Owner shall provide switches, UPS, etc.
5. Provide HDMI cabling between projectors and teacher workstations/presentation stations where indicated on plan.
6. Provide CAT 6A cables to wireless access points shown on plan.
7. Provide single mode fiber connection to campus system. Refer to telecom riser diagram and site plan for more information. Connections shall be completed by contactor and coordinated with Southern University IT department.

G. Fire Alarm:

1. Provide fire alarm control panel, voice evacuation panel and remote booster panels.
2. Provide manual pull stations where indicated on plan.
3. Provide visual and audio notification throughout including voice evacuation.
4. Provide smoke detectors at all control panels, voice evacuation panels and booster panels.
5. Provide duct mounted smoke detectors for all air units with greater than 2000 cfm air flow.
6. Provide a monitor module for all sprinkler system tamper and flow switches.
7. Provide a monitor module for sprinkler system hotbox heater power and tamper switches.

1.2 GENERAL CONDITIONS

A. The General Conditions and Supplementary General Conditions are a part of this section of these Specifications. The Contractor is cautioned to read and be thoroughly familiar with all provisions of the General Conditions. These conditions shall be complied with in every aspect.

1.3 DEFINITONS:

A. The word "shall" where used, is to be understood, as mandatory and the word "should" as advisory. "May" is used in the permissive sense.

B. Concealed: Concealed areas are those areas that cannot be seen by building occupants.

C. Exposed: Exposed areas are all areas that are exposed to view by building occupants, including areas below counter tops, inside cabinets and closets, inside all equipment rooms, and areas outside the building exterior envelope.

D. Feeder: Feeder consists of both conduit and wiring installed above or below grade

E. Provide: Provide shall including furnishing, installing, and connecting the item or items referenced unless specifically indicated otherwise.

1.4 QUALITY ASSURANCE

A. General:

1. Every effort has been made by the Engineer to clearly indicate all devices/equipment requiring an electrical/data connection. It is the intent of the Engineer that all light fixtures be powered and controlled, that all devices and equipment be circuited to a panelboard of appropriate voltage and breaker of MOCP not exceeding manufacturer's specifications. That all communications, security, and fire alarm devices are installed, wiring, and functioning properly.
2. Where there is a conflict between the contract document and an applicable Code. The Code shall govern except where the requirements of the contract documents are more stringent. The most stringent requirement shall apply.
3. All work shall be concealed unless specifically noted to be exposed.
4. Coordinate the exact locations of electrical outlets and equipment with building features and equipment as indicated on architectural, structural, mechanical, plumbing, landscape, and food service drawings. Review any/all proposed changes in electrical device/equipment locations with Architect prior to rough-in. Architect may direct relocation of outlets before installation, up to five (5) feet from the position indicated, without additional cost. Remove and relocate outlets placed in unsuitable locations when requested by the Architect, at no additional cost.
5. Resolve, in writing, any code violation discovered in contract documents with the Engineer prior to bidding. After award of the contract, Contactor shall make any correction or addition necessary for compliance with applicable codes at no additional cost.

B. An approved contractor for the work under this division shall be:

1. A licensed electrical contractor in the jurisdiction in which the work shall be performed.
2. Able to furnish evidence of having contracted for and installed not less than three (3) systems of comparable size and type that have served their Owners satisfactorily for no less than three (3) years.

C. All work, materials and equipment shall comply with the latest applicable codes, local ordinances, and UL requirements.

D. Provide new products of manufacturers regularly engaged in production of such equipment. Provide the manufacturer's latest standard design for the type product specified. All new products shall be listed for the use shown on drawings.

E. Equipment shall be delivered with a factory-applied finish so that no additional field painting is required.

F. Equipment shall be selected to conform the building space limitations. Do not provide equipment that cannot meet the arrangement requirements shown on plans. Contractor shall submit room layouts with submitted items shown drawn to scale.

Submittals will be rejected without floor plan Drawings showing submitted items.

G. All equipment included in the service and distribution specifications shall be provided by the same manufacturer.

H. Manufacturer names and model numbers are subject to change. Contractor shall verify them with manufacturer's representative prior to ordering any product or equipment.

1.5 GENERAL REQUIREMENTS

A. The Contractor is referred to all of the Drawings for building construction as well as the electrical Drawings.

B. The Contractor shall examine the site and shall verify to his own satisfaction the location of all utilities, and shall adequately inform himself as to their relation to his work before entering into a Contract and he shall base his bid on any conditions, which may be encountered during the progress of the work.

C. The Contractor shall furnish and install properly all materials, devices, equipment, supports, controls, appurtenances, etc., mentioned or required to make complete or satisfactory installations in working order whether shown or not. All electrical equipment shall be connected in accordance with manufacturer's instructions. All work shall be executed in a workmanlike manner and shall present a neat and mechanical appearance when completed.

D. The Contractor shall provide finished to match approved samples; all exposed finishes shall be approved by the Architect. Submit color samples as required.

1.6 APPLICABLE GENERAL CODES AND REGULATIONS

A. All electrical work and equipment, in whole or in part, shall conform to the applicable portions of the following specifications, codes and regulations in effect on that date of invitation for bids, and shall form a part of this specification.

B. The latest published edition of a reference shall be applicable to this Project unless identified by a specific edition.

C. All reference amendments adopted prior to the effective date of this Contract shall be applicable to this Project.

1. NFPA 70, National Electrical Code
2. National Fire Codes:

    a. NFPA 70E, Electrical Safety Requirements for Employee Workplaces
    b. NFPA 72, National Fire Alarm Code
    c. NFPA 77, Static Electricity
    d. NFPA 101, Life Safety Code
    e. NFPA 110, Emergency and Standby Power Systems

3. Occupational Safety and Health Regulations (OSHA).
4. NFPA Standards in effect shall be as listed or adopted by the appropriate authority having jurisdiction.
5. American National Standards Institute (ANSI)
6. Institute of Electrical and Electronics Engineers (IEEE)
7. Local, City and State Codes and Ordinances
8. Regulations and standards of the Electric Utility Company
9. National Electrical Safety Code (NESC)
10. National Electrical Manufacturers Association (NEMA)
11. Insulated Power Cable Engineers Association (IPCEA)
12. International Building Codes (IBC)
13. International Energy Conservation Codes (IECC)

D. Equipment that has been inspected and approved by the Underwriter's Laboratory shall bear its label or appear on its list of approved apparatus.

1.7 DRAWINGS

A. Plans and detail sketches are submitted to limit, explain, and define conditions, specified requirements, conduit sizes, and manner of erecting work. The Contractor is cautioned to field check and verify all existing conditions before bidding, as no extra compensation will be allowed for conditions found different than represented in the construction drawings and/or specifications. Written approval of the Architect shall be obtained prior to any alterations or additions to specified work.

B. Structural or other conditions may require certain modifications from the manner of installation shown, and such deviations are permissible and shall be made as required, but specified sizes and requirements necessary for satisfactory operations shall remain unchanged.

C. The drawings and these specifications are complementary to each other and what is called for by one shall be binding as if called for by both.

D. General arrangement of work is indicated on plans. Due to the small scale of the drawings, offsets, fittings, and boxes required are not all indicated; provide fittings, boxes, etc., as needed in accordance with codes and accepted practices.

1.8 SUPERVISION

A. The Contractor shall personally or through an authorized and competent representative, constantly supervise the work from beginning to completion and final acceptance. So far as possible, he shall keep the same foreman and workmen throughout the project duration.

B. During its progress, the work shall be subject to inspection by representatives of the Architect or Engineer, at which times the Contractor shall furnish required information.

C. It is not the Architect's or Engineer's duty to direct or guarantee the work of the Contractor, but to assist the Owner in obtaining a complete building in accordance with plans, specifications and addenda and to furnish engineering services in

accordance with recognized practices.

1.9 PRIOR APPROVALS

A. The Contractor shall base his proposal on materials as specified herein. Any references to a specific manufacturer or trade name is made to establish a standard of quality and to define a type of product and in no way is intended to indicate a preference for a particular manufacturer. It is the intent of these specifications to allow all manufacturers of equipment, products, etc., judged equal to the specified product to bid on a competitive basis.

1.10 MEASUREMENTS

A. The Contractor shall verify all measurements and shall be responsible for the correctness of same, before ordering any materials or doing any work. No extra charge or compensation will be allowed for any differences between the actual measurements and those indicated on the drawings.

1.11 LAWS, PERMITS AND FEES

A. The entire electrical work shall comply with the rules and regulations of the City, Parish, and State, including the State Fire Marshal and State Board of Health, whether so shown on plans or not. The Contractor shall pay fees for permits, inspections, etc., and shall arrange with the inspecting authorities all required inspections.

1.12 SITE INSPECTION

A. The Contractor shall visit the site and familiarize himself with difficulties attendant to the successful execution of the work before bidding. Failure to visit the site shall not relieve the Contractor of the extent or conditions of the work required of him.

1.13 TEMPORARY FACILTIES

A. The Contractor shall provide all temporary power and lighting for construction purposes. Installation of temporary power shall be in accordance with NEC Article 527.

B. Temporary facilities, wire, lights, and devices are the property of the contractor and shall be removed by the Contractor at the completion of the Contract.

PART 2 - PRODUCTS

2.1 MATERIAL AND EQUIPMENT

A. All materials, equipment, and accessories installed under this Contract, whether approved or not, shall be new and shall conform to all rules, codes, etc., as

recommended or adopted by the National Association(s) governing the manufacture, rating and testing of such materials, equipment, and accessories.

2.2 SHOP DRAWINGS & SUBMITTALS

A. Shop drawings shall be taken to mean detailed drawings with dimensions, schedules, weights, capacities installation details, and pertinent information that will be needed to describe the material or equipment in detail.

B. Submittals shall be taken to mean catalog cuts, general descriptive information, catalog numbers, and manufacturer's name.

C. Review of submittals or shop drawings shall not remove the responsibility for furnishing materials or equipment of proper dimensions, quantity and quality; nor will such review remove the responsibility for error in the shop drawings or submittals.

D. Assume all costs and liabilities, which may result from the ordering of any material, or equipment prior to the review of the shop drawings or submittals, and no work shall be done until the shop drawings or submittals have been reviewed. In case of correction or rejection, resubmit until such time as they are accepted by the Owner's representative and such procedures will not be cause for delay. After the final review, 6 copies will be supplied if requested.

E. Shop drawings and submittals will be returned unchecked if the specific items proposed are not clearly marked, or if the general Contractor's approval stamp is omitted.

F. Shop drawings, unless mark-ups are very trivial, will not be returned, "No Exception Taken". They will be returned for re-submittal as many times as necessary, however, the Contractor shall be back charged for engineering review time beginning with the second resubmittal. Therefore, the Contractor should make every effort to comply with the requirements of this Project on the first submittal in order to avoid project delays.

G. The Contractor shall submit to the Architect complete descriptive and dimensional data on the following items for review and approval when specified or provided:
1. Cable Tray
2. Disconnect Switches
3. Electrical Contactors
4. Electrical Controls and Time Switches
5. Emergency/Standby generator set and transfer switches
6. Enclosed Circuit Breakers
7. Fire Alarm System Panels, Initiation Devices, and Annunciation Devices
8. Fire Rated Cables and Connectors
9. Lighting Controls and Occupancy Sensors
10. Lighting Fixtures
11. Lightning Protection System
12. Panelboards and enclosures
13. Site Lighting Poles and Fixtures
14. Surface Raceways
15. Surge Protection Devices

16. Switchboards
17. Transformers
18. Wiring Devices

PART 3 - METHODS OF INSTALLATIONS

3.1 CONTRACTOR COORDINATION

A. The Drawings are diagrammatic in nature. Cooperate with other trades so the interferences of facilities and equipment will be avoided.

3.2 OPENINGS, CUTTING AND PATCHING

A. Cut all openings as required for the electrical work. Patching will be done by the various crafts whose work is involved. Furnish and install all necessary sleeves, thimbles, hangers, inserts, etc., at such times and in such a manner as not to delay or interfere with the work of other Contractors. Caulk, flash or otherwise make weatherproof all penetrations through the roof and exterior walls.

B. Where conduit, cable or other items that are provided for under this contract penetrate fire rated walls or floors, the Contractor is to seal around the item to maintain the integrity of the rated system.

3.3 PAINTING

A. Painting shall be performed as described in the painting specifications. No painting will be required by the Contractor except for touch-up of factory finishes on equipment furnished under this contract.

3.4 INSTALLATION

A. Housekeeping Pads: All floor and ground mounted electrical equipment - panels, switchboards, motor control centers, transformers, etc. shall be installed with a reinforced concrete housekeeping pad, whether shown on the drawings or not. The pad shall extend 4" above either the finished floor or final grade (as applicable), have 45 degree chamfered edges, and be constructed of 3000psi concrete. The pad shall extend 3" beyond the edge of the respective electrical equipment. Concrete shall have smooth steel trowel finish.

B. Equipment must be leveled and set plumb. Use corrosion resistant mounting hardware. For sheet metal enclosures mounted against a wall provide corrosion-resistant spaces to separate the wall by 1/4 inch or by 3 inches of air for freestanding units.

C. Unused knockouts on panels and boxes shall be covered with approved cover plates manufactured for the purpose.

3.5 TESTS AND INSPECTIONS

A. The Contractor shall assist in making periodic inspections or tests required by the Architect or Engineer. When requested, the Contractor shall provide the assistance of foremen and qualified craftsmen for reasonable duration of each test, etc.

B. The contract will not be declared to be substantially complete until all of the following conditions are satisfied.

1. the functional operation of the subsystems have been demonstrated and verified and reports have been provided, reviewed and accepted.
2. The "As-Built" drawings have been submitted, reviewed and accepted by the Architect / Owner / Owner's Construction Representative.

3.6 SAFETY PRECAUTIONS DURING CONSTRUCTION

A. It shall be the Contractor's responsibility to furnish and install proper guards and instruction signs for prevention of accidents and to provide and maintain for the duration of construction any installations needed for safety of life and property.

3.7 HEATING AND AIR CONDITIONING SYSTEM

A. This Contractor shall be responsible for providing electrical service to all devices of the heating and air conditioning system, and is referred to the mechanical plan for the exact location of the various devices.

3.8 LOAD BALANCING

A. Balance load on all phases in each panel to within 10% of respective phase loads.

3.9 IDENTIFICATION OF EQUIPMENT

A. Refer to specification 260553

3.10 COMPLETION

A. The Contractor shall leave all electrical equipment with proper connections, and in proper working order. He shall test the entire electrical system to show that it is properly installed. Contractor shall leave all panels and switches completely fused or complete with circuit breakers.

3.11 RECORD DRAWINGS

A. The Contractor shall furnish one (1) complete set of drawings on which any changes in the work shall be shown. In addition to changes in work, the contractor shall clearly indicate routing of all feeders both above and below ground. All underground

conduit shall be noted on drawings to show "as built" locations. These drawings must be turned over to the Architect prior to final acceptance of the work.

3.12 GUARANTEE

A. The Contractor shall guarantee to keep the entire electrical system as installed by him or his subcontractors in repair and in perfect working order for one (1) year from the date of the final Certification of Final Acceptance, and shall furnish free of cost to the Owner, all material and labor necessary to comply with the above guarantee; said guarantee shall be based upon defective material and workmanship. In any case where equipment has a factory warranty exceeding this one-year limit, the full extent of the warranty shall apply.

3.13 CLEANING

A. When all work has been finally tested, the Contractor shall clean all fixtures, equipment, conduits, ducts, and all exposed work. All cover plates and other finished products shall be thoroughly cleaned.

3.14 INSTRUCTION MANUALS

A. The Contractor shall provide three (3) operating and maintenance instruction manuals on all systems and equipment installed in the electrical work.

B. The Contractor shall provide (3) copies of all warranties and guarantees for systems, equipment, devices, and materials.

3.15 CONTRACTOR SPECIAL NOTE

A. The Contractor is again cautioned to refer to all parts of these Specifications and all Drawings, not just electrical sections, and the individual cross references made to other standard specifications or details describing any electrical work, which may be required under these other sections. The Contractor is cautioned to note carefully any other sections which may reference electrical work in order for this Contractor to fully understand the wiring requirements and electrical work that is required. Any conflicts found between the electrical sections of these Specifications or Drawings shall be immediately directed to the General Contractor for clarification.

B. These Specifications and the electrical Drawings size equipment, wire, conduit, etc. based on the horsepower of motors and/or wattages of equipment as shown on the plans or specified herein. The Contractor shall install electrical raceways, conductors, fuses, safety switches, breakers, contactors, starters or any other electrical equipment with the capacities to suit the horsepower and/or wattages of the equipment actually furnished and installed. The Contractor shall not furnish or install any electrical raceways, conductors, safety switches, contactors or motor starters of sizes smaller than those shown on the Drawings or specified herein. The Contractor shall coordinate with the various sections of the Specifications and/or Drawings and with the various Sub-

Contractors to provide the properly sized equipment without additional cost to the Owner.

END OF SECTION 260100

SECTION 260513 - MEDIUM VOLTAGE CABLES

PART 1 - GENERAL

1.1 RELATED DOCUMENTS

A. Drawings and general provisions of the Contract, including General and Supplementary Conditions and Division 01 Specification Sections, apply to this Section.

1.2 SUMMARY

A. Section includes cables and related cable splices, terminations, and accessories for medium-voltage (2001 to 35,000 V) electrical distribution systems.

1.3 DEFINITIONS

A. Jacket: A continuous nonmetallic outer covering for conductors or cables.

B. NETA ATS: Acceptance Testing Specification.

C. Sheath: A continuous metallic covering for conductors or cables.

1.4 ACTION SUBMITTALS

A. Product Data: For each type of cable. Include splices and terminations for cables and cable accessories.

B. Material Certificates: For each type of cable and accessory.

C. Source quality-control reports.

D. Field quality-control reports.

1.5 QUALITY ASSURANCE

A. Installer: Engage a cable splicer, trained and certified by splice material manufacturer, to install, splice, and terminate medium-voltage cable.

B. Source Limitations: Obtain cables and accessories through one source from a single manufacturer.

C. Electrical Components, Devices, and Accessories: Listed and labeled as defined in NFPA 70, Article 100, by a testing agency acceptable to authorities having jurisdiction, and marked for intended use.

D. Comply with IEEE C2 and NFPA 70.

1.6 FIELD CONDITIONS

A. Interruption of Existing Electric Service: Do not interrupt electric service to facilities occupied by Owner or others unless permitted under the following conditions and then only after arranging to provide temporary electric service according to requirements indicated:
   1. Notify Owner no fewer than 14 days in advance of proposed interruption of electric service.
   2. Do not proceed with interruption of electric service without Owner's written permission.

PART 2 - PRODUCTS

2.1 MANUFACTURERS

A. Manufacturers: Subject to compliance with requirements, provide products by one of the following:
   1. Cables:
      a. Kerite; a Marmon Wire & Cable/Berkshire Hathaway company.
      b. Okonite Company (The).
      c. Southwire Company.
   2. Cable Splicing and Terminating Products and Accessories:
      a. Engineered Products Company.
      b. G&W Electric Company.
      c. MP Husky.
      d. RTE Components; Cooper Power Systems, Inc.
      e. Thomas & Betts Corporation.
      f. Thomas & Betts Corporation/Elastimold.
      g. 3M; Electrical Markets Division.
      h. Tyco Electronics; Raychem Products.

B. Source Limitations: Obtain cables and accessories from single source from single manufacturer.

2.2 CABLES

A. Cable Type: Type MV 105.

B. Comply with UL 1072, AEIC CS8, ICEA S-93-639/NEMA WC 74, and ICEA S-97-682.

C. Conductor: Copper.

D. Conductor Stranding: Compact round, concentric lay, Class B.

E. Conductor Insulation: Ethylene-propylene rubber.
   1. Voltage Rating: 15kV.
   2. Insulation Thickness: 133 percent insulation level.

F. Shielding: Copper tape, helically applied over semiconducting insulation shield with minimum 12.5% overlap

G. Shielding and Jacket: Corrugated copper drain wires embedded in extruded, chlorinated, polyethylene jacket.

H. Three-Conductor Cable Assembly: Three insulated, shielded conductors cabled together with ground conductors.

I. Cable Jacket: Sunlight-resistant PVC.

2.3 CONNECTORS

A. Comply with ANSI C119.4 for connectors between aluminum conductors or for connections between aluminum to copper conductors.

B. Copper-Conductor Connectors: Copper barrel crimped connectors.

2.4 SOLID TERMINATIONS

A. Multiconductor Cable Sheath Seals: Type recommended by seal manufacturer for type of cable and installation conditions, including orientation.
   1. Heat-shrink sheath seal kit with phase- and ground-conductor rejacketing tubes, cable-end sealing boot, and sealing plugs for unused ground-wire openings in boot.
   2. Cold-shrink sheath seal kit with preformed sleeve openings sized for cable and insulated conductors.

B. Shielded-Cable Terminations: Comply with the following classes of IEEE 48. Insulation class shall be equivalent to that of cable. Include shield ground strap for shielded cable terminations.
   1. Class 1 Terminations: Modular type, furnished as a kit, with stress-relief tube; multiple, molded-silicone-rubber, insulator modules; shield ground strap; and compression-type connector.
   2. Class 3 Terminations: Kit with stress cone and compression-type connector.

2.5 SEPARABLE INSULATED CONNECTORS

A. Description: Modular system, complying with IEEE 386, with disconnecting, single-pole, cable terminators and with matching, stationary, plug-in, dead-front terminals designed for cable voltage and for sealing against moisture.

B. Terminations at Distribution Points: Modular type, consisting of terminators installed on cables and modular, dead-front, terminal junctions for interconnecting cables.

C. Load-Break Cable Terminators: Elbow-type units with 200-A-load make/break and continuous-current rating; coordinated with insulation diameter, conductor size, and material of cable being terminated. Include test point on terminator body that is capacitance coupled.

D. Dead-Break Cable Terminators: Elbow-type unit with 200 and 600-A continuous-current rating; designed for de-energized disconnecting and connecting; coordinated with insulation diameter, conductor size, and material of cable being terminated. Include test

point on terminator body that is capacitance coupled.

E. Dead-Front Terminal Junctions: Modular bracket-mounted groups of dead-front stationary terminals that mate and match with above cable terminators. Two-, three-, or four-terminal units as indicated, with fully rated, insulated, watertight conductor connection between terminals and complete with grounding lug, manufacturer's standard accessory stands, stainless-steel mounting brackets, and attaching hardware.
   1. Protective Cap: Insulating, electrostatic-shielding, water-sealing cap with drain wire.
   2. Portable Feed-Through Accessory: Two-terminal, dead-front junction arranged for removable mounting on accessory stand of stationary terminal junction.
   3. Grounding Kit: Jumpered elbows, portable feed-through accessory units, protective caps, test rods suitable for concurrently grounding three phases of feeders, and carrying case.
   4. Standoff Insulator: Portable, single dead-front terminal for removable mounting on accessory stand of stationary terminal junction. Insulators suitable for fully insulated isolation of energized cable-elbow terminator.

F. Test-Point Fault Indicators: Applicable current-trip ratings and arranged for installation in test points of load-break separable connectors, and complete with self-resetting indicators capable of being installed with shotgun hot stick and tested with test tool.

G. Tool Set: Shotgun hot stick with energized terminal indicator, fault-indicator test tool, and carrying case.

2.6 SPLICE KITS

A. Splice Kits: Comply with IEEE 404; type as recommended by cable or splicing kit manufacturer for the application.

B. Splicing Products: As recommended, in writing, by splicing kit manufacturer for specific sizes, materials, ratings, and configurations of cable conductors. Include all components required for complete splice, with detailed instructions.
   1. Combination tape and cold-shrink-rubber sleeve kit with rejacketing by cast-epoxy-resin encasement or other waterproof, abrasion-resistant material.

2.7 SOURCE QUALITY CONTROL

A. Test and inspect cables according to ICEA S-97-682 before shipping.

B. Test strand-filled cables for water-penetration resistance according to ICEA T-31-610, using a test pressure of 5 psig (35 kPa).

PART 3 - EXECUTION

3.1 INSTALLATION

A. Install cables according to IEEE 576.

B. Comply with NECA/NEMA 600 "Standard for Installing and Maintaining Medium-Voltage Cable" as published by the National Electrical Contractors Association.

C. Proof conduits prior to conductor installation by passing a wire brush mandrel and then a rubber duct swab through the conduit. Separate the wire brush and the rubber swab by 48 to 72 inches (1200 to 1800 mm) on the pull rope.
   1. Wire Brush Mandrel: Consists of a length of brush approximately the size of the conduit inner diameter with stiff steel bristles and an eye on each end for attaching the pull ropes. If an obstruction is felt, pull the brush back and forth repeatedly to break up the obstruction.
   2. Rubber Duct Swab: Consists of a series of rubber discs approximately the size of the conduit inner diameter on a length of steel cable with an eye on each end for attaching the pull ropes. Pull the rubber duct swab through the duct to extract loose debris from the duct.

D. Pull Conductors: Do not exceed manufacturer's recommended maximum pulling tensions and sidewall pressure values.
   1. Where necessary, use manufacturer-approved pulling compound or lubricant that does not deteriorate conductor or insulation.
   2. Use pulling means, including fish tape, cable, rope, and basket-weave cable grips, that do not damage cables and raceways. Do not use rope hitches for pulling attachment to cable.
   3. Use pull-in guides, cable feeders, and draw-in protectors as required to protect cables during installation.
   4. Do not pull cables with ends unsealed. Seal cable ends with rubber tape.

E. Install exposed cables parallel and perpendicular to surfaces of exposed structural members and follow surface contours where possible.

F. In manholes, handholes, pull boxes, junction boxes, and cable vaults, train cables around walls by the longest route from entry to exit; support cables at intervals adequate to prevent sag.

G. Install sufficient cable length to remove cable ends under pulling grips. Remove length of conductor damaged during pulling.

H. Install cable splices at pull points and elsewhere as indicated; use standard kits. Use dead-front separable watertight connectors in manholes and other locations subject to water infiltration.

I. Install terminations at ends of conductors, and seal multiconductor cable ends with standard kits.

J. Install separable insulated-connector components as follows:
   1. Protective Cap: At each terminal junction, with one on each terminal to which no feeder is indicated to be connected.
   2. Portable Feed-Through Accessory: At each terminal junction, with one on each terminal.
   3. Standoff Insulator: At each terminal junction, with one on each terminal.

K. Seal around cables passing through fire-rated elements

L. Ground shields of shielded cable at one point only. Maintain shield continuity and

connections to metal connection hardware at all connection points.

M. Identify cables according to Section 260553 "Identification for Electrical Systems." Identify phase and circuit number of each conductor at each splice, termination, pull point, and junction box. Arrange identification so that it is unnecessary to move the cable or conductor to read the identification.

N. Terminations at Medium Voltage Switchgear:
1. Properly torque bolted connections prior to the application of termination protection materials.
2. Protect all terminations to insulated bus or bushing connections.

O. Install separable insulated-connector components as follows:
1. Protective Cap: At each terminal junction, with one on each terminal to which no feeder is indicated to be connected.
2. Portable Feed-Through Accessory: Three.
3. Standoff Insulator: Three.

3.2 FIELD QUALITY CONTROL

A. Perform the following tests and inspections with the assistance of a factory-authorized service representative:
1. Perform each visual and mechanical inspection and electrical test stated in NETA ATS. Certify compliance with test parameters.
2. After installing medium-voltage cables and before electrical circuitry has been energized, test for compliance with requirements.
3. Perform direct-current High Potential test of each new conductor according to NETA ATS, Ch. 7.3.3. Do not exceed cable manufacturer's recommended maximum test voltage.

B. Medium-voltage cables will be considered defective if they do not pass tests and inspections.

C. Prepare test and inspection reports.

3.3 WARRANTY

A. Provide a forty year warranty after shipment of cable.

END OF SECTION 260513

SECTION 260519 - LOW-VOLTAGE ELECTRICAL POWER CONDUCTORS AND CABLES

PART 1 - GENERAL

1.1 RELATED DOCUMENTS

A. Drawings and general provisions of the Contract, including General and Supplementary Conditions and Specification Sections, apply to this Section.

1.2 SUMMARY

A. This Section includes the following:

1. building wires and cables rated 600V and less
2. Connectors, splices and terminations rated 600 V and less
3. Sleeves and sleeve seals for cables

1.3 QUALITY ASSURANCE

A. Electrical Components, Devices, and Accessories: Listed and labeled as defined in NFPA 70, Article 100, by a testing agency acceptable to authorities having jurisdiction, and marked for intended use.

B. Comply with NFPA 70- Latest edition or edition enforced by state and local code authority.

PART 2 - PRODUCTS

2.1 CONDUCTORS AND CABLES

A. Refer to Part 3 "Conductor and Insulation Applications" Article for insulation type, cable construction, and ratings.

C. Conductor Material: Copper unless indicated otherwise on Drawings; stranded conductor or solid conductor for No. 10 AWG and smaller, stranded for No. 8 AWG and larger.

D. Conductor Insulation Types: Comply with NEMA WC 70 for Types THHN-THWN, XHHW, and SO, as indicated.

E. Multiconductor Cables: Comply with NEMA WC 70; Exterior sheath color coded to differentiate cable voltages and quantity of phase conductors.

F. Description: Factory-fabricated connectors and splices of size, ampacity rating, material, type, and class for application and service indicated.

G. Conductor Temperature Rating: Provide conductors with 75 degree C rating. For high temperature applications, provide conductors with temperature ratings in accordance with NDPA 70 for ambient condition.

PART 3 - EXECUTION

3.1 CONDUCTOR AND INSULATION APPLICATIONS

A. Service Entrance: Type THHN-THWN, single conductors in raceway.

B. Exposed Feeders: Type THHN-THWN, single conductors in raceway.

C. Feeders Concealed in Ceilings, Walls, and Partitions: Type THHN-THWN, single conductors in raceway.

D. Feeders Concealed in Concrete, below Slabs-on-Grade, and in Crawlspaces: Type THHN- THWN, single conductors in raceway.

E. Exposed Branch Circuits, including in Crawlspaces: Type THHN-THWN, single conductors in raceway.

F. Branch Circuits Concealed in Ceilings, Walls, and Partitions: Type THHN-THWN, single conductors in raceway .

G. Branch Circuits Concealed in Concrete and below Slabs-on-Grade: Type THHN-THWN, single conductors in raceway.

H. Branch Circuits Installed below Raised Flooring: Type THHN-THWN, single conductors in raceway.

I. Fire Alarm Cabling: Plenum rated, exposed. Secured per NFPA 70-760.

J. Combining of more than three circuits in a conduit is not allowed. IE no more than three phase conductors.

K. Single Phase Circuits: Provide a dedicated neutral. Sharing of neutrals is not allowed.

L. Cord Drops and Portable Appliance Connections: Type SO, hard service cord with stainless-steel,wire-mesh, strain relief device at terminations to suit application.

3.2 INSTALLATION

A. Conceal cables in finished walls, ceilings, and floors, unless otherwise indicated.

B. Run feeders in continuous lengths, without joints or splices. Where continuous runs are impractical; obtain Engineer's approval for splice locations and application.

C. Run branch in continuous lengths, without joints or splices. Where continuous runs are

impractical it shall be permitted to splice, however no splices shall be permitted within in-grade pull boxes.

D. Make joints in branch circuits only where circuits divide.

E. Do not use gutters of panelboards as raceways, junction boxes, or pull boxes for conductors not terminating in said panelboards.

F. Run conduits for emergency power conductors separate from all other wiring.

G. Bundling Conductors: Bundle conductors in switchboards, panelboards, cabinets, and the like, using nylon ties made for the purpose. Bundle conductors larger than No. 10 in individual circuits. Smaller conductors may be bundled in larger groups.

H. Terminations of multiple branch circuit conductors on a single circuit breaker is not acceptable.

I. Install exposed cables parallel and perpendicular to surfaces of exposed structural members, and follow surface contours. Install all conductors in raceways, unless specifically noted otherwise.

J. Support cables according to Section "Basic Electrical Materials and Methods."

K. Identify and color-code conductors and cables according to Section "Identification for Electrical Equipment"

L. Sizes:

1. Provide conductors no smaller than No. 12 AWG, except for signal or control circuits.
2. Use #10 AWG conductors for 20 amperage 120V circuits when the circuit conductors are longer than 75 feet.
3. Use #10 AWG conductors for 20 amperage 277V circuits when the circuit conductors are longer than 200 feet.
4. Provide neutral conductors of the same size as the phase conductor(s) for individual branch circuit homeruns.

3.3 WIRE PULLING

A. Pull no conductors into conduits until all Work of a nature which may cause injury to conductors is completed.

B. Follow manufacturers' recommendations for regulating temperature conditions of conductors prior to installation.

C. Exercise care in handling and installing cables to avoid damage. Carefully form cables in equipment pull boxes. Form bends in cables larger than the minimum radii shown in the cable manufacturer's published data for minimum bends such that bends will not reduce the cable life.

D. Provide suitable installation equipment to prevent abrasion and cutting of conductors by raceways during the pulling of conductors. Use ropes of polyethylene, nylon or other suitable non-metallic material to pull in feeders. Metallic ropes are prohibited.

E. Before any wire is pulled into any conduit, thoroughly swab the conduit to remove all foreign material and to permit the wire itself to be pulled into a clean, dry conduit.

F. Use manufacturer-approved pulling compound or lubricant where necessary; compound used must not deteriorate conductor or insulation. Do not exceed manufacturer's recommended maximum pulling tensions and sidewall pressure values.

G. Use pulling means, including fish tape, cable, rope, and basket-weave wire/cable grips, that will not damage cables or raceway.

3.4 CONNECTIONS

A. Tighten electrical connectors and terminals according to manufacturer's published torque- tightening values. If manufacturer's torque values are not indicated, use those specified in UL 486A and UL 486B

B. Wiring at Outlets: Install conductor at each outlet, with at least 6 inches (150 mm) of slack.

C. Provide temperature ratings of connectors and splices to match wire rating.

END OF SECTION 260519

SECTION 260526 - GROUNDING AND BONDING FOR ELECTRICAL SYSTEMS

PART 1 - GENERAL

1.1 SUMMARY

A. NFPA 70 and IEEE C2 include basic grounding requirements for electrical safety. This Section supplements the minimum safety requirements of the Code with requirements for additional grounding and with optional grounding methods and materials for both power and electronic systems.

B. This Section includes methods and materials for grounding systems and equipment, plus the following special applications:

1. Underground distribution grounding.
2. Common ground bonding with lightning protection system.

C. Related Sections include the following:

1. Division 26 Section "Lightning Protection for Structures" for common ground bonding with lightning protection system.

1.2 QUALITY ASSURANCE

A. Testing Agency Qualifications: For independent agency as defined in Division 26 Section "Common Work Results for Electrical".

B. Electrical Components, Devices, and Accessories: Listed and labeled as defined in NFPA 70, Article 100, by a testing agency acceptable to authorities having jurisdiction, and marked for intended use.

C. Comply with UL 467 for grounding and bonding materials and equipment.

D. Comply with NFPA 70

E. Comply with NFPA 99

F. Comply with IEEE C2

G. Comply with ANSI/EIA/TIA 607

PART 2 - PRODUCTS

2.1 CONDUCTORS

A. Insulated Conductors: Copper or Tinned-Copper wire or cable insulated for 600 V

unless otherwise required by applicable Code or authorities having jurisdiction.

B. Bare Copper Conductors:

1. Solid Conductors: ASTM B 3.
2. Stranded Conductors: ASTM B 8.
3. Bonding Cable: 28 kcmil, 14 strands of No. 17 AWG conductor, 1/4 inch (6 mm) in diameter.
4. Bonding Conductor: No. 4 or No. 6 AWG, stranded conductor.
5. Bonding Jumper: Copper tape, braided conductors, terminated with copper ferrules; 1-5/8 inches (41 mm) wide and 1/16 inch (1.6 mm) thick.
6. Tinned Bonding Jumper: Tinned-copper tape, braided conductors, terminated with copper ferrules; 1-5/8 inches (41 mm) wide and 1/16 inch (1.6 mm) thick.
7. Main Bonding Jumper: stranded copper conductors sized as indicated on Drawings.
8. Grounding Electrode Conductor: stranded copper conductors sized as indicated on Drawings.
9. Common Grounding Electrode Conductor: stranded copper conductors sized as indicated on Drawings.

C. Grounding Bus: Rectangular bars of annealed copper, 1/4 by 4 inches (6 by 100 mm) in cross section, unless otherwise indicated; with insulators. Length as indicated on Drawings.

2.2 CONNECTORS

A. Listed and labeled by a nationally recognized testing laboratory acceptable to authorities having jurisdiction for applications in which used, and for specific types, sizes, and combinations of conductors and other items connected.

B. Bolted Connectors for Conductors and Pipes: Copper or copper alloy, bolted pressure-type, with at least two bolts.

1. Pipe Connectors: Clamp type, sized for pipe.

C. Welded Connectors: Exothermic-welding kits of types recommended by kit manufacturer for materials being joined and installation conditions.

2.3 GROUNDING ELECTRODES

A. Ground Rods: Copper-clad steel; 5/8 inch (16 mm) diameter by 120 inches (3000 mm) long, unless otherwise indicated.

PART 3 - EXECUTION

3.1 APPLICATIONS

A. Conductors: Install insulated solid conductor for No. 10 AWG and smaller, and insulated

stranded conductors for No. 8 AWG and larger, unless otherwise indicated.

B. Underground Grounding Conductors: Install bare tinned-copper conductor, No. 3/0 AWG minimum, unless otherwise indicated.

1. Bury at least 30 inches (762 mm) below grade.
2. Duct-Bank Grounding Conductor: Bury 12 inches above duct bank when indicated as part of duct bank installation.

C. Isolated Grounding Conductors: Green-colored insulation with continuous yellow stripe. On feeders with isolated ground, identify grounding conductor where visible to normal inspection, with alternating bands of green and yellow tape, with at least three bands of green and two bands of yellow.

D. Grounding Bus: Install in electrical and telephone/communications equipment rooms, in rooms housing service equipment, and elsewhere as indicated.

1. Install bus on insulated spacers 1 inch (25 mm), minimum, from wall 6 inches (150 mm) above finished floor, unless otherwise indicated.
2. Where indicated on both sides of doorways, route bus up to top of door frame, across top of doorway, down to specified height above floor, and connect to horizontal bus.

E. Conductor Terminations and Connections: Use the following connectors styles, unless otherwise indicated.

1. Pipe and Equipment Grounding Conductor Terminations: Bolted connectors.
2. Underground Connections: Exothermic Welded connectors, except at test wells and as otherwise indicated.
3. Connections to Ground Rods at Test Wells: Bolted connectors.
4. Connections to Structural Steel: Exothermic Welded connectors.
5. Connections to Ufer Ground: Exothermic Welded connectors.

F. Comply with ANSI-607 requirements for telephone/communications grounding riser

1. Provide two separate, independent, fully-sized grounding pathways to each telecommunication branch closets.
2. Interconnect vertical grounding risers horizontally at a minimum of every three floors, unless indicated otherwise.

3.2 GROUNDING UNDERGROUND DISTRIBUTION SYSTEM COMPONENTS

A. Comply with IEEE C2 grounding requirements.

B. Grounding Handholes: Install a driven ground rod through handhole floor, close to wall, and set rod depth so 4 inches (100 mm) will extend above finished floor. If necessary, install ground rod before handhole/manhole is placed and provide No. 1/0 AWG bare, tinned-copper conductor from ground rod into manhole through a waterproof sleeve in manhole wall. Protect ground rods passing through concrete floor with a double wrapping of pressure-sensitive insulating tape or heat-shrunk insulating sleeve from 2 inches (50 mm) above to 6 inches (150 mm) below concrete. Seal floor opening with

waterproof, nonshrink grout.

C. Pad-Mounted Transformers and Switches: The following is a minimum if the utility company does not have requirements, otherwise meet the utility company requirements. Install two ground rods and a ground ring around the pad. Ground pad-mounted equipment and noncurrent-carrying metal items associated with transformer, switch, or substations by connecting them to underground cable and grounding electrodes. Install tinned-copper conductor not less than No. 2 AWG for ground ring and for taps to equipment grounding terminals. Bury ground ring not less than 6 inches (150 mm) from the edge of foundation.

D. Grounding Connections to Manhole Components: Bond exposed-metal parts such as inserts, cable racks, pulling irons, ladders, and cable shields within each manhole or handhole, to ground rod or grounding conductor. Make connections with No. 4 AWG minimum, stranded, hard-drawn copper bonding conductor. Train conductors level or plumb around corners and fasten to manhole walls. Connect to cable armor and cable shields as recommended by manufacturer of splicing and termination kits

3.3 EQUIPMENT GROUNDING

A. Install insulated equipment grounding conductors with all feeders and branch circuits.

1. Bond to each device, box, or luminaire, unless otherwise indicated.
2. Conductor insulation of the same rating as the phase conductors, for all feeders and branch circuits. Install the grounding conductors in the raceway with related phase and neutral conductors.
3. Where parallel conductors in separate raceways occur, provide a grounding conductor in each raceway that meets requirements of NFPA 70.

B. Dry-Type Transformers: Install an insulated grounding conductor from the common point of connection of the transformer secondary neutral point and the transformer enclosure to the following:

1. The nearest grounding electrode per NFPA 70, including but not limited to building steel where available.
2. The grounding bus of the common electrode grounding system, located in the electrical equipment room.

C. Enclosures: Install an insulated grounding conductor from grounding bushings to the frame of the enclosure, ground bus, and equipment grounding strap where each occurs. Install grounding bushings on all raceways terminating within electrical enclosures constructed of separate enclosure panels, which are not integrally welded together.

D. Air-Duct Equipment Circuits: Install insulated equipment grounding conductor to duct-mounted electrical devices operating at 120 V and more, including but not limited to air cleaners, heaters, dampers, humidifiers, and other duct electrical equipment. Bond conductor to each unit and to air duct and connected metallic piping.

E. Water Heater, Heat-Tracing, and Antifrost Heating Cables: Install a separate insulated equipment grounding conductor to each electric water heater and heat-tracing

cable. Bond conductor to heater units, piping, connected equipment, and components.

F. Signal and Communication Equipment: For telephone, alarm, voice and data, and other communication equipment, provide No. 4 AWG minimum insulated grounding conductor in raceway from grounding electrode system to each service location, terminal cabinet, wiring closet, and central equipment location.

1. Service and Central Equipment Locations and Wiring Closets: Terminate grounding conductor on a 1/4-by-4 (6-by-1000) grounding bus. Length as indicated on the drawings.
2. Terminal Cabinets: Terminate grounding conductor on cabinet grounding terminal.

3.4 INSTALLATION

A. Provide permanent service neutral and equipment grounding in accordance with NFPA 70 and subject to the following additional requirements.

B. Grounding Conductors: Route along shortest and straightest paths possible, unless otherwise indicated or required by Code. Avoid obstructing access or placing conductors where they may be subjected to strain, impact, or damage.

C. Comply with mounting and support requirements specified in Division 26 Section "Hangers and Supports for Electrical Systems."

D. Connect the service neutral and equipment ground to a common point within the metallic enclosure containing the main service disconnecting means. Equipment grounds and the identified neutral of the wiring system shall not be interconnected beyond this point in the interior wiring system. From the common point of connection of the service neutral and the equipment ground, run in non-magnetic conduit a grounding electrode conductor without joint or splice to the grounding electrode system and connect it with an approved bolted pressure clamp.

E. Common Ground Bonding with Lightning Protection System: Comply with NFPA 780 and UL 96 when interconnecting with lightning protection system. Bond electrical power system ground directly to lightning protection system grounding conductor at closest point to electrical service grounding electrode. Use bonding conductor sized same as system grounding electrode conductor, and install in conduit.

F. Bonding Straps and Jumpers: Install in locations accessible for inspection and maintenance, except where routed through short lengths of conduit.

1. Bonding to Structure: Bond straps directly to basic structure, taking care not to penetrate any adjacent parts.
2. Bonding to Equipment Mounted on Vibration Isolation Hangers and Supports: Install so vibration is not transmitted to rigidly mounted equipment.
3. Use exothermic-welded connectors for outdoor locations, but if a disconnect-type connection is required, use a bolted clamp.
4. Where expansion joints or telescoping joints occur, provide bonding jumpers.

G. Grounding and Bonding for Piping:

1. Metal Water Service Pipe: Install insulated copper grounding conductors, in conduit, from building's main service equipment, or grounding bus, to main metal water service entrances to building. Connect grounding conductors to main metal water service pipes, using a bolted clamp connector or by bolting a lug-type connector to a pipe flange, using one of the lug bolts of the flange. Where a dielectric main water fitting is installed, connect grounding conductor on street side of fitting. Bond metal grounding conductor conduit or sleeve to conductor at each end.
2. Water Meter Piping: Use braided-type bonding jumpers to electrically bypass water meters. Connect to pipe with a bolted connector.
3. Bond each aboveground portion of gas piping system downstream from equipment shutoff valve.

H. Bonding Interior Metal Ducts: Bond metal air ducts to equipment grounding conductors of associated fans, blowers, electric heaters, and air cleaners. Install bonding jumper to bond across flexible duct connections to achieve continuity.

I. Ground Rods: Drive rods until tops are 12 inches (50 mm) below finished floor or final grade, unless otherwise indicated.

1. Interconnect ground rods with grounding electrode conductor a minimum of 30-inches below grade unless otherwise indicated. Make connections without exposing steel or damaging coating, if any.
2. For grounding electrode system, install at least three rods spaced at least two-rod lengths from each other and located at least the same distance from other grounding electrodes, and connect to the service grounding electrode conductor.

J. Test Wells: Ground rod driven through drilled hole in bottom of handhole. Handholes are specified in Division 26 Section "Underground Ducts and Raceways for Electrical Systems," and shall be at least 12 inches (300 mm) deep, with cover.

1. Test Wells: Install at least three test wells for each service, unless otherwise indicated. Install at the ground rod electrically closest to service entrance. Set top of test well flush with finished grade or floor.

K. Grounding for Steel Building Structure: Install a driven ground rod at base of each corner column and at intermediate exterior columns at distances not more than 60 feet (18 m) apart.

L. Ufer Ground (Concrete-Encased Grounding Electrode): Fabricate according to NFPA 70, using a minimum of 20 feet (6 m) of bare copper conductor not smaller than No. 4 AWG.

1. If concrete foundation is less than 20 feet (6 m) long, coil excess conductor within base of foundation.
2. Bond grounding conductor to reinforcing steel in at least four locations and to anchor bolts. Extend grounding conductor below grade and connect to building grounding grid or to grounding electrode external to concrete.

3.5 IDENTIFICATION

A. Identify field-installed conductors, interconnecting wiring, and components as specified in Division 26 Section "Identification for Electrical Systems."

3.6 FIELD QUALITY CONTROL

A. Perform the following field tests and inspections and prepare certified test reports:

1. After installing grounding system but before permanent electrical circuits have been energized, test for compliance with requirements.
2. Test completed grounding system at each location where a maximum at service disconnect enclosure grounding terminal, at ground test wells, at individual ground rods and locations where a ground-resistance level is specified,. Make tests at ground rods before any conductors are connected.
    a. Measure ground resistance not less than two full days after last trace of precipitation and without soil being moistened by any means other than natural drainage or seepage and without chemical treatment or other artificial means of reducing natural ground resistance.
    b. Perform tests by fall-of-potential method according to IEEE 81.
3. Prepare dimensioned drawings locating each test well, ground rod and ground rod assembly, and other grounding electrodes. Identify each by letter in alphabetical order, and key to the record of tests and observations. Include the number of rods driven and their depth at each location, and include observations of weather and other phenomena that may affect test results. Describe measures taken to improve test results.
4. Tests for patient-care areas: In addition to the test listed above, perform additional field tests and inspections for patient care areas.
    a. After installing grounding system but before permanent electrical circuits have been energized, test for compliance with requirements. Perform the following tests:
        1) Impedance: Measurement shall be made between the reference point and the grounding contact of all receptacles in the patient care room. The maximum limit allowed is 0.1 ohms.
        2) Voltage: Measurement shall be made under no-fault conditions between a reference point and all exposed fixed electrical equipment with conductive surfaces in the patent care vicinity, including but not limited to: overbed wall- mounted fixtures, ceiling mounted exam lights, sensor faucets, etc. The maximum limit allowed is 20mV.
    b. Prepare certified test reports in compliance with NFPA 99 and submit reports in conjunction with field quality control reports required in Division 26 Section "Wiring Devices". Utilize the Patient Care Area Electrical Testing Form in the Appendix of this section for each patient care area.

B. Excessive Ground Resistance: If resistance to ground exceeds specified values, notify Architect promptly and include recommendations to reduce ground resistance.

1. Report measured ground resistances that exceed the following values:
    a. Building's Grounding Triad: 2 ohms or less.

b. Power and Lighting Equipment or System with Capacity 500 kVA and Less: 10 ohms.
c. Power and Lighting Equipment or System with Capacity 500 to 1000 kVA: 5 ohms.
d. Power and Lighting Equipment or System with Capacity More Than 1000 kVA: 3 ohms.
e. Power Distribution Units or Panelboards Serving Electronic Equipment: 1 ohm(s).
f. Substations and Pad-Mounted Equipment: 5 ohms.
g. Manhole/Handhole Grounds: 10 ohms.

C. Correct Deficiencies, Retest and Report:

1. Correct unsatisfactory conditions, and retest to demonstrate compliance; replace conductors, units, and rods as required to bring system into compliance.
2. Prepare a report, certified by testing agency, which identifies components checked and describes results. Include notation of deficiencies detected, remedial action taken, and observations and test results after remedial action.

END OF SECTION 260526

SECTION 260529 - HANGERS AND SUPPORTS FOR ELECTRICAL SYSTEMS

PART 1 - GENERAL

1.1 RELATED DOCUMENTS

A. Drawings and general provisions of the Contract, including General and Supplementary Conditions and Division 01 Specification Sections, apply to this Section.

1.2 SUMMARY

A. This Section includes the following:

1. Hangers and supports for electrical equipment and systems.
2. Construction requirements for concrete bases.

1.3 DEFINITIONS

A. EMT: Electrical metallic tubing.

B. FMC: Flexible metal conduit.

C. IMC: Intermediate metal conduit.

D. RMC: Rigid metal conduit.

E. RAC: Rigid aluminum conduit.

F. RNC: Rigid nonmetallic conduit.

G. RSC: Rigid Steel conduit.

1.4 PERFORMANCE REQUIREMENTS

A. Delegated Design: Design supports for multiple raceways, raceways using NFPA 70 criteria and performance requirements and design criteria indicated.

1. Design supports for multiple raceways capable of supporting combined weight of supported systems and its contents.
2. Design equipment supports capable of supporting combined operating weight of supported equipment and connected systems and components.

B. Rated Strength: Adequate in tension, shear, and pullout force to resist maximum loads calculated or imposed for this Project, with a minimum structural safety factor of five times the applied force.

1.5 SUBMITTALS

A. Product Data: For the following:

1. Steel slotted support systems.
2. Nonmetallic slotted support systems.

B. Shop Drawings: Show fabrication and installation details and include calculations for the following:

1. Trapeze hangers. Include Product Data for components.
2. Steel slotted channel systems. Include Product Data for components.
3. Nonmetallic slotted channel systems. Include Product Data for components.
4. Equipment supports.
5. Concrete Based for Equipment.

C. Welding certificates.

1.6 QUALITY ASSURANCE

A. Welding: Qualify procedures and personnel according to AWS D1.1/D1.1M, "Structural Welding Code - Steel."

B. Comply with NFPA 70.

1.7 COORDINATION

A. Coordinate size and location of concrete bases. Cast anchor-bolt inserts into bases. Concrete, reinforcement, and formwork requirements are specified in Division 03.

B. Coordinate installation of roof curbs, equipment supports, and roof penetrations. These items are specified in Division 07 Section "Roof Accessories."

PART 2 - PRODUCTS

2.1 SUPPORT, ANCHORAGE, AND ATTACHMENT COMPONENTS

A. Steel Slotted Support Systems: Comply with MFMA-4, factory-fabricated components for field assembly.

1. Manufacturers: Subject to compliance with requirements, provide products by one of the following:

a. Allied Tube & Conduit.
b. Cooper B-Line, Inc.; a division of Cooper Industries.
c. ERICO International Corporation.
d. GS Metals Corp.
e. Thomas & Betts Corporation.

f. Unistrut; Tyco International, Ltd.
g. Wesanco, Inc.

2. Metallic Coatings: Hot-dip galvanized after fabrication and applied according to MFMA-4.
3. Nonmetallic Coatings: Manufacturer's standard PVC, polyurethane, or polyester coating applied according to MFMA-4.
4. Painted Coatings: Manufacturer's standard painted coating applied according to MFMA-4.
5. Channel Dimensions: Selected for applicable load criteria.

B. Nonmetallic Slotted Support Systems: Structural-grade, factory-formed, glass-fiber-resin channels and angles with 9/16-inch- (14-mm-) diameter holes at a maximum of 8 inches (200 mm) o.c., in at least 1 surface.

1. Available Manufacturers: Subject to compliance with requirements, manufacturers offering products that may be incorporated into the Work include, but are not limited to, the following:

a. Allied Tube & Conduit.
b. Cooper B-Line, Inc.; a division of Cooper Industries.
c. Fabco Plastics Wholesale Limited.
d. Seasafe, Inc.

2. Fittings and Accessories: Products of channel and angle manufacturer and designed for use with those items.
3. Fitting and Accessory Materials: Same as channels and angles, except metal items may be stainless steel.
4. Rated Strength: Selected to suit applicable load criteria.

C. Device Box Mounting Brackets and Stabilizer: Factory-fabricated sheet steel brackets for support of device boxes adjacent to or between studs.

1. Available Manufacturers: Subject to compliance with requirements, manufacturers offering products that may be incorporated into the Work include, but are not limited to, the following:

a. Cooper B-Line, Inc.; a division of Cooper Industries.
b. ERICO International Corporation.

D. Through-Stud Cable and Raceway Support Clips: Factory-fabricated spring steel clip for cables or raceways where run horizontally through metal studs.

1. Available Manufacturers: Subject to compliance with requirements, manufacturers offering products that may be incorporated into the Work include, but are not limited to, the following:

a. Cooper B-Line, Inc.; a division of Cooper Industries.
b. ERICO International Corporation.

E. Roof-mounted Raceway Support Blocking: Factory-fabricated support blocking for use under roof-mounted raceways. Wedge-shaped blocking constructed of 100% recycled UV-resistant Rubber with integral galvanized steel strut to accept raceway support clips.

1. Available Manufacturers: Subject to compliance with requirements, manufacturers offering products that may be incorporated into the Work include, but are not limited to, the following:

a. Cooper B-Line, Inc.; a division of Cooper Industries.
b. ERICO International Corporation.

F. Tee Bar Grid Box Hanger: Factory-fabricated metal electrical box hanger for supporting boxes at locations between ceiling system t-grid components. Height adjustable for various electrical box depths. Attached to ceiling tee bar with screws or integral clamp for stability. Includes tab for independent support wire attachment.

1. Available Manufacturers: Subject to compliance with requirements, manufacturers offering products that may be incorporated into the Work include, but are not limited to, the following:

a. Cooper B-Line, Inc.; a division of Cooper Industries.
b. ERICO International Corporation.

G. Raceway and Cable Supports: As described in NECA 1 and NECA 101.

H. Conduit and Cable Support Devices: Steel and malleable-iron hangers, clamps, and associated fittings, designed for types and sizes of raceway or cable to be supported.

I. Support for Conductors in Vertical Conduit: Factory-fabricated assembly consisting of threaded body and insulating wedging plug or plugs for non-armored electrical conductors or cables in riser conduits. Plugs shall have number, size, and shape of conductor gripping pieces as required to suit individual conductors or cables supported. Body shall be malleable iron.

J. Structural Steel for Fabricated Supports and Restraints: ASTM A 36/A 36M, steel plates, shapes, and bars; black and galvanized.

K. Mounting, Anchoring, and Attachment Components: Items for fastening electrical items or their supports to building surfaces include the following:

1. Powder-Actuated Fasteners: Threaded-steel stud, for use in hardened portland cement concrete, steel, or wood, with tension, shear, and pullout capacities appropriate for supported loads and building materials where used.

a. Available Manufacturers: Subject to compliance with requirements, manufacturers offering products that may be incorporated into the Work include, but are not limited to, the following:

1) Hilti Inc.
2) ITW Ramset/Red Head; a division of Illinois Tool Works, Inc.
3) MKT Fastening, LLC.
4) Simpson Strong-Tie Co., Inc.; Masterset Fastening Systems Unit.

2. Mechanical-Expansion Anchors: Insert-wedge-type, stainless steel, for use in hardened portland cement concrete with tension, shear, and pullout capacities appropriate for supported loads and building materials in which used.

    a. Available Manufacturers: Subject to compliance with requirements, manufacturers offering products that may be incorporated into the Work include, but are not limited to, the following:

        1) Cooper B-Line, Inc.; a division of Cooper Industries.
        2) Empire Tool and Manufacturing Co., Inc.
        3) Hilti Inc.
        4) ITW Ramset/Red Head; a division of Illinois Tool Works, Inc.
        5) MKT Fastening, LLC.

3. Concrete Inserts: Steel or malleable-iron, slotted support system units similar to MSS Type 18; complying with MFMA-4 or MSS SP-58.
4. Clamps for Attachment to Steel Structural Elements: MSS SP-58, type suitable for attached structural element.
5. Through Bolts: Structural type, hex head, and high strength. Comply with ASTM A 325.
6. Toggle Bolts: All-steel springhead type.
7. Hanger Rods: Threaded steel.

2.2 FABRICATED METAL EQUIPMENT SUPPORT ASSEMBLIES

A. Description: Welded or bolted, structural-steel shapes, shop or field fabricated to fit dimensions of supported equipment.

B. Materials: Comply with requirements in Division 05 Section "Metal Fabrications" for steel shapes and plates.

PART 3 - EXECUTION

3.1 APPLICATION

A. Comply with NECA 1 and NECA 101 for application of hangers and supports for electrical equipment and systems except if requirements in this Section are stricter.

B. Maximum Horizontal and Vertical Support Spacing for Raceway(s): Space supports for EMT, IMC, and RMC as required by NFPA 70, but in no case less than listed below:

1. For raceways 1" diameter and larger, provide one hanger at 8'-0" on center.
2. For raceways less than 1" diameter, provide one hanger at 5'-0" on center.

C. Minimum Hanger Rod Size for Raceway Supports: Minimum rod size shall be 1/4 inch (6 mm) in diameter.

D. Single Raceways or Cables:

1. For Raceways 1-1/4-inch (32mm) and smaller: Install adjustable steel band hanger suspended on threaded rod.
2. For Raceways larger than 1-1/4-inch (30mm): Install trapeze-type supports fabricated with steel slotted support system suspended on threaded rods. Size trapeze members, including the suspension rods, based on the support required for the size, and loaded weight of the conduits.

    a. Secure raceway or cable to support with two-bolt conduit clamps or single-bolt conduit clamps using spring friction action for retention in support channel.

E. Multiple Raceways or Cables: Install trapeze-type supports fabricated with steel slotted or other support system, sized so capacity can be increased by at least 25 percent in future without exceeding specified design load limits.

1. Secure raceways and cables to these supports with two-bolt conduit clampssingle-bolt conduit clamps using spring friction action for retention in support channel.

F. Spring-steel clamps designed for supporting single conduits without bolts may be used for 1-1/2-inch and smaller raceways serving branch circuits and communication systems above suspended ceilings and for fastening raceways to trapeze supports.

G. Corrosive Areas: Provide non-metallic slotted support systems for supports installed in corrosive areas. Corrosive areas include, but are not limited to the following:

1. Pools and Pool Equipment Areas.
2. Within 25-feet (7.62-m) of Cooling Towers and Air Cooled Chillers.

3.2 SUPPORT INSTALLATION

A. Comply with NFPA 70, NECA 1 and NECA 101 for installation requirements except as specified in this Article.

B. Raceway Support Methods: In addition to methods described in NECA 1, EMT IMC RMC EMT, IMC, and RMC may be supported by openings through structure members, as permitted in NFPA 70.

C. Fasten junction, pull and devices boxes securely to the building construction, independent of raceway system.

D. Install Device Box Mounting Brackets supported between two studs. Do not attached Receptacle boxes directly to a single stud.

E. Install Through-Stud Cable and Raceway Support Clips where cables or raceways run horizontally through metal studs.

F. Support raceways at a distance above suspended ceilings to permit removal of ceiling panels and luminaires.

G. Locate raceways so as not to hinder access to mechanical equipment.

H. Do not secure conductors, raceways, or supports to suspended ceiling hanger rods or wires.

I. Install Tee Bar Grid Box Hanger supported between two ceiling grid tee bars where devices boxes are located flush in recessed suspended ceilings.

1. Install at least one independent support rod from box hanger to structure.

J. Install Roof-mounted Raceway Support Blocking where raceways run on across roofing.

1. Coordinate installation of roof supports with items specified in Division 07 Section "Roof Accessories." Provide products compatible with rooftop materials included in the Work.

K. Strength of Support Assemblies: Where not indicated, select sizes of components so strength will be adequate to carry present and future static loads within specified loading limits. Minimum static design load used for strength determination shall be weight of supported components plus 200 lb.

L. Mounting and Anchorage of Surface-Mounted Equipment and Components: Anchor and fasten electrical items and their supports to building structural elements by the following methods unless otherwise indicated by code:

1. To Wood: Fasten with lag screws or through bolts.
2. To New Concrete: Bolt to concrete inserts.
3. To Masonry: Approved toggle-type bolts on hollow masonry units and expansion anchor fasteners on solid masonry units.
4. To Existing Concrete: Expansion anchor fasteners.
5. Instead of expansion anchors, powder-actuated driven threaded studs provided with lock washers and nuts may be used in existing standard-weight concrete 4 inches thick or greater. Do not use for anchorage to lightweight-aggregate concrete or for slabs less than 4 inches thick.
6. To Steel: Beam clamps (MSS Type 19, 21, 23, 25, or 27) complying with MSS SP-69 or Spring-tension clamps.
7. To Light Steel: Sheet metal screws.
8. Items Mounted on Hollow Walls and Nonstructural Building Surfaces: Mount cabinets, panelboards, disconnect switches, control enclosures, pull and junction boxes, transformers, and other devices on slotted-channel racks attached to substrate.

M. Drill holes for expansion anchors in concrete at locations and to depths that avoid reinforcing bars.

3.3 INSTALLATION OF FABRICATED METAL SUPPORTS

A. Comply with installation requirements in Division 05 Section "Metal Fabrications" for site-fabricated metal supports.

B. Cut, fit, and place miscellaneous metal supports accurately in location, alignment, and elevation to support and anchor electrical materials and equipment.

C. Field Welding: Comply with AWS D1.1/D1.1M.

3.4 CONCRETE BASES

A. Construct concrete bases of dimensions indicated but not less than 4 inches larger in both directions than supported unit, and so anchors will be a minimum of 10 bolt diameters from edge of the base.

B. Use 3000-psi, 28-day compressive-strength concrete. Concrete materials, reinforcement, and placement requirements are specified in Division 03 Section "Cast-in-Place Concrete."

C. Anchor equipment to concrete base.

1. Place and secure anchorage devices. Use supported equipment manufacturer's setting drawings, templates, diagrams, instructions, and directions furnished with items to be embedded.
2. Install anchor bolts to elevations required for proper attachment to supported equipment.
3. Install anchor bolts according to anchor-bolt manufacturer's written instructions.

3.5 PAINTING

A. Touchup: Clean field welds and abraded areas of shop paint. Paint exposed areas immediately after erecting hangers and supports. Use same materials as used for shop painting. Comply with SSPC-PA 1 requirements for touching up field-painted surfaces.

1. Apply paint by brush or spray to provide minimum dry film thickness of 2.0 mils.

B. Touchup: Comply with requirements in Division 09 painting Sections for cleaning and touchup painting of field welds, bolted connections, and abraded areas of shop paint on miscellaneous metal.

C. Galvanized Surfaces: Clean welds, bolted connections, and abraded areas and apply galvanizing-repair paint to comply with ASTM A 780.

END OF SECTION 260529

SECTION 260533 - RACEWAYS AND BOXES FOR ELECTRICAL SYSTEMS

PART 1 - GENERAL

1.1 RELATED DOCUMENTS

A. Drawings and general provisions of the Contract, including General and Supplementary Conditions Specification Sections, apply to this Section.

1.2 SUMMARY

A. This Section includes raceways, fittings, boxes, enclosures, and cabinets for electrical wiring.

B. Related Sections include the following:

1. Refer to architectural for firestopping materials and installation at penetrations through walls, ceilings, and other fire-rated elements.
2. "Wiring Devices" for devices installed in boxes and for floor-box service fittings.

1.3 DEFINITIONS

A. EMT: Electrical metallic tubing.

B. ENT: Electrical nonmetallic tubing.

C. FMC: Flexible metal conduit.

D. IMC: Intermediate metal conduit.

E. LFMC: Liquidtight flexible metal conduit.

F. LFNC: Liquidtight flexible nonmetallic conduit.

G. RNC: Rigid nonmetallic conduit.

1.4 SUBMITTALS

A. Product Data: For surface raceways, floor boxes, and cabinets.

B. Shop Drawings: Shop Drawings: For the following raceway components. Include plans, elevations, sections, details, and attachments to other work.

1. Custom enclosures and cabinets.

C. Coordination Drawings: Submit Coordination Drawings in accordance with Division 26 Section "Basic Electrical Requirements". Include the following:

1. Raceway routing plans, on which the following items are shown and coordinated with each other, based on input from installers of the items involved:

a. Proposed cable pull points.
b. Structural members in the paths of conduit groups with common supports.
c. HVAC, plumbing items, and architectural features in the paths of conduit groups. Denote where systems share common supports.
d. Purposed splice locations.

1.5 QUALITY ASSURANCE

A. Electrical Components, Devices, and Accessories: Listed and labeled as defined in NFPA 70, Article 100, by a testing agency acceptable to authorities having jurisdiction, and marked for intended use.

B. Comply with NFPA 70-Latest edition or edition enforced by state and local code authority.

1.6 COORDINATION

A. Coordinate layout and installation of raceways, boxes, enclosures, cabinets, and suspension system with other construction that penetrates ceilings or is supported by them, including light fixtures, HVAC equipment, fire-suppression system, and partition assemblies.

PART 2 - PRODUCTS

2.1 METAL WIREWAYS

A. Material and Construction: Sheet metal sized and shaped as indicated.

1. Indoors: NEMA-1
2. Outdoors: NEMA-3R

B. Fittings and Accessories:

1. Include couplings, offsets, elbows, expansion joints, adapters, hold- down straps, end caps, and other fittings to match and mate with wireways as required for complete system.
2. Provide spring nuts or guards on all screws installed toward the inside to prevent wire insulation damage.

C. Select features, unless otherwise indicated, as required to complete wiring system and to comply with NFPA 70 and UL 870.

D. Wireway Covers:

1. Hinged type unless access restrictions require screw-cover type.
2. Flanged-and-gasketed as required for NEMA type

E. Finish: Manufacturer's standard enamel finish.

2.2 SURFACE RACEWAYS

A. Surface Metal Raceways: Galvanized steel with snap-on covers. Finish with manufacturer's standard prime coating and two coats of paint. Color by Architect.

B. Surface Nonmetallic Raceways: Two-piece construction, manufactured of rigid PVC with texture and color selected by Architect from manufacturer's standard colors.

C. Surface raceways used together with couplings, clips, bushings, straps, connectors, connection covers, elbows, boxes, extension boxes, fixture boxes, extension adapters, blank covers and all other required fittings; size to accommodate the conductors to be installed therein in each case.

2.3 BOXES, ENCLOSURES, AND CABINETS

A. Floor Boxes: Cast metal, fully adjustable, rectangular with four separate wiring compartments for power outlets, phone and data outlets as indicated on the drawing.

1. Provide products by the following manufactures or submit prior approval for equals.

   a. T&B 665 Series
   b. Legrand Evolution Series

2. Covers shall be UL Listed to U.S. and Canadian safety standards for tile, carpet, wood, bare concrete and terrazzo floors. Covers shall be selected by the architect.

B. Poke Thru Floor Boxes: Two hour rated poke thru floor unit with capabilities of four power receptacles and four communication outlets. Provide power , data and phone outlets indicated on drawing.

1. Provide products by the following manufactures or submit prior approval for equals.

   a. Hubbell SystemOne
   b. Legrand Evolution
   c. T&B FPT4 Series

2. Covers shall be selected by the architect.
3. Poke thru floor boxes are to be utilized on upper floors unless noted otherwise. There must be accessibility in the space below the poke thru box.

C. Sheet Metal Pull and Junction Boxes: NEMA OS 1.

D. Cast-Metal Pull and Junction Boxes: NEMA FB 1, cast aluminum, type FD with gasketed cover.

E. Hinged-Cover Enclosures: with continuous hinge cover and flush latch.

1. Metal Enclosures: Steel, finished inside and out with manufacturer's standard enamel.
2. Nonmetallic Enclosures: Plastic, finished inside with radio-frequency-resistant paint.
3. Ratings:

a. Indoor Locations: NEMA 250, Type 1.
b. Outdoor Locations: NEMA 250, Type 3R.

F. Cabinets:

1. Hinged door in front cover with flush latch and concealed hinge.
2. Key latch to match panelboards.
3. metal barriers to separate wiring of different systems and voltage and
4. Accessory feet where required for freestanding equipment.
5. Feet: Provide accessory feet for free standing equipment.
6. Ratings:

a. Indoor Locations: NEMA 250, Type 1.
b. Outdoor Locations: NEMA 250, Type 3R.

G. In Grade Enclosures, Boxes And Covers:

1. required to conform to all test provisions of the most current ANSI/SCTE 77 for Tier 22 applications.
2. When multiple "Tiers" are specified the boxes must physically accommodate and structurally support compatible covers while possessing the highest Tier rating.
3. All covers are required to have the Tier level rating embossed on the surface. In no assembly can the cover design load exceed the design load of the box.
4. Cover to be labeled per use of box, ie "Electrical, Communications, etc". Communications pull boxes shall be a minimum of 24"W X 36"L X 36 "D.

2.4 FACTORY FINISHES

A. Finish: For raceway, enclosure, or cabinet components, provide manufacturer's standard prime- coat finish ready for field painting.

2.5 METAL CONDUIT AND TUBING

A. Rigid Steel Conduit: Comply with ANSI C80.1 and UL 6; Galvanized rigid steel, each length with a coupling on one end and thread protector on opposite end.

B. Aluminum Rigid Conduit: Comply with ANSI C80.5 and UL 6A; Rigid aluminum, each length with a coupling on one end and thread protector on opposite end.

C. IMC: Comply with ANSI C80.6. and UL 1242.

D. Plastic-Coated Steel Conduit and Fittings: Comply with NEMA RN 1; PVC-coated RSC with 0.040 inch (1 mm), minimum coating thickness.

E. EMT and Fittings: ANSI C 80.3 and UL 797

F. FMC: Aluminum

G. LFMC: Comply with UL 360; Flexible steel conduit with neoprene jacket and copper grounding strand.

H. Conduit fittings for Hazardous (Classified) Locations: Comply with UL 886.

I. Fittings for RSC, RAC and IMC: Provide factory made threaded couplings of same material as the conduit.

1. Molded thermoplastic insulating bushing at all boxes and cabinets, with locknuts inside and outside box or cabinet. In wet locations, provide watertight hubs for conduit entry into enclosures.
2. Thermoplastic insulated grounding bushing on all conduits where grounding bushings are required, with locknuts inside and outside the enclosure. In wet locations provide watertight hubs for conduit entry into enclosures.
3. Provide bushings on all conduits 1" or larger.

J. Fittings for EMT:

1. Steel, set-screw or compression couplings.
2. Steel, set-screw or compression insulated throat box connectors with molded thermoplastic insulating bushing at all boxes and cabinets, with locknuts inside box or cabinet.
3. Steel, set-screw or compression insulated throat box connectors with thermoplastic insulated grounding bushing on all tubing where grounding bushings are required.
4. Insulated throat material for fittings to be of a color that is easily distinguishable; clear thermoplastic throats are not acceptable.

5. Provide bushings on all conduits 1" or larger.
6. Provide thermoplastic bushings on all conduits for telecommunications, data, fire alarm cabling and similar.

K. Fittings for FMC and LFMC:

1. Adapters at connections between flexible and rigid conduit.
2. Thermoplastic insulated throat, steel connectors at box or cabinet terminations.
3. Insulated throat material for fittings to be of a color that is easily distinguishable; clear thermoplastic throats are not acceptable.

L. Fittings for Conduit (Including all Types and Flexible and Liquidtight), EMT, and Cable:NEMA FB 1; listed for type and size raceway with which used, and for application and environment in which installed.

M. Joint Compound for RSC or IMC: Listed for use in cable connector assemblies, and compounded for use to lubricate and protect threaded raceway joints from corrosion and enhance their conductivity.

PART 3 - EXECUTION

3.1 RACEWAY APPLICATION

A. Outdoors:

1. Exposed: RSC, RAC, or IMC.
2. Concealed: RSC, RAC, or IMC.
3. Underground, Single Run: RNC.
4. Underground, Grouped: RNC.
5. Emergency Feeders: RSC
6. Connection to Vibrating Equipment (Including Transformers and Hydraulic, Pneumatic, Electric Solenoid, or Motor-Driven Equipment): LFMC.
7. Boxes and Enclosures: NEMA 250, Type 3R, unless otherwise indicated.

B. Indoors:

1. Exposed, Not Subject to Physical Damage: EMT.Concealed: EMT.
2. Exposed and Subject to Physical Damage: RSC, or IMC. Includes, but is not limited to, raceways in the following locations:

    a. Loading dock
    b. Areas used for traffic of mechanized carts, forklifts, and pallet-handling units.

3. Concealed within Masonry Walls: RSC, or IMC.
4. Concealed under Raised Floors: EMT or LFMC.
5. Elevator Pits: RAC, RSC, IMC, or LFMC.

6. Emergency feeders and branch circuits: EMT
7. Conductors over 600 volts: RAC, RSC, or IMC.
8. Connection to Vibrating Equipment (Including Transformers and Hydraulic, Pneumatic, Electric Solenoid, or Motor-Driven Equipment): FMC; except use LFMC in damp or wet locations.
9. Damp or Wet Locations above Ground: RAC, RSC, or IMC
10. Boxes and Enclosures: NEMA 250, Type 1, except as follows:

    a. Damp or Wet Locations: NEMA 250, Type 4, stainless steel.

C. Minimum Raceway Size:

1. Branch Circuits:3/4-inch (21mm) trade size
2. Feeder Circuits: 3/4-inch (21mm)

D. Provide minimum 1/2-inch (16-mm) conduit for controls circuiting.

E. Raceway Fittings: Compatible with raceways and suitable for use and location.

1. RAC, RSC and IMC: Use threaded fittings, unless otherwise indicated.

F. Junction and Pull Boxes: Sheet steel boxes, unless noted or required otherwise.

1. Provide boxes no smaller than 4 inches square and 1-1/2 inches deep.
2. Size all junction and pull boxes in accordance with the NFPA 70, unless project conditions dictate use of larger boxes.

G. Outlet and Device Boxes: Sheet steel boxes, unless noted or required otherwise.

1. For Lighting Fixture Outlets: 4 inch square with raised fixture ring.
2. For Wall Switches, Receptacles, and Communication Use: 4 inch square, one-piece. Use boxes with plaster rings in all plastered walls where wall thickness permits. Use boxes less than 1-1/2 inch deep only in locations where deep boxes cannot be accommodated by construction.
3. Boxes Used Outdoors or in Damp/Wet Locations: Cast metal boxes with gasketed covers and threaded hubs.

3.2 INSTALLATION

A. Install raceways a minimum of 6-inches (150 mm) away from parallel runs of flues, steam pipes,hot-water pipes, and other objects operating at high temperatures

B. Install horizontal raceway runs above water and steam piping. Install raceways a minimum of 1-inch (25.4-mm) frompipe insulation.

C. Complete raceway installation before starting conductor installation.

D. Support raceways as specified in "Basic Electrical Requirements."

E. Install temporary closures to prevent foreign matter from entering raceways.

F. Recessed Boxes in Fire-Rated Partitions: For boxes located on opposite sides of same partition do not install boxes back-to-back; separate boxes with a minimum of 24 inch separation

G. Recessed Boxes in partitions around Acoustically-Sensitive Spaces: For boxes located on opposite sides of same partition do not install boxes back-to-back; separate boxes with a minimum of 24 inch separation. Acoustically-Sensitive Spaces include, but are not limited to,the following:

1. Conference Rooms, Meeting rooms and similar spaces.
2. Classrooms, Training Rooms and similar spaces.
3. Interview Rooms, Consultation Rooms and similar spaces.
4. Auditoriums, Lecture Rooms, and similar spaces.
5. Ballrooms, Private Dinning, and similar spaces.

H. Do not install aluminum conduits in contact with concrete.

I. Make bends and offsets so ID is not reduced. Keep legs of bends in the same plane and keep straight legs of offsets parallel, unless otherwise indicated.

J. Conceal conduit:

1. EMT shall be installed within finished walls, ceilings, and floors, unless otherwise indicated.
2. Install concealed raceways with a minimum of bends in the shortest practical distance, considering type of building construction and obstructions, unless otherwise indicated.
3. On concealed conduit systems where boxes are not otherwise accessible, set boxes flush with finished surfaces for access, and provide overlapping covers.

K. Raceways Embedded in Slabs: Install in middle 1/3 of slab thickness where practical and leave at least 2 inches (50 mm) of concrete cover.

1. Secure raceways to reinforcing rods to prevent sagging or shifting during concrete placement.
2. Space raceways laterally to prevent voids in concrete.
3. Run conduit larger than 1-inch trade size (DN 27) parallel or at right angles to main reinforcement. Where at right angles to reinforcement, place conduit close to slab support.

L. Install exposed raceways parallel or at right angles to nearby surfaces or structural members and follow surface contours as much as possible.

1. Run parallel or banked raceways together on common supports.
2. Make parallel bends in parallel or banked runs. Use factory elbows only where elbows can be installed parallel; otherwise, provide field bends for parallel raceways.

M. Join raceways with fittings designed and approved for that purpose and make joints tight.

1. Use insulating bushings to protect conductors.

N. Terminations:

1. Where raceways are terminated with locknuts and bushings, align raceways to enter squarely and install locknuts with dished part against box. Use two locknuts, one inside and one outside box.
2. Where raceways are terminated with threaded hubs, screw raceways or fittings tightly into hub so end bears against wire protection shoulder. Where chase nipples are used, align raceways so coupling is square to box; tighten chase nipple so no threads are exposed.

O. Stub-up Connections:

1. Extend conduits through concrete floor for connection to freestanding equipment. Install with an adjustable top or coupling threaded inside for plugs set flush with finished floor.
2. Extend conductors to equipment with rigid steel conduit; FMC may be used 6 inches (150 mm) above the floor. Install screwdriver-operated, threaded plugs flush with floor for future equipment connections.
3. Protect stub-ups from damage where conduits rise through floor slabs. Arrange so curved portions of bends are not visible above the finished slab.
4. Change from ENT to RAC, RSC, or IMC before rising above the floor.

P. Flexible Conduit Connections:

1. Use minimum of 72 inches at final connections to equipment subject to vibration, noise transmission, or movement; and for transformers and motors.
2. Use LFMC in damp or wet locations subject to severe physical damage including mechanical equipment rooms, at motor or equipment locations at or near pumps, and when installed outdoors.
3. Use LFMC in damp or wet locations not subject to severe physical damage.

Q. Install covers on junction boxes and conduit bodies after wiring and connections are completed.

R. Run conductors over 48 Volts in raceway, unless otherwise indicated.

S. Surface Raceways: Install a separate, green, ground conductor in raceways from junction box supplying raceways to receptacle or fixture ground terminals.

T. Pull Boxes:

1. Install no more than the equivalent of three 90-degree bends and a maximum of 150 feet between pull points in any conduit run except for communications conduits, for which fewer bends are allowed.
2. Provide boxes where shown and where necessary for the installation and pulling of cables and wires.

U. Pull Wires:

1. Install pull wires in empty raceways. Use polypropylene or monofilament plastic line with not less than 200-lb (90-kg) tensile strength.
2. Leave at least 12 inches (300 mm) of slack at each end of pull wire.

V. Install hinged-cover enclosures and cabinets plumb. Support at each corner.

3.3 PROTECTION

A. Provide final protection and maintain conditions that ensure coatings, finishes, and cabinets are without damage or deterioration at time of Substantial Completion.

1. Repair damage to galvanized finishes with zinc-rich paint recommended by manufacturer.
2. Repair damage to PVC or paint finishes with matching touchup coating recommended by manufacturer.

3.4 CLEANING

A. After completing installation of exposed, factory-finished raceways and boxes, inspect exposed finishes and repair damaged finishes.

END OF SECTION 260533

SECTION 260543 - UNDERGROUND DUCTS AND RACEWAYS FOR ELECTRICAL SYSTEMS

PART 1 GENERAL

1.1 SUMMARY

A. This Section includes the following:

1. Conduit, ducts, and duct accessories for direct-buried and concrete-encased duct banks, and in single duct runs.
2. Handholes and boxes.
3. Manholes.

B. Related Sections include the following:

1. Division 26 Section "Raceways and Boxes for Electrical Systems" for raceways, fittings, boxes, enclosures, and cabinets for electrical wiring.

1.2 DEFINITION

A. Duct: an underground raceway. This term may be used interchangeably with the term raceway.

B. Duct Bank: two or more raceways grouped together, irrespective of duct material or encasement material.

C. RMC: Rigid metal conduit.

D. RNC: Rigid nonmetallic conduit.

E. RSC: Rigid Steel conduit.

1.3 SUBMITTALS

A. Product Data: For the following:

1. Duct-bank materials, including separators and miscellaneous components.
2. Ducts and conduits and their accessories, including elbows, end bells, bends, fittings, and solvent cement.
3. Accessories for manholes, handholes, boxes, and other utility structures.
4. Warning tape.
5. Warning planks.

B. Shop Drawings for Precast or Factory-Fabricated Underground Utility Structures: Include plans and elevations with dimensions and weights. Include sections, details, attachments to other work, and accessories, including the following:

1. Duct entry provisions, including locations and duct sizes.
2. Reinforcement details.
3. Frame and cover design and manhole frame support rings.
4. Ladder details.
5. Grounding details.
6. Dimensioned locations of cable rack inserts, pulling-in and lifting irons, and sumps.
7. Joint details.

C. Shop Drawings for Factory-Fabricated Handholes and Boxes Other Than Precast Concrete: Include dimensioned plans, sections, and elevations, and fabrication and installation details, including the following:

1. Duct entry provisions, including locations and duct sizes.
2. Cover design.
3. Grounding details.
4. Dimensioned locations of cable rack inserts, and pulling-in and lifting irons.

D. Coordination Drawings: Submit Coordination Drawings including:

1. Duct-Bank, Manhole, and Handhole plans, sections and elevation profiles; on which the following items are shown and coordinated with each other, based on input from installers of the items invlolved:

   a. Duct banks included in the Work. Denote duct routing including bends and locations of expansion fittings. Include system profiles and elevations.
   b. Other utilities, underground structures, architectural features, and topographic elements in the paths of duct banks. Denote system profiles and elevations.
   c. Precast or Factory-Fabricated Underground Utility Structures.
   d. Factory-Fabricated Handholes and Boxes.

E. Product Certificates: For concrete and steel used in precast concrete manholes and handholes, as required by ASTM C 858.

1.4 QUALITY ASSURANCE

A. Comply with ANSI C2.

B. Comply with NFPA 70.

1.5 COORDINATION

A. Coordinate layout and installation of ducts, manholes, handholes, and boxes with final arrangement of other utilities, site grading, and surface features as determined in the field. Verify field measurements, routing and termination locations of duct bank prior to excavation for rough-in. Coordinate duct bank installation with underground Work and site Work and other site improvement Work specified in other Divisions.

B. Coordinate elevations of ducts and duct-bank entrances into manholes, handholes, and boxes with final locations and profiles of ducts and duct banks as determined by coordination with other utilities, underground obstructions, and surface features. Duct bank routing as indicated on the Drawings is the approximate location. Revise locations and elevations from those indicated as required to suit field conditions and to ensure that duct runs drain to manholes and handholes, and as approved by Engineer.

C. Accurately record actual routing of duct bank on Project record documents, and submit in accordance with Division 01.

PART 2 PRODUCTS

2.1 METAL CONDUIT AND DUCTS

A. RMC: Comply with ANSI C80.1 and UL 6; Galvanized rigid steel, each length with a coupling on one end and thread protector on opposite end.

B. Fittings for RMC: Provide factory made threaded couplings of same material as the conduit.

1. Molded thermoplastic insulating bushing at all boxes and cabinets, with locknuts inside and outside box or cabinet. In wet locations, provide watertight hubs for conduit entry into enclosures.
2. Thermoplastic insulated grounding bushing on all conduits where grounding bushings are required, with locknuts inside and outside the enclosure. In wet locations provide watertight hubs for conduit entry into enclosures.

2.2 NONMETALLIC CONDUIT AND DUCTS

A. RNC: Comply with NEMA TC 2 and UL 651, type EPC-40-PVC or type EPC-80-PVC as indicated.

B. Fittings for RNC: Comply with NEMA TC 3 and UL 514B.; match to conduit or tubing type and material.

2.3 DUCT ACCESSORIES

A. Duct Separators: Factory-fabricated rigid PVC interlocking spacers, sized for type and sizes of ducts with which used, and selected to provide minimum duct spacings indicated while supporting ducts during concreting or backfilling.

B. Corrosion Resistance Tape for RSC: 20 mil polyvinyl chloride (PVC) tape with a high-tack adhesive and pipe primer to provide a corrosion- and impact-resistant seal.

C. Warning Tape: Underground-line warning tape specified in Division 26 Section "Identification for Electrical Systems."

2.4 PRECAST CONCRETE HANDHOLES AND BOXES

A. Available Manufacturers: Subject to compliance with requirements, manufacturers offering products that may be incorporated into the Work include, but are not limited to, the following:

1. Christy Concrete Products.
2. Oldcastle Precast Group.
3. Riverton Concrete Products; a division of Cretex Companies, Inc.
4. Utility Concrete Products, LLC.
5. Hubbel

B. Comply with ASTM C 858 for design and manufacturing processes.

C. Description: Factory-fabricated, reinforced-concrete, monolithically poured walls and bottom unless open-bottom enclosures are indicated. Frame and cover shall form top of enclosure and shall have load rating consistent with that of handhole or box.

1. Frame and Cover: Weatherproof steel frame, with steel cover with recessed cover hook eyes and tamper-resistant, captive, cover-securing bolts.
2. Cover Finish: Nonskid finish shall have a minimum coefficient of friction of 0.50.
3. Cover Legend: Molded lettering, selected to suit system or as otherwise required.
    a. "ELECTRIC-HV" for duct systems with power wires and cables operating over 600 V.
4. Configuration: Units shall be designed for flush burial and have integral closed bottom, unless otherwise indicated.
5. Extensions and Slabs: Designed to mate with bottom of enclosure. Same material as enclosure.
    a. Extension shall provide increased depth as required.
    b. Slab: Same dimensions as bottom of enclosure, and arranged to provide closure.
6. Handholes 12 inches wide by 24 inches long (300 mm wide by 600 mm long) and larger shall have inserts for cable racks and pulling-in irons installed before concrete is poured.

2.5 HANDHOLES AND BOXES OTHER THAN PRECAST CONCRETE

A. Description: Comply with SCTE 77.

1. Color: Gray for paved areas and Green for landscaped areas, unless otherwise indicated.
2. Configuration: Units shall be designed for flush burial and have integral closed bottom, unless otherwise indicated.
3. Cover: Weatherproof, secured by tamper-resistant locking devices and having structural load rating consistent with enclosure.
4. Cover Finish: Nonskid finish shall have a minimum coefficient of friction of 0.50.

5. Cover Legend: Molded lettering, selected to suit system or as otherwise required.

    a. Legend: "ELECTRIC-LV" for duct systems with power wires and cables operating at 600 V and less.
    b. Legend: "ELECTRIC-HV" for duct systems with power wires and cables operating over 600 V.
    c. Legend: "SIGNAL" for communications, data, and telephone duct systems.

6. Handholes 12 inches wide by 24 inches long (300 mm wide by 600 mm long) and larger shall have factory-installed inserts for cable racks and pulling-in irons.

B. Polymer Concrete Handholes and Boxes with Polymer Concrete Cover: Molded of sand and aggregate, bound together with a polymer resin, and reinforced with steel or fiberglass or a combination of the two.

1. Available Manufacturers: Subject to compliance with requirements, manufacturers offering products that may be incorporated into the Work include, but are not limited to, the following:

    a. Armorcast Products Company.
    b. Carson Industries LLC.
    c. CDR Systems Corporation.
    d. NewBasis.

2.6 UTILITY STRUCTURE ACCESSORIES

A. Available Manufacturers: Subject to compliance with requirements, manufacturers offering products that may be incorporated into the Workinclude, but are not limited to, the following:

1. Bilco Company (The).
2. Campbell Foundry Company.
3. Christy Concrete Products.
4. East Jordan Iron Works, Inc.
5. Neenah Foundry Company.
6. NewBasis.
7. Oldcastle Precast Group.
8. Osburn Associates, Inc.
9. Pennsylvania Insert Corporation.
10. Riverton Concrete Products; a division of Cretex Companies, Inc..
11. Strongwell Corporation; Lenoir City Division.
12. Underground Devices, Inc.
13. Utility Concrete Products, LLC.

B. Manhole Frames, Covers, and Chimney Components: Comply with structural design loading specified for manhole.

1. Frame and Cover: Weatherproof, gray cast iron complying with ASTM A 48/A 48M, Class 30B or cast aluminum with milled cover-to-frame bearing surfaces;

diameter, 29 inches (737 mm).

a. Cover Finish: Nonskid finish shall have a minimum coefficient of friction of 0.50.
b. Special Covers: Recess in face of cover designed to accept finish material in paved areas.

2. Cover Legend: Cast in. Selected to suit system.

a. Legend: "ELECTRIC-LV" for duct systems with power wires and cables for systems operating at 600 V and less.
b. Legend: "ELECTRIC-HV" for duct systems with medium-voltage cables.
c. Legend: "SIGNAL" for communications, data, and telephone duct systems.

3. Manhole Chimney Components: Precast concrete rings with dimensions matched to those of roof opening.

a. Mortar for Chimney Ring and Frame and Cover Joints: Comply with ASTM C 270, Type M, except for quantities less than 2.0 cu. ft. (60 L) where packaged mix complying with ASTM C 387, Type M, may be used.

C. Pulling Eyes in Concrete Walls: Eyebolt with reinforcing-bar fastening insert, 2-inch- (50-mm-) diameter eye, and 1-by-4-inch (25-by-100-mm) bolt.

1. Working Load Embedded in 6-Inch (150-mm), 4000-psi (27.6-MPa) Concrete: 13,000-lbf (58-kN) minimum tension.

D. Pulling Eyes in Nonconcrete Walls: Eyebolt with reinforced fastening, 1-1/4-inch- (32-mm-) diameter eye, rated 2500-lbf (11-kN) minimum tension.

E. Pulling-In and Lifting Irons in Concrete Floors: 7/8-inch- (22-mm-) diameter, hot-dip galvanized, bent steel rod; stress relieved after forming; and fastened to reinforcing rod. Exposed triangular opening.

1. Ultimate Yield Strength: 40,000-lbf (180-kN) shear and 60,000-lbf (270-kN) tension.

F. Bolting Inserts for Concrete Utility Structure Cable Racks and Other Attachments: Flared, threaded inserts of noncorrosive, chemical-resistant, nonconductive thermoplastic material; 1/2-inch (13-mm) ID by 2-3/4 inches (69 mm) deep, flared to 1-1/4 inches (32 mm) minimum at base.

1. Tested Ultimate Pullout Strength: 12,000 lbf (53 kN) minimum.

G. Expansion Anchors for Installation after Concrete Is Cast: Zinc-plated, carbon-steel-wedge type with stainless-steel expander clip with 1/2-inch (13-mm) bolt, 5300-lbf (24-kN) rated pullout strength, and minimum 6800-lbf (30-kN) rated shear strength.

H. Cable Rack Assembly: Steel, hot-dip galvanized, except insulators.

1. Stanchions: T-section or channel; 2-1/4-inch (57-mm) nominal size; punched with 14 holes on 1-1/2-inch (38-mm) centers for cable-arm attachment.

2. Arms: 1-1/2 inches (38 mm) wide, lengths ranging from 3 inches (75 mm) with 450-lb (204-kg) minimum capacity to 18 inches (460 mm) with 250-lb (114-kg) minimum capacity. Arms shall have slots along full length for cable ties and be arranged for secure mounting in horizontal position at any vertical location on stanchions.
3. Insulators: High-glaze, wet-process porcelain arranged for mounting on cable arms.

I. Duct-Sealing Compound: Nonhardening, safe for contact with human skin, not deleterious to cable insulation, and workable at temperatures as low as 35 deg F (2 deg C). Capable of withstanding temperature of 300 deg F (150 deg C) without slump and adhering to clean surfaces of plastic ducts, metallic conduits, conduit coatings, concrete, masonry, lead, cable sheaths, cable jackets, insulation materials, and common metals. Capable of withstanding maximum hydrostatic pressures at the installation location with the ground-water level at grade.

PART 3 EXECUTION

3.1 UNDERGROUND DUCT APPLICATION

System / Service	Voltage	Location	Duct Type & Standard	Encasement / Notes
Normal Power – Services & Feeders	≤600 V	Outside building footprint	RNC, NEMA EB-20 PVC	Concrete-encased, with warning tape.

3.2 EARTHWORK

A. Excavation and Backfill: Comply with Division 31 Section 31 00 01 "Earth Moving", but do not use heavy- duty, hydraulic-operated, compaction equipment.

B. Restore surface features at areas disturbed by excavation and reestablish original grades, unless otherwise indicated. Replace removed sod immediately after backfilling is completed.

C. Restore areas disturbed by trenching, storing of dirt, cable laying, and other work. Restore vegetation and include necessary topsoiling, fertilizing, liming, seeding, sodding, sprigging, and mulching.

D. Prepare excavation, base material installation, and compaction necessary for the specific ductbank arrangement.

E. Verify that excavation, base material installation, and compaction is completed.

3.3 DUCT INSTALLATION

A. Slope: Pitch ducts a minimum slope of 1:300 down toward manholes and handholes and away from buildings and equipment. Slope ducts from a high point in runs between two manholes to drain in both directions.

B. Curves and Bends:

1. Use 5-degree angle couplings for small changes in direction. Use manufactured long sweep bends with a minimum radius of 48 inches (1220 mm), both horizontally and vertically, at other locations, unless otherwise indicated.

C. Install conduits to locate top of ductbank at depths as indicated or as required to coordinate with other portions of the Work.

D. Apply corrosion resistance tape and primer to direct-buried or concrete-encased RSC.

E. Joints: Use solvent-cemented joints in ducts and fittings and make watertight according to manufacturer's written instructions. Stagger couplings so those of adjacent ducts do not lie in same plane.

F. Duct Entrances to Manholes and Concrete and Polymer Concrete Handholes: Use end bells, spaced approximately 10 inches (250 mm) o.c. for 5-inch (125-mm) ducts, and vary proportionately for other duct sizes.

1. Begin change from regular spacing to end-bell spacing 10 feet (3 m) from the end bell without reducing duct line slope and without forming a trap in the line.
2. Direct-Buried Duct Banks: Install an expansion and deflection fitting in each conduit in the area of disturbed earth adjacent to manhole or handhole.
3. Grout end bells into structure walls from both sides to provide watertight entrances.

G. Stub-Ups: Use manufactured rigid steel conduit elbows and rigid steel conduit extensions for stub-ups at poles, equipment, and at building entrances through the floor. Install insulated bushings on terminations.

1. Extend conduit extensions installed in floors a minimum of 4 inches (102 mm) above finished floor level.
2. Extend conduit extensions installed in equipment bases a minimum of 4 inches (102 mm) above finished base level.
3. Stub-Ups to Outdoor Equipment: For equipment mounted on outdoor concrete bases, Install insulated grounding bushings on terminations at equipment.

H. Sealing: Provide temporary caps to protect installed conduit against entrance of dirt and moisture prior to cable installation. Provide temporary closure at terminations of ducts that have cables pulled. Seal spare ducts at terminations. Use sealing compound and plugs to withstand at least 15-psig (1.03-MPa) hydrostatic pressure.

I. Pulling Cord: Install 100-lbf- (445-N-) test nylon cord in ducts, including spares.

J. Concrete-Encased Duct(s) and Duct Banks:

1. Support duct(s) on duct separators.

2. Separator Installation: Space separators close enough to prevent sagging and deforming of ducts, with not less than 5 spacers per 20 feet (6 m) of duct. Secure separators to earth and to ducts to prevent floating during concreting. Stagger separators approximately 6 inches (150 mm) between tiers. Tie entire assembly together using fabric straps; do not use tie wires or reinforcing steel that may form conductive or magnetic loops around ducts or duct groups.
3. Minimum Space between Ducts: 3 inches (75 mm) between ducts and exterior envelope wall, 2 inches (50 mm) between ducts for like services, and 4 inches (100 mm) between power and signal ducts.
4. Depth: Install top of duct bank at least 30 inches below finished grade in areas not subject to deliberate traffic, and at least 36 inches below finished grade in deliberate traffic paths for vehicles, unless otherwise indicated.
5. Stub-ups: Provide SCH 80 PVC conduit stub-ups.
6. Concrete Color: Dye added to concrete during batching or powder dye applied to top prior to curing.
    a. ELECTRIC: Red for duct systems with power wires and cables.
    b. SIGNAL: Orange for communications, data, and telephone duct systems.

7. Concreting Sequence: Pour each run of envelope between manholes or other terminations in one continuous operation.
    a. Start at one end and finish at the other, allowing for expansion and contraction of ducts as their temperature changes during and after the pour. Use expansion fittings installed according to manufacturer's written recommendations, or use other specific measures to prevent expansion-contraction damage.
    b. If more than one pour is necessary, terminate each pour in a vertical plane and install 3/4-inch (19-mm) reinforcing rod dowels extending 18 inches (450 mm) into concrete on both sides of joint near corners of envelope.
    c. For Cast-In-Place manholes: Connect to manhole wall using dowels.

8. Pouring Concrete: Spade concrete carefully during pours to prevent voids under and between conduits and at exterior surface of envelope. Do not allow a heavy mass of concrete to fall directly onto ducts. Use a plank to direct concrete down sides of bank assembly to trench bottom. Allow concrete to flow to center of bank and rise up in middle, uniformly filling all open spaces. Do not use power-driven agitating equipment unless specifically designed for duct-bank application.
9. Reinforcement: Reinforce concrete-encased duct banks where they cross disturbed earth and where indicated. Arrange reinforcing rods and ties without forming conductive or magnetic loops around ducts or duct groups.
10. Forms: Use walls of trench to form side walls of duct bank where soil is self-supporting and concrete envelope can be poured without soil inclusions; otherwise, use forms.
11. Label top of encased duct bank with stenciled lettering 2-inch- (50-mm-) high letters at not less than 10-foot intervals, after curing. Label selected to suit system or as otherwise required.

    a. Legend: "ELECTRIC-HV" for duct systems with power wires and cables operating over 600 V.

K. Direct-Buried Duct(s) and Duct Banks:

1. Support duct(s) on duct separators coordinated with duct size, duct spacing, and outdoor temperature.
2. Space separators close enough to prevent sagging and deforming of ducts, with not less than 5 spacers per 20 feet (6 m) of duct. Secure separators to earth and to ducts to prevent displacement during backfill and yet permit linear duct movement due to expansion and contraction as temperature changes. Stagger spacers approximately 6 inches (150 mm) between tiers.
3. Excavate trench bottom to provide firm and uniform support for duct bank. Prepare trench bottoms as specified in Division 31 Section 31 00 01 "Earth Moving" for pipes less than 6 inches (150 mm) in nominal diameter.
4. After installing first tier of ducts, backfill and compact. Start at tie-in point and work toward end of duct run, leaving ducts at end of run free to move with expansion and contraction as temperature changes during this process. Repeat procedure after placing each tier. After placing last tier, hand-place backfill to 4 inches (100 mm) over ducts and hand tamp. Firmly tamp backfill around ducts to provide maximum supporting strength. Use hand tamper only. After placing controlled backfill over final tier, make final duct connections at end of run and complete backfilling with normal compaction as specified in Division 31 Section "Earth Moving".
5. Install ducts with a minimum of 3 inches (75 mm) between ducts for like services and 6 inches (150 mm) between power and signal ducts.
6. Depth: Install top of duct bank at least 36 inches (900 mm) below finished grade, unless otherwise indicated.
7. Set elevation of bottom of duct bank below the frost line.
8. Install manufactured PVC SCH 80 conduit elbows for stub-ups at poles and equipment and at building entrances through the floor.

L. Warning Tape: Bury Warning Tape Caps approximately 12 inches (300 mm) above ducts and duct banks, where indicated.

1. Align tape parallel to and within 3 inches (75 mm) of the centerline of duct bank.
2. Provide an additional warning tape for each 12-inch (300-mm) increment of duct-bank width over a nominal 18 inches (450 mm). Space additional tapes 12 inches (300 mm) apart, horizontally.

3.4 INSTALLATION OF CONCRETE HANDHOLES, AND BOXES

A. Precast Concrete Handhole and Manhole Installation:

1. Comply with ASTM C 891, unless otherwise indicated.
2. Install units level and plumb and with orientation and depth coordinated with connecting ducts to minimize bends and deflections required for proper entrances.
3. Unless otherwise indicated, support units on a minimum 6-inch (150-mm) level bed of crushed stone or gravel, graded from 1-inch (25-mm) sieve to No. 4 (4.75-mm) sieve and compacted to same density as adjacent undisturbed earth.

B. Elevations:

1. Manhole Roof: Install with rooftop at least 15 inches (380 mm) below finished grade or as required to prevent floating of manhole.
2. Manhole Frame: In paved areas and trafficways, set frames flush with finished grade. Set other manhole frames 1 inch (25 mm) above finished grade.
3. Install handholes with bottom below the frost line.
4. Handhole Covers: In paved areas and trafficways, set surface flush with finished grade. Set covers of other handholes 1 inch (25 mm) above finished grade.
5. Where indicated, cast handhole cover frame integrally with handhole structure.

C. Dampproofing: Apply dampproofing to exterior surfaces of manholes and handholes after concrete has cured at least three days. After ducts have been connected and grouted, and before backfilling, dampproof joints and connections and touch up abrasions and scars. Dampproof exterior of manhole chimneys after mortar has cured at least three days.

D. Hardware: Install removable hardware, including pulling eyes, cable stanchions, and cable arms, and insulators, as required for installation and support of cables and conductors and as indicated.

E. Field-Installed Bolting Anchors in Manholes and Concrete Handholes: Do not drill deeper than 3-7/8 inches (98 mm) for manholes and 2 inches (50 mm) for handholes, for anchor bolts installed in the field. Use a minimum of two anchors for each cable stanchion.

F. Warning Sign: Install "Confined Space Hazard" warning sign on the inside surface of each manhole cover.

3.5 INSTALLATION OF HANDHOLES AND BOXES OTHER THAN PRECAST CONCRETE

A. Install handholes and boxes level and plumb and with orientation and depth coordinated with connecting ducts to minimize bends and deflections required for proper entrances. Use box extension if required to match depths of ducts, and seal joint between box and extension as recommended by the manufacturer.

B. Unless otherwise indicated, support units on a minimum 4-inch (100-mm) level bed of crushed stone or gravel, graded from 1/2-inch (12.7-mm) sieve to No. 4 (4.75-mm) sieve and compacted to same density as adjacent undisturbed earth.

C. Elevation: In paved areas and trafficways, set so cover surface will be flush with finished grade. Set covers of other handholes 1 inch (25 mm) above finished grade.

D. Install handholes and boxes with bottom below the frost line.

E. Install removable hardware, including pulling eyes, cable stanchions, cable arms, and insulators, as required for installation and support of cables and conductors and as indicated. Select arm lengths to be long enough to provide spare space for future cables, but short enough to preserve adequate working clearances in the enclosure.

F. Field-cut openings for ducts and conduits according to enclosure manufacturer's written instructions. Cut wall of enclosure with a tool designed for material to be cut. Size holes for terminating fittings to be used, and seal around penetrations after fittings are installed.

G. For enclosures installed in asphalt paving and other non-concrete surfaces and subject to occasional, nondeliberate, heavy-vehicle loading, form and pour a concrete ring encircling, and in contact with, enclosure and with top surface screeded to top of box cover frame. Bottom of ring shall rest on compacted earth.

1. Concrete: 3000 psi (20 kPa), 28-day strength, complying with Division 03 Section 03 30 00"Cast- in-Place Concrete," with a troweled finish.
2. Dimensions: 10 inches wide by 12 inches deep (250 mm wide by 300 mm deep).

3.6 GROUNDING

A. Ground underground ducts and utility structures according to Division 26 Section "Grounding and Bonding for Electrical Systems."

3.7 SLEEVE AND SLEEVE SEAL INSTALLATION FOR ELECTRICAL PENETRATIONS

A. Apply Sleeve and Sleeve Seal where raceways, cables, wireways, cable trays, or busways penetrate concrete slabs, concrete or masonry walls, exterior walls, sub-grade walls or fire- rated floor and wall assemblies. Sleeve and Sleeve Seal materials and installation requirements are specified in Division 26 Section "Common Work Results for Electrical."

3.8 FIELD QUALITY CONTROL

A. Perform the following tests and inspections and prepare test reports:

1. Pull aluminum or wood test mandrel through duct to prove joint integrity and test for out- of-round duct. Provide mandrel equal to 80 percent fill of duct. If obstructions are indicated, remove obstructions and retest.
2. Test manhole and handhole grounding to ensure electrical continuity of grounding and bonding connections. Measure and report ground resistance as specified in Division 26 Section "Grounding and Bonding for Electrical Systems."

B. Correct deficiencies and retest as specified above to demonstrate compliance.

3.9 CLEANING

A. On completion of installation but before any equipment or cable is installed, inspect interior and exterior surfaces and perform the following:

1. Clean ducts prior to cleaning manhole or pull box.
2. Pull leather-washer-type duct cleaner, with graduated washer sizes, through full length of ducts. Follow with rubber duct swab for final cleaning and to assist in spreading lubricant throughout ducts.
3. Remove all dirt and debris and pump out the manhole or pull box so that it is free of standing water. Manholes and pull boxes shall be dry prior to equipment or cable is installed.
4. Clean internal surfaces of manholes, including sump and remove foreign

material.

5. Repair of damages resulting from construction after initial installation.
6. Install ductile pipe plugs on each end of the raceways to prevent future debris from entering the raceways in the ducts.

END OF SECTION 260543

SECTION 260553 - IDENTIFICATION FOR ELECTRICAL SYSTEMS

PART 1 - GENERAL

1.1 SECTION INCLUDES

A. Furnish and install items for identification of electrical products installed under Division 26.

1.2 SUBMITTALS

A. Product Data: For each electrical identification product indicated.

B. Identification Schedule: An index of nomenclature of electrical equipment and system components used in identification signs and labels.

C. Samples: For each type of label and sign to illustrate size, colors, lettering style, mounting provisions, and graphic features of identification products.

1.3 COORDINATION

A. Coordinate identification names, abbreviations, colors, and other features with requirements in the Contract Documents, Shop Drawings, manufacturer's wiring diagrams, and the Operation and Maintenance Manual, and with those required by codes and standards. Use consistent designations throughout Project.

B. Coordinate installation of identifying devices with completion of covering and painting of surfaces where devices are to be applied.

C. Coordinate installation of identifying devices with location of access panels and doors.

D. Install identifying devices before installing acoustical ceilings and similar concealment.

PART 2 - PRODUCTS

2.1 RACEWAY AND METAL-CLAD CABLE IDENTIRICATION MATERIALS

A. Comply with ANSI A13.1 for minimum size of letters for legend and for minimum length of color field for each raceway and cable size.

B. Color for Printed Legend:

1. Power Circuits: Black letters on an orange field.
2. Legend: Indicate system or service and voltage, if applicable.

    a. Typical:

1) Type: Example – AC 60 Hertz
2) Load: Example – Lighting and Power
3) Voltage: Example – 120VA / 1 Phase

b. As Required

1) If more than one type of power is available in a conduit, then it shall be marked with the title "Electrical" on orange background.
2) If used for control of HVAC conduit shall be marked with the title "Control" on an orange background

c. Conduit that contains communication systems shall have the exact contend and title on blue background.

C. Self-Adhesive Vinyl Labels: Preprinted, flexible label laminated with a clear, weather- and chemical-resistant coating and matching wraparound adhesive tape for securing ends of legend label.

D. Self-Adhesive Vinyl Tape: Colored, heavy duty, waterproof, fade resistant; 2 inches (50 mm)wide; compounded for outdoor use.

2.2 CONDUCTOR IDENTIFICATION MATERIALS

A. Color-Coding Conductor Tape: Colored, self-adhesive vinyl tape not less than 3 mils (0.08 mm)thick by 1 to 2 inches (25 to 50 mm) wide.

B. Marker Tapes: Vinyl or vinyl-cloth, self-adhesive wraparound type, with circuit identification legend machine printed by thermal transfer or equivalent process.

2.3 UNDERGROUND-LINE WARNING TAPE

A. Description: Permanent, bright-colored, continuous-printed, polyethylene tape.

1. Not less than 6 inches (150 mm) wide by 4 mils (0.102 mm) thick.
2. Compounded for permanent direct-burial service.
3. Embedded continuous metallic strip or core.
4. Printed legend shall indicate type of underground line.

2.4 WARNING LABELS AND SIGNS

A. Comply with NFPA 70 and 29 CFR 1910.145

B. Self-Adhesive Warning Labels: Factory printed, multicolor, pressure-sensitive adhesive labels, configured for display on front cover, door, or other access to equipment, unless otherwise indicated.

C. Baked-Enamel Warning Signs: Preprinted aluminum signs, punched or drilled for fasteners, with colors, legend, and size required for application. 1/4-inch grommets in corners for mounting. Nominal size, 7 by 10 inches.

D. Warning label and sign shall include, but are not limited to, the following legends:

1. Warning label and sign shall include, but are not limited to, the following legends:
2. Multiple Power Source Warning: "DANGER - ELECTRICAL SHOCK HAZARD - EQUIPMENTHAS MULTIPLE POWER SOURCES."
3. Workspace Clearance Warning: "WARNING - OSHA REGULATION - AREA IN FRONT OF ELECTRICAL EQUIPMENT MUST BE KEPT CLEAR FOR ## INCHES." Verify work space required for specific project conditions with NFPA 70 and replace "##" in previous sentence with appropriate distance.
4. Arc Flash Warning and Instructions: "WARNING – ARC FLASH AND SHOCK HAZARD. WEAR APPROPRIATE PPE. Determine appropriate protective clothing and personal protective equipment (PPE) for the task from NFPA 70E.

2.5 INSTRUCTION SIGNS

A. Engraved, laminated acrylic or melamine plastic, minimum 1/16 inch thick for signs up to 20 sq. in. and 1/8 inch thick for larger sizes.

B. Engraved legend with black letters on white face.

C. Punched or drilled for mechanical fasteners.

D. Framed with mitered acrylic molding and arranged for attachment at applicable equipment.

2.6 ONE-LINE DIAGRM NAMEPLATE

A. Preprinted engraved, laminated acrylic or melamine plastics sign. Nominal size, 12 by 12 inches (305 by 305 mm) by 1/8 inch (3.2 mm) thick. Engraved legend with black letters on white face. Image on sign depicting equipment components in single-line diagram format, using symbols and letter designations consistent with final one-line bus diagram. Produce a concise visual presentation of principal equipment components and connections.

2.7 EQUIPMENT IDENTRICIATION LABELS

A. Engraved, Laminated Acrylic or Melamine Label: Punched or drilled for screw mounting. White letters on a dark-gray background. Minimum letter height shall be 3/8 inch. Lettering and Background colors as indicated below:

1. Power Circuits:

    a. Normal: White lettering on Black background.
    b. Life Safety Branch: White Lettering on Red background.

2. Fire Alarm System: Black lettering on Red background.
3. Fire-Suppression Supervisory and Control System: Yellow lettering on Red background.
4. Combined Fire Alarm and Security System: Blue lettering on Red background.

5. Security System: Blue lettering on Yellow background.
6. Mechanical and Electrical Supervisory System: Green lettering on White background.
7. Telecommunication System: Blue lettering on White background.
8. Control Wiring: Green lettering on White background.
9. Public Address / Intercom: White lettering on Black background
10. CATV / MATV: White lettering on Black background

2.8 MISCELLANEOUS IDENTIFICATION PRODUCTS

A. Cable Ties : Fungus-inert, self-extinguishing, 1-piece, self-locking, Type 6/6 nylon cable ties.

1. Minimum Width: 3/16 inch (5 mm)
2. Tensile Strength: 50 lb (22.6 kg), minimum
3. Temperature Range: Minus 40 to plus 185 deg F (Minus 40 to plus 85 deg C).
4. Color: Black, except where used for color-coding.

B. Paint: Paint materials and application requirements are specified in Division 09 painting Sections.

C. Fasteners for Labels and Signs: Self-tapping, stainless-steel screws or stainless-steel machine screws with nuts and flat and lock washers.

PART 3 - EXECUTION

3.1 APPLICATION

A. Accessible Raceways More Than 600 V: Identify with "DANGER-HIGH VOLTAGE" in black letters at least 2 inches (50 mm) high, with self-adhesive vinyl labels. Repeat legend at 10-foot(3-m) maximum intervals.

B. Branch-Circuit Conductor Identification: Where there are conductors for more than three branch circuits in same junction or pull box, use color-coding conductor tape. Identify each ungrounded conductor according to source and circuit number.

C. Conductors to Be Extended in the Future: Attach write-on tags to conductors and list source and circuit number.

D. Auxiliary Electrical Systems Conductor Identification: Identify field-installed alarm, control, signal, sound, intercommunications, voice, and data connections.

1. Identify conductors, cables, and terminals in enclosures and at junctions, terminals, and pull points. Identify by system and circuit designation.
2. Use system of marker tape designations that is uniform and consistent with system used by manufacturer for factory-installed connections.
3. Coordinate identification with Project Drawings, manufacturer's wiring diagrams, and Operation and Maintenance Manual.

E. Locations of Underground Lines: Identify with underground-line warning tape for power, lighting, communication, and control wiring and optical fiber cable. Install underground-

line warning tape for both direct-buried cables and cables in raceway.

F. Warning Labels for Indoor Cabinets, Boxes, and Enclosures for Power and Lighting: Comply with 29 CFR 1910.145 and apply self-adhesive warning labels. Identify system voltage with black letters on an orange background. Apply to exterior of door, cover, or other access.

1. Equipment with Multiple Power or Control Sources: Apply to door or cover of equipment including, but not limited to, the following:

    a. Power transfer switches.

2. Equipment Requiring Workspace Clearance According to NFPA 70: Unless otherwise indicated, apply to door or cover of equipment but not on flush panelboards and similar equipment in finished spaces.
3. Arc Flash Warning Labels: Apply label to door or cover at all access point of equipment including, but not limited to, the following:

    a. Disconnect switches
    b. Electrical switchgear and switchboards
    c. Enclosed circuit breakers
    d. Motor starters
    e. Panelboards
    f. Power transfer equipment (ATS/MTS)
    g. Transformers

G. Junction Boxes and Pull Boxes: Identify voltage, source, and circuit number(s) on cover of pull and junction boxes with hand-written legible block lettering using black permanent marking pen.

H. Instruction Signs:

1. Operating Instructions: Install instruction signs to facilitate proper operation and maintenance of electrical systems and items to which they connect. Install instruction signs with approved legend where instructions are needed for system or equipment operation.
2. Emergency Operating Instructions: Install instruction signs with minimum 3/8-inch- (10-mm-) high letters for emergency instructions at equipment used for power transfer load shedding, Kirk Key Controlled Breakers.

I. Equipment Identification Labels: On each unit of equipment, install unique designation label that is consistent with wiring diagrams, schedules, and Operation and Maintenance Manual. This applies to existing equipment that is modified during this project. Apply labels to disconnect switches and protection equipment, central or master units, control panels, control stations, terminal cabinets, and racks of each system. Systems include power, lighting, control, communication, signal, monitoring, and alarm systems unless equipment is provided with its own identification.

1. Labeling Instructions:

    a. Indoor Equipment: Engraved, laminated acrylic or melamine label. Unless otherwise indicated, provide a single line of text with 1/2-inch- high letters on 1-1/2-inch- high label; where 2 lines of text are required, use labels 2 inches high.

b. Outdoor Equipment: Engraved, laminated acrylic or melamine label.
c. Elevated Components: Increase sizes of labels and letters to those appropriate for viewing from the floor.

2. Equipment to Be Labeled Shall Include But Not Be Limited To:

a. Panelboards, electrical cabinets, and enclosures.
b. Access doors and panels for concealed electrical items.
c. Electrical switchgear and switchboards.
d. Transformers.
e. Emergency system boxes and enclosures.
f. Disconnect switches.
g. Enclosed circuit breakers.
h. Power transfer equipment. (ATS/MTS)
i. Contactors.
j. Motor Starters
k. Motor-control centers
l. Fire-alarm control panel and annunciators
m. Power-generating units.
n. All junction boxes. Label to include circuit numbers (panel and number).
o. All receptacle device plates shall be etched with circuit numbers. (panel and number).
p. All lighting switch plates shall have circuit numbers on the back of the plate. (panel and number).

Examples:

NORMAL 'HA' 480Y/277V FED FROM 'MDP'	EMERGENCY SYSTEM 'ATS-LS' 480Y/277V FED FROM 'MDP' NORMAL FED FROM 'EMSB' EMERGENCY FEEDS 'LS-HA'	NORMAL 'T-LA' 75KVA, 480V to 208Y/120V FED FROM 'HA' FEEDS 'LA'

3. Provide for each feeder overcurrent protective device in each switchgear, switchboard, distribution panelboard, motor control center, and any other similar equipment furnished under this Division, identification as to the specific load that it serves.

J. Existing Panel Schedules: Any existing panel where a circuit was removed, relocated or added, the contractor shall provide a new panel schedule with updated information.

3.2 INSTALLATION

A. Verify identity of each item before installing identification products.

B. Location: Install identification materials and devices at locations for most convenient viewing without interference with operation and maintenance of equipment.

C. Apply identification devices to surfaces that require finish after completing finish work.

D. Self-Adhesive Identification Products: Clean surfaces before application, using materials

and methods recommended by manufacturer of identification device.

E. Attach non-adhesive signs and plastic labels with screws and auxiliary hardware appropriate to the location and substrate.

F. System Identification Color Banding for Raceways and Cables: Each color band shall completely encircle cable or conduit. Place adjacent bands of two-color markings in contact, side by side. Locate bands at changes in direction, at penetrations of walls and floors, at 50-foot (15-m) maximum intervals in straight runs, and at 25-foot (7.6-m) maximum intervals in congested areas.

G. Color-Coding for Identification, 600 V and Less: Use the colors listed below for ungrounded service, feeder, and branch-circuit conductors.

1. Color shall be factory applied or for sizes larger than No. 1 AWG, if authorities having jurisdiction permit, field applied.
2. Colors for Grounding Conductors:

    a. Equipment Grounding Conductor: Green.
    b. Isolated Equipment Grounding Conductor: Green with Yellow Stripe.

3. Colors for 208/120-V Wye Systems:

    a. Phase A: Black.
    b. Phase B: Red.
    c. Phase C: Blue.
    d. Grounded Conductor (Neutral): White

4. Colors for 480/277-V Wye Systems:

    a. Phase A: Brown.
    b. Phase B: Purple.
    c. Phase C: Yellow.
    d. Grounded Conductor (Neutral): Gray

5. Field-Applied, Color-Coding Conductor Tape: Apply in half-lapped turns for a minimum distance of 6 inches (150 mm) from terminal points and in boxes where splices or taps are made. Apply last two turns of tape with no tension to prevent possible unwinding. Locate bands to avoid obscuring factory cable markings.

H. Aluminum Wraparound Marker Labels and Metal Tags: Secure tight to surface of conductor or cable at a location with high visibility and accessibility.

I. Underground-Line Warning Tape: During backfilling of trenches install continuous underground-line warning tape directly above line at 6 to 8 inches (150 to 200 mm) below finished grade. Use multiple tapes where width of multiple lines installed in a common trench or concrete envelope exceeds 16 inches (400 mm) overall.

J. Painted Identification: Prepare surface and apply paint according to Division 09 painting Sections.

END OF SECTION 260553

SECTION 260572 - OVERCURRENT PROTECTIVE DEVICE SHORT-CIRCUIT STUDY

PART 1 - GENERAL

1.1 RELATED DOCUMENTS

A. Drawings and general provisions of the Contract, including General and Supplementary Conditions and Division 01 Specification Sections, apply to this Section.

1.2 SUMMARY

A. Section includes a computer-based, fault-current study to determine the minimum interrupting capacity of circuit protective devices.

1.3 DEFINITIONS

A. Existing to Remain: Existing items of construction that are not to be removed and that are not otherwise indicated to be removed, removed and salvaged, or removed and reinstalled.

B. One-Line Diagram: A diagram which shows, by means of single lines and graphic symbols, the course of an electric circuit or system of circuits and the component devices or parts used therein.

C. Protective Device: A device that senses when an abnormal current flow exists and then removes the affected portion from the system.

D. SCCR: Short-circuit current rating.

E. Service: The conductors and equipment for delivering electric energy from the serving utility to the wiring system of the premises served.

1.4 ACTION SUBMITTALS

A. Product Data: For computer software program to be used for studies.

B. Other Action Submittals: Submit the following after the approval of system protective devices submittals. Submittals shall be in digital form.

1. Short-circuit study input data, including completed computer program input data sheets.
2. Short-circuit study and equipment evaluation report; signed, dated, and sealed by a qualified professional engineer.

    a. Submit study report for action prior to receiving final approval of the distribution equipment submittals. If formal completion of studies will cause

delay in equipment manufacturing, obtain approval from Architect for preliminary submittal of sufficient study data to ensure that the selection of devices and associated characteristics is satisfactory.

b. Revised single-line diagram, reflecting field investigation results and results of short-circuit study.

1.5 INFORMATIONAL SUBMITTALS

A. Qualification Data: For Short-Circuit Study Specialist and Field Adjusting Agency.

B. Product Certificates: For short-circuit study software, certifying compliance with IEEE 399.

1.6 QUALITY ASSURANCE

A. Studies shall use computer programs that are distributed nationally and are in wide use. Software algorithms shall comply with requirements of standards and guides specified in this Section. Manual calculations are unacceptable.

B. Short-Circuit Study Software Developer Qualifications: An entity that owns and markets computer software used for studies, having performed successful studies of similar magnitude on electrical distribution systems using similar devices.

1. The computer program shall be developed under the charge of a licensed professional engineer who holds IEEE Computer Society's Certified Software Development Professional certification.

C. Short-Circuit Study Specialist Qualifications: Professional engineer in charge of performing the study and documenting recommendations, licensed in the state where Project is located. All elements of the study shall be performed under the direct supervision and control of this professional engineer.

D. Field Adjusting Agency Qualifications: An independent agency, with the experience and capability to adjust overcurrent devices and to conduct the testing indicated, that is a member company of the International Electrical Testing Association or is a nationally recognized testing laboratory (NRTL) as defined by OSHA in 29 CFR 1910.7, and that is acceptable to authorities having jurisdiction.

PART 2 - PRODUCTS

2.1 COMPUTER SOFTWARE

A. Manufacturers: Subject to compliance with requirements, provide products by the following:

1. SKM Systems Analysis, Inc.
2. ETAP

B. Comply with IEEE 399 and IEEE 551.

C. Analytical features of fault-current-study computer software program shall have the capability to calculate "mandatory," "very desirable," and "desirable" features as listed in IEEE 399.

D. Computer software program shall be capable of plotting and diagramming time-current-characteristic curves as part of its output.

2.2 SHORT-CIRCUIT STUDY REPORT CONTENTS

A. Executive summary.

B. Study descriptions, purpose, basis, and scope. Include case descriptions, definition of terms, and guide for interpretation of the computer printout.

C. One-line diagram, showing the following:

1. Protective device designations and ampere ratings.
2. Cable size and lengths.
3. Transformer kilovolt ampere (kVA) and voltage ratings.
4. Motor and generator designations and kVA ratings.
5. Switchgear, switchboard, motor-control center, and panelboard designations.

D. Comments and recommendations for system improvements, where needed.

E. Protective Device Evaluation:

1. Evaluate equipment and protective devices and compare to short-circuit ratings.
2. Tabulations of circuit breaker, fuse, and other protective device ratings versus calculated short-circuit duties.
3. For 600-V overcurrent protective devices, ensure that interrupting ratings are equal to or higher than calculated 1/2-cycle symmetrical fault current.
4. For devices and equipment rated for asymmetrical fault current, apply multiplication factors listed in the standards to 1/2-cycle symmetrical fault current.
5. Verify adequacy of phase conductors at maximum three-phase bolted fault currents; verify adequacy of equipment grounding conductors and grounding electrode conductors at maximum ground-fault currents. Ensure that short-circuit withstand ratings are equal to or higher than calculated 1/2-cycle symmetrical fault current.

F. Short-Circuit Study Input Data: As described in "Power System Data" Article in the Evaluations.

G. Short-Circuit Study Output:

1. Low-Voltage Fault Report: Three-phase and unbalanced fault calculations, showing the following for each overcurrent device location:

a. Voltage.
b. Calculated fault-current magnitude and angle.
c. Fault-point X/R ratio.
d. Equivalent impedance.

2. Momentary Duty Report: Three-phase and unbalanced fault calculations, showing the following for each overcurrent device location:

    a. Voltage.
    b. Calculated symmetrical fault-current magnitude and angle.
    c. Fault-point X/R ratio.
    d. Calculated asymmetrical fault currents:

        1) Based on fault-point X/R ratio.
        2) Based on calculated symmetrical value multiplied by 1.6.
        3) Based on calculated symmetrical value multiplied by 2.7.

3. Interrupting Duty Report: Three-phase and unbalanced fault calculations, showing the following for each overcurrent device location:

    a. Voltage.
    b. Calculated symmetrical fault-current magnitude and angle.
    c. Fault-point X/R ratio.
    d. No AC Decrement (NACD) ratio.
    e. Equivalent impedance.
    f. Multiplying factors for 2-, 3-, 5-, and 8-cycle circuit breakers rated on a symmetrical basis.
    g. Multiplying factors for 2-, 3-, 5-, and 8-cycle circuit breakers rated on a total basis.

PART 3 - EXECUTION

3.1 EXAMINATION

A. Obtain all data necessary for the conduct of the study.

1. Verify completeness of data supplied on the one-line diagram. Call any discrepancies to the attention of Engineer.
2. For equipment provided that is Work of this Project, use characteristics submitted under the provisions of action submittals and information submittals for this Project.
3. For relocated equipment and that which is existing to remain, obtain required electrical distribution system data by field investigation and surveys, conducted by qualified technicians and engineers. The qualifications of technicians and engineers shall be qualified as defined by NFPA 70E.
4. Obtain all arc flash information from the local utility in a timely manner. No extension of the contract time shall be permitted due to coordination with the local utility.

B. Gather and tabulate the following input data to support the short-circuit study. Comply with recommendations in IEEE 551 as to the amount of detail that is required to be acquired in the field. Field data gathering shall be under the direct supervision and control of the engineer in charge of performing the study, and shall be by the engineer or its representative who holds NETA ETT Level III certification or NICET Electrical Power Testing Level III certification.

1. Product Data for Project's overcurrent protective devices involved in overcurrent protective device coordination studies. Use equipment designation tags that are consistent with electrical distribution system diagrams, overcurrent protective device submittals, input and output data, and recommended device settings.
2. Obtain electrical power utility impedance at the service.
3. Power sources and ties.
4. For transformers, include kVA, primary and secondary voltages, connection type, impedance, X/R ratio, taps measured in percent, and phase shift.
5. For reactors, provide manufacturer and model designation, voltage rating, and impedance.
6. For circuit breakers and fuses, provide manufacturer and model designation. List type of breaker, type of trip, SCCR, current rating, and breaker settings.
7. Generator short-circuit current contribution data, including short-circuit reactance, rated kVA, rated voltage, and X/R ratio.
8. Busway manufacturer and model designation, current rating, impedance, lengths, and conductor material.
9. Motor horsepower and NEMA MG 1 code letter designation.
10. Cable sizes, lengths, number, conductor material and conduit material (magnetic or nonmagnetic).

3.2 SHORT-CIRCUIT STUDY

A. Perform study following the general study procedures contained in IEEE 399.

B. Calculate short-circuit currents according to IEEE 551.

C. Base study on the device characteristics supplied by device manufacturer.

D. The extent of the electrical power system to be studied is indicated on Drawings.

E. Begin short-circuit current analysis at the service, extending down to the system overcurrent protective devices as follows:

1. To normal system low-voltage load buses where fault current is 10 kA or less.
2. Exclude equipment rated 240-V ac or less when supplied by a single transformer rated less than 125 kVA.

F. Study electrical distribution system from normal and alternate power sources throughout electrical distribution system for Project. Study all cases of system-switching configurations and alternate operations that could result in maximum fault conditions.

G. The calculations shall include the ac fault-current decay from induction motors, synchronous motors, and asynchronous generators and shall apply to low- and medium-voltage, three-phase ac systems. The calculations shall also account for the fault-current dc decrement, to address the asymmetrical requirements of the interrupting equipment.

1. For grounded systems, provide a bolted line-to-ground fault-current study for areas as defined for the three-phase bolted fault short-circuit study.

H. Calculate short-circuit momentary and interrupting duties for a three-phase bolted fault at each of the following:

1. Electric utility's supply termination point.
2. Incoming switchgear.
3. Unit substation primary and secondary terminals.
4. Low-voltage switchgear.
5. Motor-control centers.
6. Control panels.
7. Standby generators and automatic transfer switches.
8. Branch circuit panelboards.
9. Disconnect switches.

3.3 ADJUSTING

A. Make minor modifications to equipment as required to accomplish compliance with short-circuit study.

3.4 DEMONSTRATION

A. Train Owner's operating and maintenance personnel in the use of study results.

END OF SECTION 260572

SECTION 260573 - OVERCURRENT PROTECTIVE DEVICE COORDINATION STUDY

PART 1 - GENERAL

1.1 RELATED DOCUMENTS

A. Drawings and general provisions of the Contract, including General and Supplementary Conditions and Division 01 Specification Sections, apply to this Section.

1.2 SUMMARY

B. Section includes computer-based, overcurrent protective device coordination studies to determine overcurrent protective devices and to determine overcurrent protective device settings for selective tripping.

1.3 DEFINITIONS

A. Existing to Remain: Existing items of construction that are not to be removed and that are not otherwise indicated to be removed, removed and salvaged, or removed and reinstalled.

B. One-Line Diagram: A diagram which shows, by means of single lines and graphic symbols, the course of an electric circuit or system of circuits and the component devices or parts used therein.

C. Protective Device: A device that senses when an abnormal current flow exists and then removes the affected portion from the system.

D. SCCR: Short-circuit current rating.

E. Service: The conductors and equipment for delivering electric energy from the serving utility to the wiring system of the premises served.

1.4 ACTION SUBMITTALS

A. Product Data: For computer software program to be used for studies.

B. Other Action Submittals: Submit the following after the approval of system protective devices submittals. Submittals shall be in digital form.

1. Coordination-study input data, including completed computer program input data sheets.
2. Study and equipment evaluation reports.
3. Overcurrent protective device coordination study report; signed, dated, and sealed by a qualified professional engineer.

a. Submit study report for action prior to receiving final approval of the distribution equipment submittals. If formal completion of studies will cause delay in equipment manufacturing, obtain approval from Architect for preliminary submittal of sufficient study data to ensure that the selection of devices and associated characteristics is satisfactory.

1.5 INFORMATIONAL SUBMITTALS

A. Qualification Data: For Coordination Study Specialist and Field Adjusting Agency.

B. Product Certificates: For overcurrent protective device coordination study software, certifying compliance with IEEE 399.

1.6 CLOSEOUT SUBMITTALS

A. Operation and Maintenance Data: For the overcurrent protective devices to include in emergency, operation, and maintenance manuals.

1. In addition to items specified in Section 017823 "Operation and Maintenance Data," include the following:

a. The following parts from the Protective Device Coordination Study Report:

1) One-line diagram.
2) Protective device coordination study.
3) Time-current coordination curves.

b. Power system data.

1.7 QUALITY ASSURANCE

A. Studies shall use computer programs that are distributed nationally and are in wide use. Software algorithms shall comply with requirements of standards and guides specified in this Section. Manual calculations are unacceptable.

B. Coordination Study Software Developer Qualifications: An entity that owns and markets computer software used for studies, having performed successful studies of similar magnitude on electrical distribution systems using similar devices.

1. The computer program shall be developed under the charge of a licensed professional engineer who holds IEEE Computer Society's Certified Software Development Professional certification.

C. Coordination Study Specialist Qualifications: Professional engineer in charge of performing the study and documenting recommendations, licensed in the state where Project is located. All elements of the study shall be performed under the direct supervision and control of this professional engineer.

D. Field Adjusting Agency Qualifications: An independent agency, with the experience and capability to adjust overcurrent devices and to conduct the testing indicated, that is a member company of the International Electrical Testing Association or is a nationally recognized testing laboratory (NRTL) as defined by OSHA in 29 CFR 1910.7, and that is acceptable to authorities having jurisdiction.

PART 2 - PRODUCTS

2.1 COMPUTER SOFTWARE DEVELOPERS

A. Software Developers:

1. Manufacturers: Subject to compliance with requirements, provide products by the following:

    a. SKM Systems Analysis, Inc.
    b. ETAP

B. Comply with IEEE 242 and IEEE 399.

C. Analytical features of device coordination study computer software program shall have the capability to calculate "mandatory," "very desirable," and "desirable" features as listed in IEEE 399.

D. Computer software program shall be capable of plotting and diagramming time-current-characteristic curves as part of its output. Computer software program shall report device settings and ratings of all overcurrent protective devices and shall demonstrate selective coordination by computer-generated, time-current coordination plots.

1. Optional Features:

    a. Arcing faults.
    b. Simultaneous faults.
    c. Explicit negative sequence.
    d. Mutual coupling in zero sequence.

2.2 PROTECTIVE DEVICE COORDINATION STUDY REPORT CONTENTS

A. Executive summary.

B. Study descriptions, purpose, basis and scope. Include case descriptions, definition of terms and guide for interpretation of the computer printout.

C. One-line diagram, showing the following:

1. Protective device designations and ampere ratings.
2. Cable size and lengths.
3. Transformer kilovolt ampere (kVA) and voltage ratings.

4. Motor and generator designations and kVA ratings.
5. Switchgear, switchboard, motor-control center, and panelboard designations.

D. Study Input Data: As described in "Power System Data" Article.

E. Short-Circuit Study Output: As specified in "Short-Circuit Study Output" Paragraph in "Short-Circuit Study Report Contents" Article in Section 260572 "Overcurrent Protective Device Short-Circuit Study."

F. Protective Device Coordination Study:

1. Report recommended settings of protective devices, ready to be applied in the field. Use manufacturer's data sheets for recording the recommended setting of overcurrent protective devices when available.

    a. Phase and Ground Relays:

        1) Device tag.
        2) Relay current transformer ratio and tap, time dial, and instantaneous pickup value
        3) Recommendations on improved relaying systems, if applicable.

    b. Circuit Breakers:

        1) Adjustable pickups and time delays (long time, short time, ground).
        2) Adjustable time-current characteristic.
        3) Adjustable instantaneous pickup.
        4) Recommendations on improved trip systems, if applicable.

    c. Fuses: Show current rating, voltage, and class.

G. Time-Current Coordination Curves: Determine settings of overcurrent protective devices to achieve selective coordination. Graphically illustrate that adequate time separation exists between devices installed in series, including power utility company's upstream devices. Prepare separate sets of curves for the switching schemes and for emergency periods where the power source is local generation. Show the following information:

1. Device tag and title, one-line diagram with legend identifying the portion of the system covered.
2. Terminate device characteristic curves at a point reflecting maximum symmetrical or asymmetrical fault current to which the device is exposed.
3. Identify the device associated with each curve by manufacturer type, function, and, if applicable, tap, time delay, and instantaneous settings recommended.
4. Plot the following listed characteristic curves, as applicable:

    a. Power utility's overcurrent protective device.
    b. Medium-voltage equipment overcurrent relays.
    c. Medium- and low-voltage fuses including manufacturer's minimum melt, total clearing, tolerance, and damage bands.
    d. Low-voltage equipment circuit-breaker trip devices, including manufacturer's tolerance bands.

e. Transformer full-load current, magnetizing inrush current, and ANSI through-fault protection curves.
f. Cables and conductors damage curves.
g. Ground-fault protective devices.
h. Motor-starting characteristics and motor damage points.
i. Generator short-circuit decrement curve and generator damage point.
j. The largest feeder circuit breaker in each motor-control center and panelboard.

5. Series rating on equipment allows the application of two series interrupting devices for a condition where the available fault current is greater than the interrupting rating of the downstream equipment. Both devices share in the interruption of the fault and selectivity is sacrificed at high fault levels. Maintain selectivity for tripping currents caused by overloads.
6. Provide adequate time margins between device characteristics such that selective operation is achieved.
7. Comments and recommendations for system improvements.

PART 3 - EXECUTION

3.1 EXAMINATION

A. Examine Project overcurrent protective device submittals for compliance with electrical distribution system coordination requirements and other conditions affecting performance. Devices to be coordinated are indicated on Drawings.

1. Proceed with coordination study only after relevant equipment submittals have been assembled. Overcurrent protective devices that have not been submitted and approved prior to coordination study may not be used in study.

3.2 PROTECTIVE DEVICE COORDINATION STUDY

A. Comply with IEEE 242 for calculating short-circuit currents and determining coordination time intervals.

B. Comply with IEEE 399 for general study procedures.

C. The study shall be based on the device characteristics supplied by device manufacturer.

D. The extent of the electrical power system to be studied is indicated on Drawings.

E. Begin analysis at the service, extending down to the system overcurrent protective devices as follows:

1. To normal system low-voltage load buses where fault current is 10 kA or less.
2. Exclude equipment rated 240-V ac or less when supplied by a single transformer rated less than 125 kVA.

F. Study electrical distribution system from normal and alternate power sources throughout electrical distribution system for Project. Study all cases of system-switching configurations and alternate operations that could result in maximum fault conditions.

G. Transformer Primary Overcurrent Protective Devices:

1. Device shall not operate in response to the following:
    a. Inrush current when first energized.
    b. Self-cooled, full-load current or forced-air-cooled, full-load current, whichever is specified for that transformer.
    c. Permissible transformer overloads according to IEEE C57.96 if required by unusual loading or emergency conditions.
2. Device settings shall protect transformers according to IEEE C57.12.00, for fault currents.

H. Motor Protection:

1. Select protection for low-voltage motors according to IEEE 242 and NFPA 70.
2. Select protection for motors served at voltages more than 600 V according to IEEE 620.

I. Conductor Protection: Protect cables against damage from fault currents according to ICEA P-32-382, ICEA P-45-482, and protection recommendations in IEEE 242. Demonstrate that equipment withstands the maximum short-circuit current for a time equivalent to the tripping time of the primary relay protection or total clearing time of the fuse. To determine temperatures that damage insulation, use curves from cable manufacturers or from listed standards indicating conductor size and short-circuit current.

J. Generator Protection: Select protection according to manufacturer's written recommendations and to IEEE 242.

K. The calculations shall include the ac fault-current decay from induction motors, synchronous motors, and asynchronous generators and shall apply to low- and medium-voltage, three-phase ac systems. The calculations shall also account for the fault-current dc decrement, to address the asymmetrical requirements of the interrupting equipment.

1. For grounded systems, provide a bolted line-to-ground fault-current study for areas as defined for the three-phase bolted fault short-circuit study.

L. Calculate short-circuit momentary and interrupting duties for a three-phase bolted fault and single line-to-ground fault at each of the following:

1. Electric utility's supply termination point.
2. Switchgear.
3. Unit substation primary and secondary terminals.
4. Low-voltage switchgear.
5. Motor-control centers.
6. Standby generators and automatic transfer switches.
7. Branch circuit panelboards.

M. Protective Device Evaluation:

1. Evaluate equipment and protective devices and compare to short-circuit ratings.
2. Adequacy of switchgear, motor-control centers, and panelboard bus bars to withstand short-circuit stresses.

3.3 LOAD-FLOW AND VOLTAGE-DROP STUDY

A. Perform a load-flow and voltage-drop study to determine the steady-state loading profile of the system. Analyze power system performance two times as follows:

1. Determine load-flow and voltage drop based on full-load currents obtained in "Power System Data" Article.
2. Determine load-flow and voltage drop based on 80 percent of the design capacity of the load buses.
3. Prepare the load-flow and voltage-drop analysis and report to show power system components that are overloaded, or might become overloaded; show bus voltages that are less than as prescribed by NFPA 70.

3.4 MOTOR-STARTING STUDY

A. Perform a motor-starting study to analyze the transient effect of the system's voltage profile during motor starting. Calculate significant motor-starting voltage profiles and analyze the effects of the motor starting on the power system stability.

B. Prepare the motor-starting study report, noting light flicker for limits proposed by IEEE 141 and voltage sags so as not to affect the operation of other utilization equipment on the system supplying the motor.

3.5 POWER SYSTEM DATA

A. Obtain all data necessary for the conduct of the overcurrent protective device study.

1. Verify completeness of data supplied in the one-line diagram on Drawings. Call discrepancies to the attention of Engineer.
2. For new equipment, use characteristics submitted under the provisions of action submittals and information submittals for this Project.
3. For existing equipment, whether or not relocated obtain required electrical distribution system data by field investigation and surveys, conducted by qualified technicians and engineers. The qualifications of technicians and engineers shall be qualified as defined by NFPA 70E.

B. Gather and tabulate the following input data to support coordination study. The list below is a guide. Comply with recommendations in IEEE 551 for the amount of detail required to be acquired in the field. Field data gathering shall be under the direct supervision and control of the engineer in charge of performing the study, and shall be by the engineer or its representative who holds NETA ETT Level III certification or NICET Electrical Power Testing Level III certification.

1. Product Data for overcurrent protective devices specified in other Sections and involved in overcurrent protective device coordination studies. Use equipment designation tags that are consistent with electrical distribution system diagrams, overcurrent protective device submittals, input and output data, and recommended device settings.
2. Electrical power utility impedance at the service.
3. Power sources and ties.
4. Short-circuit current at each system bus, three phase and line-to-ground.
5. Full-load current of all loads.
6. Voltage level at each bus.
7. For transformers, include kVA, primary and secondary voltages, connection type, impedance, X/R ratio, taps measured in percent, and phase shift.
8. For reactors, provide manufacturer and model designation, voltage rating, and impedance.
9. For circuit breakers and fuses, provide manufacturer and model designation. List type of breaker, type of trip and available range of settings, SCCR, current rating, and breaker settings.
10. Generator short-circuit current contribution data, including short-circuit reactance, rated kVA, rated voltage, and X/R ratio.
11. For relays, provide manufacturer and model designation, current transformer ratios, potential transformer ratios, and relay settings.
12. Maximum demands from service meters.
13. Busway manufacturer and model designation, current rating, impedance, lengths, and conductor material.
14. Motor horsepower and NEMA MG 1 code letter designation.
15. Low-voltage cable sizes, lengths, number, conductor material, and conduit material (magnetic or nonmagnetic).
16. Medium-voltage cable sizes, lengths, conductor material, and cable construction and metallic shield performance parameters.
17. Data sheets to supplement electrical distribution system diagram, cross-referenced with tag numbers on diagram, showing the following:

    a. Special load considerations, including starting inrush currents and frequent starting and stopping.
    b. Transformer characteristics, including primary protective device, magnetic inrush current, and overload capability.
    c. Motor full-load current, locked rotor current, service factor, starting time, type of start, and thermal-damage curve.
    d. Generator thermal-damage curve.
    e. Ratings, types, and settings of utility company's overcurrent protective devices.
    f. Special overcurrent protective device settings or types stipulated by utility company.
    g. Time-current-characteristic curves of devices indicated to be coordinated.
    h. Manufacturer, frame size, interrupting rating in amperes rms symmetrical, ampere or current sensor rating, long-time adjustment range, short-time adjustment range, and instantaneous adjustment range for circuit breakers.
    i. Manufacturer and type, ampere-tap adjustment range, time-delay adjustment range, instantaneous attachment adjustment range, and current transformer ratio for overcurrent relays.

j. Panelboards, switchboards, motor-control center ampacity, and SCCR in amperes rms symmetrical.
k. Identify series-rated interrupting devices for a condition where the available fault current is greater than the interrupting rating of the downstream equipment. Obtain device data details to allow verification that series application of these devices complies with NFPA 70 and UL 489 requirements.

3.6 FIELD ADJUSTING

A. Adjust relay and protective device settings according to the recommended settings provided by the coordination study. Field adjustments shall be completed by the engineering service division of the equipment manufacturer under the Startup and Acceptance Testing contract portion.

B. Make minor modifications to equipment as required to accomplish compliance with short-circuit and protective device coordination studies.

C. Testing and adjusting shall be by a full-time employee of the Field Adjusting Agency, who holds NETA ETT Level III certification or NICET Electrical Power Testing Level III certification.

1. Perform each visual and mechanical inspection and electrical test stated in NETA Acceptance Testing Specification. Certify compliance with test parameters. Perform NETA tests and inspections for all adjustable overcurrent protective devices.

3.7 DEMONSTRATION

A. Engage the Coordination Study Specialist to train Owner's maintenance personnel in the following:

1. Acquaint personnel in the fundamentals of operating the power system in normal and emergency modes.
2. Hand-out and explain the objectives of the coordination study, study descriptions, purpose, basis, and scope. Include case descriptions, definition of terms, and guide for interpreting the time-current coordination curves.
3. Adjust, operate, and maintain overcurrent protective device settings.

END OF SECTION 260573

SECTION 260574 - OVERCURRENT PROTECTIVE DEVICE ARC-FLASH STUDY

PART 1 - GENERAL

1.1 RELATED DOCUMENTS

A. Drawings and general provisions of the Contract, including General and Supplementary Conditions and Specification Sections, apply to this Section.

1.2 SUMMARY

A. Section includes a computer-based, arc-flash study to determine the arc-flash hazard distance and the incident energy to which personnel could be exposed during work on or near electrical equipment.

1.3 DEFINITIONS

A. Existing to Remain: Existing items of construction that are not to be removed and that are not otherwise indicated to be removed, removed and salvaged, or removed and reinstalled.

B. One-Line Diagram: A diagram which shows, by means of single lines and graphic symbols, the course of an electric circuit or system of circuits and the component devices or parts used therein.

C. Protective Device: A device that senses when an abnormal current flow exists and then removes the affected portion from the system.

D. SCCR: Short-circuit current rating.

E. Service: The conductors and equipment for delivering electric energy from the serving utility to the wiring system of the premises served.

1.4 ACTION SUBMITTALS

A. Product Data: For computer software program to be used for studies.

B. Other Action Submittals: Submit the following submittals after the approval of system protective devices submittals. Submittals shall be in digital form.

1. Arc-flash study input data, including completed computer program input data sheets.
2. Arc-flash study report; signed, dated, and sealed by a qualified professional engineer.

a. Submit study report for action prior to receiving final approval of the distribution equipment submittals. If formal completion of studies will cause delay in equipment manufacturing, obtain approval from Architect for preliminary submittal of sufficient study data to ensure that the selection of devices and associated characteristics is satisfactory.

1.5 INFORMATIONAL SUBMITTALS

A. Qualification Data: For Arc-Flash Study Specialist and Field Adjusting Agency.

B. Product Certificates: For arc-flash hazard analysis software, certifying compliance with IEEE 1584 and NFPA 70E.

1.6 CLOSEOUT SUBMITTALS

A. Maintenance procedures according to requirements in NFPA 70E shall be provided in the equipment manuals.

B. Operation and Maintenance Procedures: In addition to items specified in Section 017823 "Operation and Maintenance Data," provide maintenance procedures for use by Owner's personnel that comply with requirements in NFPA 70E.

1.7 QUALITY ASSURANCE

A. Studies shall use computer programs that are distributed nationally and are in wide use. Software algorithms shall comply with requirements of standards and guides specified in this Section. Manual calculations are unacceptable.

B. Arc-Flash Study Software Developer Qualifications: An entity that owns and markets computer software used for studies, having performed successful studies of similar magnitude on electrical distribution systems using similar devices.

1. The computer program shall be developed under the charge of a licensed professional engineer who holds IEEE Computer Society's Certified Software Development Professional certification.

C. Arc-Flash Study Specialist Qualifications: Professional engineer in charge of performing the study, analyzing the arc flash, and documenting recommendations, licensed in the state where Project is located. All elements of the study shall be performed under the direct supervision and control of this professional engineer.

D. Field Adjusting Agency Qualifications: An independent agency, with the experience and capability to adjust overcurrent devices and to conduct the testing indicated, that is a member company of the International Electrical Testing Association or is a nationally recognized testing laboratory (NRTL) as defined by OSHA in 29 CFR 1910.7, and that is acceptable to authorities having jurisdiction.

PART 2 - PRODUCTS

2.1 COMPUTER SOFTWARE DEVELOPERS

A. Software Developers:

1. Manufacturers: Subject to compliance with requirements, provide products by the following:

a. SKM Systems Analysis, Inc.
b. ETAP

B. Comply with IEEE 1584 and NFPA 70E.

C. Analytical features of device coordination study computer software program shall have the capability to calculate "mandatory," "very desirable," and "desirable" features as listed in IEEE 399.

2.2 ARC-FLASH STUDY REPORT CONTENT

A. Executive summary.

B. Study descriptions, purpose, basis and scope.

C. One-line diagram, showing the following:

1. Protective device designations and ampere ratings.
2. Cable size and lengths.
3. Transformer kilovolt ampere (kVA) and voltage ratings.
4. Motor and generator designations and kVA ratings.
5. Switchgear, switchboard, motor-control center and panelboard designations.

D. Study Input Data: As described in "Power System Data" Article.

E. Short-Circuit Study Output: As specified in "Short Circuit Study Output" Paragraph in "Short-Circuit Study Report Contents" Article in Section 260572 "Overcurrent Protective Device Short-Circuit Study."

F. Protective Device Coordination Study Report Contents: As specified in "Protective Device Coordination Study Report Contents" Article in Section 260573 "Overcurrent Protective Device Coordination Study."

G. Arc-Flash Study Output:

1. Interrupting Duty Report: Three-phase and unbalanced fault calculations, showing the following for each overcurrent device location:

a. Voltage.
b. Calculated symmetrical fault-current magnitude and angle.
c. Fault-point X/R ratio.
d. No AC Decrement (NACD) ratio.
e. Equivalent impedance.

f. Multiplying factors for 2-, 3-, 5-, and 8-cycle circuit breakers rated on a symmetrical basis.
g. Multiplying factors for 2-, 3-, 5-, and 8-cycle circuit breakers rated on a total basis

H. Incident Energy and Flash Protection Boundary Calculations:

1. Arcing fault magnitude with and without required Arc Energy Reduction methods.
2. Protective device clearing time.
3. Duration of arc.
4. Arc-flash boundary.
5. Working distance.
6. Incident energy.
7. Hazard risk category.
8. Recommendations for arc-flash energy reduction.

I. Fault study input data, case descriptions, and fault-current calculations including a definition of terms and guide for interpretation of the computer printout.

2.3 ARC-FLASH WARNING LABELS

A. Comply with requirements in Section 260553 "Identification for Electrical Systems." Produce a 3.5-by-5-inch thermal transfer label of high-adhesion polyester for each work location included in the analysis.

B. The label shall have an orange header with the wording, "WARNING, ARC-FLASH HAZARD," and shall include the following information taken directly from the arc-flash hazard analysis:

1. Location designation.
2. Nominal voltage.
3. Flash protection boundary.
4. Hazard risk category.
5. Incident energy.
6. Working distance.
7. Engineering report number, revision number, and issue date.

C. Labels shall be machine printed, with no field-applied markings.

PART 3 - EXECUTION

3.1 EXAMINATION

A. Examine Project overcurrent protective device submittals. Proceed with arc-flash study only after relevant equipment submittals have been assembled. Overcurrent protective devices that have not been submitted and approved prior to arc-flash study may not be used in study.

3.2 ARC-FLASH HAZARD ANALYSIS

A. Comply with NFPA 70E and its Annex D for hazard analysis study.

B. Preparatory Studies:

1. Protective Device Coordination Study Report Contents: As specified in "Protective Device Coordination Study Report Contents" Article in Section 16402 "Overcurrent Protective Device Coordination Study."

C. Calculate maximum and minimum contributions of fault-current size.

1. The minimum calculation shall assume that the utility contribution is at a minimum and shall assume no motor load.
2. The maximum calculation shall assume a maximum contribution from the utility and shall assume motors to be operating under full-load conditions.

D. Calculate the arc-flash protection boundary and incident energy at locations in the electrical distribution system where personnel could perform work on energized parts.

E. Include medium- and low-voltage equipment locations, except equipment rated 240-V ac or less fed from transformers less than 125 kVA.

F. Safe working distances shall be specified for calculated fault locations based on the calculated arc-flash boundary, considering incident energy of 1.2 cal/sq.cm.

G. Incident energy calculations shall consider the accumulation of energy over time when performing arc-flash calculations on buses with multiple sources. Iterative calculations shall take into account the changing current contributions, as the sources are interrupted or decremented with time. Fault contribution from motors and generators shall be decremented as follows:

1. Fault contribution from induction motors should not be considered beyond three to five cycles.
2. Fault contribution from synchronous motors and generators should be decayed to match the actual decrement of each as closely as possible (e.g., contributions from permanent magnet generators will typically decay from 10 per unit to three per unit after 10 cycles).

H. Arc-flash computation shall include both line and load side of a circuit breaker as follows:

1. When the circuit breaker is in a separate enclosure.
2. When the line terminals of the circuit breaker are separate from the work location.

I. Base arc-flash calculations on actual overcurrent protective device clearing time. Cap maximum clearing time at two seconds based on IEEE 1584, Section B.1.2.

3.3 POWER SYSTEM DATA

A. Obtain all data necessary for the conduct of the arc-flash hazard analysis.

1. Verify completeness of data supplied on the one-line diagram on Drawings and under "Preparatory Studies" Paragraph in "Arc-Flash Hazard Analysis" Article. Call discrepancies to the attention of Engineer.
2. For new equipment, use characteristics submitted under the provisions of action submittals and information submittals for this Project.
3. For existing equipment, whether or not relocated, obtain required electrical distribution system data by field investigation and surveys, conducted by qualified technicians and engineers.

B. Electrical Survey Data: Gather and tabulate the following input data to support study. Comply with recommendations in IEEE 1584 and NFPA 70E as to the amount of detail that is required to be acquired in the field. Field data gathering shall be under the direct supervision and control of the engineer in charge of performing the study, and shall be by the engineer or its representative who holds NETA ETT Level III certification or NICET Electrical Power Testing Level III certification.

1. Product Data for overcurrent protective devices specified in other Sections and involved in overcurrent protective device coordination studies. Use equipment designation tags that are consistent with electrical distribution system diagrams, overcurrent protective device submittals, input and output data, and recommended device settings.
2. Obtain electrical power utility impedance at the service.
3. Power sources and ties.
4. Short-circuit current at each system bus, three phase and line-to-ground.
5. Full-load current of all loads.
6. Voltage level at each bus.
7. For transformers, include kVA, primary and secondary voltages, connection type, impedance, X/R ratio, taps measured in per cent, and phase shift.
8. For reactors, provide manufacturer and model designation, voltage rating and impedance.
9. For circuit breakers and fuses, provide manufacturer and model designation. List type of breaker, type of trip and available range of settings, SCCR, current rating, and breaker settings.
10. Generator short-circuit current contribution data, including short-circuit reactance, rated kVA, rated voltage, and X/R ratio.
11. For relays, provide manufacturer and model designation, current transformer ratios, potential transformer ratios, and relay settings.
12. Busway manufacturer and model designation, current rating, impedance, lengths, and conductor material.
13. Motor horsepower and NEMA MG 1 code letter designation.
14. Low-voltage cable sizes, lengths, number, conductor material and conduit material (magnetic or nonmagnetic).
15. Medium-voltage cable sizes, lengths, conductor material, and cable construction and metallic shield performance parameters.

3.4 LABELING

A. Apply one arc-flash label for 600-V ac, 480-V ac, and applicable 208-V ac panelboards and disconnects and for each of the following locations:

1. Motor-control center.
2. Low-voltage switchboard.
3. Switchgear.
4. Medium-voltage switch.
5. Control panel.

3.5 APPLICATION OF WARNING LABELS

A. Install the arc-fault warning labels under the direct supervision and control of the Arc-Flash Study Specialist.

3.6 DEMONSTRATION

A. Engage the Arc-Flash Study Specialist to train Owner's maintenance personnel in the potential arc-flash hazards associated with working on energized equipment and the significance of the arc-flash warning labels.

END OF SECTION 260574

SECTION 261200 - MEDIUM-VOLTAGE TRANSFORMERS

PART 1 - GENERAL

1.1 SUMMARY

A. This Section includes the following types of transformers with medium-voltage primaries:
   1. Pad-mounted, liquid-filled transformers.

1.2 SUBMITTALS

A. Product Data: Include rated nameplate data, capacities, weights, dimensions, minimum clearances, installed devices and features, location of each field connection, and performance for each type and size of transformer indicated.

B. Shop Drawings: Wiring and connection diagrams.

C. Source quality-control test reports.

D. Follow-up service reports.

E. Operation and Maintenance Data: For transformer and accessories to include in emergency, operation, and maintenance manuals.

1.3 QUALITY ASSURANCE

A. Electrical Components, Devices, and Accessories: Listed and labeled as defined in NFPA 70, Article 100, by a testing agency acceptable to authorities having jurisdiction, and marked for intended use.

B. Comply with manufactures testing requirements.

C. Comply with NFPA 70-2011.

1.4 DELIVERY, STORAGE, AND HANDLING

A. Store transformers so condensation will not form on or in units. Provide temporary heating according to manufacturer's written instruction

1.5 COORDINATION

A. Coordinate size and location of concrete bases. Cast anchor-bolt inserts into bases. Concrete, reinforcement, and formwork requirements are specified on the drawings.

PART 2 - PRODUCTS

2.1 MANUFACTURERS

A. Available Manufacturers for Union transformer: Subject to compliance with requirements, manufacturers offering products that may be incorporated into the Work include, but are not limited to, the following:
   1. Cooper Industries; Cooper Power Systems Division, Padmount transformers.
   2. GE Electrical Distribution & Control, Padmount transformers.
   3. Square D/Groupe Schneider NA, Padmount transformers.
   4. Van Tran

2.2 PAD-MOUNTED, LIQUID-FILLED TRANSFORMERS

A. KVA rating: 750

B. Applicable Standards:
   1. ANSI C57.12.13
   2. IEEE C57.12.00
   3. IEEE C57.12.22,
   4. IEEE C57.12.26,

C. Voltage:
   1. Primary 13.2KV
   2. Secondary: 480Y/277V 3Ø 4W

D. Winding Material: Copper

E. Insulating Liquid: Less-flammable liquid; acceptable and suitable for use on building rooftops.

F. Insulation Temperature Rise: 65 deg C when operated at rated kVA output in a 40 deg C ambient temperature. Transformer shall be rated to operate at rated kilovolt ampere in an average ambient temperature of 30 deg C over 24 hours with a maximum ambient temperature of 40 deg C without loss of service life expectancy.

G. Basic Impulse Level: 110 kV.

H. Sound level must comply with NEMA TR 1 requirements.

I. Enclosure Integrity: Comply with IEEE C57.12.28 for pad-mounted enclosures that contain energized electrical equipment in excess of 600 V that may be exposed to public.
   1. Color: Green

J. Winding Connections: Connection of windings and terminal markings must comply with IEEE C57.12.70.

K. Full-Capacity Voltage Taps: Four 2.5 percent taps, 2 above and 2 below rated high voltage; with externally operable tap changer for de-energized use and with position indicator and padlock hasp.

L. Primary Fuses: 150-kV fuse assembly with fuses complying with IEEE C37.47. Rating of current-limiting fuses shall be 50-kA RMS at specified system voltage.
   1. Silver Link Bayonet fuses in series with current limiting fuses.

M. Surge Arresters: Distribution class, one for each primary phase; complying with IEEE C62.11 and NEMA LA 1; support from tank wall within high-voltage compartment. Transformers shall have six arresters for dual radial feed circuits.

N. High-Voltage Terminations and Equipment: Dead front with universal-type bushing wells for dead-front bushing-well inserts, complying with IEEE 386 and including the following:
1. Bushing-Well Inserts: One for each high-voltage bushing well, 600 amp.
2. Surge Arresters: Dead-front, elbow-type, metal-oxide-varistor units.
3. Parking Stands: One for each high-voltage bushing well.
4. Portable Insulated Bushings: Arranged for parking insulated, high-voltage, load-break cable terminators; one for each primary feeder conductor terminating at transformer.

I. Accessories:
1. Drain Valve: 1 inch (25 mm), with sampling device.
2. Dial-type thermometer.
3. Liquid-level gage.
4. Pressure-vacuum gage.
5. Pressure Relief Device: Self-sealing with an indicator.
6. Mounting provisions for low-voltage current transformers.
7. Sampling port with hindged cover to allow for sampling without de-energizing transformer.

2.3 IDENTIFICATION DEVICES

A. Nameplates: Engraved, laminated-plastic or metal nameplate for each transformer, mounted with corrosion-resistant screws. Nameplates and label products are specified in Division 16 Section "Electrical Identification."

2.4 SOURCE QUALITY CONTROL

A. Factory Tests: Perform design and routine tests according to standards specified for components. Conduct transformer tests according to IEEE C57.12.91.

B. Electrical Components, Devices, and Accessories: Listed and labeled in accordance with NFPA 70, by qualified electrical testing laboratory recognized by authorities having jurisdiction, and marked for intended location and application.

C. Comply with IEEE C2.

D. Comply with IEEE C57.12.00

PART 3 - EXECUTION

3.1 EXAMINATION

A. Examine areas and conditions for compliance with requirements for medium-voltage transformers.

B. Examine roughing-in of conduits and grounding systems to verify the following:
   1. Wiring entries comply with layout requirements.
   2. Entries are within conduit-entry tolerances specified by manufacturer and no feeders will have to cross section barriers to reach load or line lugs.

C. Examine walls, floors, roofs, and concrete bases for suitable mounting conditions where transformers will be installed.

D. Verify that ground connections are in place and that requirements in Division 16 Section "Grounding and Bonding" have been met. Maximum ground resistance shall be 5 ohms at location of transformer.

E. Proceed with installation only after unsatisfactory conditions have been corrected.

3.2 INSTALLATION

A. Install transformers on concrete bases.
   1. Anchor transformers to steel grating bases according to manufacturer's written instructions.

B. Maintain minimum clearances and workspace at equipment according to manufacturer's written instructions and NFPA 70.

C. Grounding per NFPA 70.

3.3 IDENTIFICATION

A. Identify field-installed wiring and components and provide warning signs as specified in "Electrical Identification."

3.4 CONNECTIONS

A. Ground equipment according to "Grounding and Bonding."

B. Connect wiring according to "Conductors and Cables."

C. Tighten electrical connectors and terminals according to manufacturer's published torque-tightening values.

3.5 FIELD QUALITY CONTROL

A. Manufacturer's Field Service: Engage a factory-authorized service representative to inspect, test, and adjust field-assembled components and equipment installation, including connections, and to assist in field testing. Report results in writing.

B. Testing Agency: Engage a qualified testing and inspecting agency to perform the following field tests and inspections and prepare test reports:

C. Perform the following field tests and inspections and prepare test reports:
   1. After installing transformers but before primary is energized, verify that grounding

system at substation is tested at specified value or less.

2. After installing transformers and after electrical circuitry has been energized, test for compliance with requirements.
3. Perform electrical test and visual and mechanical inspection per manufactures requirements.
4. Test and adjust controls and safeties. Replace damaged and malfunctioning controls and equipment.

D. Remove malfunctioning units, replace with new units, and retest as specified above.

E. Test Reports: Prepare written reports to record the following:
1. Test procedures used.
2. Test results that comply with requirements.
3. Test results that do not comply with requirements and corrective actions taken to achieve compliance with requirements.

END OF SECTION 261200

SECTION 262000 - SERVICE AND DISTRIBUTION

PART 1 - GENERAL

1.1 SYSTEM VOLTAGE

A. The building service from the utility company (Entergy) shall be 480Y/277V 3Ø 4W. Building shall utilize 480Y/277V 3Ø 4W & 208Y/120V 3Ø 4W

1.2 TERMINATIONS

A. All wiring shall be sized based on 75°C rated conductors. All connectors shall be rated for 75°C in accordance with N.E.C. Article 110-14 requirements.

PART 2 - PRODUCTS

2.1 SAFETY SWITCHES

A. Furnish and install safety switches as shown on the Drawings. All switches shall be fused NEMA Heavy Duty Type HD and Underwriter's Laboratories listed. All switches shall have blades that are fully visible in the "OFF" position with the door open. Switches shall be dead-front construction with permanently attached arc suppressers. Lugs shall be UL listed for copper and aluminum conductor and front removable. All current carrying parts shall be plated to resist corrosion. Switches shall be quick-make, quick-break type. During operation of the switch, the movable contacts shall not be able to be restrained by the handle once the closing or the opening action of the contacts has been initiated. Switches shall have cover interlocks to prevent opening of the switch door while the switch is in the "ON" position or closing the switch with the door open. Switch shall have padlocking capabilities in the "OFF" position.

B. Safety switches shall be rated 600 volts for 480 volt service and rated 240 volts for 208 volt service. Switches shall be motor rated when used for motor loads. Switches shall be NEMA 1 enclosed for indoor applications and NEMA 3R for outdoor or wet area locations.

C. Switches used for service entrance shall be service entrance rated. Safety switches shall be furnished complete with fuses.

D. Approved Manufacturers:

1. Eaton
2. Square D (Schneider Electric)
3. ABB
4. Siemens

2.2 FUSES

A. All fuse holders shall be provided with dual-element, time-lag fuses as scheduled on the Drawings or as recommended by the equipment manufacturer. Fuses shall be rated 200,000 AIC. Fuses shall be Buss Fusetron, Economy Econ, or Gould Shawmut Tri-Onic for component protection and Buss Limitron, Economy Econolin, or Gould Shawmut Amp-Trap for circuit protection.

2.3 CIRCUIT BREAKER PANELBOARDS

A. Panelboards shall be sized as shown on the drawings and schedules, and shall be the bolted breaker panelboard type. Panelboards shall have copper bussing. Panelboards shall have door-in-door trim.

B. All branch breakers are to be quick-make, quick-break (over center toggle device) with trip indication and common trip on all multiple breakers. Trip indication shall be clearly shown by breaker handle taking a position between "ON" and "OFF" position. Breakers shall be ambient compensated to carry full NEC load in 120 degree F room temperature. Panelboards shall have distributed phase busing throughout. Any two adjacent single pole breakers shall be replaceable by a two pole breaker, and any three adjacent single pole breakers shall be replaceable by a three pole breaker.

C. Minimum interrupting capacity of breakers shall be as shown on panel schedules. No breakers shall be rated less than 10,000 RMS symmetrical amperes.

D. Branch breakers shall be numbered 1, 3, 5, etc. from top to bottom beginning at the top of the left hand column so that #1 shall be on phase A, #3 on phase B, and #5 on phase C.

E. Panelboards shall include main circuit breakers where indicated on plans and in the following conditions regardless of designation on plan:

1. Panelboard is served from a transformer (utility or otherwise.) and no overcurrent protective device exists between the transformer and the panelboard.
2. Panelboard is served from a wireway and no overcurrent protective device exists between the wireway and the panelboard.

F. Approved Manufacturers:

1. Eaton
2. Square D (Schneider Electric)
3. ABB
4. Siemens

2.4 DRY TYPE TRANSFORMERS

A. Contractor shall install dry type transformer(s) in the size and at the location(s) as shown on the drawings. Transformers will be used to step down voltage from 480 volts to 120/208 volts. All transformers shall comply and must be tested in accordance with UL, NEMA and ANSI standards. Transformers shall be energy efficient and shall meet NEMA

Standard TP-1 requirements.

B. Transformers shall have the KVA ratings shown on the drawings. Transformers shall be three phase type rated for 480 volts primary and 120/208 volt secondary as shown on the drawings. Transformers shall be self-cooled. When transformer is delivering full KVA load continuously, temperature rise shall not exceed 150 degrees C above a 40 degree C ambient with 200 degrees C temperature class insulation system. The average sound level shall not exceed NEMA standards. Transformers shall have four external type taps, two 2-1/2% FCBN and two 2-1/2% FCAN. Windings shall be copper.

C. Transformers rated larger than 112.5KVA shall be provided with Class 155 or higher insulation system and shall be completely enclosed except for ventilating openings. Transformers larger than 112.5KVA shall comply with NEC Article 450.21(B) Exception No. 2, to allow transformers to be installed inside non fire rated rooms.

D. Transformers shall be floor mounted on isolation pads. Enclosure shall be heavy gauge steel with ventilation openings protected against falling dirt and drip, and shall be shielded against actual touching of live parts. A nameplate in accordance with NEMA standards shall be permanently affixed to the enclosure.

G. Approved Manufacturers:

1. Eaton
2. Square D (Schneider Electric)
3. ABB
4. Siemens

PART 3 – EXECUTION

3.1 COORDINATION

A. Contractor shall coordinate all service and distribution work with other crafts on the project.

3.2 TEST AND BALANCING

A. At such times as the Architect directs, the Contractor shall conduct in the Architect's presence operating tests to demonstrate the electrical systems are installed and will operate properly and in accordance with the requirements of the specifications. The Contractor shall furnish instruments and personnel required for such tests. Any work that is found to be defective, or material that are found to vary from the requirements of the drawings or specifications shall be replaced by the Contractor without additional cost of the Owner.

3.3 EMERGENCY CIRCUITS

A. All wiring for emergency power and lighting circuits shall be run in conduits independent of all other circuits or conductors. Emergency circuit installations shall be

made in accordance with National Electrical Code Article 700.9.

3.4 EQUIPMENT FUSING

A. All equipment shall be furnished complete with fuses as described herein and/or as shown on the Drawings. Contractor shall furnish one set of spare fuses for each size fuse furnished on the project. Fuses shall be delivered to Owner prior to acceptance of project.

B. Fusing for protective equipment shall be of the type specifically designed for the intended application. Fuses for service entrance rated equipment shall be Class L. Fuses for branch circuit protection shall be Class RK5 unless specified otherwise. Provide protective fuses as specifically required by the equipment manufacturer.

3.5 INSTALLATION

A. The Electrical Contractor shall place a sign at the Main Switchboard indicating the type and location of the emergency generator in accordance with National Electrical Code Article 702.8(A) requirements.

B. Disconnecting means shall be provided for each motor and motor controller, and shall be located within site from the controller and motor locations in accordance with National Electrical Code Article 430.102 requirements.

END OF SECTION 262000

SECTION 262726 - WIRING DEVICES

PART 1 - GENERAL

1.1 RELATED DOCUMENTS

A. Drawings and general provisions of the Contract, including General and Supplementary Conditions and Division 1 Specification Sections, apply to this Section.

1.2 SUMMARY

A. This Section includes the following:

1. Receptacles, receptacles with integral GFCI, and associated device plates.
2. Tamper-proof receptacles.
3. Twist-locking receptacles.
4. Snap switches and wall-box dimmers.
5. Wall-box motion sensors.
6. Cord and plug sets.
7. Poke-through assemblies, and multioutlet assemblies.

1.3 DEFINITIONS

A. EMI: Electromagnetic interference.

B. GFCI: Ground-fault circuit interrupter.

C. PVC: Polyvinyl chloride.

D. RFI: Radio-frequency interference.

E. TVSS: Transient voltage surge suppressor.

F. UTP: Unshielded twisted pair.

1.4 SUBMITTALS

A. Product Data: For each type of product indicated.

1. Receptacles, switches, plates, floor outlets, poke through assemblies, service poles and multioutlet assemblies.

B. Samples: One for each type of device and wall plate specified, in each color specified.

1.5 QUALITY ASSURANCE

A. Source Limitations: Obtain each type of wiring device through one source from a single manufacturer.

B. Electrical Components, Devices, and Accessories: Listed and labeled as defined in NFPA 70, Article 100, by a testing agency acceptable to authorities having jurisdiction, and marked for intended use.

C. Comply with NFPA 70 latest edition or edition enforced by state or local code authority.

PART 2 - PRODUCTS

2.1 MANUFACTURERS

A. Manufacturers: Subject to compliance with requirements, provide products by one of the following:

1. Receptacles: Duplex 125 V, 20 A:

    a. Hubbell - HBL 5362.
    b. Leviton Mfg. Company Inc.-5362.
    c. Pass & Seymour-CRB5362.
    d. Pass & Seymour -PT5362A (Plug Tail Device).

2. GFI Receptacles: Weather Resistant 125 V, 20 A:

    a. Hubbell Incorporated- BR20WR
    b. Leviton Mfg. Company Inc.-WBR20
    c. Pass & Seymour- WR5362.

3. GFI Receptacles: Weather Resistant and Tamper Resistant 125 V, 20 A:

    a. Hubbell - BR2WRTR.
    b. Leviton Mfg. Company Inc.-TWR20
    c. Pass & Seymour- WR20TR.

4. Receptacles: Tamper Resistant 125 V, 20 A:

    a. Hubbell - BR20TR.
    b. Leviton Mfg. Company Inc.-TWR20
    c. Pass & Seymour- TR5362.

5. Switches-Single Pole:

    a. Hubbell- HBL 1221.
    b. Pass & Seymour - PS20AC1.
    c. Leviton Mfg. Company, Inc.- 1221-1

6. Switches-Three Pole:

    a. Hubbell- HBL1223

b. Leviton Mfg. Company, Inc.-1223-2.
c. Pass & Seymour-PS20AC3.

7. Switches – Occupancy Sensor Wall Type:

a. Hubbell - LH-MT
b. Leviton - OD15-ID
c. Sensor Switch - WSD-PD
d. Watt Stopper - WA-200

8. Switches – Key Operated / Security Switches:

a. Hubbell - HBL1221RKL.
b. Leviton - 1221-2KL
c. Pass & Seymour - PS20AC1-KL.

9. Dimmer Switches Line Voltage:

a. Lutron Nova T
b. Pass & Seymour CD2000
* Dimmer must be compatible with Ballast or LED Driver.

10. Dimmer Switches 0-10V:

a. Synergy ISD
b. Cooper SF10P
* Dimmer must be compatible with Ballast or LED Driver.

2.2 RECEPTACLES

A. Straight-Blade-Type Receptacles: Comply with UL 498, 20 amp.

B. Straight-Blade and Locking Receptacles: Heavy-Duty grade 20 amp.

C. GFCI Receptacles: Straight blade, feed-through type, Heavy-Duty grade, with integral NEMA WD 6, Configuration 5-20R duplex receptacle; complying with UL 498 and UL 943. Design units for installation in a 2-3/4-inch- (70-mm-) deep outlet box without an adapter.

D. Tamper resistant in all public areas.

2.3 CORD AND PLUG SETS

A. Description: Match voltage and current ratings and number of conductors to requirements of equipment being connected.

1. Cord: Rubber-insulated, stranded-copper conductors, with Type SOW-A jacket; with green-insulated grounding conductor and equipment-rating ampacity plus a minimum of 30 percent.
2. Plug: Nylon body and integral cable-clamping jaws. Match cord and receptacle

type for connection.

2.4 SWITCHES

A. Single- and Double-Pole Switches: Comply with UL 20, 20 amp.

B. Snap Switches: Heavy-Duty grade, quiet type 20 amp, 120/277 volt.

C. Live Voltage Dimmer: 120V, 2000 watt, slide to-off. Dimmer must be compatible with ballast or driver.

D. 0-10V Dimmer: 120/277VAC, capable of three way, max wattage 1200 w 120VAC, 150000 277 VAC, Dimmer must be compatible with ballast or driver. 100% to 1% continuous.

2.5 WALL PLATES

A. Single and combination types to match corresponding wiring devices.

1. Plate-Securing Screws: Metal with head color to match plate finish.
2. Material for Finished Spaces: As selected by Architect.
3. Material for Unfinished Spaces: Galvanized steel.
4. Material for Wet Locations: Cast aluminum with spring-loaded lift cover, and listed and labeled for use in "wet locations."

B. Wet-Location, Weatherproof Cover Plates:

1. NEMA 250, complying with type 3R weather-resistant while-in-use metalor impact-resistant thermoplastic with lockable cover; non-removable gasket between the mounting plate/base and cover; stainless steel hinges and mounting hardware

2.6 POKE-THROUGH ASSEMBLIES

A. Description: Factory-fabricated and -wired assembly of below-floor junction box with multichanneled, through-floor raceway/firestop unit and detachable matching floor service outlet assembly.

1. Service Outlet Assembly: Flush type with four simplex receptacles and space for four RJ-45 jacks.
2. Size: Selected to fit cored holes in floor and matched to floor thickness.
3. Fire Rating: Unit is listed and labeled for fire rating of floor-ceiling assembly.
4. Wiring Raceways and Compartments: For a minimum of four No. 12 AWG conductors; and a minimum of four, 4-pair, Category 6 voice and data communication cables.

2.7 SPECIAL CONFIGURATION & TWIST-LOCKING RECEPTACLES

A. General: NEMA and Non-NEMA configurations as indicated on Drawings.

1. Comply with NEMA WD 1, NEMA WD 6; and UL 498.
2. Manufacturers: Subject to compliance with requirements, provide products by one of the following:

    a. Hubbell
    b. Leviton
    c. Pass & Seymour

2.8 MULTIOUTLET ASSEMBLIES

A. Manufacturers: Subject to compliance with requirements, provide products by one of the following:

1. Hubbell Incorporated; Wiring Device-Kellems.
2. Wiremold Company

B. Components of Assemblies: Products from a single manufacturer designed for use as a complete, matching assembly of raceways and receptacles. Power receptacles meeting the requirements for receptacles listed in this section above, unless otherwise indicated.

C. Raceway Material: As indicated on Drawings.

D. Finish: As selected by Architect

E. Wire: No. 12 AWG, unless otherwise noted.

F. Power Receptacle:Devices as indicated on Drawings

G. Voice and Data Communication Outlet: Devices as Indicated on Drawings.

2.9 FINISHES

A. Color:

1. Wiring Devices Connected to Normal Power System: As selected by Architect, unless otherwise indicated or required by NFPA 70.2.
2. Wiring Devices Connected to Emergency Power System: Red.

PART 3 - EXECUTION

3.1 INSTALLATION

A. Install devices and assemblies level, plumb, and square with building lines.

B. Arrangement of Devices: Unless otherwise indicated, mount flush, with long dimension vertical, and with grounding terminal of receptacles on top. Group adjacent switches under single, multigang wall plates.

C. Remove wall plates and protect devices and assemblies during painting.

D. Adjust locations of floor service outlets and service poles to suit arrangement of partitions and furnishings.

E. Install weather resistant receptacles in damp and wet locations per N.E.C. requirements.

F. Mounting Heights: Comply with applicable codes and requirements of Authorities Having Jurisdiction. Mount devices as indicated on Drawings, including but not limited to Architectural elevations. Coordinate all above counter receptacles with backsplash to avoid interferences. All dimensions are given to centerline of box above finished floor (AFF), unless otherwise indicated.

G. Device Plates and Covers:

1. Do not use oversized or extra-deep plates.
2. Repair wall finishes and remount outlet boxes when standard device plates do not fit flush or do not cover rough wall opening.
3. Install weather-proof-while-in-use covers over receptacles in wet, damp and exterior locations.
4. Group adjacent devices under single, multigang wall plates.

H. Floor Service Outlets, Service Poles and Poke-Thru Device

1. Adjust locations of floor service outlets, service poles, and Poke-Thru devices to suit arrangement of partitions and furnishings. Coordinate revised location with Structural Engineer.

3.2 APPLICATION

A. GFCI Receptacles: Install in locations as indicated but in no case less than those listed below:

1. Where device is located on the exterior of the building, provide with Wet-Location Weatherproof Cover Plate.
2. Where device is located within kitchen.
3. Where device is located within a garage.
4. Where device is located in an elevator pit.
5. Where device is located within 6 feet (2-m) of a lavatory or sink, except where located on patient headwall.

B. Tamper-Resistant Receptacles: Install in locations as indicated but in no case less than those listed below:

1. Public Lobbies.
2. Waiting Rooms.

3.3 CONNECTIONS

A. Ground equipment according to Division 26 Section "Grounding and Bonding."

B. Connect wiring according to Division 26 Section "Conductors and Cables."

C. Tighten electrical connectors and terminals according to manufacturer's published torque- tightening values.

3.4 FIELD QUALITY CONTROL

A. Perform the following field tests and inspections and prepare test reports:

1. After installing wiring devices and after electrical circuitry has been energized, test for proper polarity, ground continuity, and compliance with requirements.
2. Test GFCI operation with both local and remote fault simulations according to manufacturer's written instructions.

B. Remove malfunctioning units, replace with new units, and retest as specified above.

3.5 CLEANING

A. On completion of wall plate installation, inspect exterior surfaces and perform the following:

1. Remove paint splatters and other spots.
2. Remove all temporary markings and labels.
3. Replace cracked or damaged wall plates.
4. Wipe down all wall plates with approve cleaning agent to remove fingerprints and dust.

END OF SECTION 262726

SECTION 263213 - NATURAL GAS GENERATOR SETS – IN PROGRESS

PART 1 - GENERAL

1.1 RELATED DOCUMENTS

A. Drawings and general provisions of the Contract, including General Conditions and Division 01 Specification Sections, apply to this Section.

1.2 SUMMARY

1.3 DEFINITIONS

A. Emergency Standby Power (ESP): Per ISO 8528: The maximum power available during a variable electrical power sequence, under the stated operating conditions, for which a generating set is capable of delivering in the event of a utility power outage or under test conditions for up to 200 hours of operation per year with the maintenance intervals and procedures being carried out as prescribed by the manufacturers. The permissible average power output (Ppp) over 24 hours of operation shall not exceed 70 percent of the ESP unless otherwise agreed by the RIC engine manufacturer.

B. Operational Bandwidth: The total variation from the lowest to highest value of a parameter over the range of conditions indicated, expressed as a percentage of the nominal value of the parameter.

1.4 ACTION SUBMITTALS

A. Product Data: For each type of packaged engine generator indicated. Include rated capacities, operating characteristics, and furnished specialties and accessories. In addition, include the following:

1. Thermal damage curve for generator.
2. Time-current characteristic curves for generator protective device.
3. Sound test data, based on a free field requirement.

B. Shop Drawings: Detail equipment assemblies and indicate dimensions, weights, and location and size of each field connection.

1. Dimensioned outline plan and elevation drawings of engine-generator set and other components specified.
2. Wiring Diagrams: Control interconnection, Customer connections.

C. Certifications:

1. Submit statement of compliance which states the proposed product(s) is certified to the emissions standards required by the location for EPA, stationary emergency application.

1.5 INFORMATIONAL SUBMITTALS

A. Source quality-control test reports.

1. Certified summary of prototype-unit test report. See requirements in Part 2 "Source Quality Control" Article Part A. Include statement indicating torsional compatibility of components.
2. Certified Test Report: Provide certified test report documenting factory test per the requirements of this specification, as well as certified factory test of generator set sensors per NFPA110 level 1.
3. List of factory tests to be performed on units to be shipped for this Project.
4. Report of exhaust emissions and compliance statement certifying compliance with applicable regulations.

B. Warranty:

1. Submit manufacturer's warranty statement to be provided for this Project.

1.6 QUALITY ASSURANCE

A. Installer Qualifications: Manufacturer's authorized representative who is trained and approved for installation of units required for this Project.

B. Manufacturer Qualifications: A qualified manufacturer. Maintain, within 100 miles of Project site, a service center capable of providing training, parts, and emergency maintenance repairs.

C. Source Limitations: Obtain packaged generator sets and auxiliary components through one source from a single manufacturer.

D. Comply with NFPA 37 (Standard For the Installation and Use of Stationary Combustion Engines and Gas Turbines).

E. Comply with NFPA 70 (National Electrical Code. Equipment shall be suitable for use in systems in compliance to Article 700, 701, and 702).

F. Comply with NFPA 110 (Emergency and Standby Power Systems) requirements for Level 1 emergency power supply system.

G. Comply with UL 2200.

1.7 PROJECT CONDITIONS

A. Environmental Conditions: Engine-generator system shall withstand the following environmental conditions without mechanical or electrical damage or degradation of performance capability:

1. Ambient Temperature: 4.44 deg C (40.0 deg F) to 51.11 deg C (124.0 deg F).
2. Relative Humidity: 0 to 95 percent.
3. Altitude: Sea level to 60.0 feet (18.29 m).

1.8 WARRANTY

A. Base Warranty: Manufacturer shall provide base warranty coverage on the material and workmanship of the generator set for a minimum of twenty-four (24) months for Standby product and twelve (12) months for Prime/Continuous product from registered commissioning and start-up.

B. Extended Warranty: Manufacturer shall offer extend coverage of 5 years from date of registered commissioning and start-up.

PART 2 - PRODUCTS

2.1 MANUFACTURERS

A. Manufacturers: The basis for this specification is Cummins Power Generation equipment, approved equals may be considered if equipment performance is shown to meet the requirements herein.

2.2 ENGINE-GENERATOR SET

A. Factory-assembled and -tested, engine-generator set.

B. Mounting Frame: Maintain alignment of mounted components without depending on concrete foundation; and have lifting attachments.

1. Rigging Information: Indicate location of each lifting attachment, generator-set center of gravity, and total package weight in submittal drawings.

C. Capacities and Characteristics:

1. Power Output Ratings: Electrical output power rating for Standby operation of not less than 000.0, at 80 percent lagging power factor, 277/480, Series Wye, Three phase, 4 -wire, 60 hertz. Output breaker rating shall be: 150A/3P
2. Nameplates: For each major system component to identify manufacturer's name and address, and model and serial number of component. The engine-generator nameplate shall include information of the power output rating of the equipment.

D. Generator-Set Performance:

1. Steady-State Voltage Operational Bandwidth: 1.0 percent of rated output voltage from no load to full load.
2. Transient Voltage Performance: Not more than 10 percent variation for 50 percent step-load increase or decrease. Voltage shall recover and remain within the steady-state operating band within 0.5 seconds.
3. Steady-State Frequency Operational Bandwidth: 0.25 percent of rated frequency from no load to full load.
4. Steady-State Frequency Stability: When system is operating at any constant load within the rated load, there shall be no random speed variations outside the steady-state operational band and no hunting or surging of speed.
5. Transient Frequency Performance: Not more than 10 percent variation for 50 percent step-load increase or decrease. Frequency shall recover and remain within the steady-state operating band within 3 seconds.

6. Output Waveform: At full load, harmonic content measured line to line or line to neutral shall not exceed 2 percent total with no slot ripple. Telephone influence factor, determined according to NEMA MG 1, shall not exceed 50.
7. Sustained Short-Circuit Current: For a 3-phase, bolted short circuit at system output terminals, system shall supply a minimum of 300 percent of rated full-load current for not less than 10 seconds without damage to generator system components. For a 1-phase, bolted short circuit at system output terminals, system shall regulate both voltage and current to prevent over-voltage conditions on the non-faulted phases.
8. Start Time: Comply with NFPA 110, Level 1, Type 10, system requirements.
9. Ambient Condition Performance: Engine generator shall be designed to allow operation at full rated load in an ambient temperature under site conditions, based on highest ambient condition. Ambient temperature shall be as measured at the air inlet to the engine generator for enclosed units, and at the control of the engine generator for machines installed in equipment rooms.

2.3 ENGINE

A. Fuel: Natural Gas

B. Rated Engine Speed: 1800RPM.

C. Lubrication System: The following items are mounted on engine or skid:

1. Lube oil pump: shall be positive displacement, mechanical, full pressure pump.
2. Filter and Strainer: Provided by the engine manufacturer of record to provide adequate filtration for the prime mover to be used.
3. Crankcase Drain: Arranged for complete gravity drainage to an easily removable container with no disassembly and without use of pumps, siphons, special tools, or appliances.

D. Coolant Jacket Heater: Electric-immersion type, factory installed in coolant jacket system. Comply with NFPA 110 requirements for Level 1 equipment for heater capacity and performance.

1. Designed for operation on a single 120 VAC, single phase, 60Hz power connection. Heater voltage shall be shown on the project drawings.
2. Installed with isolation valves to isolate the heater for replacement of the element without draining the engine cooling system or significant coolant loss.
3. Provided with a 24VDC thermostat, installed at the engine thermostat housing

E. Governor: Adjustable isochronous, with speed sensing. The governing system dynamic capabilities shall be controlled as a function of engine coolant temperature to provide fast, stable operation at varying engine operating temperature conditions. The control system shall actively control the fuel rate as appropriate to the state of the engine generator. Fuel rate shall be regulated as a function of starting, accelerating to start disconnect speed, accelerating to rated speed, and operating in various isochronous states.

F. Cooling System: Closed loop, liquid cooled

1. The generator set manufacturer shall provide prototype test data for the specific hardware proposed demonstrating that the machine will operate at rated standby load in an outdoor ambient condition of 40 deg C.
2. Coolant: Solution of 50 percent ethylene-glycol-based antifreeze and 50 percent water, with anticorrosion additives as recommended by engine manufacturer.
3. Size of Radiator overflow tank: Adequate to contain expansion of total system coolant from cold start to 110 percent load condition.
4. Expansion Tank: Constructed of welded steel plate and rated to withstand maximum closed-loop coolant system pressure for engine used. Equip with gage glass and petcock.
5. Temperature Control: Self-contained, thermostatic-control valve modulates coolant flow automatically to maintain optimum constant coolant temperature as recommended by engine manufacturer.
6. Duct Flange: Generator sets installed indoors shall be provided with a flexible radiator duct adapter flange.

G. Muffler/Silencer: Selected with performance as required to meet sound requirements of the application, sized as recommended by engine manufacturer and selected with exhaust piping system to not exceed engine manufacturer's engine backpressure requirements. For generator sets with outdoor enclosures the silencer shall be inside the enclosure.

H. Air-Intake Filter: Engine-mounted air cleaner with replaceable dry-filter element and restriction indicator.

I. Starting System: 12 or 24V, as recommended by the engine manufacturer; electric, with negative ground.

1. Components: Sized so they will not be damaged during a full engine-cranking cycle with ambient temperature at maximum specified in Part 1 "Project Conditions" Article.
2. Cranking Cycle: As required by NFPA 110 for level 1 systems.
3. Battery Cable: Size as recommended by engine manufacturer for cable length as required. Include required interconnecting conductors and connection accessories.
4. Battery Compartment: Factory fabricated of metal with acid-resistant finish.
5. Battery-Charging Alternator: Factory mounted on engine with solid-state voltage regulation. The battery charging alternator shall have sufficient capacity to recharge the batteries with all parasitic loads connected within 4 hours after a normal engine starting sequence.
6. Battery Chargers: Unit shall comply with UL 1236, provide fully regulated, constant voltage, current limited, battery charger for each battery bank. It will include the following features:

    a. Operation: Equalizing-charging rate based on generator set manufacturer's recommendations shall be initiated automatically after battery has lost charge until an adjustable equalizing voltage is achieved at battery terminals. Unit shall then be automatically switched to a lower float-charging mode and shall continue to operate in that mode until battery is discharged again.
    b. Automatic Temperature Compensation: Adjust float and equalize voltages for variations in ambient temperature from minus 20 deg C to plus 40 deg C to prevent overcharging at high temperatures and undercharging at low temperatures.

c. Automatic Voltage Regulation: Maintain constant output voltage regardless of input voltage variations up to plus or minus 10 percent.
d. Safety Functions: Sense abnormally low battery voltage and close contacts providing low battery voltage indication on control and monitoring panel. Sense high battery voltage and loss of ac input or dc output of battery charger. Either condition shall close contacts that provide a battery-charger malfunction indication at system control and monitoring panel.
e. Provide LED indication of general charger condition, including charging, faults, and modes. Provide a LCD display to indicate charge rate and battery voltage. Charger shall provide relay contacts for fault conditions as required by NFPA110.
f. Enclosure and Mounting: NEMA, Type 1, wall-mounted cabinet.

2.4 CONTROL AND MONITORING

A. Engine generator control shall be microprocessor based and provide automatic starting, monitoring, protection and control functions for the unit.

B. Automatic Starting System Sequence of Operation: When mode-selector switch on the control and monitoring panel is in the automatic position, remote-control contacts in one or more separate automatic transfer switches initiate starting and stopping of generator set. When mode-selector switch is switched to the on position, generator set starts. The off position of same switch initiates generator-set shutdown. (Switches with different configurations but equal functions are acceptable.) When generator set is running, specified system or equipment failures or derangements automatically shut down generator set and initiate alarms. Operation of the local (generator set-mounted) and/or remote emergency-stop switch also shuts down generator set.

C. Manual Starting System Sequence of Operation: Switching on-off switch on the generator control panel to the on position starts generator set. The off position of same switch initiates generator-set shutdown. When generator set is running, specified system or equipment failures or derangements automatically shut down generator set and initiate alarms. Operation of the local (generator set-mounted) and/or remote emergency-stop switch also shuts down generator set.

D. Configuration: Operating and safety indications, protective devices, system controls, engine gages and associated equipment shall be grouped in a common control and monitoring panel. Mounting method shall isolate the control panel from generator-set vibration. AC output power circuit breakers and other output power equipment shall not be mounted in the control enclosure.

E. Indicating and Protective Devices and Controls: As required by NFPA 110 for Level 1 system, and the following:

1. AC voltmeter (3-phase, line to line and line to neutral values).
2. AC ammeter (3-phases).
3. AC frequency meter.
4. AC kVA output (total and for each phase). Display shall indicate power flow direction.
5. Ammeter-voltmeter displays shall simultaneously display conditions for all three phases.
6. Emergency Stop Switch: Switch shall be a red "mushroom head" pushbutton device complete with lock-out/tag-out provisions. Depressing switch shall

cause the generator set to immediately stop the generator set and prevent it from operating.

7. Fault Reset Switch: Supply a dedicated control switch to reset/clear fault conditions.
8. DC voltmeter (alternator battery charging).
9. Engine-coolant temperature gage.
10. Engine lubricating-oil pressure gage.
11. Running-time meter.
12. Generator-voltage and frequency digital raise/lower switches. Rheostats for these functions are not acceptable. The control shall adjustment of these parameters in a range of plus or minus 5% of the voltage and frequency operating set point (not nominal voltage and frequency values.)
13. AC Protective Equipment: The control system shall include over/under voltage, over current, short circuit, loss of voltage reference, and over excitation shut down protection. There shall be an overload warning, and overcurrent warning alarm.
14. Status LED indicating lamps to indicate remote start signal present at the control, existing alarm condition, not in auto, and generator set running.
15. A graphical display panel with appropriate navigation devices shall be provided to view all information noted above, as well as all engine status and alarm/shutdown conditions (including those from an integrated engine emission control system). The display shall also include integrated provisions for adjustment of the gain and stability settings for the governing and voltage regulation systems.
16. Panel lighting system to allow viewing and operation of the control when the generator room or enclosure is not lighted.
17. DC control Power Monitoring: The control system shall continuously monitor DC power supply to the control, and annunciate low or high voltage conditions. It shall also provide an alarm indicating imminent failure of the battery bank based on degraded voltage recover on loading (engine cranking).

F. Remote Alarm Annunciator: Comply with NFPA 110. An LED labeled with proper alarm conditions shall identify each alarm event and a common audible signal shall sound for each alarm condition.

G. Remote Emergency-Stop Switch: Flush; wall mounted, unless otherwise indicated; and labeled. Push button shall be protected from accidental operation.

2.5 GENERATOR OVERCURRENT AND FAULT PROTECTION

A. Generator Overcurrent Protection: The generator set shall be provided with a UL Listed/CSA Certified protective device that is coordinated with the alternator provided to prevent damage to the generator set on any possible overload or overcurrent condition external to the machine. The protective device shall be listed as a utility grade protective device under UL category NRGU. The control system shall be subject to UL follow-up service at the manufacturing location to verify that the protective system is fully operational as manufactured. Protector shall perform the following functions:

1. Initiates a generator kW overload alarm when generator has operated at an overload equivalent to 110 percent of full-rated load for 60 seconds. Indication for this alarm is integrated with other generator-set malfunction alarms.

2. Under single phase or multiple phase fault conditions, or on overload conditions, indicates an alarm conditions when the current flow is in excess of 110% of rated current for more than 10 seconds.
3. Under single phase or multiple phase fault conditions, operates to switch off alternator excitation at the appropriate time to prevent damage to the alternator.
4. The operator panel shall indicate the nature of the fault condition as either a short circuit or an overload.
5. Senses clearing of a fault by other overcurrent devices and controls recovery of rated voltage to avoid overshoot greater than 120% of nominal voltage.
6. The protective system provided shall not include an instantaneous trip function.

2.6 GENERATOR, EXCITER, AND VOLTAGE REGULATOR

A. Comply with NEMA MG 1.

B. Drive: Generator shaft shall be directly connected to engine shaft. Exciter shall be rotated integrally with generator rotor.

C. Electrical Insulation: Class H

D. Temperature Rise: 105 / Class F environment.

E. Construction shall prevent mechanical, electrical, and thermal damage due to vibration, over speed up to 125 percent of rating, and heat during operation at 110 percent of rated capacity.

F. Permanent Magnet Generator (PMG) shall provide excitation power for optimum motor starting and short circuit performance.

G. Enclosure: Drip-proof.

H. Voltage Regulator: Solid-state type, separate from exciter, providing performance as specified. The voltage regulation system shall be microprocessor-controlled, 3-phase true RMS sensing, full wave rectified, and provide a pulse-width modulated signal to the exciter. No exceptions or deviations to these requirements will be permitted.

I. Windings: Two-thirds pitch stator winding and fully linked amortisseur winding.

J. Subtransient Reactance: 12 percent maximum, based on the rating of the engine generator set.

2.7 OUTDOOR GENERATOR-SET ENCLOSURE

A. Description: Sound Attenuated Aluminum housing. Multiple panels shall be lockable and provide adequate access to components requiring maintenance. Instruments, control, and battery system shall be mounted within enclosure.

B. Construction:

1. Louvers: Equipped with bird screen to permit air circulation when engine is not running while excluding birds and rodents.

2. Hinged Doors: With padlocking provisions. Restraint/Hold back hardware to prevent door to keep door open at 180 degrees during maintenance. Rain lips over all doors.
3. Exhaust System:
   a. Muffler Location: Within enclosure.
4. Hardware: All hardware and hinges shall be stainless steel.
5. Wind Rating: Wind rating shall be 150 mph
6. Mounting Base: Suitable for mounting on sub-base fuel tank or housekeeping pad.
7. A weather protective enclosure shall be provided which allows the generator set to operate at full rated load with a static pressure drop equal to or less than 0.5 inches of water.
8. Inlet ducts shall include rain hoods

C. Engine Cooling Airflow through Enclosure: Housing shall provide ample airflow for engine generator operation at rated load in an ambient temperature of 40 deg C.

D. Sound Performance: Reduce the sound level of the engine generator while operating at full rated load to a maximum of 73.4 dBA measured at any location 23 ft from the engine generator in a free field environment.

E. Site Provisions:

1. Lifting: Complete assembly of engine generator, enclosure shall be designed to be lifted into place as a single unit, using spreader bars.

2.8 VIBRATION ISOLATION DEVICES

A. Vibration Isolation: Generators installed on grade shall be provided with elastomeric isolator pads integral to the generator, unless the engine manufacturer requires use of spring isolation.

1. IBC Compliance: Isolators complying with IBC requirements shall be specified in the equipment documentation, as well as the installation requirements for the unit.

2.9 FINISHES

A. Indoor and Outdoor Enclosures and Components: Powder-coated and baked over corrosion-resistant pretreatment and compatible primer. Manufacturer's standard color or as directed on the drawings.

2.10 SOURCE QUALITY CONTROL

A. Prototype Testing: Factory test engine-generator set using same engine model, constructed of identical or equivalent components and equipped with identical or equivalent accessories.

1. Tests: Comply with NFPA 110, Level 1 Energy Converters. In addition, the equipment engine, skid, cooling system, and alternator shall have been subjected to actual prototype tests to validate the capability of the design under the abnormal conditions noted in NFPA110. Calculations and testing

on similar equipment which are allowed under NFPA110 are not sufficient to meet this requirement.

B. Project-Specific Equipment Tests: Before shipment, factory test engine-generator set manufactured specifically for this Project. Perform tests at rated load and power factor. Include the following tests:

1. Test engine generator set manufactured for this Project to demonstrate compatibility and functionality.
2. Full load run.
3. Maximum power.
4. Voltage regulation.
5. Steady-state governing.
6. Single-step load pickup.
7. Simulated safety shutdowns.
8. Provide 14 days' advance notice of tests and opportunity for observation of tests by Owner's representative.

PART 3 - EXECUTION

3.1 INSTALLATION

A. Comply with packaged engine-generator manufacturers' written installation, application, and alignment instructions and with NFPA 110.

B. Equipment shall be installed by the contractor in accordance with final submittals and contract documents. Installation shall comply with applicable state and local codes as required by the authority having jurisdiction. Install equipment in accordance with manufacturer's instructions and instructions included in the listing or labeling of UL listed products.

C. Installation of equipment shall include furnishing and installing all interconnecting wiring between all major equipment provided for the on-site power system. The contractor shall also perform interconnecting wiring between equipment sections (when required), under the supervision of the equipment supplier.

D. Contractor shall coordinate remote pushbutton location (when required) with engineer prior to installation. Provide allowance for 75' of conduit and required cabling unless otherwise located on plans.

E. Contractor shall provide all interconnections and conduit between generator and remote annunciator including conduit and cabling.

F. Equipment shall be installed on concrete housekeeping pads. Equipment shall be permanently fastened to the pad in accordance with manufacturer's instructions and seismic requirements of the site.

G. Equipment shall be initially started and operated by representatives of the manufacturer. All protective settings shall be adjusted as instructed by the consulting engineer.

H. All equipment shall be physically inspected for damage. Scratches and other installation damage shall be repaired prior to final system testing. Equipment shall

be thoroughly cleaned to remove all dirt and construction debris prior to initial operation and final testing of the system.

I. On completion of the installation by the electrical contractor, the generator set supplier shall conduct a site evaluation to verify that the equipment is installed per manufacturer's recommended practice.

3.2 ON-SITE ACCEPTANCE TEST

A. The complete installation shall be tested to verify compliance with the performance requirements of this specification following completion of all site work. Testing shall be conducted by representatives of the manufacturer, with required fuel supplied by Contractor. The Engineer shall be notified in advance and shall have the option to witness the tests. The generator set manufacturer shall provide a site test specification covering the entire system. Tests shall include:

B. Prior to start of active testing, all field connections for wiring, power conductors, and bus bar connections shall be checked for proper tightening torque.

C. Installation acceptance tests to be conducted on site shall include a "cold start" test, a two hour full load (resistive) test, and a one-step rated load pickup test in accordance with NFPA 110. Provide a resistive load bank and make temporary connections for full load test, if necessary.

D. Perform a power failure test on the entire installed system. This test shall be conducted by opening the power supply from the utility service, and observing proper operation of the system for at least 2 hours. Coordinate timing and obtain approval for start of test with site personnel.

3.3 TRAINING

A. The equipment supplier shall provide training for the facility operating personnel covering operation and maintenance of the equipment provided. The training program shall be not less than 4 hours in duration and the class size shall be limited to 5 persons. Training date shall be coordinated with the facility owner.

3.4 FIELD QUALITY CONTROL

A. Manufacturer's Field Service: Engage a factory-authorized service representative to inspect components, assemblies, and equipment installations, including connections, and to assist in testing.

3.5 SERVICE AND SUPPORT

A. The generator set supplier shall maintain service parts inventory for the entire power system at a central location which is accessible to the service location 24 hours per day, 365 days per year. The inventory shall have a commercial value of $3 million or more. The manufacturer of the generator set shall maintain a central parts inventory to support the supplier, covering all the major components of the power system, including engines, alternators, control systems, paralleling electronics, and power transfer equipment.

B. The generator set shall be serviced by a local service organization that is trained and factory certified in generator set service. The supplier shall maintain an inventory of critical power system replacement parts in the local service location. Service vehicles shall be stocked with critical replacement parts. The service organization shall be on call 24 hours per day, 365 days per year. The service organization shall be physically located within 100 miles of the site.

C. The manufacturer shall maintain model and serial number records of each generator set provided for at least 20 years.

END OF SECTION 263213

SECTION 263600 - AUTOMATIC TRANSFER SWITCHES

PART 1 - GENERAL

1.1 RELATED DOCUMENTS

A. Drawings and general provisions of the Contract, including General and Supplementary Conditions and Division 01 Specification Sections, apply to this Section.

1.2 SUMMARY

A. This Section includes transfer switches rated 600 V and less, including the following:

1. Automatic transfer switches
2. Remote annunciation systems

B. Related Sections include the following:

1.3 SUBMITTALS

A. Product Data: For each type of product indicated. Include rated capacities, weights, operating characteristics, furnished specialties, and accessories.

1. Technical data on all major components of all transfer switches and other products described in this section. Data is required for the transfer switch mechanism, control system, cabinet, and protective devices specifically listed for use with each transfer switch. Include steady state and fault current ratings, weights, operating characteristics, and furnished specialties and accessories.
2. Single Line Diagram: Show connections between transfer switch, power sources and load.

B. Shop Drawings: Dimensioned plans, elevations, sections, and details showing minimum clearances, conductor entry provisions, gutter space, installed features and devices, and material lists for each switch specified.

1. Dimensioned outline drawings of assembly, including elevations, sections, and details including minimal clearances, conductor entry provisions, gutter space, installed features and devices and material lists for each switch specified.
2. Internal electrical wiring and control drawings.
3. Interconnection wiring diagrams, showing recommended conduit runs and point-to-point terminal connections to generator set.
4. Installation and mounting instructions, including information for proper installation of equipment to meet seismic requirements.

C. Manufacturer and Supplier Qualification Data

1. The transfer switch manufacturer shall be certified to ISO 9001 International Quality Standard and shall have third party certification verifying quality

assurance in design/development, production, installation, and service, in accordance with ISO 9001.

2. The manufacturer of this equipment shall have produced similar equipment for a minimum period of 10 years. When requested, an acceptable list of installations with similar equipment shall be provided demonstrating compliance with this requirement.

D. Operation and Maintenance Data: For each type of product to include in emergency, operation, and maintenance manuals. In addition to items specified in Division 01 Section "Operation and Maintenance Data," include the following:

1. Features and operating sequences, both automatic and manual.
2. List of all factory settings of relays, timers and protective devices; provide setting and calibration instructions where applicable.

E. Warranty documents demonstrating compliance with the project's contract requirements.

1.4 QUALITY ASSURANCE

A. Manufacturer Qualifications: The equipment supplier shall maintain a service center capable of providing training, parts, maintenance and emergency repairs to equipment, including transfer switch generator sets and remote monitoring equipment (if applicable) at the site within a response period of less than (eight hours or appropriate time period designated for Project) from time of notification.

1. The transfer switch shall be serviced by technicians employed by, and specially trained and certified by, the generator set supplier and the supplier shall have a service organization that is factory-certified in both generator set and transfer switch service. The supplier shall maintain an inventory of critical replacement parts at the local service organization, and in service vehicles. The service organization shall be on call 24 hours per day, 365 days per year.
2. Submit names, experience level, training certifications, and locations for technicians that will be responsible for servicing equipment at this site.
3. The manufacturer shall maintain model and serial number records of each transfer switch provided for at least 20 years.

B. Source Limitations: All transfer switches are to be obtained through one source from a single manufacturer. The generator set manufacturer shall warrant transfer switches to provide a single source of responsibility for products provided.

C. Electrical Components, Devices, and Accessories: Listed and labeled as defined in NFPA 70, Article 100, by a testing agency acceptable to authorities having jurisdiction, and marked as suitable for use in emergency, legally required or optional standby use as appropriate for the connected load.

D. The automatic transfer switch installation and application shall conform to the requirements of the following codes and standards:

1. Transfer switches and enclosures shall be UL 1008 listed and labeled as suitable for use in emergency, legally required, and optional standby applications.
2. CSA 282, Emergency Electrical Power Supply for Buildings, and CSA C22.2, No. 14-M91 Industrial Control Equipment
3. NFPA 70, National Electrical Code. Equipment shall be suitable for use in systems in compliance with Articles 700, 701 and 702.

4. Comply with NEMA ICS 10-1993 AC Automatic Transfer Switches
5. IEEE 446 – Recommended Practice for Emergency and Standby Power Systems for Commercial and Industrial Applications
6. EN55011, Class B Radiated Emissions and Class B Conducted Emissions
7. IEC 1000-4-5 (EN 61000-4-5); AC Surge Immunity
8. IEC 1000-4-4 (EN 61000-4-4) Fast Transients Immunity
9. IEC 1000-4-2 (EN 61000-4-2) Electrostatic Discharge Immunity
10. IEC 1000-4-3 (EN 61000-4-3) Radiated Field Immunity
11. IEC 1000-4-6 Conducted Field Immunity
12. IEC 1000-4-11 Voltage Dip Immunity
13. IEEE 62.41, AC Voltage Surge Immunity
14. IEEE 62.45, AC Voltage Surge Testing

E. Comply with NFPA 110 – Emergency and Standby Power Systems. The transfer switch shall meet all requirements for Level 1 systems, regardless of the actual circuit level.

F. The manufacturer shall warrant the material and workmanship of the transfer switch equipment for a minimum of five (5) year from the warranty start date. The warranty start date is the date of registered commissioning and start up or eighteen (18) months from date of shipment, whichever is sooner.

G. The warranty shall be comprehensive. No deductibles shall be allowed for travel time, service hours, repair parts cost, and etc. during the minimum noted warranty period described above.

1.5 PROJECT CONDITIONS

A. Interruption of Existing Electrical Service: Do not interrupt electrical service to facilities occupied by Owner or others unless permitted under the following conditions and then only after arranging to provide temporary electrical service:

1. Notify Architect/ Owner no fewer than 14 days in advance of proposed interruption of electrical service.
2. Do not proceed with interruption of electrical service without Architect/ Owner's written permission.
3. Do not energize any new service or distribution equipment without notification and permission of the Construction Manager

1.6 COORDINATION

A. Size and location of concrete bases and anchor bolt inserts shall be coordinated. Concrete, reinforcement and formwork must meet the requirements specified in Division 03. See section "INSTALLATION" for additional information on installation

PART 2 - PRODUCTS

2.1 MANUFACTURERS

A. Manufacturers: Subject to compliance with requirements, provide products by one of the following:

1. Cummins Power Generation
2. ASCO
3. Trystar (Docking stations & Manual Transfer Switches)

B. Switches manufactured by other manufacturers that meet the requirement of this specification are acceptable, if approved not less than two weeks before scheduled bid date. Proposals must include a line-by-line compliance statement based on this specification.

C. Transfer switches utilizing molded case circuit breakers do not meet the requirements of this specification and will not be accepted.

2.2 GENERAL TRANSFER-SWITCH PRODUCT REQUIREMENTS

A. Provide transfer switches in the number and ratings that are shown on the drawings.

B. Indicated Current Ratings: Apply as defined in UL 1008 for continuous loading and total system transfer.

C. Fault-Current Closing and Withstand Ratings: UL 1008 WCR ratings must be specifically listed as meeting the requirements for use with protective devices at installation locations, under specified fault conditions. Withstand and closing ratings shall be based on use of the same set of contacts for the withstand test and the closing test.

D. Solid-State Controls: All settings should be accurate to +/- 2% or better over an operating temperature range of - 40 to + 60 degrees C (- 40 to + 140 degrees F).

E. Resistance to Damage by Voltage Transients: Components shall meet or exceed voltage-surge withstand capability requirements when tested according to IEEE C62.41. Components shall meet or exceed voltage-impulse withstand test of NEMA ICS 1.

F. Electrical Operation: Accomplished by a non-fused, momentarily energized solenoid or electric motor operator mechanism, mechanically and electrically interlocked in both directions (except that mechanical interlock is not required for closed transition switches).

G. Switch Characteristics: Designed for continuous-duty repetitive transfer of full-rated current between active power sources.

1. Switches using molded-case switches or circuit breakers, or insulated case circuit breaker components are not acceptable.
2. Transfer switches shall be double-throw, electrically and mechanically interlocked, and mechanically held in the Source 1 and Source 2 positions.
3. Main switch contacts shall be high pressure silver alloy. Contact assemblies shall have arc chutes for positive arc extinguishing. Arc chutes shall have insulating covers to prevent inter-phase flashover.
4. Contacts shall be operated by a high-speed electrical mechanism that causes contacts to open or close within three electrical cycles from signal.
5. Transfer switch shall be provided with flame retardant transparent covers to allow viewing of switch contact operation but prevent direct contact with components that could be operating at line voltage levels.
6. The transfer switch shall include the mechanical and control provisions necessary to allow the device to be field-configured for operating speed.

Transfer switch operation with motor loads shall be as is recommended in NEMA MG1.

a. Phase angle monitoring/timing equipment is not an acceptable substitute for this functionality

7. Transfer switches designated on the drawings as "4-pole" shall be provided with a switched neutral pole switched which is switched simultaneously with phase poles.
8. Transfer switches designated on the drawings as "service entrance" switches shall meet the requirements of section "SERVICE ENTRANCE TRANSFER SWITCHES" of this specification.

H. Control: Transfer switch control shall be capable of communicating with the genset control, other switches and remote programming devices over a high-speed network interface.

I. Factory wiring: Transfer switch internal wiring shall be composed of pre-manufactured harnesses that are permanently marked for source and destination. Harnesses shall be connected to the control system by means of locking disconnect plug(s), to allow the control system to be easily disconnected and serviced without disconnecting power from the transfer switch mechanism

J. Terminals: Terminals shall be pressure type and appropriate for all field wiring. Control wiring shall be equipped with suitable lugs, for connection to terminal strips.

K. Enclosures: All enclosures shall be third-party certified for compliance to NEMA ICS 6 and UL 508, unless otherwise indicated:

1. The enclosure shall provide wire bend space in compliance to the latest version of NFPA70, regardless of the direction from which the conduit enters the enclosure.
2. Exterior cabinet doors shall provide complete protection for the system's internal components. Doors must have permanently mounted key-type latches. Bolted covers or doors are not acceptable.
3. Transfer switches shall be provided in enclosures that are third party certified for their intended environment per NEMA requirements.
4. Indoor transfer switches shall be NEMA-1. Outdoor transfer switches shall be NEMA-3R.

2.3 AUTOMATIC TRANSFER SWITCHES

A. Comply with requirements for Level 1 equipment according to NFPA 110.

B. Indicated current ratings:

1. Refer to the Project drawings for specifications on the sizes and types of transfer switch equipment, withstand and closing ratings, number of poles, voltage and ampere ratings, enclosure type, and accessories.
2. Main contacts shall be rated for 600 VAC minimum.
3. Transfer switches shall be rated to carry 100% of rated current continuously in the enclosure supplied, in ambient temperatures of -40 to +60 degrees C (-40 to +140 degrees F), relative humidity up to 95% (non-condensing), and altitudes up to 10,000 feet (3000 meters).

C. Relay Signal: Control shall include provisions for addition of a pre-transfer relay signal, adjustable from 0 to 60 seconds, to be provided if necessary for elevator operation, based on equipment provided for the project.

D. Control: Transfer switch control shall be provided with necessary equipment and software to communicate with the genset control, other transfer switches, remote annunciation equipment, and other devices over a high speed control network.

E. Neutral Switching: Transfer switches designated on the drawings as 4-pole shall be provided with a switched neutral pole. The neutral pole shall be of the same construction and have the same ratings as the phase poles. All poles shall be switched simultaneously using a common crossbar. Substitute equipment using overlapping neutral contacts is not acceptable.

F. Automatic Transfer Switch Control Features

1. The transfer switch control system shall be configurable in the field for any operating voltage level up to 600 VAC. Voltage sensing shall be monitored based on the normal voltage at the site. Systems that utilize voltage monitoring based on standard voltage conditions that are not field configurable are not acceptable.
2. All transfer switch sensing shall be configurable from an operator panel or from a Windows XP or later PC-based service tool. Designs utilizing DIP switches or other electromechanical devices are not acceptable.
3. The transfer switch shall be configurable to accept a relay contact signal and a network signal from an external device for load shedding purposes. On receipt of this signal, the transfer switch shall switch to a neutral position when connected to Source 2. If Source 1 is available when the load-shed signal is received, the transfer switch shall connect to Source 1.
4. The transfer switch shall be configurable to accept a relay contact signal and a network signal from an external device to prevent transfer to the generator service.
5. The transfer switch shall provide a relay contact signal prior to transfer or re-transfer. The time period before and after transfer shall be adjustable in a range of 0 to 60 seconds.
6. The control system shall be designed and prototype tested for operation in ambient temperatures from - 40 degrees C to + 60 degrees C (- 40 to +140 degrees F). It shall be designed and tested to comply with the requirements of the noted voltage and RFI/EMI standards.
7. The control shall have optically isolated logic inputs, high isolation transformers for AC inputs and relays on all outputs, to provide optimum protection from line voltage surges, RFI and EMI.
8. The transfer switch network monitoring equipment, when supplied, shall be provided with a battery-based auxiliary power supply to allow monitoring of the transfer switch when both AC power sources are non-operational.

G. Transfer Switch Control Panel: The transfer switch shall have a microprocessor-based control with a sealed membrane panel incorporating pushbuttons for operator-controlled functions, and LED lamps for system status indicators. The panel shall also include an alphanumeric display for detailed system information. Panel display and indicating lamps shall include permanent labels.

1. The indicator panel LEDs shall display:

   a. Which source the load is connected to (Source 1 or Source 2)
   b. Which source or sources are available

c. When switch is not set for automatic operation, the control is disabled
d. When the switch is in test/exercise mode

2. The indicator shall have pushbuttons that allow the operator to activate the following functions:

a. Activate pre-programmed test sequence
b. Override programmed delays, and immediately go to the next operation
c. Reset the control by clearing any faults
d. Test all of the LEDs by lighting them simultaneously

3. The alphanumeric digital display shall be vacuum fluorescent-type, clearly visible in both bright sunlight and no-light conditions over an angle of 120 degrees, and shall display the following:

a. AC voltage for all phases, normal and emergency
b. Source status: connected or not connected.
c. Load data, including voltage, AC current, frequency, KW, KVA, and power factor.

4. The display panel shall be password-protected, and allow the operator to view and make adjustments:

a. Set nominal voltage and frequency for the transfer switch
b. Adjust voltage and frequency sensor operation set points
c. Set up time clock functions
d. Set up load sequence functions
e. Enable or disable control functions including program transition
f. View real-time clock data, operation log (hours connected, times transferred, failures) and service history

H. Control Functions: Functions managed by the control shall include:

1. Software adjustable time delays:

a. Engine start (prevents nuisance genset starts in the event of momentary power fluctuation): 0 to 120 seconds (default 3 sec)
b. Transfer normal to emergency (allows genset to stabilize before load is transferred): 0 to 120 seconds (default 3 sec)
c. Re-transfer emergency to normal (allows utility to stabilize before load is transferred from genset): 0 to 30 minutes (default 3 sec)
d. Engine cooldown: 0 to 30 minutes (default 10 min)
e. Programmed transition: 0 to 60 seconds (default 3 sec)

2. Voltage imbalance sensing:

a. Dropout: 2 to 10% (default 4%)
b. Pickup: 90% of dropout
c. Time delay: 2.0 to 20 seconds (default 5 sec)
d. Bar graph meter panel, to display 3-phase AC Amps, 3-phase AC Volts, Hz, KW load level, and load power factor. The display shall be color-coded, with green scale indicating normal or acceptable operating level, yellow indicating conditions nearing a fault, and red indicating operation in excess of rated conditions for the transfer switch.

3. Phase rotation sensing:

    a. Time delay: 100 msec

4. Loss of single-phase detection:

    a. Time delay: 100 msec

I. Control features shall include:

1. Programmable genset exerciser: A field-programmable control shall periodically start and run the generator with or without transferring the load for a preset time period, then re-transfer and shut down the generator after a preset cool-down period.
2. In event of a loss of power to the control, all control settings, real-time clock setting and the engine start-time delay setting will be retained.
3. The system continuously logs information including the number of hours each source has been connected to the load, the number of times transferred, and the total number of times each source has failed. An event recorder stores information, including time and date-stamp, for up to 50 events.
4. Re-Transfer Inhibit Switch: Inhibits automatic re-transfer control so automatic transfer switch will remain connected to emergency power source as long as it is available regardless of condition of normal source.
5. Transfer Inhibit Switch: Inhibits automatic transfer control so automatic transfer switch will remain connected to normal power source regardless of condition of emergency source.

J. Control Interface

1. Provide one set Form C auxiliary contacts on both sides, operated by transfer switch position, rated 10 amps 250 VAC.
2. The transfer switch shall be provided with a network communication card, and configured to allow network-based communication with the transfer switch and other network system components, including the generator set(s) provided for the Project.
3. Unassigned Auxiliary Contacts: Two normally open, 1-pole, double-throw contacts for each switch position, rated 10A at 240 VAC.

K. Engine Starting Contacts

1. One isolated and normally closed pair of contacts rated 10A at 32 VDC minimum.

2.4 REMOTE ANNUNCIATOR SYSTEM

A. Functional Description: Remote annunciator panel shall annunciate conditions for indicated transfer switches. Annunciation shall include the following:

1. Sources available, as defined by actual pickup and dropout settings of transfer-switch controls.
2. Switch position.
3. Switch in test mode.
4. Failure of communication link.

B. Annunciator Panel: LED-lamp type with audible signal and silencing switch.

1. Indicating Lights: Grouped for each transfer switch monitored.
2. Label each group, indicating transfer switch it monitors, location of switch, and identity of load it serves.
3. Switch in test mode.
4. Lamp Test: Push-to-test or lamp-test switch on front panel.

C. Malfunction of annunciator or communication link shall not affect functions of automatic transfer switch. In the event of failure of communication link, automatic transfer switch automatically reverts to stand-alone, self-contained operation.

D. Automatic transfer-switch sensing, controlling, or operating function shall not depend on remote panel for proper operation. The remote annunciation system shall not prevent transfer to the alternate source when the primary power source fails, nor prevent return to the primary source if the alternate source fails

2.5 MANUAL TRANSFER SWITCHES (MTS)

A. The transfer switch unit shall be manually operated and mechanically held. The switch shall be mechanically interlocked to ensure only one of three possible positions, Source 1, Source 2, or Center Off Fused disconnect type switches shall not be acceptable.

B. The switch shall be positively locked and unaffected by momentary outages so that contact pressure is maintained at a constant value and temperature rise at the contacts is minimized for maximum reliability and operating life.

C. All main contacts shall be silver composition. Switches rated 600 amperes and above shall have segmented blow-on construction for high withstand current capability and be protected by separate arcing contacts.

D. Inspection of all contacts shall be possible from the front of the switch without disassembly of operating linkages and without disconnection of power conductors.

E. Designs utilizing components of molded-case circuit breakers, contactors, or parts thereof which are not intended for continuous duty, repetitive switching or transfer between two active power sources are not acceptable.

F. Where neutral conductors must be switched, the MTS shall be provided with fully-rated neutral transfer contacts.

G. Where neutral conductors are to be solidly connected, a neutral terminal plate with fully-rated AL-CU pressure connectors shall be provided.

H. The MTS shall be tested in accordance with UL 1008 for transfer switches. Switch ratings of 260 amperes and less shall have endurance rating of 6000 cycles, 400 ampere shall have endurance rating of 4000 cycles, and 600 – 1200 ampere shall have endurance rating of 3000 cycles.

I. Operation:

1. The transfer switch shall be arranged for manually actuated manual operation.
2. The manual transfer shall be actuated via a mechanical operating mechanism.

3. The manual operating handle shall be capable of external operation without opening the enclosure door.
4. It shall have the same contact to contact speed as automatic operation
5. There shall be three positions for manual operation:

    a. Connected to Source 1 (preferred)
    b. Connected to Source 2 (alternate)
    c. Connect to center off (disconnected position)

6. Switch position when connected to Source 1, or Source 2 shall be pad - lockable

J. Additional Features:

1. Mechanical position indicators (yellow) visible to the operator shall be included for Source 1 (preferred), Source 2, (alternate), and Center Off (disconnected).
2. LED indicators for Source 1 (preferred), and Source 2 (alternate).
3. Auxiliary position indicating contacts, rated 10 amps, 250 Vac shall be provided consisting of one closed when the MTS is connected to Source 1 (preferred), and one contact closed when the MTS is connected to Source 2 (alternate)
4. A form A contact shall be provided to indicate switch is in the Center Off (disconnected) position.
5. Auxiliary Contacts: Position indicating contacts, rated 10 amps, 250 Vac shall be provided consisting of two closed when the MTS is connected to Source 1 (preferred), and two contact closed when the MTS is connected to Source 2 (alternate).

K. Withstand and Closing Ratings:

1. The MTS shall be rated to close on and withstand the available RMS symmetrical short circuit current at the MTS terminals with the type of overcurrent protection shown on the plans. WCR MTS ratings @ 480v shall be as follows when used with specific circuit breakers or current limiting fuses:

MTS Ampacity	Withstand & Closing Rating MCCB	W/CLF
150-600	50,000A	200,000
800-1200	65,000A	200,000

PART 3 - EXECUTION

3.1 INSTALLATION

A. Design each fastener and support to carry load indicated by seismic requirements and according to seismic-restraint details. See Division 26 Section "Vibration and Seismic Controls for Electrical Systems."

B. Floor-Mounting Switch: Anchor to floor by bolting.

1. Floor-mounted transfer switches (except drawout switches supported by wheeled carriages, which must be rolled out at floor level) shall be mounted on concrete bases complying with the following requirements:

a. Concrete Bases: 4 inches (100 mm) high, reinforced, with chamfered edges. Extend base no more than 4 inches (100 mm) in all directions beyond the maximum dimensions of switch, unless otherwise indicated or unless required for seismic support. Construct concrete bases according to Division 26 Section "Hangers and Supports for Electrical Systems." Where Section "Hangers and supports for Electrical Systems." Is not included in the spec book refer to Division 26 Section "Basic Electrical Requirements".

C. Annunciator Panel Mounting: Flush in wall, unless otherwise indicated.

D. Identify components according to Division 26 Section "Identification for Electrical Systems." Where section "Identification for Electrical Systems" is not included in the spec book refer to Division 26 section "Basic Electrical Requirements"

E. Set field-adjustable intervals and delays, relays, and engine exerciser clock.

3.2 CONNECTIONS

A. Wiring to Remote Components: Match type and number of cables and conductors to control and communication requirements of transfer switches as recommended by manufacturer. Increase raceway sizes at no additional cost to Owner if necessary to accommodate required wiring.

B. Field control connections shall be made on a common terminal block that is clearly and permanently labeled.

C. Transfer switch shall be provided with AL/CU mechanical lugs sized to accept the full output rating of the switch. Lugs shall be suitable for the number and size of conductors shown on the drawings.

D. Ground equipment according to Division 26 Section "Grounding and Bonding for Electrical Systems." Where section "Grounding and Bonding for Electrical Systems" is not included in the spec book refer to Division 26 section "Basic Electrical Requirements"

E. Connect wiring according to Division 26 Section "Low-Voltage Electrical Power Conductors and Cables." Where section "Grounding and Bonding for Electrical Systems" is not included in the spec book refer to Division 26 section "Basic Electrical Requirements"

3.3 SOURCE QUALITY CONTROL

A. Prior to shipping, factory shall test and inspect components, assembled switches, and associated equipment to ensure proper operation.

B. Factory shall check transfer time and voltage, frequency, and time-delay settings for compliance with specified requirements.

C. Factory shall perform dielectric strength test complying with NEMA ICS 1.

3.4 FIELD QUALITY CONTROL

A. Manufacturer's Field Service: The supplier of the transfer switch(es) and associated equipment shall inspect, test, and adjust components, assemblies, and equipment installations, including connections, and report results in writing.

B. Manufacturer's representative shall perform tests and inspections and prepare test reports.

C. After installing equipment and after electrical circuitry has been energized, installer shall test for compliance with requirements.

1. Perform recommended installation tests as recommended in manufacturer's installation and service manuals.
2. After energizing circuits, demonstrate interlocking sequence and operational function for each switch.

    a. Simulate power failures of normal source to automatic transfer switches and of emergency source with normal source available.
    b. Verify time-delay settings.
    c. Verify that the transfer switch is accurately metering AC voltage and current.
    d. Verify proper sequence and correct timing of automatic engine starting, transfer time delay, retransfer time delay on restoration of normal power, and engine cool-down and shutdown.

D. Infrared Scanning: After Substantial Completion, but not more than 60 days after Final Acceptance, perform an infrared scan of each switch. Remove all access panels so joints and connections are accessible to portable scanner.

1. Follow-up Infrared Scanning: Perform an additional follow-up infrared scan of each switch 11 months after date of Substantial Completion.
2. Instrument: Use an infrared scanning device designed to measure temperature or to detect significant deviations from normal values. Provide calibration record for device.
3. Record of Infrared Scanning: Prepare a certified report that identifies switches checked and that describes scanning results. Include notation of deficiencies detected, remedial action taken, and observations after remedial action.

3.5 DEMONSTRATION

A. After generator set installation, the generator and transfer switch supplier shall conduct a complete operation, basic maintenance, and emergency service seminar covering generator set and transfer switch equipment, for up to 10 people employed by the Owner.

1. The seminar shall include instruction on operation of the transfer equipment, normal testing and exercise, adjustments to the control system, use of the PC based service and maintenance tools provided under this contract, and emergency operation procedures.
2. The class duration shall be at least 8 hours in length, and include practical operation with the installed equipment.

3.6 SERVICE AND SUPPORT

A. The manufacturer shall supply the Service Provider with a complete set of the service and maintenance software required to support the product. The software shall be provided at a training class attended by the user, to qualify the user in proper use of the software. The software shall have the following features and capabilities:

1. The software shall allow adjustment of all functions described herein, adjustment of operating levels of all protective functions, and programming of all optional functions in the controller. Adjustments shall be possible over modem from a facility that is remote from the generator set.
2. The software shall be capable of storing and displaying data for any function monitored by the generator set control. This data shall be available in common file formats, and on graphical "strip chart" displays.
3. The software shall automatically record all control operations and adjustments performed by any operator or software user, for tracking of changes to the control.
4. The software shall display all warning, shutdown, and status changes programmed into transfer switch controller. For each event, the control shall provide information on the nature of the event, when it last occurred, and how many times it has occurred.

END OF SECTION 263600

SECTION 264100 - LIGHTNING PROTECTION SYSTEM

PART 1 - GENERAL

1.1 GENERAL

A. Objective - To provide safety for the building and occupants by preventing damage to building structure caused by lightning.

B. Standards - The following specifications and standards of the latest issue form a part of this specification:

1. Lightning Protection Institute Installation Standard, LPI 175
2. Underwriters Laboratories, Inc. Installation Requirements, UL96A
3. National Electrical Code (NEC)
4. NFPA 780

1.2 SYSTEM DESIGN

A. The work covered by this section of the specification consists of furnishing all labor, materials, and items of service required for the completion of a functional and unobtrusive lightning protection system as approved by the Architect and in strict accordance with this section of the specifications.

B. If any departure from the submittal drawings covered below are deemed necessary by the Contractor, details of such departures and reasons therefore shall be submitted as soon as practical to the Architect for approval.

1.3 SUBMITTALS

A. Complete design drawings showing the type, size, and locations of all grounding, down conductors, through roof/through wall assemblies, roof conductors, and air terminals shall be submitted to the Architect for approval.

1.4 QUALITY ASSURANCE

A. The lightning protection system shall conform to the requirements and standards for lightning protection systems of the LPI, UL, NFPA, and NEC. Upon completion, application shall be made to the Underwriters Laboratories, Inc. for inspection and certification. In addition, the Lightning Protection Institute certificate shall be delivered to the Owner ensuring that the concealed components have also been monitored during job progress.

PART 2 - PRODUCTS

2.1 STANDARDS

A. The system to be furnished under this specification shall be the standard product of manufacturers regularly engaged in the production of lightning protection equipment and shall be the manufacturer's latest approved design. The equipment shall be UL listed and properly UL labeled.

B. All equipment shall be new, and of a design and construction to suit the application where it is used in accordance with accepted industry standards and LPI, UL, NFPA, and NEC code requirements.

2.2 QUALIFIED MANUFACTURERS

A. Qualified manufacturers for the lightning protection system as specified herein are as follows:

Advanced Lightning Technology - Dallas
Bonded Lightning - Dallas
Thompson Lightning Protection - Minnesota
Harger Lightning Protection - Illinois
East Coast Lightning Equipment - Connecticut
Robbins Lightning, Inc. - Missouri

2.3 LIGHTNING PROTECTION EQUIPMENT

A. All materials shall be copper and bronze and of the size, weight, and construction to suit the application, and used in accordance with LPI, UL, and NFPA code requirements. Class I sized components may be utilized on roof levels 75 feet and below in height. Class II sized components are required for roof levels over 75 feet in height. Bolt type connectors and splicers shall be utilized on Class I and Class II structures. Pressure squeeze clamps are not acceptable. All mounting hardware shall be stainless steel to prevent corrosion.

B. Aluminum Components - Aluminum materials shall not be used except on roofs that utilize aluminum roofing components. On aluminum metal roofs or where aluminum parapet caps exist, the entire roof lightning protection equipment shall utilize aluminum components to insure compatibility. However, the downleads and grounding are to utilize copper with the bimetal transition occurring at the through roof assembly with an approval bimetal through roof assembly.

C. Surge Protection Devices – a surge protection device at the main electrical service entrance is required by lightning protection standards. The surge protection device must comply with UL Standard 1449 as a Type 1 or Type 2 lightning rated unit of 20kA or more. It shall be the responsibility of the Electrical Contractor to install or verify that a surge protection device is installed on the main electrical service.

D. Components of the lightning protection system shall include, but be limited to, the

following items:

1. Copper air terminals with associated adapters, braces, bushings, couplings, swivel couplings and safety tips.
2. Air terminal bases for various mounting arrangements.
3. Copper ground conductors.
4. Exothermic conductor connections.
5. Conductor fasteners, straps, and supports.
6. Finials (as required).
7. Bolted and crimp fittings and connectors.
8. Grounding rods, plates, straps, and test wells.
9. Roof penetrations and flashings.
10. Required clamps.

E. Aluminum components shall be acceptable for use on aluminum roofing systems.

PART 3 - EXECUTION

3.1 PRODUCT SUBMITTAL DOCUMENTS

A. The Lightning Protection subcontractor shall prepare documents for review and approval prior to installing any material. Submittal shall include complete descriptive literature describing the items to be installed.

B. The submittal documents shall include complete drawings describing the placement of all devices, routing of conductors, and installation details for this project. These drawings shall become part of the record drawings for this building, and reproducible documents shall be provided to the Architect. All field modifications required shall be indicated on the submittal drawings.

3.2 INSTALLATION

A. An experienced installation company that is UL listed, a member of the Lightning Protection Institute and an employer of Certified Master Installers of lightning protection systems shall install the lightning protection system. A Certified Master Installer shall directly supervise the work.

B. All equipment shall be installed in a neat, workmanship manner. The system shall consist of a complete conductor network at the roof and include air terminals, connectors, splicers, bonds, copper down leads, and proper ground terminals.

C. Copper down lead cables shall be utilized even when aluminum is required on the roof. Down lead cables in conduit shall not be brought directly through the roof. Through roof assemblies with solid brass or stainless steel rods shall be utilized for this purpose. Structural steel may be utilized in the installation as outlined by UL, NFPA, and LPI.

3.3 COORDINATION

A. The lightning protection installer shall work with other trades to insure a correct, neat, and unobtrusive installation. It shall be the responsibility of the lightning protection installer to assure a sound bond to the main metal water service and to insure interconnection with other ground systems.

3.4 COMPLETION

A. Upon completion of the installation, the lightning protection installer shall secure and deliver to the owner the Underwriters Laboratories, Inc. Master Label certification and the Lightning Protection Institute Certified System certification. The system will not be accepted without the UL Master Label plate and the LPI certification certificate.

END OF SECTION 264100

SECTION 264313 - TVSS FOR LOW-VOLTAGE ELECTRICAL POWER CIRCUITS

PART 1 - GENERAL

1.1 SUMMARY

A. This Section includes Transient Voltage Surge Suppression for low-voltage power, control, and communication equipment.

1.2 DEFINITIONS

A. SVR: Suppressed voltage rating.

B. TVSS: Transient voltage surge suppressor.

1.3 SUBMITTALS

A. Product Data: For each type of product indicated. Include rated capacities, operating weights, operating characteristics, furnished specialties, and accessories.

B. Product Certificates: For transient voltage suppression devices, signed by product manufacturer certifying compliance with the following standards:

1. UL 1283.
2. UL 1449.
3. MIL-STD 220A. Conduct spectrum analysis of each unit based on test procedures between 50kHz and 200kHz indicating the device noise attenuation.
4. ANSI/IEEE C62.41 and ANSI/IEEE C62.45: Provide certified documentation of applicable Location Category Testing in full compliance guidelines.

C. Shop Drawings: Submit shop drawings to indicate information not fully described by the product data.

1. Include electrical characteristics and ratings for the specified equipment.
2. Include wiring diagrams indicating the internal connections of the specified equipment within its enclosure.
3. Indicate device dimensions, weights, mounting provisions, and connection details.

D. Warranty: Warranty statement clearly establishing the terms and conditions to the building/facility owner/operator.

E. Operation and Maintenance Data: For transient voltage suppression devices to include in emergency, operation, and maintenance manuals.

1.4 QUALITY ASSURANCE

A. Source Limitations: Obtain suppression devices and accessories through one source from a single manufacturer.

B. Electrical Components, Devices, and Accessories: Listed and labeled as defined in NFPA 70, Article 100, by a testing agency acceptable to authorities having jurisdiction, and marked for intended use.

C. Comply with IEEE C62.41, "IEEE Guide for Surge Voltages in Low Voltage AC Power Circuits," and test devices according to IEEE C62.45, "IEEE Guide on Surge Testing for Equipment Connected to Low-Voltage AC Power Circuits."

D. Comply with NEMA LS 1, "Low Voltage Surge Protection Devices."

E. Comply with UL 1283, "Electromagnetic Interference Filters," and UL 1449, "Transient Voltage Surge Suppressors."

1.5 COORDINATION

A. Coordinate location of field-mounted surge suppressors to allow adequate clearances for maintenance.

1.6 WARRANTY

A. Special Warranty: Manufacturer's standard form in which manufacturer agrees to repair or replace components of surge suppressors that fail in materials or workmanship within ten years from date of Substantial Completion.

1.7 EXTRA MATERIALS

A. Furnish extra materials described below that match products installed and that are packaged with protective covering for storage and identified with labels describing contents.

1. Replaceable Protection Modules: One of each size and type installed.

PART 2 - PRODUCTS

2.1 MANUFACTURERS

A. Manufacturers: Subject to compliance with requirements, provide products by one of the following:

1. ABB, Electrification Business
2. Eaton
3. Siemens Industry, Inc
4. Square D

2.2 COMMON REQUIREMENTS FOR SUPPRESSORS

A. Surge Protection Device Description: Modular design with field-replaceable modules, sine-wave-tracking type with the following features and accessories:

1. Fuses, rated at 200-kA interrupting capacity.
2. Fabrication using bolted compression lugs for internal wiring.
3. Redundant suppression circuits.
4. Redundant replaceable modules.
5. Arrangement with wire connections to phase buses, neutral bus, and ground bus.
6. LED indicator lights for power and protection status.
7. Audible alarm, with silencing switch, to indicate when protection has failed.
8. One set of dry contacts rated at 5 A and 250-V ac, for remote monitoring of protection status. Coordinate with building power monitoring and control system.
9. Surge-event operations counter: Six-digit transient counter set to total all transient surges that deviate from the fundamental sine wave by more than 125V.
10. Normal Audible Noise less than 0dB.
11. EMI/RFI Noise attenuation: Exceeding 55dB at 100kHz, using 50 ohm insertion loss test.
12. Magnetic Fields: No appreciable magnetic fields shall be generated. The device shall be capable of use directly in computer rooms in any location without danger to data storage systems or devices.
13. Leakage Current less than 1mA.

B. Integral Disconnect Switch (If Required, Refer to "Installation of Surge Protection Devices")

1. The device shall have an optional NEMA compliant safety interlocked integral disconnect switch with an externally mounted metal manual operator.
2. The switch shall disconnect all ungrounded circuit conductors from the distribution system to enable testing and maintenance without interruption to the facility's distribution system.
3. The switch shall be rated for 600Vac.
4. The SPD device shall be tested to UL1449 3rd Edition listed with the integral disconnect switch and the UL1449 VPR ratings shall be provided.
5. The integral disconnect switch shall be capable of withstanding, without failure, the published maximum surge current magnitude without failure or damage to the switch.
6. The line side of the integral disconnect shall be blocked off so that when the SPD is opened there is no direct access to the voltage present on the line side of the disconnect.

2.3 SERVICE ENTRANCE SUPPRESSORS (CAT C)

A. Service Entrance Suppressors to meet "Common Requirements for Suppressors" listed above, unless otherwise indicated.

B. Maximum Category C combination wave clamping voltage shall not exceed the following:

1. 600V, line to neutral and line to ground on 120/208 V systems.

2. 1000V, line to neutral and line to ground on 277/480 V systems

C. Withstand Capabilities: 3000 Category C surges with less than 5 percent change in clamping voltage.

D. Peak Single-Impulse Surge Current Rating:

1. 320/160 kA per phase/mode.

E. Connection Means: Permanently wired.

F. Protection modes and UL 1449 SVR for grounded wye circuits with voltages of 480Y/277, 3- phase, 4-wire circuits shall be as follows:

1. For Non-Fused Devices:

a. Line to Neutral: 800 V for 480Y/277.
b. Line to Ground: 800 V for 480Y/277.
c. Neutral to Ground: 800 V for 480Y/277.

2. For Fused Devices:

a. Line to Neutral: 1000 V for 480Y/277.
b. Line to Ground: 1000 V for 480Y/277.
c. Neutral to Ground: 1000 V for 480Y/277.

2.4 DISTRIBUTION PANELBOARD SUPPRESSORS (CAT B)

A. Distribution Panelboard Suppressors to meet "Common Requirements for Suppressors" listed above, unless otherwise indicated.

B. Maximum Category B combination wave clamping voltage shall not exceed the following:

1. 600V, line to neutral and line to ground on 120/208 V systems.
2. 1000V, line to neutral and line to ground on 277/480 V systems

C. Withstand Capabilities: 3000 Category B surges with less than 5 percent change in clamping voltage.

D. Peak Single-Impulse Surge Current Rating:

1. 240/120 kA per phase/mode.

E. Protection modes and UL 1449 SVR for grounded wye circuits with voltages of 480Y/277, 3- phase, 4-wire circuits shall be as follows:

1. For Non-Fused Devices:

a. Line to Neutral: 800 V for 480Y/277.
b. Line to Ground: 800 V for 480Y/277.
c. Neutral to Ground: 800 V for 480Y/277.

2. For Fused Devices:

a. Line to Neutral: 1000 V for 480Y/277.
b. Line to Ground: 1000 V for 480Y/277.
c. Neutral to Ground: 1000 V for 480Y/277.

2.5 LIGHTING AND APPLIANCE PANELBOARD SUPPRESSORS (CAT A)

A. Lighting and Appliance Panelboard Suppressors to meet "Common Requirements for Suppressors" listed above, unless otherwise indicated.

B. Maximum Category B combination wave clamping voltage shall not exceed the following:

1. 600V, line to neutral and line to ground on 120/208 V systems.
2. 1000V, line to neutral and line to ground on 277/480 V systems

C. Withstand Capabilities: 3000 Category B surges with less than 5 percent change in clamping voltage.

D. Peak Single-Impulse Surge Current Rating:

1. 80/40 kA per phase/mode.

E. Protection modes and UL 1449 SVR for grounded wye circuits with voltages of 480Y/277 or 208Y/120, 3-phase, 4-wire circuits shall be as follows:

1. For Non-Fused Devices:

a. Line to Neutral: 800 V for 480Y/277 and 400 V for 208Y/120.
b. Line to Ground: 800 V for 480Y/277 and 400 V for 208Y/120.
c. Neutral to Ground: 800 V for 480Y/277 and 400 V for 208Y/120.

2.6 ENCLOSURES

A. NEMA 250, with type matching the enclosure of panel or device being protected.

PART 3 - EXECUTION

3.1 INSTALLATION OF SURGE PROTECTION DEVICES

A. Install devices at service entrance on load side, with ground lead bonded to service entrance ground.

B. Install devices for panelboard and auxiliary panels with conductors or buses between suppressor and points of attachment as short and straight as possible. Do not exceed manufacturer's recommended lead length. Do not bond neutral and ground.

1. Provide multipole, 60-A frame circuit breaker as a dedicated disconnect for

suppressor, unless otherwise indicated. Comply with manufacturer's written recommendation for conductor and trip rating of circuit-breaker for connecting TVSS devices to distribution system. Match circuit-breaker size to conductor size.

2. Where the panel on plan does not indicate a dedicated breaker for SPD. An integral disconnect shall be provided as described in "Common Requirements For Suppressors"

3.2 FIELD QUALITY CONTROL

A. Prepare for acceptance tests as follows:

1. Test insulation resistance for each component, connecting supply, feeder, and control circuit.
2. Test continuity of each circuit.

B. Testing Agency: Engage a qualified independent testing and inspecting agency as defined in Division 26 Section "Common Work Results for Electrical" to perform the following field tests and inspections and prepare certified test reports:

1. After installing surge protection devices, but before electrical circuitry has been energized, test for compliance with requirements.
2. Complete startup checks according to manufacturer's written instructions.
3. Perform each visual and mechanical inspection and electrical test stated in NETA ATS 7.19.1, "Surge Arresters, Low-Voltage Surge Protection Devices" Section. Certify compliance with test parameters.

3.3 CLEANING

A. Clean components according to manufacturer's written instructions.

B. Prior to installation of front trim and cover plates inspect interior surfaces and perform the following:

1. Remove paint splatters and other spots.

END OF SECTION 264313

SECTION 265000 - LIGHTING

PART 1 - GENERAL

1.1 LIGHTING SCHEDULE

A. The Contractor shall install lighting fixtures and accessories as shown on the drawings and/or described herein. The Contractor shall also install lamps for all fixtures.

1.2 SUBMITTALS & PRIOR APPROVAL

A. Prior approvals and/or submittals shall submit the following:

1. Cutsheets clearly indicating fixture options selected.
2. Photometric calculations of the floor plan including point by point calculations and a calculation schedule which shall include the following foot-candle measurements for each room and site plan.

    a. Maximum value
    b. Minimum value
    c. Max/Min Ratio
    d. Average

PART 2 - PRODUCTS

2.1 LED LIGHTING

A. Lighting fixtures with LED light sources shall meet the following fixture and light source requirements:

1. LED Color Temperature – As shown on drawings CRI > 70
2. Line Voltage – Universal Voltage 120-277 volts
3. Governmental Standards – LM79 and LM80 Compliant
4. Expected Lamp Life – LED Life Rating (L_{70} B_{10}) to be 60,000 hours to 100,000 hours; Defined as time of operation (in hours) to 30% lumen depreciation (i.e. 70% lumen maintenance), derived from Luminaire in-situ temperature measurement testing (i.e. LED chip package temperature (T_S) measurement obtained with the LED chip package operating in given luminaire and in a given stabilized ambient environment) under UL1598 environments and directly correlated to LED package manufacturers IESNA LM-80-08 data. Predicted (L_{70} B_{10}) Limits (@ 25°C luminaire ambient operating environment): Greater than 60,000 hours @ 350mA Drive Current
5. Driver – Components must be fully encased in potting material for moisture resistance, and must comply with IEC and FCC standards
6. Surge Protection – Surge protection must be provided including separate sure protection built into electronic driver
7. Mechanical – Luminaire LED system components to be low copper aluminum, with high performance heat sink(s) designed specifically for LED luminaires. No active

cooling features (Fans, etc.). Luminaire configuration must allow for modular upgradability and/or field repair of all electrical components (i.e. LED modules, Driver(s), etc.). Drivers and vertical light bars must be all mounted to a twist-lock tool-less assembly for ease of installation and trouble- shooting.

2.2 LIGHTING ACCESSORIES

A. All lighting shall be equipped with the appropriate housing for the ceiling type shown on the architectural reflected ceiling plan.

1. GYP Ceilings –

a. 1'X4' 2'X2' & 2'X4' Troffers: Provide flange kit or surface mount kit. If not explicitly indicated on plan contractor shall price based on the more costly product and submit an RFI to Engineer prior to purchase.
b. Downlights: Provide recessed housing and appropriate flange kit.
c. Strip lighting: Provide surface mount kit. In areas with ceiling heights greater than 10' contractor shall provide chain suspension hardware.
d. Architectural linear fixtures: Where indicated as recessed contractor shall provide flange kit or mud-in kit as required. If not explicitly indicated on plan contractor shall price based on the more costly product and submit an RFI to Engineer prior to purchase.

2. Grid Ceilings – Provide appropriate mounting hardware to recess fixtures into grid.

B. Fire ratings: Lighting in fire rated ceiling shall be equipped with fire padding, caulking, and/or housings as required to maintain fire ratings. Contractor shall refer to architectural plans for all fire ratings prior to bid.

C. Emergency fixtures: Fixtures shall be connected to the life safety branch via UL924 devices. Devices shall be capable of returning fixture to 100% brightness upon outage regardless of previous fixture setting.

2.3 OCCUPANCY SENSORS

A. Sensor shall be a self-contained dual voltage ceiling mounted device capable of directly switching loads upon detection of human activity. Sensor must be circular, and mount to either a single gang enclosure, or surface mount to a round pancake box.

B. Sensor must be rated for 120 through 277 VAC and be capable of switching zero to 1200 watts of electronic ballast loads. Sensors must be capable of parallel wiring for multi-sensor applications.

C. Sensor time delay shall be factory set for typical applications, and field adjustable from 30 seconds to 20 minutes. Sensor must provide a green LED motion indicator. Red LED denoting life safety shall not be permitted.

D. PIR sensing must utilize a high density Fresnel domed lens, providing a circular view pattern of at least 360 degrees by 56 degrees.

E. Passive Dual Technology (PDT) sensing must incorporate PIR with Microphonics, which utilizes a passive microphone with automatic gain control (AGC) to sense both occupants moving and sounds. The PIR must be used to initiate an on condition, once on the PIR or Microphonics shall keep the load on. After the time delay expires and the load goes off, the Microphonics shall remain active up to 10 seconds as a back-up grace period.

F. Wall box mounted occupancy sensors shall mount in a standard utility box. Sensor shall have self-contained relay (no power pack required), utilize PIR and microphonics detection, and include auto sensitivity adjustment. Wall box sensor shall be intrinsically grounded and include ON/OFF switch and adjustable time delay.

G. Occupancy Sensor:

1. Ceiling mount for offices and restrooms – Lutron #LOS-CUS-1000-WH / PP-DV; Wattstopper UT-305-2/BZ-50; Sensor Switch CM PDT9
2. Wall mount for offices, storage rooms, etc. – Lutron #MS+OPS6M-DV-color; Wattstopper WD-170-FINISH; Sensor Switch WSX
3. Ceiling mount in large rooms – Lutron #LOS-CDT-2000WH, with #PP-DV universal power pack; Wattstopper DT-205 / BZ-50; Sensor Switch CM PDT10 with PP16
4. Wall/ceiling mount at end of corridors – Lutron #LOS-WIR-WH / PP-DV 1600'ft coverage; Wattstopper CX-105 / BZ-50; Sensor Switch WV16 with PP16
5. Wall/ceiling mount at center of corridors – Watt Stopper #CX-100-3 series, with #BZ-50 universal power pack; Sensor Switch WV16 with PP16
6. Room controllers – Wattstopper #LMRC-101; nLight #nPP 16

2.3 FIXTURES

A. Fixtures as described in the Fixture Schedule on the drawings shall be furnished by the Contractor and shall be properly installed.

B. Where fixtures are specified with emergency remote test switches contractor shall coordinate location of remote test switch with Owner/Architect prior to installation.

PART 3 - EXECUTION

3.1 INSTALLATION

A. Unless otherwise specified, lighting fixtures shall be permanently installed and connected to the wiring system.

B. The Contractor shall support each fixture, independently from the building structure. Ceiling framing members shall not be used to support fixtures except in specified areas where ceiling supports for this purpose have been specified elsewhere in these specifications. Each fixture shall have at least two fixture supports.

C. Flexible conduit used for fixture whips shall be at least twelve (12) inches, but not more than 48 inches long.

3.2 CEILING COMPATIBILITY

A. Catalog numbers shown on the drawings or descriptions of lighting fixtures contained herein may indicate fixture compatibility with certain types of ceiling construction. Contractor shall determine exact type of ceiling actually to be furnished in each area and shall obtain fixtures to suit, deviation from specified catalogue numbers or descriptions only where necessary and only to the extent necessary to insure fixture/ceiling compatibility.

3.3 LIGHT LEAKS

A. The Contractor shall, at the end of this project, adjust all recessed lighting fixtures so that there will be no light leaks between the fixture trim and the ceiling. Contractor shall also adjust recessed fluorescent fixtures to eliminate any light leaks between fixture trim and ceiling grid member.

3.4 LAMPS

A. The Contractor shall install lamps in all fixtures and shall obtain replacement lamps should any not properly operate or become damaged during construction.

3.5 EXIT FIXTURES

A. Exit fixtures shall be installed according to Life Safety Code requirements, with face(s) plainly visible and directional arrows indicating the proper direction of egress.

END OF SECTION 265000