English 351 PO

OWNER'S MANUAL

IMPORTANT SAFETY RULES

Read, understand, and follow all instructions carefully before installing and using this product.

PureSpa™
SC-WF10

For illustrative purposes only.

Do not forget to try these other fine Intex products: pools, pool accessories, in-home toys, airbeds and boats available at fine retailers or visit our website.

Due to a policy of continuous product improvement, Intex reserves the right to change specifications and appearance, which may result in updates to the instruction manual without notice.

INTEX®

IMPORTANT!
DO NOT RETURN PRODUCT TO STORE

To purchase parts and accessories or to obtain non-technical assistance, Visit

www.intexcorp.com

For technical assistance, missing parts or warranty claims call (for U.S. and Canadian Residents):

1-310-549-8235

Monday through Friday, 8:30am to 5:00pm Pacific Time

351-*PO-R0-2603

TABLE OF CONTENTS

Warning..... **3-4**

Parts..... **5-6**

Product Specifications..... **7**

Set-up..... **7-12**

Salt Level Information..... **13**

Operation..... **14-20**

LED Code Chart..... **21**

Maintenance and Chemicals..... **22-29**

Storage..... **29**

Troubleshooting..... **30-34**

Filter pump motor disassembly..... **35**

Warranty..... **36**

WARNING: Changes or modifications not expressly approved by the party responsible for compliance could void the user's authority to operate the equipment.

NOTE: This equipment has been tested and found to comply with the limits for a Class B digital device, pursuant to part 15 of the FCC Rules. These limits are designed to provide reasonable protection against harmful interference in a residential installation. This equipment generates, uses and can radiate radio frequency energy and, if not installed and used in accordance with the instructions, may cause harmful interference to radio communications. However, there is no guarantee that interference will not occur in a particular installation. If this equipment does cause harmful interference to radio or television reception, which can be determined by turning the equipment off and on, the user is encouraged to try to correct the interference by one or more of the following measures:

- Reorient or relocate the receiving antenna.
- Increase the separation between the equipment and the receiver.
- Connect the equipment into an outlet on a circuit different from that to which the receiver is connected.
- Consult the dealer or an experienced radio/TV technician for help.

This device complies with part 15 of the FCC Rules. Operation is subject to the following two conditions: (1) This device may not cause harmful interference, and (2) this device must accept any interference received, including interference that may cause undesired operation.

IMPORTANT SAFETY INSTRUCTIONS

When installing and using this electrical equipment, basic safety precautions should always be followed, including the following.

READ AND FOLLOW ALL INSTRUCTIONS

⚠ DANGER

- Risk of Accidental Drowning. Extreme caution must be exercised to prevent unauthorized access by children. To avoid accidents, ensure that children cannot use this spa unless they are supervised at all times.
- Risk of drowning. Inspect the spa cover regularly for premature wear and tear, damage, or signs of deterioration. Never use a worn or damaged cover: it will not provide the level of protection required to prevent unsupervised access to the spa by a child.
- Risk of injury. Replace damaged cord immediately. Do not bury cord. Connect to a grounded, grounding type receptacle only.
- Risk of Injury. The suction fittings in this spa are sized to match the specific water flow created by the pump. Should the need arise to replace the suction fittings or the pump, be sure that the flow rates are compatible.
- To reduce the risk of injury, do not remove the suction fittings. Never operate a spa or hot tub if the suction fittings are loose, broken, damaged, cracked or missing. Replace immediately. Never replace a suction fitting with one rated less than the flow rate marked on the original suction fitting.
- To reduce the risk of drowning from hair and body entrapment, install a suction fitting(s) with a marked flow rate that equals or exceeds the flow rate marked on the equipment assembly.
- Ensure power outlet current & voltage is suitable for the electrical equipment. Never use an extension cord.
- Risk of Electric Shock. Install at least 5 feet (1.5 m) from all metal surfaces. As an alternative, a spa may be installed within 5 feet (1.5 m) of metal surfaces if each metal surface is permanently connected by a minimum 8 AWG (8.4 mm^2) solid copper conductor to the wire connector on the terminal box that is provided for this purpose.
- Risk of Electric Shock. Do not permit any electric appliance, such as a light, telephone, radio, or television, within 5 feet (1.5 m) of a spa or hot tub.
- Risk of Electric Shock. Do not use the spa when it is raining, thundering or lightning.

⚠ WARNING

- A wire connector is provided on this unit to connect a minimum 8 AWG (8.4 mm^2) solid copper conductor between this unit and any metal equipment, metal enclosures of electrical equipment, metal water pipe, or conduit within 5 feet (1.5 m) of the unit.
- To reduce the risk of drowning and injury, do not permit children to use this product unless they are closely supervised at all times.
- To reduce the risk of child drowning, attach and lock spa cover after each use.
- Never place any metallic objects on the surface of the control base charging dock.
- To reduce the risk of drowning and injury:

a) Never use the spa alone or allow others to use the spa alone.
b) Before entering a spa or hot tub, the user should measure the water temperature with an accurate thermometer since the tolerance of water temperature-regulating devices varies.
c) The water in a spa should never exceed 104°F (40°C). Water temperatures between 100°F (38°C) and 104°F (40°C) are considered safe for a healthy adult. Lower water temperatures are recommended for young children and when spa use exceeds 10 minutes.
d) Pregnant and possible pregnant women should consult a physician before using a spa or hot tub.
e) Since excessive water temperatures have a high potential for causing fetal damage during the early months of pregnancy, pregnant or possibly pregnant women should limit spa water temperatures to 100°F (38°C). Do not stay in spa for longer than 10 minutes.
f) The use of alcohol, drugs, or medication before or during spa use may lead to unconsciousness with the possibility of drowning.
g) Obese persons and persons with a history of heart disease, low or high blood pressure, circulatory system problems, or diabetes should consult a physician before using a spa.
h) Persons using medication should consult a physician before using a spa since some medication may induce drowsiness while other medication may affect heart rate, blood pressure, and circulation.
i) Check with a doctor before use if pregnant, diabetic, in poor health, or under medical care.

⚠ WARNING

j) Exit immediately if uncomfortable, dizzy, or sleepy. Spa heat can cause hyperthermia and unconsciousness. The use of alcohol, drugs, or medication can greatly increase the risk of fatal hyperthermia. The causes, symptoms, and effects of hyperthermia may be described as follows:
Hyperthermia occurs when the internal temperature of the body reaches a level several degrees above the normal body temperature of 98.6°F (37°C). The symptoms of hyperthermia include an increase in the internal temperature of the body, dizziness, lethargy, drowsiness, and fainting. The effects of hyperthermia include failure to perceive heat; failure to recognize the need to exit spa or hot tub; unawareness of impending hazard; fetal damage in pregnant women; physical inability to exit the spa or hot tub; and unconsciousness resulting in the danger of drowning.

- People with infectious diseases should not use a spa or hot tub.
- To avoid injury exercise care when entering or exiting the spa or hot tub.
- Always add chemicals to water, never add water to chemicals. Adding water to chemicals may cause strong fumes or violent reactions and hazardous chemical spray.
- Never jump or dive into a spa or any shallow body of water.
- Assembly and disassembly by adults only.
- Always unplug this product from the electrical outlet before removing, cleaning, servicing or making any adjustment to the product.
- The plug must be accessible after product is installed.
- Do not bury the electrical cord. Locate the cord where it will not be damaged by lawn mowers, hedge trimmers and other equipment.
- If the supply cord is damaged, it must be replaced by a qualified electrician in order to avoid a hazard. Use only identical replacement parts when servicing.
- To reduce the risk of electric shock and fire, do not use extension cords, timers, plug adaptors or converter plugs to connect unit to electrical supply; provide a properly located outlet.
- Do not attempt to plug in or unplug this product while standing in water or when your hands are wet.
- Do not leave the spa empty for extended period of time. Do not expose the spa to direct sunlight for extended period of time.
- Provide adequate drainage system around the spa to deal with overflow water and splashes.
- Do not allow the water in the spa to freeze. Do not turn on the spa when the water is frozen.
- Do not use the spa if damaged in delivery and/or malfunctioning in any fashion. Contact the Intex service center for further direction.
- Never pour water with a temperature higher than 104°F (40°C) into the spa directly.
- Keep all pets away from spa to avoid any damage.
- Do not add bath oil or bath salt to the spa water.
- Avoid drowning risk. Keep children away. Children or objects cannot be seen under cover.
- Remove cover completely before entry of bathers – entrapment possible.
- Stay off cover – will not support weight.
- Non-secured or improperly secured covers are a hazard.
- Follow these rules to avoid drowning, or other serious injury.

⚠ WARNING

- This product is provided with a GFCI/RCD located at the end of the power cord. The GFCI/RCD must be tested before each use. Do not use the spa if the GFCI/RCD does not function properly. Disconnect the power cord until the fault has been identified and corrected. Contact a qualified electrician to correct the fault. Do not bypass the GFCI/RCD. There are no serviceable parts inside the GFCI/RCD. Opening the GFCI/RCD will void the warranty.

1. Plug the power cord into a grounded electrical socket.
2. Press the **RESET** button on the GFCI/RCD.
3. Turn on the spa electrical equipment.
4. Press the **TEST** button on the GFCI/RCD. The GFCI/RCD indicator should turn off and the electrical equipment should shut off. If the GFCI/RCD indicator does not turn off, and the electrical equipment does not shut off, the GFCI/RCD is faulty. Do not use the spa. Contact a qualified electrician to correct the fault.
5. Press the **RESET** button on the GFCI/RCD. The indicator on the GFCI/RCD should turn on. If the GFCI/RCD indicator does not turn on, the GFCI/RCD is faulty. Do not use the spa. Contact a qualified electrician immediately to correct the fault.

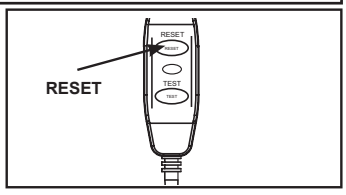

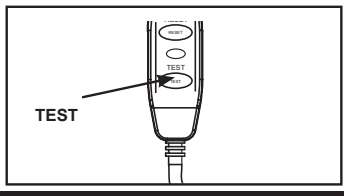

⚠ CAUTION

- Maintain water chemistry in accordance with manufacturer's instructions.

PARTS

Before assembling your product, please take a few minutes to check the contents and become familiar with all the parts.

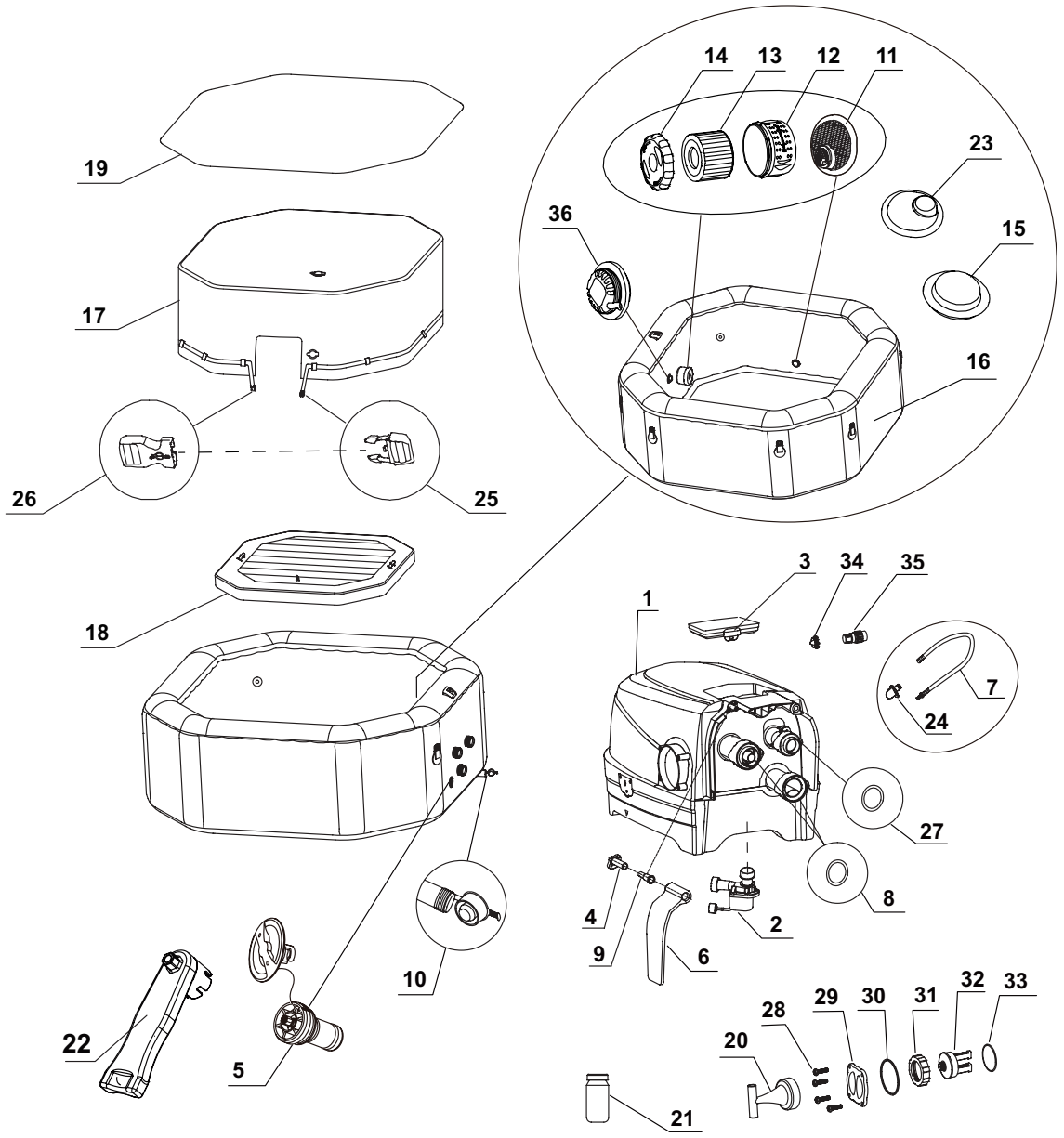

NOTE: Drawings for illustration purpose only. Actual product may vary. Not to scale.

PARTS (continued)

Before assembling your product, please take a few minutes to check the contents and become familiar with all the parts.

REF. NO.	DESCRIPTION	QTY.	SPARE PART NO.	
			4 ADULTS	6 ADULTS
1	CONTROL BASE	1	13027	13027
2	SPA FILTER MOTOR	1	12777	12777
3	CONTROL PANEL	1	12966	12966
4	SIDE COVER HINGE BASE	2	12771	12771
5	AIR PRESSURE RELEASE VALVE CORE	1	12589A	12589A
6	CONTROL BASE SIDE COVER	2	12770	12770
7	SPA INFLATION HOSE	1	11830	11830
8	SPA CONTROL INLET/OUTLET O-RING	2	11788	11788
9	SIDE COVER HINGE FIXER	2	12772	12772
10	SPA DRAIN PLUG	1	13076	13076
11	OUTLET SUCTION FITTING	2	11785	11785
12	FILTER CARTRIDGE HOUSING	2	11798	11798
13	FILTER CARTRIDGE	2	11692	11692
14	FILTER CARTRIDGE HOUSING LID	2	11797	11797
15	INLET PLUG	1	11739	11739
16	SPA TUB	1	12723	12745
17	ENERGY SAVING SPA COVER	1	12754G	13146G
18	SPA INFLATABLE BLADDER	1	12755	13147
19	GROUND CLOTH	1	11933	12110
20	ELECTROLYTIC CELL NUT WRENCH	1	11854	11854
21	TEST STRIPS	1	11855	11855
22	WRENCH	1	11742A	11742A
23	OUTLET PLUG	2	11782	11782
24	HOSE ADAPTOR (PRE -INSTALLED WITH #7)	1	12773	12773
25	MALE BUCKLE	1	11994	11994
26	FEMALE BUCKLE	1	11993	11993
27	SPA CONTROL AIR INLET O-RING	1	11687	11687
28	ELECTROLYTIC CELL COVER SCREW	4	11712	11712
29	ELECTROLYTIC CELL COVER	1	11890	11890
30	ELECTROLYTIC CELL COVER O-RING	1	11897	11897
31	ELECTROLYTIC CELL NUT	1	11852	11852
32	ELECTROLYTIC CELL	1	11851	11851
33	ELECTROLYTIC CELL O-RING	1	11853	11853
34	DEFLATION OUTLET CAP	1	12775	12775
35	DEFLATION HOSE ADAPTOR	1	12774	12774
36	INLET SUCTION FITTING	1	12702	12702

When ordering parts, be sure to quote the model number and part numbers.

SPA SUCTION FITTING

Self-contained spa fittings. – For multiple outlet use only. – Wall mounting only.
Replace suction fittings within 3 installed year. – Tool required: screwdriver.
Spa suction fitting maximum flow rate: 84 gpm (5040 gph)

- Check suction strainer fitting and fasteners for damage or tampering before each use of the spa.
- For service and winterization instructions refer to "Maintenance" and "Storage" sections.
- Read and follow all instructions, save these instructions for future reference.

PRODUCT SPECIFICATIONS

Maximum seating capacity:	4 adults	6 adults
Water capacity:	210 gal (795 L)	290 gal (1098 L)
Inner/outer size:	51/71 in (130/180 cm)	63/83 in (160/211 cm)
Height:	28 in (71 cm)	
Jet pump:	1.4 HP / 120 V / 60 Hz	1.4 HP / 120 V / 60 Hz
Bubble air blower:	1.1 HP / 110-120 V / 60 Hz	
Filter pump flow rate:	460 gal/hr (1,741 L/hr)	
Heater power:	1,300 Watts / 110-120 V / 60 Hz	
Temperature range:	50ºF – 104ºF (10ºC – 40ºC)	
Temperature rise:	2-3ºF/hr (1-1.5ºC/hr)	1.1-2ºF/hr (0.6-1ºC/hr)
Number of Water Jet Nozzles:	4	6
Number of Bubble Jets:	120	140
Spa tub recommended working air pressure:	1.2 psi (0.083 bar)	

Radio frequency radiation exposure Information:
This equipment complies with FCC radiation exposure limits set forth for an uncontrolled environment. This equipment should be installed and operated with minimum distance of 20 cm (7.9'') between the radiator and your body. This transmitter must not be co-located or operating in conjunction with any other antenna or transmitter.
Cord-connected spa with pump, heater, water jet, blower, control panel, built-in hard water treatment, and sanitation system.
Note: the spa equipment features a complete grounding system that is also in contact with the spa water. It is possible that a person may build up static electricity that discharges when touching the water. Regardless, any electric shock experienced should be investigated by a qualified electrician prior to use of the spa. Unplug the spa until the cause is determined and any corrective action completed.

⚠ WARNING

Risk of fire: This product draws a maximum of 13 AMPS. **Most household circuits are rated for 15 to 20 AMPS.** If the circuit breaker trips, please check that no other appliances or other large loads are on the same circuit as the spa. Never use an extension cord. Unfold the line cord prior to use. Never place the plug on combustible materials.

SET UP

Site preparation and requirements
- The spa can be installed indoor or outdoor. For household use only.
- The spa must be setup on a level, flat and smooth surface that is capable of supporting the maximum load of the filled spa with four adult occupants: weight 2500 lbs (1136 kg); six adults: 3500 lbs (1592 kg).
- Make sure the area is free of sharp objects under or around the spa.
- Provide adequate drainage system around the spa to deal with overflow water and splashes.
- Provide a properly located power outlet to connect the spa and allow easy access for periodic testing of the cord mounted GFCI/RCD.
- Make sure there is enough clearance around the spa for full access to the spa equipment for maintenance and/or service.
- The area shall facilitate draining purposes during long term spa storage.
  NOTE: Before setting up and filling the spa with water, make sure the area where the spa will be installed is within your WiFi router coverage range. The area shall be free from metallic walls/mesh and other objects that may interfere with or reduce the WiFi signal.

Additional requirements for indoor installation
- Make sure the floor can support the full weight of the filled spa with the maximum number of occupants. Check with a qualified contractor or a structural engineer to verify this requirement.
- Make sure the floor is water resistant and non-slip surface. Do not install the spa on carpet or other materials that will be damaged by moisture, condensation.
- Do not install the spa indoors on a second floor above finished living space due to the possibility of water and humidity damage.

SET UP (continued)

- Humidity is a natural side effect of indoor spa installation. The room shall be properly ventilated to allow moisture to escape. Install a ventilating system to prevent excess condensation, moisture in the room.

Additional requirements for outdoor installation

- Spa owners may need to comply with local or states laws relating to childproof fencing, safety barriers, lighting, and other safety requirements. Contact your local building code enforcement office for further details.
- Make sure the surface is level, flat, smooth and strong enough to support the full weight of the filled spa.
- Do not setup the spa on grass or dirt, as this increases the amount of debris entering the spa, and damage the spa floor.
- **Do not expose the spa to direct sunlight for extended period of time. Provide protection from the sun such as sunshade, tent, awning or gazebo.**
- It is possible to install and leave the spa outside at a temperature not lower than 39°F (4°C) provided the water temperature inside the spa is higher than 39°F (4°C) and the water inside the circulation system, pump, pipe are not frozen. Put a "temp barrier mat" between the spa floor and the ground to prevent heat loss from the bottom of the spa and to provide better heat retention. Do not use the spa if the ambient or water temperature is 39°F (4°C) or lower.

Setup the spa with at least 2 persons.

1. Move the entire package to the selected site. Do not drag the spa tub across the ground as this can cause damage and leakage.
   Open the carton carefully as this carton can be used to store the spa during long term storage or when not in use.
2. Lay out all the parts on the ground and make sure all the parts are accounted for. For missing or damaged parts contact the appropriate Intex Service Center listed in the separate "Authorized service Centers" sheet.

Safety Sign Card Posting

The Safety Sign card included with the manual shall be posted in an area visible to the users of the spa to alert them of the safety rules and warnings. For replacement of the safety sign card, visit our website at www.intexcorp.com for additional print copies. Laminate the printed safety sign copy for protection from the elements.

Spa Control Panel Charging and Installation

1. Make sure the back of the control panel **(3)** and the control base charging dock surface are clean and dry.
2. Make sure the control base is plugged in and the RCD tested. Place the control panel **(3)** on the control base charging dock to charge the built-in battery **(see drawing 1)**. See "Spa Control Panel" operation section for more details.
3. It takes approximately 3 hours to fully charge the control panel battery. Once the control panel battery is fully charged, you may place the control panel on top of the spa tub wall **(see drawing 2.1)**. To remove the control panel from the spa tub, lift the latch while pulling the control panel away from the support stand **(see drawing 2.2)**.

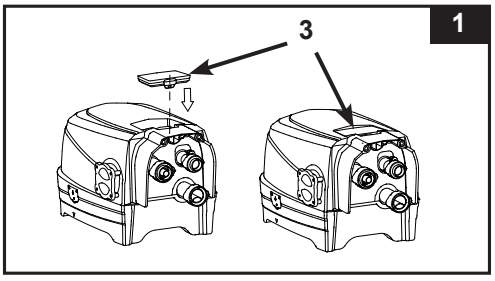

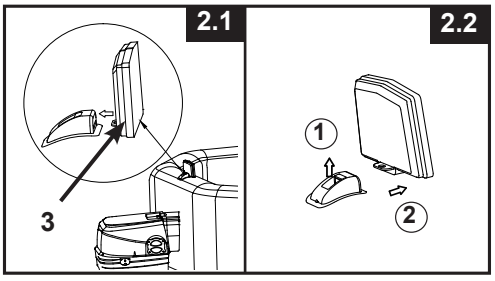

SET UP (continued)

Inflation

Inflate the Spa Tub Wall

1. Take out the ground cloth **(19)** and spread it over the cleared area. Then spread out the spa liner over the ground cloth and point the drain valve towards a suitable draining area.
   NOTE: Spread the ground cloth with the bubbles facing down over the cleared area where you intend to setup your spa.
2. Flip up the control base side cover **(36)** to reveal the air blower inflation outlet. Pull out the latch to open the cover, insert the hose adaptor **(24)** with hose and reattach the latch to the hose adaptor to secure it in place **(see drawing 3)**.

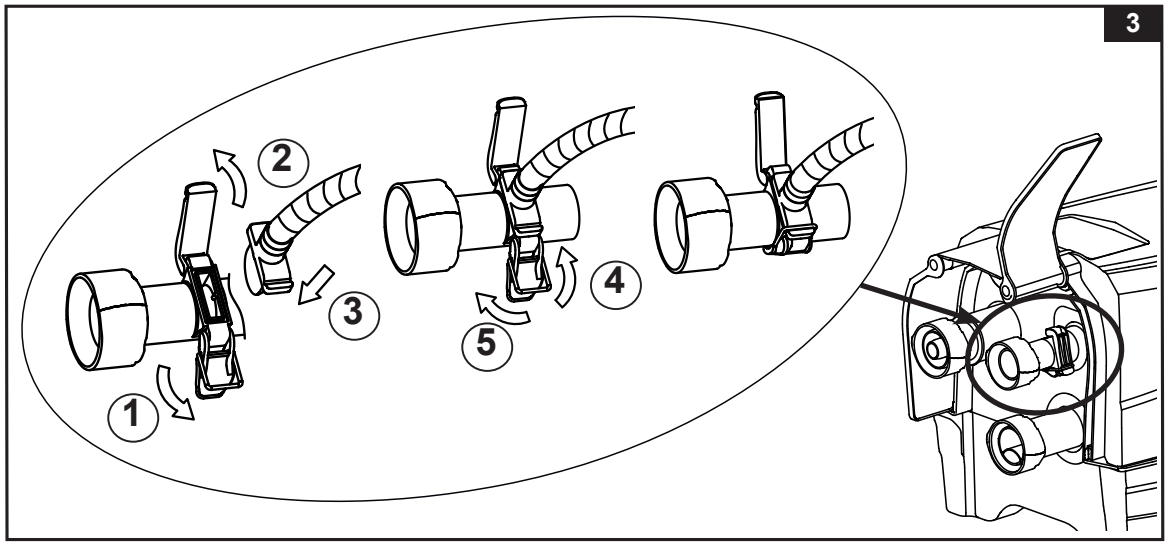

3. Unscrew the air valve cap on the spa tub to reveal the stem in the up position for inflation. Insert the other end of the inflation hose **(7)** into the valve and turn to the right to lock it in position **(see drawing 4)**.

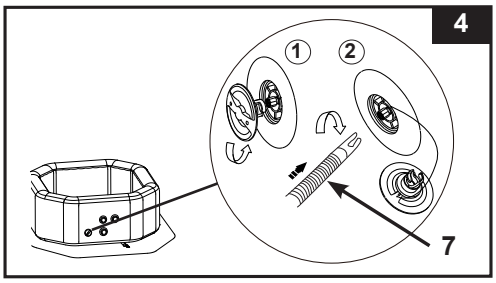

4. Press the button to turn on the control panel.
   Press the button to inflate the spa tub wall for 8 to 10 minutes until it is firm to the touch but not hard **(see drawing 5 & 6)**.
   IMPORTANT: Do not over inflate or use high pressure air compressor to inflate.
5. Press the button again to turn it off.

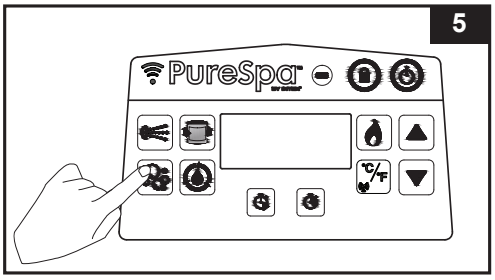

SET UP (continued)

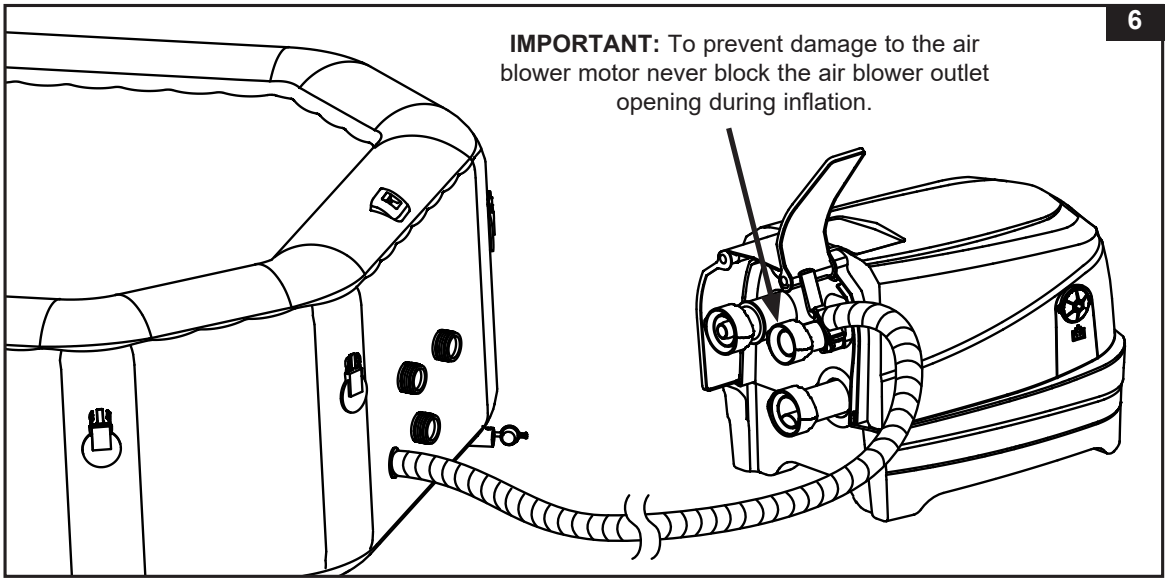

6. Replace the air valve cap back.
   The cap is designed to be screwed on and off. Never exert force as this could cause the complete internal inflation system of the valve to come loose. See "Spa Tub Air Valve Fastening" for valve maintenance.

NOTE: If there is a need to replace the spa tub air pressure release valve core **(5)** due to wear and tear, use the included wrench **(22)** to unscrew the core from the valve base. Insert the replacement core and tighten with the wrench. Make sure the core is securely tightened **(see drawing 7)**.

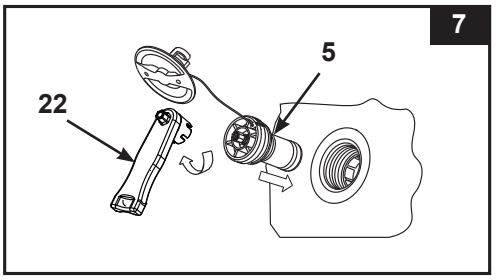

IMPORTANT SETUP NOTICE:
The energy saving cover has two main components: the Outer Foam Filled Cover and the Inflatable Bladder that fits inside the spa.

Inflate the Spa Cover Air Bladder

1. Pull valve cap to open the valve on the SPA inflatable bladder. Insert the inflation hose into the valve. Inflate the bladder until it's firm to touch but not hard **(see drawing 8.1)**.
2. Disconnect the inflation hose **(7)** from the air blower inflation outlet and the valve.
3. Replace the control base inflation latch back; close valve cap securely after inflation.

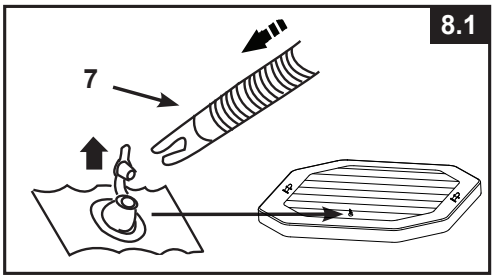

NOTE: If there is a need to add some air to the spa tub wall or spa cover air bladder after they have been setup, refer to above "Inflate the Spa Tub Wall" and "Inflate the Spa Cover Air Bladder" sections. If the spa cover air bladder does not fit into the spa tub due to over inflation, release some air from the bladder until it fits.

SET UP (continued)

Outer Foam Filled Cover:

1. The insulation foam layer inside the Outer Foam Filled Cover is vacuum packed to minimize space during shipping. Unfold the spa cover, open the caps on the two vacuum valves per diagram to allow air into the foam layer. The insulation foam layer will expand as the air flows inside. Once the Energy Saving Spa Cover is fully expanded (around 5-10 minutes), close the vacuum valve caps by pushing down firmly on each cap **(see drawing 8.2)**.
   IMPORTANT: Never attempt to inflate the outer cover using these 2 vacuum valves: the foam will expand on its own. Inflating the outer cover will damage the foam and void the warranty.
2. Insert inflated bladder in the spa tub flush with the top of the tub. Cover the entire spa with the Outer Foam Filled Cover and secure in position with the buckle and strap **(see drawing 8.2)**.
   NOTE: If your Spa Set came with an "**energy saving spa cover**", please ignore the female buckles on the spa tub side wall. These buckles are for the installation of a **regular spa cover** (available separately).

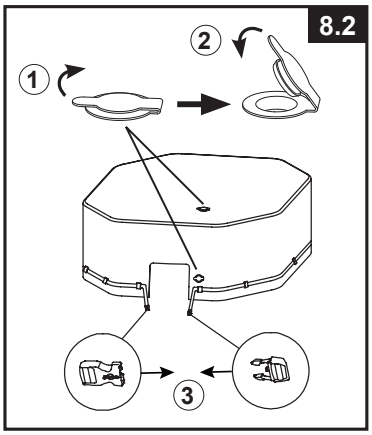

⚠ IMPORTANT

The spa tub inflation/deflation valve incorporates an "air pressure release" function that automatically releases excess air when the spa tub internal pressure is between 1.5 - 2.5 psi (0.103 - 0.172 bar).

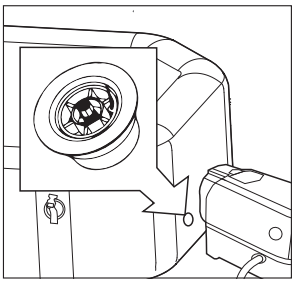

Air pressure release valve.

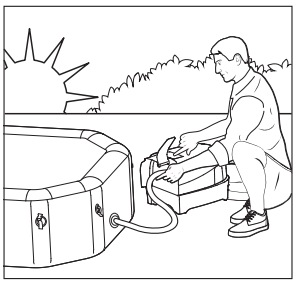

Inflation of spa in the morning.

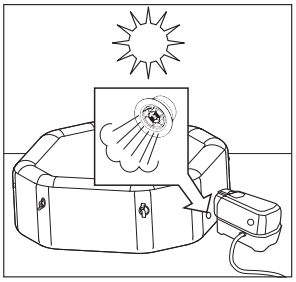

Air expands in the midday heat. Air pressure release valve kicks in and releases excess air.

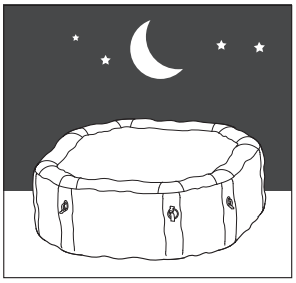

Colder temperatures at night cause the spa to seem less inflated.

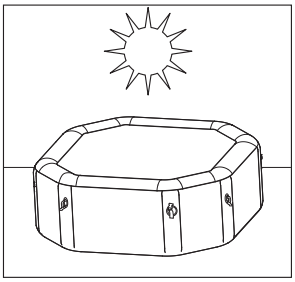

Air expands in the midday heat and correct air pressure is restored.

SET UP (continued)

Deflation

For Spa Tub Wall:

1. Unscrew the cap to reveal the stem, push the stem in and turn 90 degree right to secure it in the down position **(see drawing 9)**.
2. Once the deflation is completed, push the stem in and turn 90 degree left to return it to the inflation position.
3. Replace the cap back.

NOTE: To deflate the spa tub for storage, see "STORAGE" section.

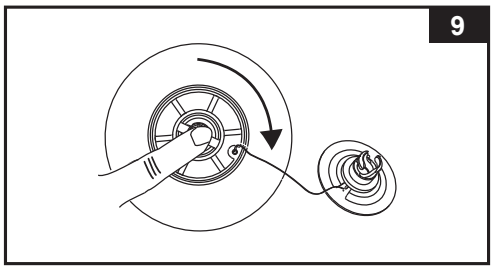

For Cover Air Bladder:

1. Pull valve cap out and squeeze the valve at its base until deflated.
2. Close and recess the valve back.

Spa Control Unit Installation

1. Connect the spa control unit to the spa tub **(see drawing 10)**. Hand-tighten the connectors securely. Do not use tools to tighten.

   CAUTION: Do not sit, lean, cover or place any objects over the spa control unit.

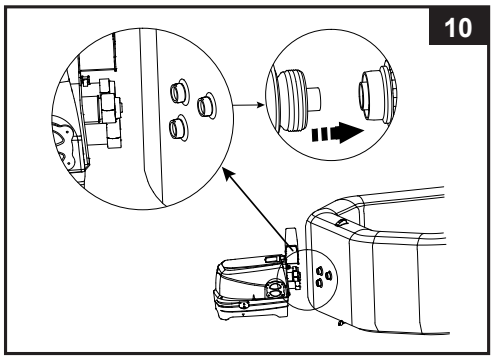

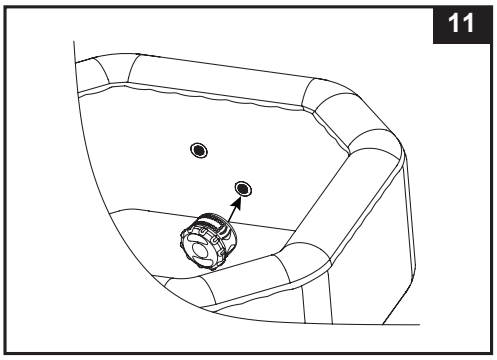

2. Attach the two filter cartridge housing assemblies to the two outlet grids on the inside of the spa. Inflate the spa tub first before installing filter pump fittings.
   ATTENTION! In order to comply with the requirements of the Virginia Grahame Baker Act, suction outlets cannot be covered while the spa is in use. The Act was intended to address high suction/ volume circulation systems but does not exclude low volume systems as used on this spa. Accordingly, remove the filter cartridge assemblies and any other spa cleaning attachment from the spa outlets before spa usage **(see drawing 11)**. Re-attach them after usage for water filtration and cleaning.
3. Before filling with water ensure the bottom drain valve caps are securely closed on the inside and outside.
4. Fill the spa tub with freshwater to a level between MIN and MAX marked on the inside of the spa wall. Do not over fill the spa. Never move the spa tub with water inside and/or with the control base attached to the spa as the spa or control base may be damaged.
   WARNING: Never pour water with a temperature higher than 104°F (40°C) into the spa directly. It is recommended to fill the spa tub with lukewarm water for quick heating and energy saving.
5. Insert inflated bladder in the spa tub flush with the top of the tub. Cover the entire spa with the Outer Foam Filled Cover and secure in position with the buckle and strap.
   IMPORTANT: Inspect the spa cover regularly for premature wear and tear, damage, or signs of deterioration. Never use a damaged spa cover.
6. Ensure that the spa base is plugged into a properly located and sized electrical outlet and press the button to turn on the control panel. Press the button on the control panel to activate the heater, see "Spa Control Panel" operation section.

SALT LEVEL INFORMATION

The spa comes with a built-in saltwater sanitation system. Common salt (sodium chloride) is made up of two elements, sodium and chloride. During the installation of the device, a measured quantity of salt is dissolved in the SPA water to make it slightly salty. The SPA water flows through the sanitation system's electrolytic cell to produce chlorine. The chlorine dissolves in the water and instantly starts destroying bacteria and algae. It also oxidizes all other organic materials.

• Which kind of salt to use:

Use only Sodium Chloride Salts

Use only sodium chloride (NaCl) salt that is at least 99.4% pure. It is also acceptable to use water conditioning salt pellets (the compressed forms of evaporated salt). However, it will take a longer time for them to dissolve. **Do not use iodized salt, salt containing anti-caking agent (E535) or yellow (yellow prussiate of soda) colored salt.** Salt is added to the SPA water and the electrolytic cell uses the salt to create chlorine. The purer the salt the better the performance of the electrolytic cell.

• Optimum Salt Levels

The ideal salt level in the SPA water is between 2000-3000 ppm (parts per million). The optimal level is 2500 ppm.

A too low salt level will reduce the efficiency of the sanitation system and result in low chlorine production. Too high a salt level may damage the power supply and cause corrosion to metal fixtures and accessories.

• Adding Salt

1. Switch the JET pump on to start the water circulation.
2. Keep the sanitation system turned off.
3. Evenly spread 4.4 lbs / 2 kg (for 4 adults') of salt around the inside perimeter of the SPA. For six adults': 5.5 lbs / 2.5 kg of salt.
4. Brush the SPA bottom to speed up the dissolving process. Do not allow salt to pile up on the bottom of the SPA. Run the JET pump for one hour to thoroughly dissolve the salt.
5. When all the salt is dissolved, press the sanitizer button to activate the sanitation system (see "Sanitation System Operating Instructions" section), code "003H" is flashing and set the sanitation system to desired operating hours. **NOTE:** DO NOT press any other buttons on the control panel, and attach the spa cover during the sanitizing process.

• Removing Salt if Salt Level is too high

If too much salt has been added, the unit will beep and display "E92" (see "LED Code Chart"). If this happens, turn off the sanitation system by pressing the ON/OFF button , and unplug the spa. You will need to lower the salt concentration. The only way to do so is to partially drain the SPA and refill it with fresh water. Drain and refill approximately 25% of the SPA water until the "E92" alarm code disappears.

• Adding Salt if Salt Level is too low

If not enough salt has been added, the unit will beep and display "E91" (see "LED Code Chart"). If this happens, turn off the sanitation system by pressing the ON/OFF button , unplug the spa and wait 10 seconds. Plug and turn on the spa, add 1.1 lbs / 0.5 kg increment of salt until the "E91" alarm code disappears (see "Adding Salt" section).

OPERATION

SPA CONTROL PANEL

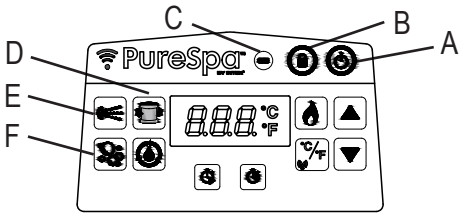

A: On/Off Button
B: Lock/Unlock Button
C Control Panel Battery Indicator
D: Water Filter Button
E: Water Jet Button
F: Bubble Button

On/Off Button: Once the unit is plugged in, press this button to active the control panel buttons. Press this button again to turn off all currently activated functions.

Lock/Unlock Button: Press and hold this button 3 seconds to lock/unlock the control buttons. If you forget to lock the keypad controls, the system will automatically lock it after 30 minutes of inactivity. The icon on the display is red when locked.

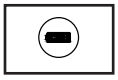

Control Panel Battery Indicator: The battery indicator will turn green when it is fully charged; turn red when it requires charging and flashing red when it is in charging mode.

Water Filter Button: This button turns the filter pump on and off. The water filter icon on the display is green when activated and flashing 002H which is the minimum preset operating hours. Press again to increase the preset time from 002H, 004H to 006H. Pressing the button after the maximum number of hours (006H) will turn off the filter pump and the LED display shows the spa water temperature. If you have selected too many hours keep pressing to repeat the cycle. Once the operating time is set, the LED display will stop flashing after 10 seconds and the filter pump starts working. The cycle repeats itself at the same time each day for the number hours selected.
If the heating system is activated it will override the filter pump preset time function. To view the preset time while the filter pump is operating, press button, the display will briefly flash the preset hours for 10 seconds and then display back the remaining operating hours. To adjust the preset time, press button twice until the display is flashing and repeat previous steps.
NOTE: The built-in hard water treatment function works automatically in conjunction with the filtration system.

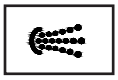

Water Jet Button: Use this button to activate the jet massage system. After 30 minutes of continues use, the jet massage system will automatically turn off. The water jet icon on the displays is green when activated. The angle of the water jet nozzles inside the spa tub wall can be adjusted manually.

CAUTION: Do not run jet system when the cover is attached, air pressure may accumulate inside the spa and cause irreparable damage and bodily harm.

Bubble Button: Use this button to activate the massage system, which has a 30-minute auto-shutoff feature. The bubble icon on the displays is green when activated.

CAUTION: Do not run Bubble system when the cover is attached, air can accumulate inside the spa and cause irreparable damage and bodily harm.

OPERATION (continued)

SPA CONTROL PANEL

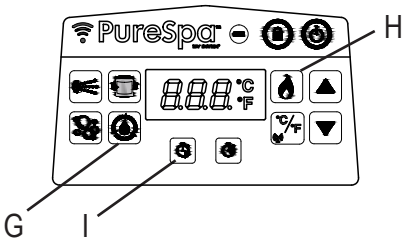

G: Sanitizer Button
H: Heat Button
I: Heater Start Timer (HST) Button

Sanitizer Button: Use this button to activate and set operating hours for the sanitation system.

Heat Button: Press this button to activate the heating system. Press ▲ or ▼ to set the desired water temperature. The heater will continuously heat until the water temperature reaches the set temperature and then hold at that temperature. This is achieved by the heater restarting automatically whenever the water temperature drops 1.8-3.6°F (1-2°C) below the set temperature. When the flame icon on the display is red, the heating system is activated. When the flame icon turns green, the water is at the set temperature. The heating system is then at rest, but the filtration system will continue circulating water nonstop, unless manually turned off. If the heating system is reactivated, the filter pump will restart at the same time.

NOTE: To stop the filtration system while the heater is at rest mode, press the flame button first and then the filter button. Pressing the heat button only while the heater is at rest mode will turn off the heating system only and the filtration system will operate for 1 more minute before it turns off or continue with the filter pump preset operating hours. To turn the heater off while heating, press the flame button.

IMPORTANT: The following conditions will lead to slow water heating:

- The ambient temperature is lower than 50ºF (10ºC).
- Outdoor wind speed is above 8-12 mph (3.5-5.4 m/s).
- The jet or bubble function is activated when heating the spa water.
- The spa is not properly covered with the spa cover when the water is heating.

Heater Start Timer (HST) Button: Use this button to select a future start time for the heating system. Press this button and then press ▲ or ▼ to set the number of hours by which you wish to delay the start of the heating system, from 000 to 120 hours. The icon will flash red for a few seconds and then stays red. The information shown on the LED display alternates between the remaining hours before heater start and the water temperature. Once the countdown timer reaches 000, the heating system will start operating. To deactivate the function at any time, simply set the HST time back to 000. To readjust the preset hours, press the HST button twice and adjust the hours with ▲ and ▼ buttons.

Example 1: It is 9:00pm Monday evening and you would like the spa to be hot on Friday evening. Allowing for 24 hours for the spa to heat up (4 persons model about 3-4.5ºF (1.5-2.5ºC) per hour) the heater should be set to start on Thursday evening. With the Spa turned on, first press the Heat button and set your desired temperature. Press the HST button and then ▲ or ▼ until 072 hours is shown. The heater will start after 72 hours has passed (Thursday at 9:00pm) and will run until the desired temperature is attained. The heater will then cycle on and off to maintain the set temperature until turned off. To turn off the heater, press the flame button.

OPERATION (continued)

SPA CONTROL PANEL

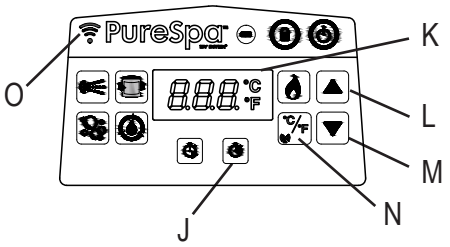

J: Heater Duration Timer (HDT) Button
K: LED Display
L: Increase Button
M: Decrease Button
N: Celsius/Fahrenheit Toggle and Pairing Button
O: WiFi LED Indicator

Heater Duration Timer (HDT) Button: Use this button to select the desired length of time the heating system should operate. Press this button and then press ▲ or ▼ to set the number of hours you wish the heater to operate before it automatically turns off, from 000 to 048 hours. The icon will flash red for a few seconds and then stays red. The heating system will operate for the amount of preset hours only. The timer takes priority over temperature, so the heater will shut off when HDT time runs out regardless if the preset spa water temperature is reached or not. During the HDT function, the information shown on the LED display alternates between the remaining heater operating hours and the water temperature. Repeat previous steps to reprogram this function. To deactivate the function at any time, simply set the HDT time back to 000. To readjust the preset hours, press the HDT button twice and adjust the hours with ▲ and ▼ buttons.

Example 2: Using the same scenario as example 1 above but rather than manually turning the heater off when you are finished, you would like the heater to turn off automatically on Saturday evening at 9:00pm. After going through the steps in example 1, press the HDT button and then the ▲ or ▼ button to select 048 hours. The heater will then run from Thursday at 9:00pm to Saturday at 9:00pm.

NOTE: If HST and HDT timers are both set, the LED display will first alternate between remaining time before the heater start and the water temperature, until HST timer runs out and the heater activates. Then the LED display alternates between remaining HDT time and water temperature until the HDT timer runs out as well.

LED Display: Once plugged in the LED displays the current water temperature automatically.
If the control panel **(3)** is activated and away from the control base charging dock, the LED display will go blank after 5 minutes. Press any button to resume the control panel.
Always check the control panel battery indicator. Recharge the control panel after each use.

Adjustment Buttons: Press the increase or decrease buttons to adjust the desired function settings. Press and hold the button will rapidly increase or decrease the numbers.

Celsius/Fahrenheit Toggle Button: The temperature can be displayed in either Fahrenheit or Celsius. The system's default is Celsius.
NOTE: The default temperature is 68°F (20°C). Temperature adjustment ranges from 50°F (10°C) to 104°F (40°C). To change temperature unit on your mobile device App screen, touch the current temperature number shown on the App screen to switch between (°C / °F).

Pairing Button: Touch this button for 5 seconds to begin spa pairing with your mobile device.

WiFi LED Indicator Status:

- **ON/Solid**: The product is paired up and connected to the home WiFi signal successfully.
- **Flashing**: Pairing mode stage.
- **OFF/Blank:** Disconnected or not connected to the home WiFi signal. Touch the pairing button for about 5 seconds to repeat the pairing process. If the problem still persists, check the "Troubleshooting" section for more details.

OPERATION (continued)

IntexLink App Setup User Guide
The IntexLink App allows you to turn on/off any function on your spa, and program a schedule for future use remotely even when not at home from your mobile device.

WiFi APP QR Code

System and WiFi Router Requirement
The Spa control base hardware communicates via Bluetooth and 2.4GHz WiFi network supporting 802.11b/g/n wireless technology. The hardware **does not support 5GHz WiFi** networks. It is recommended that you turn off your 5GHz WiFi network during the App setup and pairing process.

WiFi Pairing
For a successful first time WiFi pairing between the spa wireless control panel and your mobile device, make sure:

- To turn on the "**Bluetooth**" function on your mobile device and allow "**Nearby Devices**" permission (IntexLink App info → App permissions → Nearby devices → Allow).
- To turn on "**Location access**" on your mobile device.
- To keep the wireless control panel on the spa control base charging dock.
- The area where the spa will be installed is within your WiFi router coverage range. The area shall be free from metallic walls/mesh and other objects that may interfere with or reduce the WiFi signal.
- Turn off the mobile data (2G, 3G, 4G and LTE) function on your mobile device first, and make sure your mobile device is connected to your WiFi router before pairing the device with the spa control panel. Check the WiFi signal strength is full by browsing the internet with your mobile device using the connected WiFi network and ensure the webpage loading speed is fast.
- Follow below step-by-step sequence.

1) Scan the WiFi App QR code located on the control base rating label or on this manual to install the App. You may also download the "IntexLink App" from your App store.
2) Touch the ⏻ power button on the spa control panel to turn on the spa and make sure the spa control base is powered on.
3) Open the App, create a new account (for first time user) and login into the App.
4) Touch the °C/°F pairing button on the spa control panel for 5 seconds until a "beep" sound is heard. The WiFi LED indicator will flash to begin pairing with your mobile device.
5) Touch the "**Add Device**" or " ⊕ " button on the App to search for nearby devices.
6) Touch the Spa icon to be added or paired up with.
7) Choose your wireless router and enter the WiFi router password, then touch "**Next**" to begin pairing.
8) Once the Spa is added successfully, the pairing is completed. Touch the "Done" button to begin using the IntexLink App.

How to share your product / device:
Open the App, touch the "Spa" icon, touch the setting (⚙) icon on the top right corner and then touch "Share Device".

OPERATION (continued)

Heater Function Setting Examples			
Temp set at (ºC/F)	HST	HDT	Action
40/104	000H	000H	HST & HDT functions are off. Heating system has to be activated manually by pressing ( ) button. See "Spa Control Panel" section for details. The heater will continuously heat until the temperature is reached and then hold at that temperature.
40/104	000H	005H	Turn the heater on and set a run time at which point the heater will turn itself off. The heater will continuously heat until the temperature is reached and then hold at that temperature until the 5 hours run time has expired, regardless if the water temperature has reached 104°F/40°C or not.
40/104	012H	005H	Turn the heater on some time into the future to a set temperature and set a run time at which point the heater will turn itself off. The heater will start after 12 hours and continuously heat until the temperature is reached and then hold at that temperature until the 5 hours run time has expired, regardless if the water temperature has reached 104°F/40°C or not.
40/104	012H	000H	Turn the heater on some time (in hours) into the future to a set temperature. The heating system will start after 12 hours, and continuously heat until the water reaches 104°F/40°C and then hold at that temperature. When the spa water temperature drops 1.8-3.6°F (1-2°C) below the set temperature the heating system will restart. When the flame icon on the display is red, the heating system is activated. When the flame icon turns green, the water is at the set temperature. The heating system is at rest and the filtration system will continue working nonstop.

Freeze Protection: the spa heater is programed to automatically heat the water if the water temperature falls below 39°F (4°C). While the spa should be stored during the winter months, the system will protect the internal components in the event of occasional freezing temperatures. The spa must be plugged in and the GFCI/RCD reset. The system will engage the filter pump along with the heater and will operate both until the water reaches 50°F (10°C).
If extended freezing weather is expected, please disassemble the spa and store it during winter according to the storage instructions.
Once the self-heating program is triggered, it cannot be switched off on the control panel until the water temperature has reached at least 41°F (5°C), unless it is unplugged.

OPERATION (continued)

FUNCTION	ON	OFF	Information shown on LED display alternates between
	✓		Remaining filter pump time and water temperature
		✓	
		✓	
	✓	✓	Remaining HST time and water temperature
	✓		
		✓	
	✓	✓	Remaining HST time and water temperature first. Then remaining HDT time and water temperature.
	✓		
	✓		
	✓	✓	Remaining HDT time and water temperature
		✓	
	✓		
	✓		Water temperature and remaining sanitation time
	✓		
		✓	Water temperature and remaining sanitation time
	✓		

Due to power limitation the following functions can be activated together at the same time:

Filter Pump	Heater	Air Bubble	Sanitizer	Water Jet
✓	✓	X	X	X
✓	X	✓	✓	X
✓	X	X	✓	✓

Note: ✓= can be activated at the same time; X = cannot be activated at the same time.

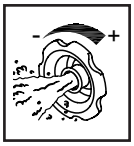

Jet Nozzle Adjustment
The amount of water and pressure coming out from the jet nozzles can be adjusted by turning the jet nozzle rim clockwise (maximum water output), counterclockwise (low water output) or anything in between.
Closing one or 2 jet nozzles will divert more water pressure to the other jet nozzles.

NOTE: Keep the spa control panel within 5m (16ft) range of the control base to ensure good wireless transmission signal.

SANITATION SYSTEM OPERATING INSTRUCTIONS

The spa control panel is resistant to water, but it is not designed to be completely submerged. Do not put the control panel in the water. Submersion could cause water to enter the panel causing damage to the electronics.

1. **Activate the sanitation system:**
   Press the sanitizer button on the control panel, this will activate the sanitation system as well as the filter pump. The sanitizer icon and the filter icon turn green. Flashing code "003H" appears on the control panel's LED, indicating that the unit is ready to be programmed.

2. **Set operating hours for the sanitation system:**
   With the minimum preset hours (code "003H") flashing, press the sanitizer button to increase the time from 003H, 005H to 008H hours (see "LED CODE CHART" section). Pressing the button after the maximum number of hours (code "008H") will deactivate the sanitation function and the LED panel will display the spa water temperature. If you have selected too many hours keep pressing to repeat the cycle. Once the operating time is set, the display LED panel will stop flashing after 10 seconds and the sanitation system starts working. For first time use of the spa, set the operating hours to "008H". During the sanitation, the information displayed on the LED panel alternates between the spa water temperature and the remaining hours of sanitation.

   After the cycle is completed the LED panel displays the water temperature. Test the water with the included test strips, and make sure the free chlorine level is between 2-4 ppm.
   Note: DO NOT press any other buttons on the control panel, and attach the spa cover during the sanitizing process.

3. **Readjust operating time if necessary:**
   During the sanitizing process, the operating hours can be re-adjusted if necessary. Press the sanitizer button, the LED code "003H" will flash. Repeat step 2.

4. **Turn off the sanitation system manually if necessary:**
   During the sanitizing process, you can turn off the sanitation system manually. Simply press the ON/OFF button on the control panel. The sanitation system will stop and the sanitizer icon light will disappear.

5. **Restart the sanitation system:**
   When the programmed cycle ends, the LED panel displays the water temperature, the unit will stop sanitizing and the sanitizer icon light disappears. To restart the sanitation system, following the above steps.

6. **Test the SPA water regularly:**
   The free chlorine level in the SPA water may vary depending on the number of occupants, local water condition and sunlight intensity exposure (outdoor use). During the initial use of the spa, test the spa water at least 2 times per day with the included test strips to maintain the free chlorine between 2-4 ppm. After the free chlorine level appears to be stabilized, test the SPA water every week to maintain optimal sanitizing level.

Note: Flush all pipes with treated water by activating the bubble and jet functions for an hour a day.

LED CODE CHART

LED Reading	Definitions
001H	Operating Hour (1 hour remaining)
002H	Operating Hours (2 hours remaining)
003H	Operating Hours (3 hours remaining)
004H	Operating Hours (4 hours remaining)
005H	Operating Hours (5 hours remaining)
006H	Operating Hours (6 hours remaining)
007H	Operating Hours (7 hours remaining)
008H	Operating Hours (8 hours remaining)
E81	Transmission signal failure
E90	No water flow
E91	Alarm Code (Low Salt Level)
E92	Alarm Code (High Salt Level)
E94	Water temperature too low
E95	Water temperature too high
E96	System Error
E97	Dry-fire Protection
E99	Water temperature sensor broken
END	After 72 hours of continuous heating operation, the pump will hibernate automatically. The rapid heating function is disabled.
BLANK	Control panel battery has no power, place the control panel back on the control base charging dock to charge the battery and reactivate.

⚠ WARNING

NEVER use the spa if indicated water temperature is more than 104ºF (40°C).

MAINTENANCE AND CHEMICALS

⚠ WARNING

Always unplug this product from the electrical outlet before removing, cleaning, servicing or making any adjustment to the product.

Water Sanitation

The spa owner must regularly check and keep the spa water sanitized with scheduled maintenance (daily, if necessary). Adding sanitizer and other chemical will control bacteria and viruses present in the spa water. The maintenance of a proper water balance through appropriate use of sanitizers is the single most important factor in maximizing the life and appearance of the spa tub as well as ensuring clean, healthy and safe water. Proper technique is important for water testing and treating the spa water. See your pool/spa professional for chemical, sanitizer, test kits and testing procedures questions.
CAUTION: ALWAYS FOLLOW THE CHEMICAL MANUFACTURER'S DIRECTIONS, AND THE HEALTH AND HAZARD WARNINGS.

Do not add chemicals if the spa is occupied. This can cause skin or eye irritation. Concentrated chlorine solutions can damage the spa tub. In no event is Intex Recreation Corp., Intex Development Co. Ltd., their related companies, authorized agents and service centers, retailers or employees liable to the buyer or any other party for costs associated with the loss of spa water, chemicals or water damage.

SPA WATER CHEMISTRY AND BALANCE

Preferred Water Chemistry Reading			
	Minimum	**Ideal**	**Maximum**
Free Chlorine	2 ppm	2 - 4 ppm	5 ppm
pH	7.2	7.2 - 7.6	7.8
Total Alkalinity (TA)	60 ppm	80 ppm	120 ppm
Calcium Hardness ($CaCO_3$)	100 ppm	150–250 ppm	350 ppm
Saturation Index (SI)	–0.3	0	+0.3
Water Temperature	20ºC / 68ºF	20–40ºC / 68–104ºF	40ºC / 104ºF

Free chlorine: is the chlorine residual present in the spa water.
Result if too low – Inadequate level of disinfection.
Result if too high – cause odor problem, skin & eye irritation, corroded metals and other materials.

pH: a value that indicates how acidic or basic the spa water is.
Result if too low – Corroded metals, eye & skin irritation, and destruction of total alkalinity.
Result if too high – Scale formation, cloudy water, shorter filter/heater runs, eye & skin irritation, poor chlorine efficiency.

Total Alkalinity (TA): indicates the degree of the water's resistance to pH change. It determines the speed and ease of pH change, so always adjust total alkalinity before adjusting the pH level.
Result if too low – Corroded metals, eye & skin irritation. Low alkalinity will cause the pH to be unstable.
Result if too high – Scale formation, cloudy water, shorter filter/heater runs, eye & skin irritation, high chlorine demand.

SPA WATER CHEMISTRY AND BALANCE (continued)

Calcium Hardness ($CaCO_3$): refers to the amount of calcium and magnesium dissolved in the water.
Result if too low – Difficulty balancing water, corrosion of metal components, eye & skin irritation and water foaming.
Result if too high – Scale formation, cloudy water, eye & skin irritation, difficulty balancing water and filter/ heater inefficiency.

Saturation Index (SI): temperature, calcium hardness concentration, total alkalinity and pH represent the main factors influencing scale formation. The tendency of water to either form scale or corrode is indicated by the Saturation Index (SI):

SI = pH+TF+CF+AF-12.1

*Where: TF = Temperature Factor; CF = Calcium Hardness Factor; AF = Total Alkalinity Factor

Water Temperature		TF	Calcium Hardness (ppm)	CF	Total Alkalinity (ppm)	AF
(ºC)	(ºF)					
8	46	0.2	75	1.5	50	1.7
12	54	0.3	100	1.6	75	1.9
16	61	0.4	150	1.8	100	2.0
19	66	0.5	200	1.9	150	2.2
24	75	0.6	250	2.0	200	2.3
29	84	0.7	300	2.1	300	2.5
34	93	0.8	400	2.2	400	2.6
40	104	0.9	500	2.3	--	--
--	--	--	1000	2.6	--	--

Test the water pH, Temperature, Calcium Hardness and Total Alkalinity levels. Use the equivalent Factors in the SI equation.
SI = 0, Balance
If SI > 0, Scaling or cloudy water condition.
If SI < 0, Corrosive to metals or eye & skin irritating condition.
The SI is considered satisfactory if the value is within -0.3 to +0.3 range. Zero being perfect.

SPA Water Adjustment

How to adjust the spa water chemistry when the levels are off the range.
CAUTION: Always follow the chemical manufacturer's directions, and the health and hazard warnings.

Total Alkalinity (TA) Adjustment

Remove the spa cover to aerate the water and use the included test strips to check the chemistry level.
Ensure the chlorine level in the water is between 2-4 ppm first, as chlorine will affect the TA test result.
If the TA level (and not the pH) is higher than 120 ppm, to lower the TA level, you add muriatic acid (hydrochloric acid) or sodium bisulfate.
If the TA level is lower than 60 ppm, you add sodium bicarbonate.
For example (for 4 adults'), if the TA level is 180 ppm, the desired decrease is 60 ppm, from below chart, you need to add 0.269 Lb (121 g) of sodium bisulfate or 0.101 qt (96 ml) of muriatic acid.

If the test strip color is between 180 ppm and 240 ppm, and close to 180 ppm, you can also add 0.269 Lb (121 g) of sodium bisulfate or 0.101 qt (96 ml) of muriatic acid.

If the reading is more than 240 ppm, you can add sodium bisulfate or muriatic acid to the water drop by drop until the test strip indicates a 240 ppm reading, then add 0.528 Lb (238 g) of sodium bisulfate or 0.202 qt (192 ml) of muriatic acid.

NOTE: After adjustment, retest the water after 24 hours and adjust again if necessary.

SPA WATER CHEMISTRY AND BALANCE (continued)

Lowering Total Alkalinity

Amount of Sodium Bisulfate to lower Total Alkalinity

Desired level	60 ppm	80 ppm	100 ppm	120 ppm	140 ppm
Volume: 210 gal / 795 L	0.269 Lb	0.358 Lb	0.448 Lb	0.528 Lb	0.627 Lb
	121 g	161 g	202 g	238 g	283 g
Volume: 290 gal / 1098 L	0.368 Lb	0.492 Lb	0.614 Lb	0.737 Lb	0.860 Lb
	168 g	224 g	279 g	335 g	391 g

Amount of Muriatic Acid to lower Total Alkalinity

Desired level	60 ppm	80 ppm	100 ppm	120 ppm	140 ppm
Volume: 210 gal / 795 L	0.101 qt	0.135 qt	0.169 qt	0.202 qt	0.234 qt
	96 mL	128 mL	160 mL	192 mL	223 mL
Volume: 290 gal / 1098 L	0.139 qt	0.185 qt	0.232 qt	0.278 qt	0.324 qt
	132 mL	176 mL	220 mL	264 mL	308 mL

(Muriatic acid: 31.45%)

Raising Total Alkalinity

Amount of Sodium Bicarbonate to raise Total Alkalinity

Desired level	20 ppm	40 ppm	60 ppm	80 ppm
Volume: 210 gal / 795 L	0.059 Lb	0.118 Lb	0.178 Lb	0.237 Lb
	27 g	53 g	80 g	107 g
Volume: 290 gal / 1098 L	0.081 Lb	0.162 Lb	0.244 Lb	0.326 Lb
	37 g	74 g	111 g	148 g

pH Adjustment

After the total alkalinity has been lowered to 120 ppm or raised to 80 ppm and the pH is still high or low, you can adjust it using the following chart.

Lowering pH

Lowering pH Using Muriatic Acid

Volume		210 gal (795 L)		290 gal (1098 L)	
Total Alkalinity		120 ppm	80 ppm	120 ppm	80 ppm
From→To	8.4→7.2	0.028 qt	0.018 qt	0.038 qt	0.025 qt
		26 mL	18 mL	36 mL	24 mL
	7.8→7.2	0.019 qt	0.013 qt	0.026 qt	0.017 qt
		18 mL	12 mL	22 mL	16 mL

Lowering pH Using Sodium Bisulfate

Volume		210 gal (795 L)		290 gal (1098 L)	
Total Alkalinity		120 ppm	80 ppm	120 ppm	80 ppm
From→To	8.4→7.2	0.071 Lb	0.047 Lb	0.095 Lb	0.063 Lb
		32 g	21 g	43 g	29 g
	7.8→7.2	0.047 Lb	0.032 Lb	0.064 Lb	0.043 Lb
		21 g	14 g	29 g	20 g

SPA WATER CHEMISTRY AND BALANCE (continued)

Raising pH

Raising pH Using Sodium Bicarbonate

Volume		210 gal (795 L)		290 gal (1098 L)	
Total Alkalinity		120 ppm	80 ppm	120 ppm	80 ppm
From→To	6.8→7.2	0.541 Lb	0.361 Lb	0.737 Lb	0.491 Lb
		243 g	163 g	335 g	224 g

Calcium Hardness Adjustment

Use the included test strips to check the water hardness level and adjust it following below chart.

Lowering Calcium Hardness

If your household water supply is treated with a softener, mix the spa hard water with the soft water according to the water volume ratio chart to lower the calcium hardness:

Lowering Calcium Hardness Using Soft Water

Initial level	1000 ppm	500 ppm	350 ppm	250 ppm
Desired level: 100 ppm	Water Volume Ratio **(Vhard water:Vsoft water)**			
	1:9	1:4	2:5	2:3

Raising Calcium Hardness

If the calcium hardness level in the spa water is lower than 100 ppm, add calcium chloride into the spa water.

Volume	210 gal (795 L)		290 gal (1098 L)	
m ($CaCl_2$)	0.197 Lb	89 g	0.269 Lb	122 g

⚠ WARNING

Muriatic acid is a caustic chemical and liquid solution of sodium bisulfate ($NaHSO_4$) is highly acidic. Handle all chemicals with care and wear extra personnel protective equipment including goggle and gloves. It is very important not to splash acid onto your skin or clothing, or into your eyes.

MAINTENANCE

Maintenance of Spa Water and Cartridge

Protect all the spa occupants from possible water-related illnesses by keeping the spa water clean and sanitized. Always practice good hygiene. To ensure proper spa water quality follow these procedures:

1. Inspect and clean the filter cartridge once a week, and change the filter cartridge as needed.
   - **a.** Unscrew the cartridge housing assembly from the spa tub wall and remove the cartridge **(see drawing 12)**.
   - **b.** Use a garden hose to rinse off the cartridge. If the cartridge remains soiled and discolored it should be replaced. Keep spare cartridges on hand.
   - **c.** Reinstall the clean cartridge back into the cartridge housing and replace the cartridge housing assembly back onto the spa tub wall.
2. Change the spa water every 2~3 months, or it becomes cloudy and proper water chemistry does not clear it up. See "Spa Tub Drainage" and "Spa Tub Cleaning" sections for details.
3. Use spa chemicals to maintain proper water chemistry. Spa damage resulting from misuse of chemicals and mismanagement of spa water is not covered by the warranty.
4. All occupants must shower before entering the spa.

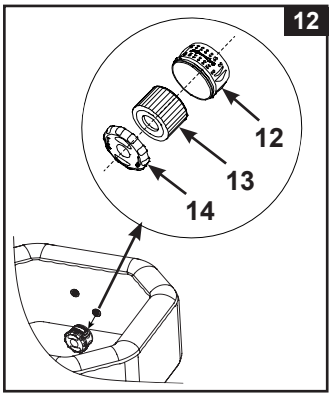

IMPORTANT

Unplug the power cord before cleaning the system. Cover the water inlet and outlet with the plugs to prevent water spillage. After completing all maintenance tasks, you must plug the power cord back in and remove the plugs.

Electrolytic Cell Cleaning

The electrolytic cell has a self cleaning function incorporated into the electronic control's programming. In most cases this self cleaning action will keep the cell working at optimum efficiency. In some regions, the SPA water is hard (high mineral content) which varies depending on the local water condition, this would cause deposits on the titanium plate and affect the sanitizing efficiency, so the cell may require periodic manual cleaning. To maintain maximum performance, we recommend that you open and visually inspect the electrolytic cell every two weeks for SPA water (Calcium hardness < 100 ppm) or weekly for SPA water (Calcium hardness > 350 ppm).
The following steps provide instructions on how to clean the cell.

Inspection and cleaning:

1. Turn off the spa and unplug the power cord from the electrical socket.
2. Unscrew the filter cartridge assembly from the spa tub wall, and use the included plugs **(15 & 23)** to cover the water inlet and outlet fittings from inside of the spa tub to prevent water from flowing out. Disconnect the spa control unit from the spa tub and use the included plugs to cover the water inlet and outlet fittings from outside of the spa tub to prevent water from flowing out.
3. Remove the four screws from the transparent cover using a Phillips screwdriver (not included) and remove the cover from the spa control unit.

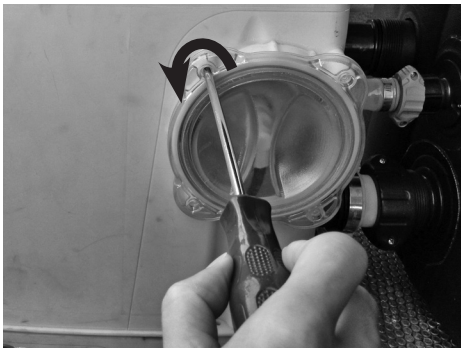

MAINTENANCE (continued)

4. Unplug the electrolytic cell cord. Unscrew the electrolytic cell nut in a counter-clockwise motion using the included electrolytic cell nut wrench **(20)**.

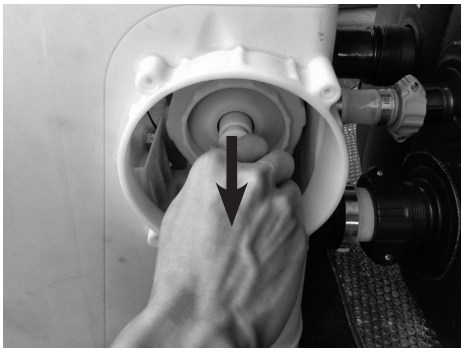

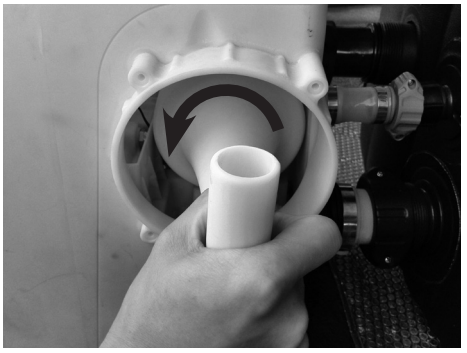

5. Pull out the electrolytic cell and place it in a container, pour kitchen grade vinegar into the container to soak the titanium plate for about one hour until no deposits remain.

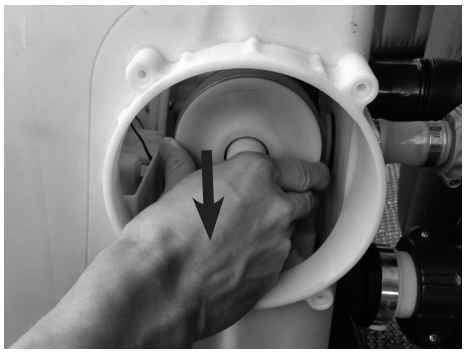

6. Remove the electrolytic cell and flush the titanium plate with fresh water. Be careful: Keep the electrolytic cell receptacle completely dry, do not let it come into contact with the vinegar and water.
7. Reverse the above steps to reinstall the electrolytic cell.
   NOTE: Ensure the notch on the electrolytic cell is aligned with the ridge on the electrolytic cell housing.

INTEX® TEST STRIPS (PACKED WITH THE PRODUCT)

The Test Strips can test the "Free Chlorine", "pH", "Total Alkalinity" and "Calcium Hardness" levels at the same time. We recommend that you test the water chemistry weekly, and maintain the chlorine concentration at 2-4 ppm.

Directions and Use

1. Dip the entire strip into the water and remove immediately.
2. Hold the strip level for 15 seconds. Do not shake excess water from the strip.
3. Now compare the strip pad to the color chart on the packaging label. If necessary, adjust the chemical level in the spa water. It is very important, to use the proper technique when testing the water's chemical level. Read and follow the written strip instructions carefully.

MAINTENANCE (continued)

Spa Tub Drainage

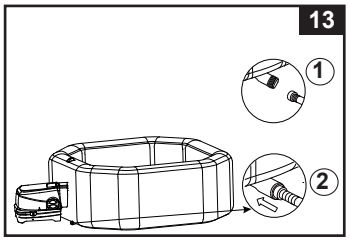

1. Turn off and unplug the spa control unit.
2. Remove the drain valve cap from outside of the spa tub and attach a garden hose, point the other end of the garden hose to a suitable draining area **(see drawing 13)**.
3. From inside of the spa tub, open the drain valve cap, water will start flowing out from the garden hose.
4. When the water stops draining, disconnect the spa control unit from the spa tub wall. Lift the spa tub wall from the side opposite the drain, leading any remaining water to the drain and emptying the spa completely **(see drawing 14)**.
5. Turn over the spa tub to empty any remaining water **(see drawing 15)**.
6. Use a clean towel to wipe up any remaining water and moisture on the spa tub and spa control unit.
7. Ensure the spa tub and spa control unit are thoroughly dried.
   NOTE: The enclosed plugs **(15 & 23)** can be used to cover the water inlet and outlet connectors from the inside of the spa tub to prevent water from flowing out.

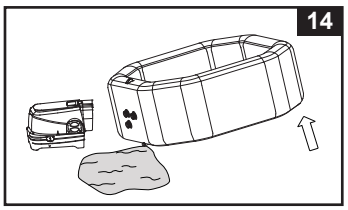

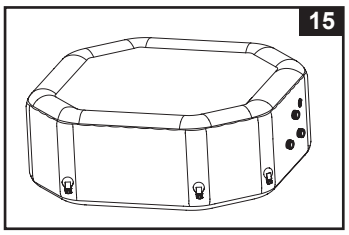

Spa Tub Cleaning

If dirt is visible in the water or water becomes cloudy and proper water chemistry does not clear it up, change the water and clean the spa tub. See "Spa Tub Drainage" section on how to drain the spa.
While empty, remove the cartridge housing from inside of the spa tub wall, clean and/or replace the filter cartridge. Use a sponge and mild soap solution to wipe away any soil or stains on the inside of the spa wall. Rinse thoroughly before refilling with clean water.
IMPORTANT: Do not use steel wool, hard brushes or abrasive cleaners.

Spa Tub Air Valve Fastening

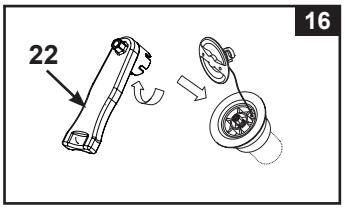

Check the spa tub air valve for leakage and tightness before use. If air is leaking from the air valve, use the provided wrench **(22)** to tighten the air valve as follow:

1. Make sure the spa tub is deflated, open the air valve cap and insert the wrench **(22)** into the air valve body **(see drawing 16)**.
2. With one hand, hold the backside of the air valve base from the inside of the spa tub wall and turn the wrench **(22)** clockwise.
   IMPORTANT: Never adjust the air valve base when the spa is in use or filled with water. Only use the air valve wrench if the air valve is loose or there is leakage around air valve base. Do not over tighten the air valve: over tightening can damage the valve. Just ensure the air valve is snug and not leaking.

Spa Cover

The attachment buckles of the cover are locking buckles. Two keys are provided in the plastic bag with the manual and other accessories. Each buckle is marked with "locked" and "unlocked" symbols for easy operation: put the key into the slot on the buckle and turn it to the appropriate position to lock or unlock the buckle respectively.
To assure safety from unauthorized access, always put the cover on when spa is not in use and lock all buckles. Always keep the keys out of reach of children. In case you misplace the keys, you can use any similar size flat screwdriver to lock or unlock the buckles.
Inspect the spa cover regularly for premature wear and tear, damage, or signs of deterioration. Never use a worn or damaged cover: it will not provide the level of protection required to prevent unsupervised access to the spa by a child.

MAINTENANCE (continued)

Spa Tub and Cover Air Bladder Repair

Use the enclosed repair patch to repair any puncture:

- Clean and dry the area to be repaired thoroughly.
- Remove the patch backing paper and press patch firmly over the puncture. Smooth out the surface to remove any air bubbles under the patch.

STORAGE

In regions subject to freezing temperatures, drain, clean, disassemble and properly store the spa set and related components indoors when the temperature drops below 39°F (4°C).

1. Drain and clean the spa following the "Spa Tub Drainage" and "Spa Tub Cleaning" sections.

2. Reverse set up instructions to deflate and disassemble the spa tub, spa control unit and spa cover air bladder.

3. To deflate the tub and the cover air bladder:

a) Open the deflation outlet cap **(34)** with the included wrench **(22) (see drawing 17)**.

b) Insert deflation hose adaptor **(35)** into the deflation outlet.

c) Insert inflation hose **(7)** over the deflation hose adaptor **(35)**.

d) Insert the other end of the inflation hose into the tub air valve or cover air bladder valve.

e) Press the air bubble button to deflate.

f) When deflation is completed reverse above steps and ensures the deflation outlet cap **(34)** is securely fastened.

Caution: Only use for the purpose described in this manual. Keep the inflation hose away from water or small objects when the deflation function is activated to avoid damage to the blower motor.

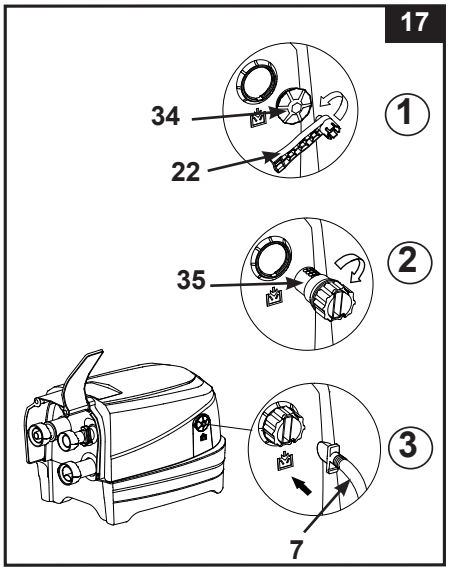

4. Make sure all the spa components and accessories are thoroughly clean and dry before storage. Air-dry the spa tub in the sun for an hour before folding.

5. Fold the spa tub loosely and avoid any sharp corners to prevent damage or leakage to the spa tub liner.

6. Prepare additional new cartridges for next time use.

7. Store the spa tub and accessories indoors, in a dry, temperature controlled, between 32º – 104ºF (0º – 40ºC), storage location.

8. The original packing can be used for storage.

TROUBLESHOOTING

PROBLEM	CAUSE	SOLUTION
NO DISPLAY/SPA CONTROL UNIT DOES NOT WORK	• Spa is unplugged or off. • Control panel cable plug loose. • Power failure. • GFCI/RCD tripped. • GFCI/RCD broken.	• Ensure the spa is plugged and switched on. • Ensure the control panel cable plug is firmly attached to the control base receptacle. • Check power source. • Reset the GFCI/RCD. • Contact Intex Service Center.
HOUSEHOLD CIRCUIT BREAKER TRIPPED	• Circuit breaker under rated. • Overloaded circuit breaker. • An electrical fault in the line.	• Ensure correct circuit breaker rating. • Provide a dedicated circuit breaker feeding the spa electrical outlet only. • Contact a qualify electrician to correct the electrical fault.
NOT HEATING PROPERLY	• Temperature set too low. • Dirty filter cartridge. • Water temperature decreasing during heater STANDBY mode. • Heating element failed.	• Increase the temperature and attach the spa cover. • Clean or replace the filter cartridge in time. • If heater is in STANDBY mode, press the flame button twice to heat up the water to the set temperature. • Contact Intex Service Center.
JET FUNCTION DOES NOT WORK	• Jet pump is too hot.	• Turn off and unplug the spa. Let it cool down and restart all over again. • If problem persists, contact Intex Service Center.
JETS OUTPUT ARE WEAK	• Low water level. • Obstruction in the suction inlet inside the tub. • Jet nozzles clogged or dirty. • Jet nozzles plumbing pipes damaged.	• Add water between MIN and MAX level. • Ensure suction inlet is not covered or blocked. • Clean any dirt inside the jet nozzles. • Contact Intex Service Center.
JET AIR CONTROL KNOB NOT WORKING	• Jet nozzles clogged or dirty. • Jet airflow plumbing inside the spa tub damaged.	• Clean any dirt inside the jet nozzles. • Contact Intex Service Center.
FILTRATION PUMP NOT WORKING	• Dirty filter cartridge. • Filtration inlet and/or outlet clogged. • Filter pump motor failed.	• Clean or replace the filter cartridge in time. • Check and clean filtration inlet and outlet regularly. • Contact Intex Service Center.
WATER NOT CLEAN	• Cartridge assembly not properly attached. • Insufficient filtering time. • Dirty filter cartridge. • Improper water maintenance. • Filtration inlet and outlet clogged.	• Ensure the cartridge assembly is properly attached. • Increase filtration time. • Clean or replace the filter cartridge in time. • Keep the spa water properly sanitized. Refer to the chemical manufacturer's instructions. • Check and clean filtration inlet and outlet regularly.
PUMP CONNECTORS ARE NOT LEVEL WITH THE SPA CONNECTORS	• One characteristic of PVC is that it changes shape, which is normal.	• Elevate the pump with wood or another type of insulated material to bring the pump's connectors level with the spa's connectors.
TUB HAS A STRANGE SHAPE	• Expanded internal air pressure by strong sunshine.	• Do not expose the spa to direct sunlight for extended period of time. • Check the air pressure and release air if necessary. During very hot weather, you must check to see whether it is necessary to release some air. This is to avoid any possible damage to the tub.

TROUBLESHOOTING (continued)

PROBLEM	CAUSE	SOLUTION
TUB LOSES AIR PRESSURE	• Air valve cap loose. • Air valve base loose. • Hole, cut or split on spa tub.	• Ensure air valve cap is securely closed. • Fill up the spa tub with air then make sure the air valve base is tighten, see "Spa Tub Air Valve Fastening" section. • Put liquid soap and water in a squirt bottle and spray on seams. If there is a leak it will bubble. After you find the leak, clean and dry the leaking area, then apply the repair patch that comes with your spa.
LEAKING BETWEEN SPA TUB CONNECTORS AND CONTROL UNIT CONNECTORS	• Spa control base inlet/outlet connections not securely tight. • Spa control base inlet/outlet o-ring missing/dirty.	• Tighten inlet and outlet connections. • Coat the o-ring with petroleum jelly for water proof. • Remove grid from inside spa with a screwdriver, ensure inlet/outlet O-ring is in place, clean and not damaged.
SPA IS TOO NOISY IN FILTRATION MODE ONLY	• Control base components not securely attached. • Control base ground not level and firm. • Spa filter motor failed.	• Ensure control panel, back cover and all inlet/outlet are securely connected. • Ensure ground is level, firm and smooth. • Replace the failed filter motor with a new one.
INSUFFICIENT CHLORINE	• Insufficient operating time of the sanitation system and/or heater is running at the same time. • Chlorine loss due to intense sunlight exposure. • The bather load has increased. • Clogged or dirty electrolytic cell.	• Increase the sanitation system operating time and ensure the heater is off during the sanitation process. See "Sanitation System Operating Instructions". • Use a SPA cover when the SPA is not in use and/or when the sanitation system is operating. • Increase the sanitation system operating time and test the water using the test strips. See "Sanitation System Operating Instructions". • Check and clean the cell if necessary. See "Maintenance".
BUBBLE AIR BLOWER DOES NOT WORK	• Air blower pump is too hot.	• Turn off and unplug the spa. Let it cool down and restart all over again. • If problem persists, contact Intex Service Center.
AIR PRESSURE IS WEAK DURING INFLATION	• Hose adaptor o-ring missing. • Inflation hose adaptor not securely tighten. • Connection between the hose adaptor and blower inflation outlet, and between the inflation hose and inflation valve are loose. • Air blower failure.	• Ensure the o-ring is in place. • Tighten/reinstall hose adaptor. • Finger tighten during inflation. • If problem persists, contact Intex Service Center.
AIR BUBBLES ARE NOT AS STRONG AS BEFORE	• O-ring missing between the control base air outlet and spa tub air inlet connections. • Air connection nut is not securely tight. • Air bubble channel passage inside the tub broken or leaking. • Air blower failure.	• Ensure the o-ring is in place. • Finger tighten all nuts. • Use repair patch to repair any puncture. • If problem persists, contact Intex Service Center.

TROUBLESHOOTING (continued)

LED PANEL CODE	PROBLEM	SOLUTION
LED Panel Code Flash & Alarm On (**NOTE**: Always turn off the power before cleaning and servicing).		
E81	• Transmission signal failure.	• Reset the GFCI/RCD, restart all over again. • Place the control panel within 5 m (16 ft) of the control base unit. • Press and hold POWER button for 5 seconds to turn off and charge the panel again. • If problem persists, contact Intex Service Center.
E90	• No water flow.	• Turn off and unplug the control unit. • Ensure the outlet cover grid is clean and free from obstructions. • Clean or replace the cartridge, see Maintenance and Storage section. • Ensure the in/outlet connections on the spa tub and filter pump are not blocked. • Keep the spa water properly sanitized to ensure a clean and unclogged filter cartridge. • Turn off and unplug the control unit. Plug the GFCI/RCD and restart all over again. • If problem persists, contact Intex Service Center.
E91	• Dirt or scale on titanium plates. • Low salt level/No salt. • Electrolytic cell cord is loose. • Possible electrolytic cell failure.	• Remove the electrolytic cell for inspection. Clean it if necessary. See "Maintenance". • Add salt. See "Salt Level Information". • Ensure that the cell cord is plugged firmly into the cell receptacle. • Contact Intex Service Center. Replace the cell if needed.
E92	• High salt level.	• Partially drain the pool and refill it with fresh water. See "Salt Level Information". • If problem persists, contact Intex Service Center.
E94	• Water temperature too low.	• If the ambient temperature is below 32°F (0°C), we recommend not to use the spa. • Turn off and unplug the control unit. Plug the GFCI/RCD and restart all over again. • Turn off and unplug the control unit, add some warm water to raise the spa water temperature above 34°F (1°C), then press the button to heat up the water to the desired temperature. • If problem persists, contact Intex Service Center.
E95	• Water temperature too high.	• Turn off and unplug the control unit. When the water has cooled down, plug the GFCI/RCD and restart all over again. • Turn the heater off, then press the filter and jet buttons to lower the water temperature. • If problem persists, contact Intex Service Center.
E96	• System Error.	• Turn off and unplug the control unit. Plug the GFCI/RCD and restart all over again. • If problem persists, contact Intex Service Center.
E97	• Dry-fire Protection.	• Contact Intex Service Center.
E99	• Water temperature sensor broken.	• Contact Intex Service Center.
END	• After 72 hours of continuous heating operation, the pump will hibernate automatically. The rapid heating and water filtration functions are disabled.	• Press the button to re-active the filter pump.
NO LED DISPLAY	• LED display is off • Charging Failed • Control Panel failure.	• Press any button to reactivate the control panel. • Reset the GFCI/RCD, restart all over again and charge the control panel again. • Make sure the surface between the back of the control panel and the control base charging dock is clean, dry and free of obstruction. • If problem persists, contact Intex Service Center.

WIFI APP TROUBLESHOOTING

PROBLEM	CAUSE	SOLUTION
WIFI PAIRING FAILURE DURING THE FIRST TIME SETUP	• Spa control base does not support WiFi App function, wrong model. • Spa wireless control panel does not support WiFi App function.	• Only compatible with the Intex Spa Models showing "..WF.." characters in the model number as printed on the spa control base electrical rating label. • Make sure the spa wireless control panel has the WiFi signal icon . • Make sure the spa control base and wireless control panel are both compatible and support WiFi App function. • Contact Intex Service Center.
	• Wrong version of mobile device.	• Ensure the right version of mobile devices: a. iOS - Apple iPhone 6, 6 Plus and greater. Tablet compatibility is not optimized. b. Android – All Android phones. Tablet compatibility is not optimized.
	• Incompatible mobile device operating system.	• Ensure the right version of operating system: a. Apple devices – iOS 11.0 and greater. b. Android devices – Android 6.0 and greater. For 6.0 and greater version, you must turn on the GPS signal on your mobile device for the first time pairing. Once you have successfully paired the spa and save it, you may turn off the GPS signal.
	• Wrong router network band.	• Make sure you are connecting to a 2.4GHz network and try to pair the mobile device with the spa control panel again.
	• Wrong network name.	• Make sure you are connecting to the right WiFi router signal and try to pair the mobile device with the spa control panel again. • Make sure your mobile device and spa control panel are connected to the same WiFi router signal.
	• Wrong WiFi password.	• Ensure correct WiFi router password. See WiFi pairing section.
	• The setup spa location is too far from your WiFi router signal coverage range.	• Ensure your mobile device is connected to your WiFi router and can access and browse the internet. • Remove the wireless control panel from the control base and bring it closer to your WiFi router while making sure it's within 5m (16ft) distance of the control base in order to prevent activating the error code E81 (transmission signal failure). Then try to pair the spa control panel with your mobile device. If it can be paired, your spa is too far away and you need to make sure the entire SPA is within your WiFi router signal coverage range. • If you cannot move your spa, then you need to move your WiFi router or add a repeater/signal booster so that you can receive signals from your WiFi router at your setup spa location. • Try to pair the mobile device with the spa control panel again.
	• The App does not load.	• Force-quit the App, re-launch the App and try to pair the spa control panel with your mobile device again. • Ensure the right version of mobile devices and operation system. • Uninstall the App and reinstall it again. See WiFi pairing section.
	• Bluetooth and WiFi not activated on your mobile device. • IntexLink App "Nearby Devices" not activated. • Your mobile device "Location access" is not activated.	• Turn on the Bluetooth and WiFi functions on your mobile device first. • Allow "Nearby Devices" permission (IntexLink App info → App permissions → Nearby devices → Allow). • Turn on "Location access" on your mobile device while using the App. • Power off the spa control base and the wireless control panel, restart the spa and try to pair the spa control panel again. See "WiFi Pairing" section. • If the problem persists, contact Intex Service Center.
	• Wrong WiFi pairing sequence.	• Refer to "WiFi pairing" section.

WIFI APP TROUBLESHOOTING (continued)

PROBLEM	CAUSE	SOLUTION
OFFLINE AFTER SUCCESSFUL INITIAL SETUP AND PAIRING	• LED display is off. • E81. • Control panel charging failed. • Control Panel failure.	• Press any button to reactivate the spa control panel. • Reset the GFCI/RCD, restart all over again and make sure the wireless control panel is fully charged. • Make sure the surface between the back of the wireless control panel and the control base charging dock is clean, dry and free of obstruction. • Try to pair the mobile device with the spa control panel again. • If problem persists, contact Intex Service Center.
	• WiFi signal failure. • WiFi LED indicator light is blank.	• Reboot the WiFi router by powering it off for one minute and then turning it back on. Refer to your WiFi router's troubleshooting guide for more assistance. • Make sure your mobile device and spa control panel are connected to the same WiFi router signal, and your mobile device can access and browse the internet from the location where the spa is setup. • If you cannot move your spa, then you need to move your WiFi router or add a repeater/signal booster so that you can receive signals from your WiFi router at your setup spa location. • Power off the spa control base and the wireless control panel, restart the spa and try to pair the spa control panel again. • Try connecting using your mobile data function (2G, 3G, 4G and LTE), if it works, there may be a firewall that is preventing communications between your mobile device and the spa. • If the problem persists, contact Intex Service Center.
	• The App does not load.	• Force-quit the App, re-launch the App and try to pair the spa control panel with your mobile device again. • Make sure your mobile device data function is activated and the device can access and browse the internet. • If the mobile data function (2G, 3G, 4G and LTE) works, try pairing the spa control panel to your Wi-Fi router network. See WiFi pairing section.
	• Other interferences.	• Make sure there are no big metallic walls, objects between the spa and your WiFi router signal. • Make sure the surface between the back of the wireless control panel and the control base charging dock is clean, dry and free of obstruction. • Always return the wireless control panel to the spa control base charging dock after using the spa or when the spa is not in use.

IMPORTANT

If you continue to experience difficulty, please contact our Consumer Service Department for assistance. See separate "Authorized Service Centers" sheet.

FILTER PUMP MOTOR DISASSEMBLY

If there is a need to replace the filter motor, follow below steps to disassemble it:

IMPORTANT: You must drain out any remaining water inside the piping system of the control base before replacing any parts.

Tools required: One adjustable wrench and one Philip screwdriver.

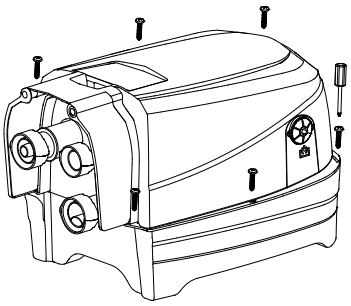

1

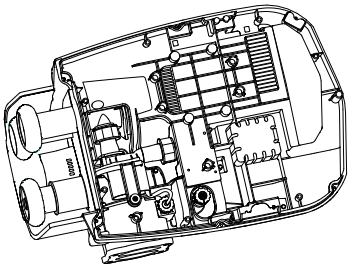

2

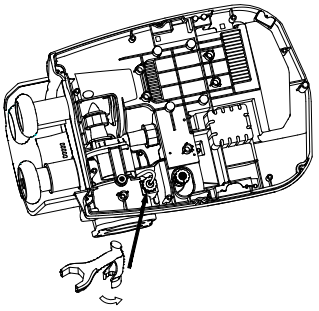

3

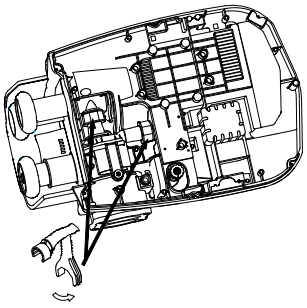

4

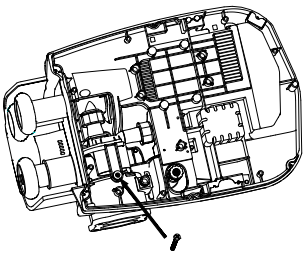

5

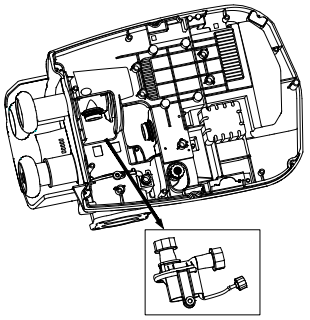

6

NOTE: The "special wrench tool" is included with the new filter pump motor replacement and not with the spa set.

WARRANTY

Your PureSpa has been manufactured using the highest quality materials and workmanship. All Intex products have been inspected and found free of defects prior to leaving the factory. This Limited Warranty applies only to the PureSpa listed below.

The provisions of this Limited Warranty apply only to the original purchaser and is not transferable. This Limited Warranty is valid for a period of 2-year from the latter of the date of the initial retail purchase or delivery. Keep your original sales receipt with this manual, as proof of purchase will be required and must accompany warranty claims or the Limited Warranty is invalid.

PureSpa Warranty – 2 Years

If a manufacturing defect is found within the periods noted above, please contact the

appropriate Intex Service Center listed in the separate "Authorized Service Centers" sheet. The Service Center will determine the validity of the claim. If the Service Center directs you to return the product, please carefully package the product and send with shipping and insurance prepaid to the Service Center. Upon receipt of the returned product, the Intex Service Center will inspect the item and determine the validity of the claim. If the provisions of this warranty cover the item, the item will be repaired or replaced at no charge.

Any and all disputes regarding the provisions of this Limited Warranty shall be brought before an informal dispute settlement board and unless and until the provisions of these paragraphs are carried forth, no civil action may be instituted. The methods and procedures of this settlement board shall be subject to the rules and regulations set forth by the Federal Trade Commission (F.T.C.). IMPLIED WARRANTIES ARE LIMITED TO THE TERMS OF THIS WARRANTY AND IN NO EVENT SHALL INTEX, THEIR AUTHORIZED AGENTS OR EMPLOYEES BE LIABLE TO THE BUYER OR ANY OTHER PARTY FOR DIRECT OR CONSEQUENTIAL DAMAGES OR LIABILITIES. Some states, or jurisdictions do not allow the exclusion or limitation of incidental or consequential damages, so the above limitation or exclusion may not apply to you.

This Limited Warranty does not apply if the products are subject to negligence, abnormal use or operation, accident, improper operation, improper voltage or current contrary to operating instructions, or to damage by circumstances beyond Intex's control, including but not limited to, ordinary wear and tear and damage caused by exposure to fire, flood, freezing, rain, or other external environmental forces. This warranty will become null and void if the PureSpa is used for any commercial purposes. This Limited Warranty applies only to those parts and components sold by Intex. The Limited Warranty does not cover unauthorized alterations, repairs or disassembly by anyone other than Intex Service Center personnel.

DO NOT GO BACK TO THE PLACE OF PURCHASE FOR RETURN OR REPLACEMENT. IF YOU ARE MISSING PARTS OR NEED ASSISTANCE, PLEASE CALL US (FOR U.S. AND CANADIAN RESIDENTS): 1-310-549-8235 OR VISIT OUR WEBSITE: WWW.INTEXCORP.COM.

Proof of Purchase must accompany all returns or the warranty claim will be invalid.