ATH519

TELEHANDLER

COMPACT TELEHANDLER REACH AND CAPACITY FOR MATERIAL HANDLING ON TIGHT JOBSITES.

3-YEAR / 3,000-HOUR LIMITED WARRANTY



Compact telehandler performance with 5,512 lb capacity, 19.69 ft lift height and four-wheel maneuverability.

74 HP	5,512 LB	12,787 LB	19.69 FT
RATED POWER	MAX CAPACITY	OPERATING WEIGHT	MAX LIFT HEIGHT

PRODUCT HIGHLIGHTS

1. **KOHLER EPA 4 ENGINE**
   Four-cylinder KDI 2504TCR/23 diesel rated at 74 hp.
2. **4-SPEED TRANSMISSION**
   Torque-converter drive with four forward and four reverse gears.
3. **FAST HYDRAULIC CYCLES**
   17 sec lift, 11 sec lower/extend and 6.5 sec retract cycles.



Specifications are subject to change without notice. Images may show optional configurations.

TECHNICAL SPECIFICATIONS

5,512 LB	19.7 FT	7.09 FT
MAX CAPACITY	MAX LIFT	MAX OUTREACH

ENGINE

Engine Model		KDI 2504TCR/23
Number of Cylinders		4
Power	HP	74
Displacement	cu in	151.5
Max. Torque	lb-ft @rpm	222 @ 1,500

POWERTRAIN & TIRES

Transmission		Torque converter
Gears - Forward / Reverse		4 / 4
Maximum Travel Speed	mph	21
Parking / Service Brake		Disc / Disc
Tire Type / Size		Pneumatic / 12-16.5
Steering / Drive Wheels	F/R	2/2 · 2/2

OPERATING SPECIFICATIONS

Maximum Capacity	lb	5,512
Maximum Lift Height	ft	19.69
Maximum Outreach	ft	7.09
External Turning Radius	ft	14.8

SERVICE REFILL CAPACITIES

Engine Oil	gal	1.5
Hydraulic Oil	gal	187.6
Fuel Tank	gal	21.1

HYDRAULIC SYSTEM

Pump Type		Piston)
Hydraulic Flow	gal/min	22.5

OPERATING WEIGHT

Operating Weight	lb	12,787

DIMENSIONS

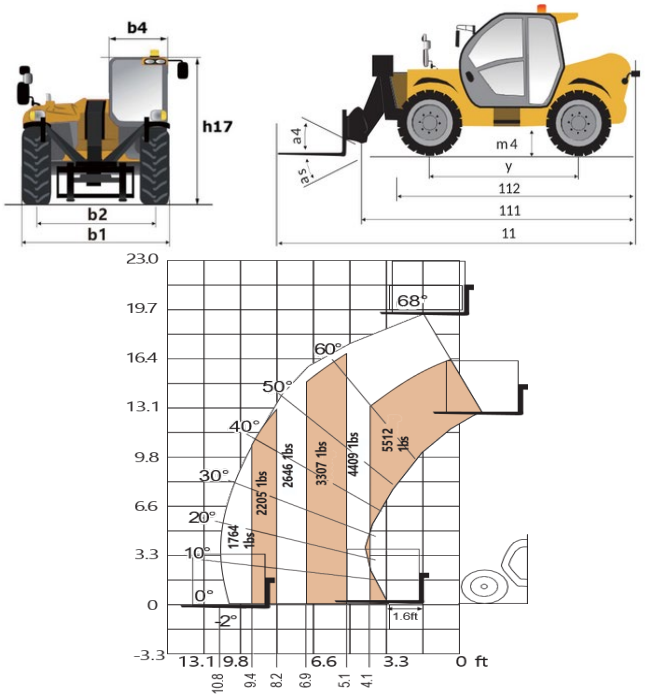

DIMENSION REFERENCE - PRIMARY

Overall Length to Carriage	ft	13.1
Length to Face of Forks	ft	17.1
Minimum Transport Size	ft	12.7
Overall Width	ft	6.6
Track Width	ft	5.6
Overall Height	ft	6.8
Wheelbase	ft	9.2
Ground Clearance	ft	0.8

DIMENSION REFERENCE - ADDITIONAL

Overall Cab Width	ft	2.7
Tilt-Up Angle	°	10
Tilt-Down Angle	°	100
External Turning Radius	ft	14.8
Fork L × W × Section	ft	4.0 × 0.4 / 0.2

Specifications are subject to change without notice. Images may show optional configurations.