LC10
LEVEL CONTROLLER

Beaumont Manufacturing and Distribution Company

The LC10 is a rugged, displacer operated level controller that is ideal for use on scrubbers, separators, heater treaters or anywhere level control is needed. Its industry-proven force balance design allows for control of gas/liquid as well as liquid/liquid interfaces.

The LC10 can be mounted on the left or right hand side or from the back and can be set up for direct or reverse acting. Both the mounting and action are field reversible. It is available with an easily replaceable snap or throttling pilot for pneumatic control. The snap pilot is available with a soft seat option. SPDT and DPDT switches are available for electric control.

A wide variety of sizes and end connections are available, as well as many different displacer arm lengths to fit any vessel configuration. A NACE option is available for sour service. A sealed case version is also available.

SPECIFICATIONS

Sizes:
- Threaded: 1 1/2" and 2"
- Flanged: 2" to 8"
- Union: 4", 5", 6" and 8"

Pressure Rating:
- Threaded: 6000 psi
- Flanged: Up to ANSI 2500 Class
- Union: 1500 psi

Temperature Range:
- -50° F to 400° F (Varies by Material Selections)

Pilot Connections:
- 1/4" NPT

Pilot Max Pressure:
- Limited by Gauges

Electric Switch Ratings:
- SPDT: 15 A @ 125, 250, 480 VAC
- DPDT: 10 A @ 125 VAC

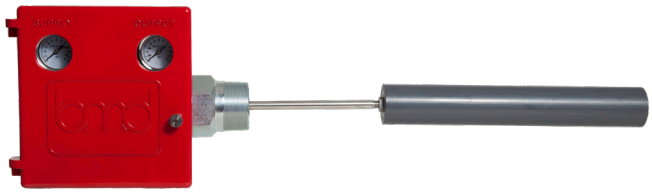

MATERIALS

Body:
- A105
- LF2 (Low Temp Option)
- SST

Body Trim:
- 303 Stainless
- 316 Stainless (Optional)

Pilot Body:
- Aluminum

Pilot Trim:
- 303 Stainless

Case:
- Aluminum

Torque Bar:
- 303 Stainless

Displacer:
- PVC (Standard)
- Acrylic
- Stainless

INSTALLATION

LEFT HAND MOUNT

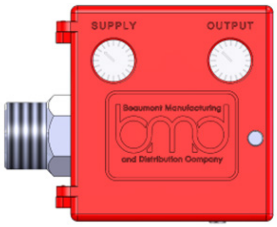

RIGHT HAND MOUNT

DIMENSIONS *Dimensions for Standard Sizes

LEFT/RIGHT HAND MOUNTED

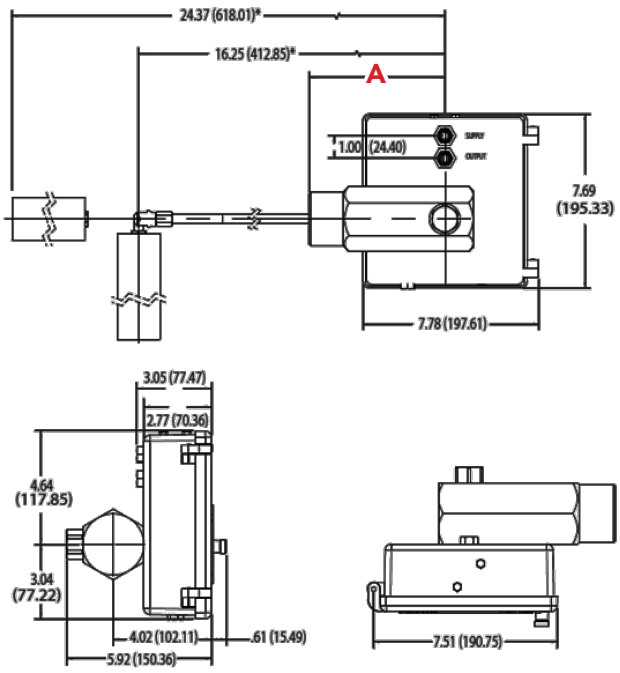

BACK MOUNTED

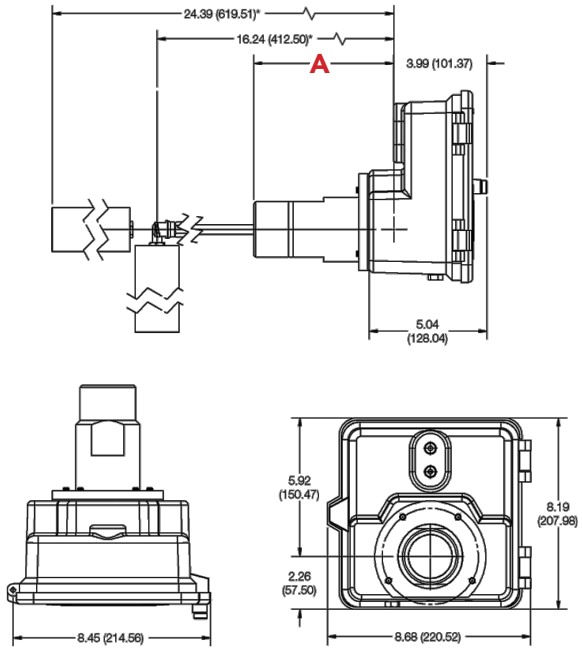

SEALED CASE

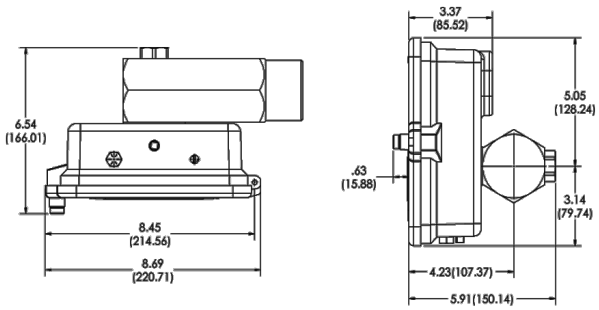

CONNECTION	DIMENSION A							
	1.5" / 2"		3"		4"		6"	
	inches	mm	inches	mm	inches	mm	inches	mm
NPT	6.00	152.4	--	--	--	--	--	--
Butt Weld	6.00	152.4	--	--	--	--	--	--
150# RFF	6.50	165.1	6.56	166.62	6.56	166.62	6.50	165.1
300# RFF	6.81	173.0	6.75	171.45	6.88	174.75	6.94	176.3
600# RFF	7.19	182.6	7.12	180.85	7.50	190.50	11.00	279.4
600# RTJ	7.25	184.2	7.31	185.67	7.56	192.02	11.00	279.4
900# RFF	8.00	203.2	9.63	244.60	10.13	257.30	CONSULT FACTORY	
900# RTJ	8.06	204.7	9.69	246.13	10.19	258.83		
1500# RFF	8.00	203.2	10.25	260.35	10.63	270.00		
1500# RTJ	8.06	204.7	10.31	261.87	10.69	271.53		
2500# RFF	8.50	215.9	11.06	280.92	11.75	298.45		
2500# RTJ	8.56	217.4	11.13	282.70	11.81	299.97		

For 8" dimensions, consult factory

SPECIFICATIONS

TEMPERATURE LIMITS FOR DISPLACERS AND SEALS COMBINATIONS						
	DISPLACERS					
	PVC		Acrylic		Stainless Steel	
SEALS	°F	°C	°F	°C	°F	°C
Buna	-20 to 140	-29 to 60	-20 to 180	-29 to 82	-20 to 225	-29 to 107
Low Temp Buna	-50 to 140	-46 to 60	-50 to 180	-46 to 82	-50 to 225	-46 to 107
Viton™	-20 to 140	-29 to 60	-20 to 200	-29 to 93	-20 to 400	-29 to 204

DISPLACER ORIENTATION	MINIMUM FLUID SPECIFIC GRAVITIES*	
	SNAP PILOT	THROTTLE PILOT
Vertical	0.21	0.42
Horizontal	0.28	0.56

*LH & RH Mount Only

HOW TO ORDER

EXAMPLE MODEL NO. ***LC10-2N50R-1B-01PV15-P1***

LC10 Series Level Controller, 2" NPT Connection, Right-Hand Direct, Carbon Steel Body, 303 Trim, Buna Seals, 1.88 x 12" PVC Displacer, Vertical, 15" Arm, Snap Pilot, 0-30 Brass Gauges

LC10-2 N 50 R-1 B-01 P V 15- P 1

SERIES

CONTROLLER CASE

LC10 - Standard Case | **LC10B** - Back Mount Case | **LC10S** - Sealed Case

CONNECTION SIZE

1 - 1.5" * | **2** - 2" | **3** - 3" | **4** - 4" | **5** - 5" (Union Only) | **6** - 6" | **8** - 8"

CONNECTION

N - NPT (male) | **J** - RTJ | **H** - Hammer Union Acme | **W** - Socket Weld
F - RFF | **B** - Butt Weld | **V** - Hammer Union V-Thread

CLASS

50 - NPT or Union | **60** - 600 | **25** - 2500 | **16** - Shd 160 (butt weld)
10 - 150 | **90** - 900 | **40** - Shd 40 (butt weld)
30 - 300 | **15** - 1500 | **80** - Shd 80 (butt weld)

MOUNTING/ACTION

L - Left Hand Direct | **M** - Left Hand Reverse | **B** - Back Mount Direct | **T** - Left Hand Ported
R - Right Hand Direct | **N** - Right Hand Reverse | **P** - Back Mount Reverse | **U** - Right Hand Ported

MATERIALS (BODY/TRIM)

1 - CS/303SS | **2** - CS/316 NACE | **3** - Low Temp CS/316SS | **4** - All 316 Stainless

SEALS

B - Buna | **V** - Viton™ | **A** - Aflas® | **L** - Low Temp Buna

DISPLACER CODE**

01 - 1.88x12 (PVC/Acrylic) | **02** - 1.66x12 (SST 304) | **03** - 1.90x12 (SST 304)

DISPLACER MATERIAL

P - PVC | **A** - Acrylic | **T** - SST

DISPLACER ORIENTATION

V - Vertical | **H** - Horizontal

ARM CODE**

08 - 8" | **12** - 12" (Standard Horz.) | **15** - 15" (Standard Vert.) | **16.44** - 16.44" (CH30) | **24** - 24" (Union)

PILOT

P - Snap | **E** - SPDT Electric Switch*** | **W** - Anti-Vibe Throttle (Liq Filled Gauges) | **N** - Zero Bleed Snap
T - Throttle | **D** - DPDT Electric Switch*** | **V** - Anti-Vibe Snap (Liq Filled Gauges) | **H** - Vent Port Snap

GAUGES

1 - 0-30 Brass | **2** - 0-60 Brass | **3** - 0-30 SST | **4** - 0-60 SST | **5** - 0-30 Brass, Liq Filled | **6** - 0-60 Brass, Liq Filled | **7** - 0-30 SST, Liq Filled | **8** - 0-60 SST, Liq Filled | **0** - Electric (No Gauges)

*Requires 1.66 diameter displacer **Consult Factory for additional arm lengths & displacer options.
***Require the use of sealed case, LC10S or LC10B *Repair kit available; Custom displacers and arms available*

BEAUMONTMANUFACTURING.COM

PHONE: 409.225.5863
850 FANNIN STREET, BEAUMONT, TEXAS 77701

10/2026

Beaumont Manufacturing and Distribution Company