MITSUBISHI ELECTRIC
HYDRONICS & IT COOLING SYSTEMS S.p.A.

Data Book

COOLING

FX2-G01 0322 - 1883_202008_EN R134a
ELCA_Engine ver.4.4.4.0

FX2-G01 0322 - 1883

310-1839 kW

Chiller, air source for outdoor installation

(The photo of the unit is indicative and may vary depending on the model)

R HFC R-134a

SCREW

T SHELL & TUBES

EUROVENT CERTIFIED PERFORMANCE
www.eurovent-certification.com

VPF VARIABLE PRIMARY FLOW

- ✔ ErP COMPLIANT 2021
- ✔ ALUMINIUM MICRO-CHANNEL HEAT EXCHANGERS
- ✔ EXTREMELY SILENT OPERATION
- ✔ HIGH EFFICIENCY
- ✔ WIDE OPERATING RANGE
- ✔ GROUP CONTROLS WITH DYNAMIC MASTER
- ✔ VARIABLE PRIMARY FLOW

CLIMAVENETA®

CERTIFICATIONS

Product certifications

Voluntary product certifications

Check ongoing validity of certificate:
www.eurovent-certification.com
or
www.certiflash.com

System certifications

MITSUBISHI ELECTRIC HYDRONICS & IT COOLING SYSTEMS S.p.A.

Quality System complying with the requirements of UNI EN ISO 9001:2008 regulation
Environmental Management System complying with the requirements of UNI EN ISO 14001:2004 regulation
Occupational Health and Safety Management System complying with the requirements of BS OHSAS 18001:2007

1.1	PRODUCT PRESENTATION	pg.1.1.1 / 1.1.3
2.1	INCIPIT	pg.2.1.1 / 2.1.1
3.1	UNIT STANDARD COMPOSITION	pg.3.1.1 / 3.1.4
4.1	OPTIONS	pg.4.1.1 / 4.1.14
5.1	GENERAL TECHNICAL DATA	pg.5.1.1 / 5.1.10
6.1	TECHNICAL DATA SEASONAL EFFICIENCY IN COOLING (EN14825 VALUE)	pg.6.1.1 / 6.1.0
7.1	OPERATING LIMITS	pg.7.1.1 / 7.1.5
8.1	HYDRAULIC DATA	pg.8.1.1 / 8.1.4
9.1	ELECTRICAL DATA	pg.9.1.1 / 9.1.6
10.1	FULL LOAD SOUND LEVEL	pg.10.1.1 / 10.1.6
11.1	DIMENSIONAL DRAWINGS	pg.11.1.1 / 11.1.6
12.1	HYDRONIC GROUP	pg.12.1.1 / 12.1.25

Liability disclaimer
The present publication is drawn up by of information only and does not constitute an offer binding upon Mitsubishi Electric Hydronics & IT Cooling Systems S.p.A.
Mitsubishi Electric Hydronics & IT Cooling Systems S.p.A. has compiled the content of this publication to the best of its knowledge. The data contained herein are subject to change without notice. Mitsubishi Electric Hydronics & IT Cooling Systems S.p.A. explicitly rejects any liability for any direct or indirect damage, in the broadest sense, arising from or related to the use and/or interpretation of this publication. All content is copyrighted by Mitsubishi Electric Hydronics & IT Cooling Systems S.p.A.

The units highlighted in this publication contain R134a [GWP_{100} 1430] fluorinated greenhouse gases.

Functions

COOLING — Cooling

Refrigerant

R HFC R-134a — R-134a

Compressors

SCREW — Screw compressor

Fan

AXIAL — Axial fan

Exchangers

T SHELL & TUBES — Shell & Tubes

Other features

EUROVENT CERTIFIED PERFORMANCE www.eurovent-certification.com — Eurovent

VPF VARIABLE PRIMARY FLOW — VPF

GREEN CERTIFICATION RELEVANT

Mitsubishi Electric Hydronics & IT Cooling Systems S.p.A., as a major player in the world HVAC market and a leading manufacturer of energy efficient, sustainable HVAC solutions, recognizes and supports the diffusion of green certification systems, as an effective way to deliver high performance buildings and improve the quality and the sustainability of the built environment.

Since the first certification system was introduced at the beginning of the 1990s, the demand for certified buildings has grown considerably, as well as the number of standards, rating and certification programs. Operating worldwide Mitsubishi Electric Hydronics & IT Cooling Systems S.p.A., has extensive experience with many of them and is active member of Green Building Council Italy.

Mitsubishi Electric Hydronics & IT Cooling Systems S.p.A., commitment to develop responsible and sustainable HVAC solutions, is reflected by a full range of premium efficiency products and systems, designed with special care to improve building energy performance ratings, according to major certification protocols, including LEED, BREAM, GREENSTAR, BCA, NABERS, DNGB, HQE and BEAM.

To find out more about how our products contribute to enhanced green certification rating and energy performance of a building, please refer to:
https://www.melcohit.com/EN/Environment/green_certifications/

Outdoor unit for the production of chilled water with semi-hermetic screw compressors optimized for R134a, axial-flow fans, micro-channel full-aluminum condensing coils, single-pass shell and tubes evaporator designed by Mitsubishi Electric Hydronics & IT Cooling Systems S.p.A. and electronic expansion valve.
Base and supporting structure and panels are made of galvanized epoxy powder coated steel with increased thickness. Eurovent certification.
Flexible and reliable unit; it easily adapts itself to different thermal load conditions thanks to the precise thermoregulation and the accurate sizing of all internal components. The compressors feature an enhanced lubrication system, an innovative internal geometry, and a different control of capacity steps. Innovations that grant a remarkable performance improvement especially at partial loads.

1.3 ErP COMPLIANT 2021
The units comply and exceed the minimum seasonal energy efficiency requirements that will start from 2021, imposed by the eco-sustainable design Directive 2009/125/EC. The seasonal efficiency can be further raised thanks to the optional EC fans.

1.4 ALUMINIUM MICRO-CHANNEL HEAT EXCHANGERS
The full aluminium micro-channel condenser coils deliver high efficiency while ensuring a reduced refrigerant volume and a lower unit weight. The e-coating protection (optional) grants the highest level of corrosion resistance in any condition, even in the most aggressive environments.

1.5 EXTREMELY SILENT OPERATION
The silenced version provides the best combination of quietness and efficiency on the market thanks to the emphasis on minimizing noise levels during the design phase.

1.6 HIGH EFFICIENCY
Very high efficiency at full and partial loads, at the highest market levels, thanks to the adopted technological solutions. These units ensure low operating costs and therefore a quick payback time.

1.7 WIDE OPERATING RANGE
The accurate condensation control (variable fan speed regulation as standard on every model) and devoted kits allow the unit to operate from -10°C (-20°C with accessories) to 50°C (54°C with accessories) of outdoor air temperature and from -8°C to 18°C (20°C with accessories) of evaporator leaving water temperature.

1.8 GROUP CONTROLS WITH DYNAMIC MASTER
Load sharing, sequencing, active redundancy, priority of resource activation, alarm management, theese are only some of the LAN functions that the unit is able to manage when connected to a group of chillers. Besides, the system's stability is ensured even in case of alarm or malfunctioning thanks to the Dynamic Master logic.

1.9 VARIABLE PRIMARY FLOW
Energy savings due to variable pump speed management based on load demand and the variable flow ensures the units also function in critical working conditions.

1.10 INTEGRATED HYDRONIC MODULE
The built-in hydronic module already contains the main water circuit components; it is available as option with twin in-line pump, for achieving low or high head, fixed or variable speed.

FX2-G01 / D / SL-E / 1402

Size

First 3 digits
Cooling capacity *0,1

Last digit
Number of compressors

Versions

K
Standard efficiency

SL-K
Super low noise, standard efficiency

E
Very high efficiency

SL-E
Super low noise, very high efficiency

Configurations

-
Basic function

D
Partial condensing heat recovery function

Product

FX2-G01

Chiller, air source for outdoor installation

Refrigerant gas R134a

3.1 UNIT STANDARD COMPOSITION

CONFIGURATIONS

- , standard unit

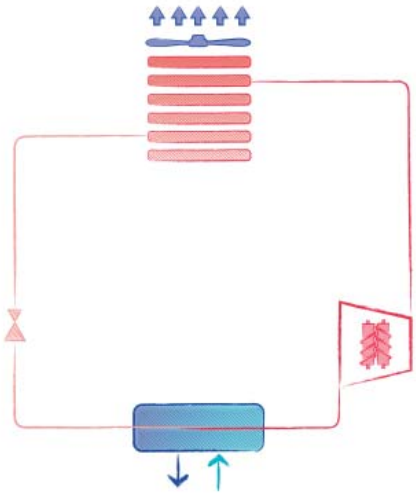

No heat recovery is possible.

/D, unit with partial heat recovery

Heat recovery: ON

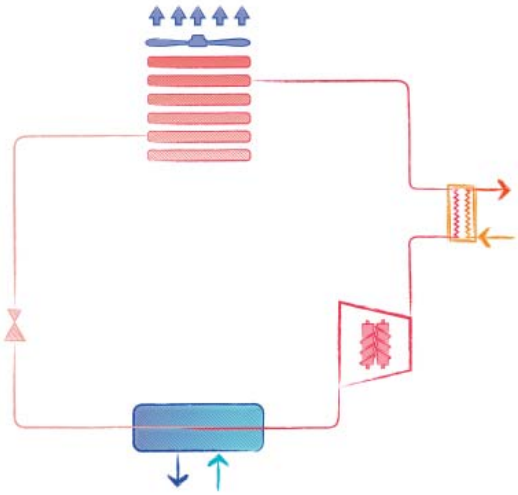

Heat recovery: OFF (water flow stopped)

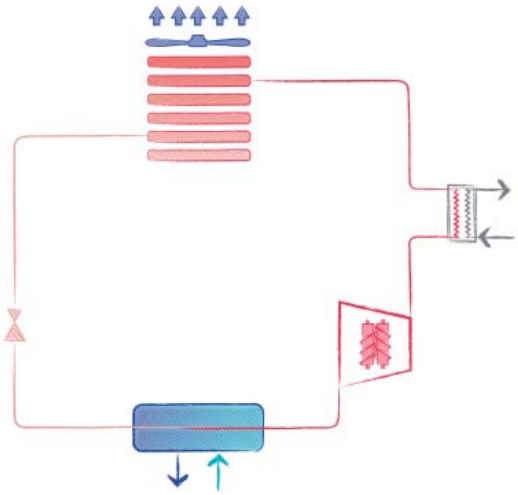

Each refrigerant circuit is fitted with a desupeheater.
The superheating heat recovery is only possible when the temperature of the hot water circuit is lower than the compressor discharge temperature.
The heat recovery and its amount dipends on the unit's operating conditions, in particular the outdoor air temperature and the load percentage.
It is advised to interrupt the water flow to the desuperheater when the conditions for an actual heat recovery are not met.

The smart management of the desuperheater pump(s) is possible with the option 3371 D - RELAY 1 PUMP (ON/OFF), further information is available in the bulletin section dedicated to accessories.

Partial heat recovery operating limits:

	MIN temperature	MAX temperature
Inlet water	25°C (77°F)	56°C (132,8°F)
Outlet water	30°C (86°F)	60°C (140°F)

3.2 Chiller, air source for outdoor installation
Outdoor unit for the production of chilled water with semi-hermetic screw compressors optimized for R134a, axial-flow fans, micro-channel full-aluminum condensing coils, single-pass shell and tubes evaporator designed by Mitsubishi Electric Hydronics & IT Cooling Systems S.p.A. and electronic expansion valve.
Base and supporting structure and panels are made of galvanized epoxy powder coated steel with increased thickness. Eurovent certification.
Flexible and reliable unit; it easily adapts itself to different thermal load conditions thanks to the precise thermoregulation and the accurate sizing of all internal components. The compressors feature an enhanced lubrication system, an innovative internal geometry, and a different control of capacity steps. Innovations that grant a remarkable performance improvement especially at partial loads.

3.3 Installation note
The unit is supplied fully refrigerant charged and factory tested. On site installation only requires power and hydraulic connection.

3.4 Structure
Structure specifically designed for outdoor installation. Base and frame in hot-galvanised steel sheet of suitable thickness. All parts polyester-powder painted to assure total weather resistance. Painting: RAL 7035 textured finish.

3.5 Refrigerant circuit
Unit designed with separate and independent refrigerant circuits in order to ensure continuous operation and easy maintenance. In addition to the main components described in the following sections, each refrigerant circuit is fitted as standard with:
- electronic expansion valve
- high and low pressure transducers
- visualization of the pressure´s level directly from the controller´s interface
- safety switching device for limiting the pressure
- high and low pressure safety valve
- liquid line shut-off device (function performed by electronic expansion valve with ultracap)
- non -return valve in compressor´s discharge line integrated in the compressor
- compressor's discharge valve
- liquid line shut-off valve
- refrigerant line sight glass with humidity indicator
- drier filter with replaceable cartridge
- economizers on the following models:
  0402 (K); 0472 (all versions); 0512 (SL-K); 0702 (K, SL-K); 0772 (SL-K, E, SL-E); 0852 (SL-E); 1222 (K, SL-K); 1262 (SL-K); 1322 (E, SL-E); 1402 (K, SL-K, SL-E); 1773 (K); 1883 (K, SL-K)

3.6 Compressor
CSC screw-compressors designed according to Mitsubishi Electric Hydronics & IT Cooling Systems S.p.A. specifications and for its exclusive use.
Semi-hermetic screw compressors with 2 five- and six-lobe rotors: the five-lobe rotor is splined directly onto the motor (nominal speed 2950 rpm) without the use of interposed gears.
The bearings provided along the rotor axis are housed in a separate chamber, isolated from the compression chamber. Made of carbon steel, the bearings are granted for a lifetime of 150.000 hours.
Each compressor is provided with an inlet for refrigerant injection (for the extension of operating limits) and the use of the economizer (for the output capacity and efficiency's increase).
Optimized lubrication guarantees oil´s distribution between mechanical parts, without using an oil pump. The innovative oil management valve greatly enhances the lubrication system by reducing the oil quantity and allowing a remarkable increase of the compressor efficiency at partial load. The built-in oil separator has 3 stages of separation, and a 10 mm stainless steel mesh filter ensures the constant presence of oil inside.
Innovative mechanic design with inner slider, managed according to specific proprietary parameters, for the variation of Vi depending on the different operating conditions. This allows to adjust the cooling capacity of the compressor from 100% to 40% (data referred to the operating conditions: 7°C of leaving water temperature, 35°C of outdoor air temperature) always achieving maximum efficiency, even in case of considerable load partialization.
The two pole motors are fitted as standard with electric devices to limit the absorbed current during compressor start-up, and with empty start-up. Each compressor is fitted with manual-reset motor thermal protection, delivery gas temperature and oil level controls and an electric resistance for the carter´s heating while the compressor is stopped. A check valve fitted on the refrigerant delivery line prevents the rotors from reversing after stopping. On-off cocks on the delivery line of each compressor to isolate the refrigerant charge in the heat exchanger when required.

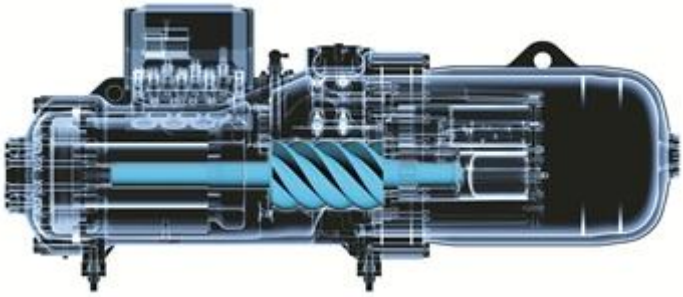

3.7 Plant side heat exchanger
Dry expansion type shell and tube heat exchanger; it acts as an evaporator with refrigerant flow inside the pipes and water flow on the shell side. Fully developed and manufactured by Mitsubishi Electric Hydronics & IT Cooling Systems S.p.A., the heat exchanger is a single pass type to provide almost perfect countercurrent heat exchange. The water flow on the shell side is fitted with baffles to increase turbulence and therefore the efficiency of exchange. The steel shell has insulation lining made of flexible closed cells elastomeric foam (thermal conductivity 0.033W/mK at 0°C) coupled with 3 mm layer of crosslinked PE foam with a surface film of embossed PE for a total thickness of 9 mm. The tube nest is manufactured using copper tubes with internal grooves to improve heat exchange and each pipe is mechanically expanded onto the tube plates. The heat exchanger is fitted with a differential pressure switch which controls the flow of water when the unit is working, in this way preventing the formation of ice inside; when pumps stop, the antifreeze control is up to an electrical resistance. The heat exchanger is made in compliance with PED standard work pressure requisites. Upon request, the heat exchanger can be supplied AS1210 compliant or with the SafeWork NSW certificate, depending on the size. For some sizes (versions K, SL-K: 1262, 1322, 1402) the AS1210 heat exchanger has another trademark.

3.8 Source side heat exchanger
Microchannel coils ideally positioned on a "V" block structure to optimize airflow and heat transfer. Made entirely in aluminum, the coils are not subjected to galvanic corrosion.
Fins and manifolds are made of aluminum AA3003 while the channels are made of a new aluminum alloy so defined Long Life Alloy (LLA). LLA alloy has a very fine grain microstructure that guarantees higher mechanical properties and a higher resistance to the inter-granular corrosion.
Channel small section favor refrigerant fluid turbulence, which enhances the heat exchange. Tube geometry maximize the surface touched by the air, thus allowing compact dimension and refrigerant charge reduction.

3.9 Fan section source side
Axial electric fans, protected to IP 54 and with insulation class ´F´, featuring an external rotor and profiled blades. Housed in an aerodynamic hood complete with safety guard. The fan + outlet set satisfies the efficiency requirements provided for by EcoDesign directive 327/11.
6-pole electric motor with built-in thermal protection. Variable Speed Device (DVVF) for controlling condensation by adjusting the speed of rotation with voltage steps (auto-transformer), fitted with a ventilation distribution system in case of external air low temperature. In conformity with the adjustment logic, each condenser circuit has a totally independent ventilation system.

3.10 Super Low noise version features
The Super Low noise units (version SL) feature:
- Condensing section larger than the corresponding standard version's one (version SL-E excluded)
- Reduced fan speed (the speed is automatically increased in case of particularly tough environmental conditions).
- Compressor enclosure with a special soundproofing insulation (multilayer lining of polyurethane foam and sound-insulating gaiter, total thickness 30 mm)
- Covering of the exposed pipes between the V-blocks with painted metal sheets with a special soundproofing insulation (multilayer lining of polyurethane foam and sound-insulating gaiter, total thickness 30 mm)
- If the hydronic is present, the pump enclosure is acoustically insulated by a 30 mm thick lining of polyester fibres (Fiberform)

3.11 Electrical and control panel

Electrical and control panel built in accordance with EN60204-1 standard, complete with:
- general door lock isolator
- control circuit transformer
- IP44 protection
- power circuit with electric bus bar distribution system
- spring-type control circuit terminal board
- forced ventilation of the electrical board
- phases sequence control
- relays for voltage monitoring
- fuses and contactors for compressors and fans
- compressors protection with internal thermal overload
- electronic controller
- remote ON/OFF terminals
- terminals for cumulative alarm block
- Power supply 400V/3ph/50Hz
- Part-winding compressor start-up for sizes from da 0322 a 0472 /K, /SL-K, /E, /SL-E versions; Star-delta start-up for all other sizes (also for units equipped with HT kit).
- Pump control relay + 0-10V modulating signal to control an external variable speed pump with the VPF.E control logic (plant-side constant ΔT for plants with primary circuit only and terminals with bypass)

3.12 Certification and applicable directives
The unit complies with the following directives and relative amendments:
- EUROVENT Certification program
- CE Declaration of conformity certificate for the European Union
- EAC Product quality certificate for Russian Federation
- M&I Product quality certificate for Australia and New Zealand
- Machine directive 2006/42/EC
- PED Directive 2014/68/EC
- Low Voltage directive 2006/95/EC
- ElectroMagnetic compatibility directive 2004/108/EC
- ErP Directive 2009/125/EC
- ISO 9001 Company´s Quality Management System certification
- ISO 14001 Company´s Environmental Management System certification

3.13 Tests
Tests performed throughout the production process, as indicated in ISO9001.
Performance or noise tests can be performed by highly qualified staff in the presence of customers.
Performance tests comprise the measurement of:
- electrical data
- water flow rates
- working temperatures
- power input
- power output
- pressure drops on the water-side exchanger both at full load (at the conditions of selection and at the most critical conditions for the condenser) and at part load conditions.

During performance testing it is also possible to simulate the main alarm states.
Noise tests are performed to check noise emissions according to ISO9614.

3.14 Electronic control W3000+
W3000+ control is available with the new KIPlink (Keyboard In your Pocket) user interface. Based on WiFi technology, it allows one to operate on the unit directly from the smartphone or tablet.Using KIPlink, it is possible to turn the unit on and off, adjust the set-point, plot the main operating variables, monitor in detail the status of the refrigerant circuits, the compressors, the fans and the pumps (if present) and display and reset the possible alarms. The regulation features the continuous modulation of capacity, based on sequential adjustment + DIP referring to the leaving water temperature. Diagnostics include complete alarm management, with “blackbox” functions (via PC) and alarm log (display or PC) for best analysis of unit be haviour. The built-in clock can be used to create an operating profile containing up to 4 typical days and 10 time bands, essential for efficient programming of energy production. Optional proprietary devices can perform the adjustment of the resources in systems made of several units. Consumption metering and performance measurement are possible as well. The variable primary flow control is always available as per standard (VPF.E function). Supervision is available with different options, using proprietary devices or by integration into third party systems using ModBus, BACnet, BACnet-over-IP and Echelon LonWorks protocols. A dedicated wall-mounted keypad can be used for remote control of all the functions.

3.14 LAN Multi Manager (opt. 1540)
Up to 8 units (chillers or free-cooling chillers, with the same firmware version) can communicate via serial connection.
All the group functions are implemented with master/slave logic, with dynamic master.
Hereunder is a brief description of the main group functions, further details are available in the dedicated user manual.

- Load management
There are two possible load management logics: load sharing and sequencing.
- Load sharing: the load is distributed equally among the active units of the group.
- Sequencing: the units are activated one after the other. When the first unit is saturated (all the available resources are used), the second unit is activated, and so forth unit the load is fully covered.

- Dynamic master
In case of disconnection of the master unit, a new master is automatically elected among the other units, and the group functions remain active. The dynamic master function grants a backup solution to the net, overcoming the single point of failure typical of the static master architecture. Besides, it is possible to set the “master succession priority”: in case of the master unit disconnection, the new master is elected among the units set as priority.

- Stand-by unit management
It is possible to set the number of unit that remain in stand-by, the load will be managed (with load sharing or sequencing) among the other units of the group. The stand-by unit rotation is automatic, according to the running hours equalization. A stand-by unit is immediately activated in case of total failure or disconnection of one of the active units of the group, or in case the water temperature exceeds the safety threshold.

- Restart in sequence
After a power black-out, this group function coordinates the compressor activation time of the different units and prevents from dangerous current picks due to simultaneous start-ups. Besides, it is possible to set the activation sequence of the units.

- Resource priority management
To make the most of the available cooling resources, it is possible to set the usage priority of each unit. The load management function will be adjusted accordingly. When available, the free-cooling is always given priority and is fully exploited before activating any compressor. Then the activation of the compressors follows the priority level assigned to the units.

- Auxiliary input
The auxiliary inputs are applied at a group level:
- 4-20 mA: remote set-point adjustments (analog input).
- Double set-point: remote switch between 2 set-points (digital input).
- Demand limit: remote signal to limit the unit's activable resources (digital input).

3.15 Versions
/K - Key efficiency
Key efficiency units grant the best cooling capacity/footprint ratio.

/E - Very high efficiency
Very high efficiency units for the minimum investment payback time. High performing heat exchangers and generous heat exchanger's surfaces
The oversized condensing section ensures an appropriate heat exchange even in case of extremely high outdoor air temperature.

/SL-K - Super low noise, standard efficiency
Key efficiency units that grant the best cooling capacity/footprint ratio.
This version features a special soundproofing for the compressor compartment and the pumps (if present), a reduced fan speed and an oversized condensing section.
The fan speed is automatically increased in case of particularly tough environmental conditions.

/SL-E - Super low noise, very high efficiency
Very high efficiency units for the minimum investment payback time. High performing heat exchangers and generous heat exchanger's surfaces
The oversized condensing section ensures an appropriate heat exchange even in case of extremely high outdoor air temperature.
This version features a special soundproofing for the compressor compartment and the pumps (if present) and a reduced fan speed.
The fan speed is automatically increased in case of particularly tough environmental conditions.

3.16 Configurations
- , standard unit
Standard unit for production of chilled water

/D, unit with partial heat recovery
Unit for the production of chilled water, equipped with an auxiliary heat exchanger (desuperheater) on the compressor discharge for superheat recovery. The recovered heat is approximately the 20% of the total cooling capacity and can be used for domestic hot water production or other secondary uses, such as the integration of an existing boiler.

4.1 OPTIONS

OPTIONS	DESCRIPTIONS	BENEFITS	AVAILABLE FOR MODELS
1020 **REGULATIONS**			
1015 HEAT EXCHANGERS NSW CERTIFIED	Heat exchangers with SafeWork NSW certificate		ALL
1016 UNIT WITH PED RULES	Unit according to PED (Pressure Equipment Directive) rules		ALL
1019 HEAT EXCHANGERS AS1210 CERTIFIED	Heat exchangers AS1210 compliant (Australia Standard)		ALL
380 **NUMBERED WIRING**			
381 NUMBERED WIRING ON EL. BOARD	Electrical board wires are identified by numbered labels. The reference numbers are indicated in the unit's wiring scheme.	Facilitate maintainance interventions to the electrical board connections.	ALL
383 NUMBERED WIRINGS+UK REQUESTS	Electrical board wires are identified by numbered labels. The reference numbers are indicated in the unit's wiring scheme.	Facilitate maintainance interventions to the electrical board connections.	ALL
3300 **COMPRESSOR REPHASING**			
3301 COMPR.POWER FACTOR CORR.	Capacitors on the compressors' power inlet line.	The unit's average cos(phi) increases.	ALL
1510 **SOFT-STARTER**			
1511 UNIT WITH SOFT-START	Electronic device adopted to manage the inrush current.	Break down of the inrush current compared to the direct motor start, lower motor windings' mechanical wear, avoidance of mains voltage fluctuations during starting, favourable sizing for the electrical system.	ALL
1513 UNIT WITH 3-PHASE SOFT-START	Electronic device adopted to manage the inrush current. The device controls the 3 phases.	Break down of the inrush current compared to the direct motor start, lower motor windings' mechanical wear, avoidance of mains voltage fluctuations during starting, favourable sizing for the electrical system.	ALL
3410 **AUTOMATIC CIRCUIT BREAKERS**			
3412 AUTOM. CIRCUIT BREAK. ON LOADS	Over-current switch on the major electrical loads.	In case of overcurrent allows resetting of the switch without the replacement of relative fuses.	ALL
3600 **COMPRESSOR RUN STATUS SIGNAL**			
3601 COMPRESSOR OPERATION SIGNAL	Auxiliary contacts providing a voltage-free signal.	Allows remote signalling of compressor's activation or remote control of any auxiliary loads.	ALL
4180 **REMOTE CONNECTION ARRANGEMENT**			
4181 SERIAL CARD MODBUS	Interface module for ModBUS protocols.	Allows integration with BMS operating with ModBUS protocol.	ALL
4182 SERIAL CARD FOR LONWORKS	Interface module for Echelon systems.	Allows integration with BMS operating with LonWorks protocols	ALL
4184 SERIAL CARD BACNET MS/TP RS485	Interface module for BACnet protocols.	Allows integration with BMS operating with BACnet protocol.	ALL
4185 SERIAL CARD FOR BACNET OVER IP	Interface module for BACnet OVER-IP protocols.	Allows to interconnect BACnet devices over Internet Protocol within wide-area networks.	ALL
4186 SERIAL CARD FOR KONNEX	Protocol for KNX system	Allows integration with BMS operating with KNX protocol	ALL

OPTIONS

OPTIONS	DESCRIPTIONS	BENEFITS	AVAILABLE FOR MODELS
4187 M-Net W3000 INTERFACE KIT	Interface kit for M-Net protocol.	Interface module to allow the integration of the unit with Mitsubishi Electric proprietary communication protocol M-Net.	ALL
4188 SERIAL CARD MODBUS TCP/IP	Interface module for ModBus TCP/IP protocol	Allows integration with BMS operating with ModBus TCP/IP protocol.	ALL
4189 SERIAL CARD SNMP	Interface module for SNMP protocol	Allows integration with BMS operating with SNMP protocol.	ALL
6160 **AUXILIARY INPUT**			
6161 AUXILIARY SIGNAL 4-20mA	4-20 mA analog input	Allows to change the operating set-point according to the value of current applied to the analogue input.	ALL
6162 REMOTE SIGNAL DOUBLE SP	Allows to activate the Energy Saving set-point.	Allows to change the operating set-point according to a remote switch	ALL
6170 **DEMAND LIMIT**			
6171 INPUT REMOTE DEMAND LIMIT	Digital input (voltage free)	It permits to limit the unit's power absorption for safety reasons or in temporary situation.	ALL
1470 **MULTIFUNCTION CARD**			
1431 NIGHT MODE	The option includes a related controller expansion board and dedicated terminal block.	Night mode is a system setting to limit maximum noise level of the unit. Noise level is reduced limiting maximum compressor frequency and fan speed.	ALL
1471 4951 + 1431	The option includes a related controller expansion board and dedicated terminal block.	Enables the functions corresponding to the indicated accessory codes.	ALL
1472 4951 + 1431 + 4961	The option includes a related controller expansion board and dedicated terminal block (it is necessary to install a 3 way valve).	Enables the functions corresponding to the indicated accessory codes.	ALL
1473 4951 + 4961	The option includes a related controller expansion board and dedicated terminal block (it is necessary to install a 3 way valve).	Enables the functions corresponding to the indicated accessory codes.	ALL
1474 1431 + 4961	The option includes a related controller expansion board and dedicated terminal block (it is necessary to install a 3 way valve).	Enables the functions corresponding to the indicated accessory codes.	ALL
1475 4962 + 4951	The option includes a related controller expansion board and dedicated terminal block (it is necessary to install a 3 way valve).	Enables the functions corresponding to the indicated accessory codes.	ALL
1476 4962 + 1431	The option includes a related controller expansion board and dedicated terminal block (it is necessary to install a 3 way valve).	Enables the functions corresponding to the indicated accessory codes.	ALL
1477 4962 + 4951 + 1431	The option includes a related controller expansion board and dedicated terminal block (it is necessary to install a 3 way valve).	Enables the functions corresponding to the indicated accessory codes.	ALL
4951 WITH HYDRAULIC DECOUPLER PROBE	Water temperature probe on hydraulic decoupler.	The pump activation can be set by parameter according to the water temperature on buffer tank measuring by the sensor (in the systems with the primary and secondary circuits separated by a hydraulic decoupler), thus bringing significant pump consumption reduction during unit's stand-by.	ALL

OPTIONS

OPTIONS	DESCRIPTIONS	BENEFITS	AVAILABLE FOR MODELS
4961 U.L.C.F. - WITH OR WITHOUT FIX SPEED PUMP	Option to be selected with the unit without pump/s or with fix speed pump/s (4703,4706,4707,4711,4712). The option includes a related controller expansion board and dedicated terminal block.	Guaranteed the start-up of the units with the option U.L.C. even when the critical working condition could generate an alarm. The W3000+ controller can manage a 3 way mixing valve (not provided from MEHITS) by 0-10V signal for ensuring a dynamic control of the water temperature on user heat exchanger according to the operating limits allowed. This ensures the start-up and correct functioning of the unit into the envelope, also even critical whether condition.	ALL
4962 U.L.C.F. - WITH VARIABLE WATER FLOW	Option to be selected with the unit with variable speed pump/s (4713,4714,4717,4718,4722,4723). The option includes a related controller expansion board and dedicated terminal block.	Guaranteed the start-up of the units with the option U.L.C. even when the critical working condition could generate an alarm. The W3000+ controller can manage a 3 way mixing valve (not provided from MEHITS) by 0-10V signal for ensuring a dynamic control of the water temperature on user heat exchanger according to the operating limits allowed. This ensures the start-up and correct functioning of the unit into the envelope, also even critical whether condition.	ALL
1440 **USER INTERFACE**			
1442 KIPlink +7 INCH TOUCH SCREEN	In addition to KIPlink, the innovative user interface based on WiFi technology, the unit is equipped with the Touch interface, with a 7” WVGA colour display and a front USB port (WARNING: with outdoor temperature below 0°C the display response time may visibly increase).		ALL
1444 KIPlink + LARGE KEYBOARD	The unit is equipped with KIPlink, the innovative user interface based on WiFi technology, and, in addition, the physical LCD keyboard.		ALL
6194 LARGE KEYBOARD	The unit is equipped with the Large keyboard with a wide LCD display and led icons.		ALL
6195 7 INCH TOUCH SCREEN	The unit is equipped with the Touch interface, with a 7” WVGA colour display and a front USB port (WARNING: with outdoor temperature below 0°C the display response time may visibly increase).	The touch-screen's technology is characterized by an easy-to-access data, and it allows an effective graphical representation of the main figures protecting the access through 3 privilege levels.	ALL
6196 KIPlink	The unit is equipped with KIPlink, the innovative user interface based on WiFi technology		ALL
3420 **LIGHTS ON ELECTRIC BOARD**			
3422 LIGHTS ON EL. BOARD+POWER SHOK	230V power socket in the electrical board, CEE 7/3 type (Schuko). The maximum power available is 500VA. Electrical board equipped with lights.	It allows to power small electrical/electronic devices (lights, notebooks, tablets, etc.) during maintenance operations. The interior lighting simplifies maintenance and operations to the electrical panel.	ALL
3390 **ANTICONDENSATE HEATER EL.BOARD**			
3391 ELECTRIC HEATER ON EL. BOARD	Electrical heater fed directly from the unit, is automatically activated at temperatures internal QE below 30 ° C (off state at T higher than 40 ° C).	It avoids the risk of humidity condensation on the electrical panel.	ALL

OPTIONS

OPTIONS	DESCRIPTIONS	BENEFITS	AVAILABLE FOR MODELS
5920 **MANAGEMENT & CONTROL SYSTEMS**			
5922 ClimaPRO ModBUS RS485 - MID	This option includes the following devices on-board the unit panel: - MID certified network analyzer operating on ModBUS over RS-485 - Current transformers - Software release LA09 or later version.	This accessory allows to acquire the electrical data and the power absorbed by the unit and communicate with ClimaPRO via high level communication interface based on ModBUS over EIA RS-485. More specifically, the data collected are: power supply, current, frequency, power factor (cos_{φ}), electrical power consumption, energy consumption. This specific energy meter model is MID certified and can therefore be used for billing applications. This option also ensures the compatibility between the units and ClimaPRO, thus allowing ClimaPRO to acquire all the main unit's operating variables and status by means of a high level communication interface to the controller installed onboard the unit panel.	ALL
5923 ClimaPRO BacNET over IP	This option includes the following devices on-board the unit panel: - network analyzer operating on BACnet over IP - Current transformers - Software release LA09 or later version.	This accessory allows to acquire the electrical data and the power absorbed by the unit and communicate with ClimaPRO via high level communication interface based on BACnet over IP. More specifically, the data collected are: power supply, current, frequency, power factor (cos_{φ}), electrical power consumption, energy consumption. This network analyzer is not MID certified and cannot therefore be used for billing applications. This option also ensures the compatibility between the units and ClimaPRO, thus allowing ClimaPRO to acquire all the main unit's operating variables and status by means of a high level communication interface to the controller installed onboard the unit panel.	ALL
5924 ENERGY METER FOR BMS	This option includes the following devices on-board the unit panel: - network analyzer with display operating on ModBUS protocol over RS-485 (without certification MID) - current transformers.	This accesory allows to acquire the electrical data and the power absorbed by the unit and send them via RS-485 bus to the BMS for energy metering.	ALL
5925 ENERGY METER FOR W3000	This option includes all following devices on-board the unit panel: - network analyzer with display, already cabled to unit's controller - current transformers.	This option allows to acquire the electrical data and the power absorbed by the unit. The figures are accessible through the unit's W3000 interface, and be sent to the BMS via several protocols by selecting the dedicated serial card in the option list.	ALL
3430 **REFRIGERANT LEAK DETECTOR**			
3431 REFRIG. LEAK DETECTOR	Refrigerant leak detection system, supplied factory mounted and wired in the electrical board. In case of leak detection it will raise an alarm.	It promptly detects gas leakages	ALL
3433 GAS LEAK CONTACT + COMPR. OFF	Refrigerant leak detection system, supplied factory mountedand wired in the electrical board. In case of leak detection it will raise an alarm and stop the unit.	It promptly detects gas leakages and stops the unit	ALL
820 **FAN CONTROL**			
808 EC FANS	Electronically commutated fans (EC fans). The brushless motor, governed by a special controller, continuously adjust fans' speed.	Reduced energy consumption and minimized current's absorption during start-up phase. The efficiency is increased by apporximately: +1% of EER and +4/5% of ESEER. The noise reduces proportionally to the unit's partialization.	ALL

OPTIONS

OPTIONS	DESCRIPTIONS	BENEFITS	AVAILABLE FOR MODELS
818 OVERSIZED EC FANS	Fans with oversized EC motor	Extends the operating limits of the unit. Further information in the dedicated databook section.	ALL
1950 **HIGH TEMPERATURE DEVICE**			
1955 KIT HT	Kit to increase the unit's operating range.	Full load operation is guaranteed up to over 50°C of outdoor temperature (the limit depends on the unit version, further details are available in the operating limit section). In case of outdoor air temperature higher than 53°C, some additional cooling equipment for the electrical panel could be necessary (please refer to our sales department for assessment and quotation).	ALL
1960 **PRESSURE RELIEF VALVES**			
1961 DUAL RELIEF VALVES WITH SWITCH	Dual relief valve with switch	Allows to unselect a relief valve in order to service the unit avoiding medium or long inoperative periods	ALL
1400 **HP AND LP GAUGES**			
1401 HP AND LP GAUGES	High and low pressure gauges	Allows immediate reading of the pressure values on both low and high pressure circuits	ALL
1900 **COMPRESSOR SUCTION VALVE**			
1901 COMPRESSOR SUCTION VALVE	Shut-off valve on compressor's suction circuit.	Simplifies maintenance activities	ALL
870 **OPERATION RANGE UNIT**			
871 NEGATIVE FLUID TEMPERATURE	Compressor's liquid injection	It permits the compressor works properly with high compression efficiency with negative evaporator leaving temperature	ALL
2880 **EVAPORATOR WATER DELTA 10°C**			
2881 EVAPORATOR FOR DELTA T>8°C	Evaporator dedicated to work with low primary circuit waterflow.	The heat exchange takes place under efficient conditions and the favorable sizing of primpary pumps allows a considerable pumping energy saving.	ALL
2630 **INSULATION ON EXCHANGERS**			
2631 DOUBLE INSULATION ON EXCHANGERS	Thermal insulation in closed-cell flexible elastomeric foam (FEF) of 16 mm coupled with a 3 mm layer of reticulated foam in PE and an exterior embossed finishing PE film. This option is mandatory if the unit is supposed to work with outdoor temperature below -10°C.	Reduces heat losses and prevent from condensate problems.	ALL
2633 DOUBLE INSULATION ON EXCH+PIPES+PUMPS	Thermal insulation on heat exchangers in closed-cell flexible elastomeric foam (FEF) of 16 mm coupled with a 3 mm layer of reticulated foam in PE and an exterior embossed finishing PE film. Thermal insulation on pumps and pipes in closed-cell reticulated foam in PE of 20 mm. This option is mandatory if the unit is supposed to work with outdoor temperature below -10°C.	Reduces heat losses and prevent from condensate problems.	ALL

OPTIONS

OPTIONS	DESCRIPTIONS	BENEFITS	AVAILABLE FOR MODELS
990 **CONDENSING COIL**			
876 E-COATING MICROCHANNEL COILS	The heat exchanger is completely treated by electrolysis so as to create a protective layer of epoxy polymer on the surface, with the following characteristics: - over 3120 hours of salt spray protection as per ASTM G85-02 A3 (SWAAT); - polyurethane surface protection against UV rays.	Provides a very high resistance against corrosion, also in very aggressive environments. For further information please refer to the Guidelines “Finned coil heat exchangers and protection against corrosion”, available in the download section of the website www.melcohit.com/EN/Download/Corporate/GUIDELINES or contact our sales department.	ALL
4700 **EV - HYDRONIC MODULE**			
4708 EV - 2 PUMPS 4P LH (FIX SPEED)	Evaporator hydronic module, compatible with constant flow control. The unit is provided with 2 fixed speed pumps, with 4-pole motor. Residual head of 100 kPa approximately. The pumps are controlled in duty/standby, with running hours equalization and changeover on device failure. Specifications and characteristic curves are available in the dedicated bulletin section.	The hydronic module includes the pumps and the main water circuit components, thus optimizing hydraulic and electrical installation space, time and costs.	ALL
4711 EV - 2 PUMPS 2P LH (FIX SPEED)	Evaporator hydronic module, compatible with constant flow control. The unit is provided with 2 fixed speed pumps, with 2-pole motor. Residual head of 100 kPa approximately. The pumps are controlled in duty/standby, with running hours equalization and changeover on device failure. Specifications and characteristic curves are available in the dedicated bulletin section.	The hydronic module includes the pumps and the main water circuit components, thus optimizing hydraulic and electrical installation space, time and costs.	ALL
4712 EV - 2 PUMPS 2P HH (FIX SPEED)	Evaporator hydronic module, compatible with constant flow control. The unit is provided with 2 fixed speed pumps, with 2-pole motor. Residual head of 200 kPa approximately. The pumps are controlled in duty/standby, with running hours equalization and changeover on device failure. Specifications and characteristic curves are available in the dedicated bulletin section.	The hydronic module includes the pumps and the main water circuit components, thus optimizing hydraulic and electrical installation space, time and costs.	ALL
4713 EV - RELAY 1 PUMP + 0-10V SIG	Evaporator hydronic module, compatible with constant or variable flow control. The unit is provided with 1 relay and a 0-10V signal terminal to control the activation and the speed of 1 external variable speed pump.	The hydronic module controls the external pumps with the unit controller logic.	ALL
4714 EV - RELAY 2 PUMPS + 0-10V SIG	Evaporator hydronic module, compatible with constant or variable flow control. The unit is provided with 2 relays and a 0-10V signal terminal to control the activation and the speed of 2 external variable speed pump. The pumps are controlled in duty/standby, with running hours equalization and changeover on device failure.	The hydronic module controls the external pumps with the unit controller logic.	ALL
4719 EV - 2 PUMPS 4P LH (VAR SPEED)	Evaporator hydronic module, compatible with constant or variable flow control. The unit is provided with 2 variable speed pumps, with 4-pole motor. Residual head of 100 kPa approximately. The pumps are controlled in duty/standby, with running hours equalization and changeover on device failure. Specifications and characteristic curves are available in the dedicated bulletin section.	The hydronic module includes the pumps and the main water circuit components, thus optimizing hydraulic and electrical installation space, time and costs.	ALL

OPTIONS

OPTIONS	DESCRIPTIONS	BENEFITS	AVAILABLE FOR MODELS
4722 EV - 2 PUMPS 2P LH (VAR SPEED)	Evaporator hydronic module, compatible with constant or variable flow control. The unit is provided with 2 variable speed pumps, with 2-pole motor. Residual head of 100 kPa approximately. The pumps are controlled in duty/standby, with running hours equalization and changeover on device failure. Specifications and characteristic curves are available in the dedicated bulletin section.	The hydronic module includes the pumps and the main water circuit components, thus optimizing hydraulic and electrical installation space, time and costs.	ALL
4723 EV - 2 PUMPS 2P HH (VAR SPEED)	Evaporator hydronic module, compatible with constant or variable flow control. The unit is provided with 2 variable speed pumps, with 2-pole motor. Residual head of 200 kPa approximately. The pumps are controlled in duty/standby, with running hours equalization and changeover on device failure. Specifications and characteristic curves are available in the dedicated bulletin section.	The hydronic module includes the pumps and the main water circuit components, thus optimizing hydraulic and electrical installation space, time and costs.	ALL
4860 **EV - PRIMARY FLOW CONTROL**			
4861 EV - CONSTANT FLOW	Evaporator water flow control (plant primary circuit): constant flow. Compatible with hydronic modules without regulation devices (no pumps, no contacts), with ON/OFF regulation devices (relays) or with fixed speed pumps (codes: 4701, 4702, 4703, 4704, 4705, 4706, 4707, 4708, 4709, 4711, 4712 - hydronic modules availability depends on unit model).	The unit is set up to operate with a constant water flow in the heat exchanger (plant primary circuit). This is the only option available in case of unit without any water flow regulation devices (no pumps, no contacts), which means with water flow control provided by others. In case of unit with ON/FF regulation devices or fixed speed pumps, the unit controller manages the pump activation to reduce pump consumption.	ALL
4862 EV - CONSTANT FLOW (PARAMETER)	Evaporator water flow control (plant primary circuit): constant flow (parameter set). Compatible with hydronic modules with modulating regulation devices (0-10V signal) or with variable speed pumps (codes: 4713, 4714, 4715, 4716, 4717, 4718, 4719, 4721, 4722, 4723 - hydronic modules availability depends on unit model).	The unit is set up to operate with a constant water flow in the heat exchanger (plant primary circuit). The unit controller manages the pump activation to reduce pump consumption. The pump speed is adjusted via 0-10V signal. The option provides the possibility to set the pump speed with a controller parameter. Once set, the speed pump remains constant until the next parameter adjustment. The parameter set constant flow control is useful during the unit installation and commissioning, to adjust water flow and pressure head according to the real plant characteristics.	ALL

OPTIONS

OPTIONS	DESCRIPTIONS	BENEFITS	AVAILABLE FOR MODELS
4864 EV – VPF (w/o DP)(SU, MM_PR)	Evaporator water flow control (plant primary circuit): variable flow (delta P control). Only for single unit systems or unit with option 1541 (Multi Manager - Priority Master) if available. Compatible with hydronic modules with modulating regulation devices (0-10V signal) or with variable speed pumps (codes: 4713, 4714, 4715, 4716, 4717, 4718, 4719, 4721, 4722, 4723 - hydronic modules availability depends on unit model). The option includes: differential pressure transducer on the unit's heat exchanger and related controller expansion board, controller expansion board to read the plant side differential pressure transducer (4-20mA signal) and manage the hydraulic by-pass valve opening (0-10V signal). Compulsory equipment, supplied by others: plant side differential pressure transducer, plant side hydraulic by-pass valve.	The unit is set up to operate with a variable water flow in the heat exchanger (plant primary circuit). The unit controller manages the pump activation to reduce pump consumption. The pump speed is adjusted via 0-10V signal. The option provides a pump speed management based on the VPF (Variable Primary Flow) function. It keeps the delta P constant on the plant side (primary circuit), thus bringing significant pump consumption reduction during part load operation. The VPF function is applicable in systems with only the primary circuit. Further information available in the dedicated bulletin section.	ALL
4865 EV – VPF (w DP)(SU, MM_PR)	Evaporator water flow control (plant primary circuit): variable flow (delta P control). Only for single unit systems or unit with option 1541 (Multi Manager - Priority Master) if available. Compatible with hydronic modules with modulating regulation devices (0-10V signal) or with variable speed pumps (codes: 4713, 4714, 4715, 4716, 4717, 4718, 4719, 4721, 4722, 4723 - hydronic modules availability depends on unit model). The option includes: differential pressure transducer on the unit's heat exchanger and related controller expansion board, plant side differential pressure transducer (installation by others), controller expansion board to read the plant side differential pressure transducer (4-20mA signal) and manage the hydraulic by-pass valve opening (0-10V signal). Compulsory equipment, supplied by others: plant side hydraulic by-pass valve.	The unit is set up to operate with a variable water flow in the heat exchanger (plant primary circuit). The unit controller manages the pump activation to reduce pump consumption. The pump speed is adjusted via 0-10V signal. The option provides a pump speed management based on the VPF (Variable Primary Flow) function. It keeps the delta P constant on the plant side (primary circuit), thus bringing significant pump consumption reduction during part load operation. The VPF function is applicable in systems with only the primary circuit. Further information available in the dedicated bulletin section.	ALL
4866 EV – VPF (M3000, CPRO, MM_N-PR)	Evaporator water flow control (plant primary circuit): variable flow (delta P control). Only for multi-unit systems with external controller (Manager3000 or ClimaPRO) or unit with option 1542 (Multi Manager - Non Priority Master) if available. Compatible with hydronic modules with modulating regulation devices (0-10V signal) or with variable speed pumps (codes: 4713, 4714, 4715, 4716, 4717, 4718, 4719, 4721, 4722, 4723 - hydronic modules availability depends on unit model). The option includes: differential pressure transducer on the unit's heat exchanger and related controller expansion board. It shall be the customer responsibility to configure the multi-unit control system (Manager3000, ClimaPRO or Multi Manager Priority Master) with option VPF.	The unit is set up to operate with a variable water flow in the heat exchanger (plant primary circuit). The unit controller manages the pump activation to reduce pump consumption. The pump speed is adjusted via 0-10V signal. The option provides a pump speed management based on the VPF (Variable Primary Flow) function. It keeps the delta P constant on the plant side (primary circuit), thus bringing significant pump consumption reduction during part load operation. The VPF function is applicable in systems with only the primary circuit. Further information available in the dedicated bulletin section.	ALL

OPTIONS

OPTIONS	DESCRIPTIONS	BENEFITS	AVAILABLE FOR MODELS
4867 EV - VPF.D (SU, MM_PR)	Evaporator water flow control (plant primary circuit): variable flow (delta T control). Only for single unit systems or unit with option 1541 (Multi Manager - Priority Master) if available. Compatible with hydronic modules with modulating regulation devices (0-10V signal) or with variable speed pumps (codes: 4713, 4714, 4715, 4716, 4717, 4718, 4719, 4721, 4722, 4723 - hydronic modules availability depends on unit model). The option includes: 2 plant side NTC temperature sensors (installation by others).	The unit is set up to operate with a variable water flow in the heat exchanger (plant primary circuit). The unit controller manages the pump activation to reduce pump consumption. The pump speed is adjusted via 0-10V signal. The option provides a pump speed management based on the VPF.D (Variable Primary Flow with Decoupler) function. It keeps the delta T constant on the plant side (primary circuit), thus bringing significant pump consumption reduction during part load operation. The VPF.D function is applicable in systems with the primary and secondary circuits separated by a hydraulic decoupler. Further information available in the dedicated bulletin section.	ALL
4868 EV - VPF.D(M3000, CPRO, MM_N-PR)	Evaporator water flow control (plant primary circuit): variable flow (delta T control). Only for multi-unit systems with external controller (Manager3000 or ClimaPRO) or unit with option 1542 (Multi Manager - Non Priority Master) if available. Compatible with hydronic modules with modulating regulation devices (0-10V signal) or with variable speed pumps (codes: 4713, 4714, 4715, 4716, 4717, 4718, 4719, 4721, 4722, 4723 - hydronic modules availability depends on unit model). It shall be the customer responsibility to configure the multi-unit control system (Manager3000, ClimaPRO or Multi Manager - Priority Master) with option VPF.D.	The unit is set up to operate with a variable water flow in the heat exchanger (plant primary circuit). The unit controller manages the pump activation to reduce pump consumption. The pump speed is adjusted via 0-10V signal. The option provides a pump speed management based on the VPF.D (Variable Primary Flow with Decoupler) function. It keeps the delta T constant on the plant side (primary circuit), thus bringing significant pump consumption reduction during part load operation. The VPF.D function is applicable in systems with the primary and secondary circuits separated by a hydraulic decoupler. Further information available in the dedicated bulletin section.	ALL
4869 EV - VPF.E	Evaporator water flow control (plant primary circuit): variable flow (delta T control). Compatible with hydronic modules with modulating regulation devices (0-10V signal) or with variable speed pumps (codes: 4713, 4714, 4715, 4716, 4717, 4718, 4719, 4721, 4722, 4723 - hydronic modules availability depends on unit model).	The unit is set up to operate with a variable water flow in the heat exchanger (plant primary circuit). The unit controller manages the pump activation to reduce pump consumption. The pump speed is adjusted via 0-10V signal. The option provides a pump speed management based on the VPF.E function. It keeps the delta T constant on the plant side (primary circuit), thus bringing significant pump consumption reduction during part load operation. The VPF.E function is applicable in systems with only the primary circuit and with the hydraulic terminals equipped 3 way valve (by-pass). Further information available in the dedicated bulletin section.	ALL

OPTIONS

OPTIONS	DESCRIPTIONS	BENEFITS	AVAILABLE FOR MODELS
1540 **ON BOARD MULTI MANAGER**			
1541 MM PRIORITY MASTER MM_PR	Multi Manager - Priority Master: integrated control of a group of chillers and chillers with free-cooling with up to 8 units with LAN logics and dynamic master. The unit is identified and parameterized as a Priority Master; therefore it is given preference in case of election of a new Master (in case of a failure of the current Master). At least one Priority Master must be present in the group. The maximum number of Priority Master units coincides with the number of connected units (up to 8). If you want to equip the group of chiller with auxiliary functions (e.g. 4-20 mA set point variation, pressure transducer for VPF system), each Priority Master requires auxiliary input signals. Consequently, for each Priority Master it is necessary to select these accessories from the price list and proceed with their wiring onsite. More details can be found in the data book and in the controls technical documentation.	It allows the management of a group of chillers and chillers with free-cooling (up to 8 units) via LAN with master/slave operating logic with dynamic master which always guarantees a back-up function to the network. The system makes other functions available such as load and stand-by unit management, resource use priority, unit start-up in sequence and group fast restart (when Fast Restart option is available). For more details refer to the dedicated section of the data book.	ALL
1542 MM NON PRIORITY MASTER MM_N-PR	Multi Manager - Non Priority Master: integrated control of a group of chillers and chillers with free-cooling with up to 8 units with LAN logics and dynamic master. The unit is identified and parameterized as a Non-Priority Master. Non-Priority Master units can become Masters (in case of a failure of the current Master) if there are no more Priority Master units available. In this case, the functions provided by the auxiliary signals are suspended (e.g. 4-20 mA set point variation, VPF); these signals can only be processed by Priority Master units. More details can be found in the data book and in the controls technical documentation.	It allows the management of a group of chillers and chillers with free-cooling (up to 8 units) via LAN with master/slave operating logic with dynamic master which always guarantees a back-up function to the network. The system makes other functions available such as load and stand-by unit management, resource use priority, unit start-up in sequence and group fast restart (when Fast Restart option is available). For more details refer to the dedicated section of the data book.	ALL
2910 **HYDRAULIC CONNECTIONS**			
2911 FLANGED HYDRAULIC CONNECTIONS	Grooved coupling with flanged counter-pipe user/source side.		ALL
3370 **D - HYDRONIC MODULE**			
3371 D - RELAY 1 PUMP (ON/OFF)	Desuperheater hydronic module. The unit is provided with 1 relay to control the activation of 1 external pump via single ON/OFF signal.	The hydronic module allows to control the external pumps with the unit controller logic. The partial heat recovery pumps are activated only when heat recovery is actually possible: compressors on, hot storage tank temperature lower than set-point and than compressor outlet gas temperature. The option minimizes pump consumption.	ALL
2430 **PIPING KIT ANTIFREEZE HEATER**			
2432 ANTIFREEZE PIPING, PUMPS	Electrical heaters on pipes and other hydraulic unit's components. This option is mandatory if the unit is supposed to work with outdoor temperature below 0°C. Only for units provided with on-board pumps.	It protects the unit against ice formation on its hydraulic components.	ALL

OPTIONS

OPTIONS	DESCRIPTIONS	BENEFITS	AVAILABLE FOR MODELS
2680 **WATER CONNECTIONS ORIENTATION**			
2686 EVAP. CONNECTION LEFT HAND SIDE			ALL
2340 **UNIT ENCLOSURE**			
2301 COMPRESS.ACOUSTICAL ENCLOSURE	Enclosure made from hot galvanised metal plate and painted with epoxy powder coat. The acoustic insulation availability depends on unit model, see the dedicated description in "Accessories notes".	It reduces the noise emissions and improves aesthetics.	ALL
2315 NOISE REDUCER	The option includes the fan speed reduction and the compressors' acoustical enclosure	The dedicated fans' speed calibration together with the soundproofing of the most critical components permit a significant noise reduction (for the precise performance of the unit with the Noise Reducer kit please refer to the selection software ELCA Studio).	ALL
2020 **ANTI-INTRUSION GRILLS**			
2021 ANTI-INTRUSION GRILLS	Anti-intrusions grills	Avoid the intrusion of solid bodies into the unit's structure.	ALL
1970 **LONG DISTANCE TRANSPORTATION**			
1971 REINFORCING BARS	Bars used to reinforce the structure	Improve resistance during long transportation	ALL
9970 **PACKING**			
9966 NYLON PACKING	Unit covered with nylon		ALL
9979 CONTAINER PACKING	Unit provided with container slides and covered with nylon		ALL
AC01 **ACCESSOR. SUPPLIED SEPARATELY**			
AC01 EVAPORATOR WATER FLOWSWITCH	Flow switch with stainless scoop AISI 316L and IP65 protection suitable for installation in industrial plant pipes. It should be installed in a straight pipe without filters, valves, etc., long at least 5 times its diameter, both upstream and downstream.	Signaling of lack of or excessive reduction of flow, it generates an alarm that is in automatic or manual reset depending on n ° alarms per hour and the maximum time of operation of the pump under conditions of low flow rate.	ALL
AC04 RUBBER TYPE ANTIVIBR.MOUNTING			ALL
AC05 SPRING TYPE ANTIVIBR.MOUNTING			ALL

Additional information - IMPORTANT -

/D, unit with partial heat recovery
The option leads to an extension of the lead time, contact our sales department for information.

1015 - Heat exchangers NSW certified
1019 - Heat exchangers AS1210 certified
The certification is available for the evaporator only. If the certification is required also for the recovery heat exchanger (versions /D), please contact our sales department.

3301 – Compressor power factor correction
The option leads to an extension of the lead time, contact our sales department for information.

3301 - Compressor power factor correction
1511 - Unit with soft start
There is a mutual exclusion rule between the compressor rephrasing capacitors and the soft-start device. When both accessories are required together, a feasibility analysis is needed. If the configuration is available as a special execution, an extra-price may be quoted.

1511 - Unit with soft-start
The device has an effect on 2 phases.

1513 - Unit with 3-phase soft-start
The option leads to an extension of the lead time and could entail a unit length increase. For further information, please contact our sales department.

1511 - Unit with soft-start
1513 - Unit with 3-phase soft-start
The accessory requires the use of automatic circuit breakers on loads:
3412 - Automatic circuit breakers on loads.

3431 - Refrigerant leak detector
3433 - Refrigerant leak detector + compressors off
The accessory requires the compressor enclosure. The compressor enclosure the standard in the silenced units (versions: SL-K; SL-E).
For the not-silenced units (versions: K; E), please select one of the following accessories:
2301 - Compressor acoustical enclosure
2315 - Noise Reducer.

4962 - U.L.C.F. – With variable water flow
1475 – 4962 + 4951
1476 – 4962 + 1431
1477 – 4962 + 4951 + 1431
These options lead to an extension of the lead time, contact our sales department for information.

1955 - Kit HT
Not available for versions /K and SL-K, sizes 1262-1322-1402 and version E, size 1402.
The accessory could entail a unit length increase. For further information, please contact our sales department.
The performance calculation with HT kit is not available in the selection software for evaporator leaving water temperature between 18 ° C and 20 ° C, keep the performance constant and equal to that of 18 ° C at the selection outdoor air temperature.
In case of outdoor air temperature higher than 46°C, only option 818 – Oversized EC fans is available (opt. 808 EC Fans are not suitable to operate over 46°C of outdoor temperature).

808 - EC fans
These fans are suitable to operate up to 46°C of outdoor temperature.
In case of higher temperatures, fans with oversized motors must be used.

818 – Oversized EC fans
This option allows to provide an available static pressure at the air discharge of the fans. Units with this option are suitable to win maximum air pressure drop of 150 Pa.
From 100 Pa to 150 Pa there is a reduction of the maximum outdoor air temperature admitted. 150 Pa are available at 43°C for /K version and at 48°C for /E version.
This option is not compatible with opt. 2315 - Noise Reducer.
The option leads to an extension of the lead time, contact our sales department for information.

2301 – Compressor acoustical enclosure
Soundproofing insulation characteristics: 30 mm thick Fiberform (polyester fibres).
Sound power reduction: -2 dB(A).
This option is not compatible with opt. 2315 – Noise Reducer.

2315 - Noise Reducer
Soundproofing insulation characteristics: 30 mm thick Fiberform (polyester fibres). Fan speed reduction.
Sound power reduction: -7 dB(A).

4708 - EV - 2 PUMPS 4P LH (FIX SPEED)
4711 - EV - 2 PUMPS 2P LH (FIX SPEED)
4712 - EV - 2 PUMPS 2P HH (FIX SPEED)
4719 - EV - 2 PUMPS 4P LH (VAR SPEED)
4722 - EV - 2 PUMPS 2P LH (VAR SPEED)
4723 - EV - 2 PUMPS 2P HH (VAR SPEED)
The pump group may increase the unit's length up 1250 mm. For further information, please contact our sales department.

4864 - EV VPF (w/o DP)(SU, MM PR)
4865 - EV - EV-VPF (w DP)(SU, MM PR)
4866 - EV - EV-VPF.D (SU, MM PR)
With these accessories, the minimum leaving water temperature admitted is 5°C.

4867 - EV-VPF (M3000, CPRO, MM N-PR)
4868 - EV-VPF.D(M3000, CPRO, MM N-PR)
With these accessories, the minimum leaving water temperature admitted is 5°C.

1541 – Multi Manager – Priority Master
1542 – Multi Manager – Non-Priority Master
These options are not compatible with options:
5922 - ClimaPRO ModBUS RS485 – MID
5923 - ClimaPRO BacNET over IP.

1541 – Multi Manager – Priority Master
This option is not compatible with options:
4866 – EV-VPF (M3000, CPRO, MM N-PR) (VPF option for plants with Manager3000, ClimaPro and Non-Priority Master)
4868 – EV-VPF.D(M3000, CPRO, MM N-PR) (VPF option for plants with Manager3000, ClimaPro and Non-Priority Master).

OPTIONS

1542 – Multi Manager – Non-Priority Master
This option is not compatible with options:
4864 – EV-VPF (w/o DP)(SU, MM PR) (VPF option for plants with a Single Unit or for Priority Master units – plant side differential pressure transducer excluded).
4865 – EV-VPF (w DP)(SU, MM PR) (VPF option for plants with a Single Unit or for Priority Master units – plant side differential pressure transducer included).
4867 – EV-VPF.D (SU, MM PR) (VPF.D option for plants with a Single Unit or for Priority Master units).

2686 – Evap. connect. left hand side
The option leads to an extension of the lead time, contact our sales department for information.

9979 – Container packing
The selection of one of these options is mandatory to let the units be shippable via container. These options provide low-profiled fans which can reduce the height of the units and permit the transport via container. The selection of these options increases the sound power level of the units of 1 dB(A).

AC01 - Evaporator water flow switch
The accessory is supplied loose.

3371 - D - Relay 1 pump (ON/OFF)
The operating diagram of the device is provided below.

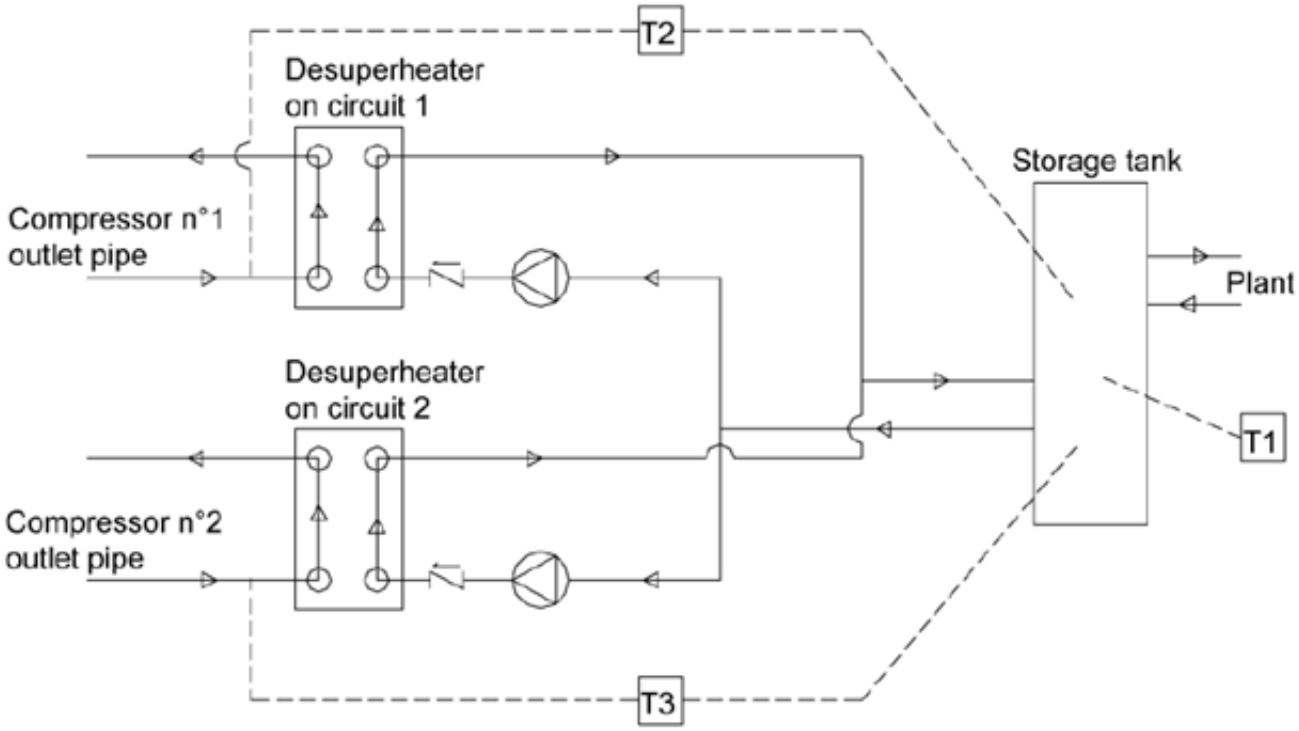

Fig. – Operating diagram of the “partial heat recovery control” function for a unit with two refrigerant circuits.

Note: the thermostats T1, T2 and T3 are supplied cabled. It is the customer’s responsibility to place the temperature probes in the storage tank.
The option lead to an extension of the lead time, contact our sales department for information.

OPTIONS

Chiller Plant Control with Active Optimization System

ClimaPRO System Manager

ClimaPRO System Manager represents the state-of-the-art platform for chiller plant management and control.
ClimaPRO ensures to actively optimize the entire chiller plant by managing and adjusting each component directly involved in the production and the distribution of the heating and the cooling energies, therefore involving chillers and heat pumps, pumping groups as well as the source-side devices like, for example, the cooling towers.

In particular, ClimaPRO measures in real-time all the operating variables from the field, for each individual device and each of the main system branche, by using serial communication lines as well as dedicated analogue signals.

The acquired data are then compared with the design data of each single unit at any different working conditions, thus allowing to implement control strategies based on dynamic algorithms which take into account the real operating conditions.

On the basis of these values, an advanced diagnostic module also allows to assess the level of efficiency for each individual unit, translating data into easy-to-read information in order to simplify and optimize the maintenance activities.

The “Chart Builder” software module allows to display the trends of the main operating variables. The “Reporting” module allows to send reports to selected users, including data and system’s status of the main devices as well as to perform calculation of the energy indexes for each single unit and for the entire chiller plant.

The accessibility to ClimaPRO System Manager is ensured by an integrated web server that makes it visible from any computer equipped with a web browser, either locally or remotely.

5.1 GENERAL TECHNICAL DATA FX2-G01 /K

[SI System]

FX2-G01 /K			0322	0352	0402	0472	0512	0572	0652	0702	0772	0852
Power supply		V/ph/Hz	400/3/50	400/3/50	400/3/50	400/3/50	400/3/50	400/3/50	400/3/50	400/3/50	400/3/50	400/3/50
PERFORMANCE												
COOLING ONLY (GROSS VALUE)												
Cooling capacity	(1)	**kW**	**322,1**	**350,2**	**411,9**	**464,4**	**516,7**	**573,4**	**645,8**	**707,6**	**779,8**	**862,9**
Total power input	(1)	kW	100,6	117,0	130,7	143,5	169,3	185,1	203,6	234,8	249,9	267,4
EER	(1)	kW/kW	3,202	2,993	3,151	3,236	3,052	3,098	3,172	3,014	3,120	3,227
ESEER	(1)	kW/kW	4,440	4,450	4,500	4,510	4,430	4,470	4,480	4,490	4,490	4,450
COOLING ONLY (EN14511 VALUE)												
Cooling capacity	(1)(2)	**kW**	**321,8**	**349,8**	**411,5**	**463,9**	**516,2**	**572,9**	**645,2**	**707,0**	**779,1**	**862,3**
EER	(1)(2)	kW/kW	3,170	2,960	3,120	3,190	3,020	3,060	3,130	2,980	3,080	3,190
ESEER	(1)(2)	kW/kW	4,310	4,300	4,340	4,320	4,290	4,290	4,300	4,330	4,300	4,290
COOLING WITH PARTIAL RECOVERY												
Cooling capacity	(3)	kW	334,2	363,3	427,4	481,9	536,0	594,9	670,0	734,2	809,0	895,3
Total power input	(3)	kW	97,31	113,2	126,4	138,8	163,8	179,1	197,0	227,1	241,8	258,7
Desuperheater heating capacity	(3)	**kW**	**82,98**	**97,69**	**108,2**	**117,9**	**141,0**	**153,4**	**168,2**	**196,0**	**207,8**	**221,7**
EXCHANGERS												
HEAT EXCHANGER USER SIDE IN REFRIGERATION												
Water flow	(1)	l/s	15,40	16,75	19,70	22,21	24,71	27,42	30,88	33,84	37,29	41,27
Pressure drop at the heat exchanger	(1)	kPa	27,7	32,7	38,8	49,4	37,3	46,0	46,6	44,5	54,1	47,2
PARTIAL RECOVERY USER SIDE IN REFRIGERATION												
Water flow	(3)	l/s	4,005	4,715	5,221	5,690	6,806	7,403	8,119	9,460	10,03	10,70
Pressure drop at the heat exchanger	(3)	kPa	30,6	42,4	51,9	30,6	43,8	51,9	30,8	41,8	35,2	31,2
REFRIGERANT CIRCUIT												
Compressors nr.		N°	2	2	2	2	2	2	2	2	2	2
Number of capacity steps		N°	0	0	0	0	0	0	0	0	0	0
No. Circuits		N°	2	2	2	2	2	2	2	2	2	2
Regulation			STEPLESS	STEPLESS	STEPLESS	STEPLESS	STEPLESS	STEPLESS	STEPLESS	STEPLESS	STEPLESS	STEPLESS
Min. capacity step		%	21	21	21	21	21	21	21	21	21	21
Refrigerant			R134a	R134a	R134a	R134a	R134a	R134a	R134a	R134a	R134a	R134a
Refrigerant charge		kg	50,0	53,0	63,0	72,0	78,0	87,0	100	106	118	132
Oil charge		kg	30,0	30,0	30,0	30,0	44,0	41,0	38,0	38,0	49,0	60,0
Rc (ASHRAE)	(4)	kg/kW	0,16	0,15	0,15	0,16	0,15	0,15	0,16	0,15	0,15	0,15
FANS												
Quantity		N°	4	4	5	6	6	7	8	8	9	10
Air flow		m^3/s	21,27	21,27	26,58	31,90	31,90	37,22	42,53	42,53	47,85	53,17
Fans power input		kW	1,90	1,90	1,90	1,90	1,90	1,90	1,90	1,90	1,90	1,90
NOISE LEVEL												
Sound Pressure	(5)	dB(A)	67	67	67	68	68	68	68	70	69	69
Sound power level in cooling	(6)(7)	dB(A)	99	99	99	100	100	100	100	102	102	102
SIZE AND WEIGHT												
A	(8)	mm	2750	2750	4000	4000	4000	5250	5250	5250	6500	6500
B	(8)	mm	2260	2260	2260	2260	2260	2260	2260	2260	2260	2260
H	(8)	mm	2640	2640	2640	2640	2640	2640	2640	2640	2640	2640
Operating weight	(8)	kg	3120	2950	3600	3730	4570	5060	5190	5550	6400	6980

Notes:
1 Plant (side) cooling exchanger water (in/out) 12,00°C/7,00°C; Source (side) heat exchanger air (in) 35,0°C.
2 Values in compliance with EN14511
3 Plant (side) cooling exchanger water (in/out) 12,00°C/7,00°C; Source (side) heat exchanger air (in) 35,0°C; Plant (side) heat exchanger recovery water (in/out) 40,00°C/45,00°C.
4 Rated in accordance with AHRI Standard 550/590
5 Average sound pressure level at 10m distance, unit in a free field on a reflective surface; non-binding value calculated from the sound power level.
6 Sound power on the basis of measurements taken in compliance with ISO 9614.
7 Sound power level in cooling, outdoors.
8 Unit in standard configuration, without optional accessories.
- Not available
Data certified in EUROVENT

GENERAL TECHNICAL DATA FX2-G01 /K

[SI System]

FX2-G01 /K			0902	1002	1052	1102	1152	1222	1262	1322	1402	1503
Power supply		V/ph/Hz	400/3/50	400/3/50	400/3/50	400/3/50	400/3/50	400/3/50	400/3/50	400/3/50	400/3/50	400/3/50
PERFORMANCE												
COOLING ONLY (GROSS VALUE)												
Cooling capacity	(1)	**kW**	**937,3**	**996,0**	**1056**	**1098**	**1139**	**1232**	**1264**	**1332**	**1400**	**1506**
Total power input	(1)	kW	289,7	309,8	336,9	362,5	347,9	389,1	415,5	426,0	466,1	466,4
EER	(1)	kW/kW	3,235	3,215	3,134	3,029	3,274	3,166	3,042	3,127	3,004	3,229
ESEER	(1)	kW/kW	4,460	4,460	4,460	4,470	4,460	4,500	4,470	4,460	4,490	4,440
COOLING ONLY (EN14511 VALUE)												
Cooling capacity	(1)(2)	**kW**	**936,6**	**995,2**	**1055**	**1097**	**1138**	**1231**	**1264**	**1331**	**1399**	**1505**
EER	(1)(2)	kW/kW	3,200	3,170	3,100	2,990	3,230	3,120	3,010	3,090	2,970	3,190
ESEER	(1)(2)	kW/kW	4,280	4,280	4,300	4,290	4,280	4,290	4,310	4,290	4,300	4,270
COOLING WITH PARTIAL RECOVERY												
Cooling capacity	(3)	kW	972,5	1033	1096	1139	1181	1278	1312	1382	1453	1563
Total power input	(3)	kW	280,3	299,7	325,9	350,6	336,6	376,4	401,9	412,1	450,9	451,2
Desuperheater heating capacity	(3)	**kW**	**239,9**	**256,1**	**280,4**	**303,2**	**286,8**	**323,6**	**347,1**	**353,1**	**388,9**	**385,8**
EXCHANGERS												
HEAT EXCHANGER USER SIDE IN REFRIGERATION												
Water flow	(1)	l/s	44,82	47,63	50,51	52,49	54,45	58,92	60,46	63,71	66,96	72,03
Pressure drop at the heat exchanger	(1)	kPa	49,2	55,6	48,3	52,1	56,1	61,6	48,8	54,2	59,9	52,5
PARTIAL RECOVERY USER SIDE IN REFRIGERATION												
Water flow	(3)	l/s	11,58	12,36	13,54	14,64	13,84	15,62	16,76	17,04	18,77	18,62
Pressure drop at the heat exchanger	(3)	kPa	36,5	41,6	35,1	30,5	27,3	34,8	30,9	32,0	38,8	41,8
REFRIGERANT CIRCUIT												
Compressors nr.		N°	2	2	2	2	2	2	2	2	2	3
Number of capacity steps		N°	0	0	0	0	0	0	0	0	0	0
No. Circuits		N°	2	2	2	2	2	2	2	2	2	3
Regulation			STEPLESS	STEPLESS	STEPLESS	STEPLESS	STEPLESS	STEPLESS	STEPLESS	STEPLESS	STEPLESS	STEPLESS
Min. capacity step		%	21	21	21	21	21	21	21	21	21	14
Refrigerant			R134a	R134a	R134a	R134a	R134a	R134a	R134a	R134a	R134a	R134a
Refrigerant charge		kg	144	153	158	164	172	185	189	205	210	232
Oil charge		kg	60,0	60,0	60,0	60,0	60,0	60,0	62,0	64,0	64,0	90,0
Rc (ASHRAE)	(4)	kg/kW	0,16	0,16	0,15	0,15	0,15	0,15	0,15	0,16	0,15	0,16
FANS												
Quantity		N°	11	12	12	12	14	14	14	16	16	18
Air flow		m³/s	58,48	63,80	63,80	63,80	74,43	74,43	74,43	85,07	85,07	95,70
Fans power input		kW	1,90	1,90	1,90	1,90	1,90	1,90	1,90	1,90	1,90	1,90
NOISE LEVEL												
Sound Pressure	(5)	dB(A)	70	70	71	71	71	71	72	73	73	73
Sound power level in cooling	(6)(7)	dB(A)	103	103	104	104	104	104	105	106	106	106
SIZE AND WEIGHT												
A	(8)	mm	7750	7750	7750	7750	9000	9000	9150	10400	10400	11650
B	(8)	mm	2260	2260	2260	2260	2260	2260	2260	2260	2260	2260
H	(8)	mm	2640	2640	2640	2640	2640	2640	2640	2640	2640	2640
Operating weight	(8)	kg	7460	7620	7870	7900	8430	8500	8860	9470	9610	12050

Notes:
1 Plant (side) cooling exchanger water (in/out) 12,00°C/7,00°C; Source (side) heat exchanger air (in) 35,0°C.
2 Values in compliance with EN14511
3 Plant (side) cooling exchanger water (in/out) 12,00°C/7,00°C; Source (side) heat exchanger air (in) 35,0°C; Plant (side) heat exchanger recovery water (in/out) 40,00°C/45,00°C.
4 Rated in accordance with AHRI Standard 550/590
5 Average sound pressure level at 10m distance, unit in a free field on a reflective surface; non-binding value calculated from the sound power level.
6 Sound power on the basis of measurements taken in compliance with ISO 9614.
7 Sound power level in cooling, outdoors.
8 Unit in standard configuration, without optional accessories.
- Not available

Data certified in EUROVENT

GENERAL TECHNICAL DATA FX2-G01 /K

[SI System]

FX2-G01 /K			1593	1663	1773	1883
Power supply		V/ph/Hz	400/3/50	400/3/50	400/3/50	400/3/50
PERFORMANCE						
COOLING ONLY (GROSS VALUE)						
Cooling capacity	(1)	**kW**	**1592**	**1664**	**1778**	**1839**
Total power input	(1)	kW	513,5	546,6	569,8	594,2
EER	(1)	kW/kW	3,100	3,044	3,120	3,095
ESEER	(1)	kW/kW	4,460	4,440	4,460	4,480
COOLING ONLY (EN14511 VALUE)						
Cooling capacity	(1)(2)	**kW**	**1591**	**1663**	**1777**	**1838**
EER	(1)(2)	kW/kW	3,060	3,010	3,090	3,060
ESEER	(1)(2)	kW/kW	4,280	4,290	4,290	4,290
COOLING WITH PARTIAL RECOVERY						
Cooling capacity	(3)	kW	1651	1726	1845	1908
Total power input	(3)	kW	496,7	528,7	551,2	574,7
Desuperheater heating capacity	(3)	**kW**	**427,9**	**457,4**	**474,7**	**496,5**
EXCHANGERS						
HEAT EXCHANGER USER SIDE IN REFRIGERATION						
Water flow	(1)	l/s	76,12	79,55	85,04	87,92
Pressure drop at the heat exchanger	(1)	kPa	58,6	45,1	51,6	59,1
PARTIAL RECOVERY USER SIDE IN REFRIGERATION						
Water flow	(3)	l/s	20,65	22,08	22,91	23,97
Pressure drop at the heat exchanger	(3)	kPa	32,6	31,0	33,3	28,3
REFRIGERANT CIRCUIT						
Compressors nr.		N°	3	3	3	3
Number of capacity steps		N°	0	0	0	0
No. Circuits		N°	3	3	3	3
Regulation			STEPLESS	STEPLESS	STEPLESS	STEPLESS
Min. capacity step		%	14	14	14	14
Refrigerant			R134a	R134a	R134a	R134a
Refrigerant charge		kg	239	248	267	280
Oil charge		kg	90,0	90,0	90,0	90,0
Rc (ASHRAE)	(4)	kg/kW	0,15	0,15	0,15	0,15
FANS						
Quantity		N°	18	18	20	20
Air flow		m³/s	95,70	95,70	106,33	106,33
Fans power input		kW	1,90	1,90	1,90	1,90
NOISE LEVEL						
Sound Pressure	(5)	dB(A)	73	73	73	73
Sound power level in cooling	(6)(7)	dB(A)	106	106	106	106
SIZE AND WEIGHT						
A	(8)	mm	11650	11650	12900	12900
B	(8)	mm	2260	2260	2260	2260
H	(8)	mm	2640	2640	2640	2640
Operating weight	(8)	kg	12110	12120	12710	12720

Notes:
1 Plant (side) cooling exchanger water (in/out) 12,00°C/7,00°C; Source (side) heat exchanger air (in) 35,0°C.
2 Values in compliance with EN14511
3 Plant (side) cooling exchanger water (in/out) 12,00°C/7,00°C; Source (side) heat exchanger air (in) 35,0°C; Plant (side) heat exchanger recovery water (in/out) 40,00°C/45,00°C.
4 Rated in accordance with AHRI Standard 550/590
5 Average sound pressure level at 10m distance, unit in a free field on a reflective surface; non-binding value calculated from the sound power level.
6 Sound power on the basis of measurements taken in compliance with ISO 9614.
7 Sound power level in cooling, outdoors.
8 Unit in standard configuration, without optional accessories.
- Not available
Data certified in EUROVENT

GENERAL TECHNICAL DATA FX2-G01 /SL-K

[SI System]

FX2-G01 /SL-K			0322	0352	0402	0472	0512	0572	0652	0702	0772	0852
Power supply		V/ph/Hz	400/3/50	400/3/50	400/3/50	400/3/50	400/3/50	400/3/50	400/3/50	400/3/50	400/3/50	400/3/50
PERFORMANCE												
COOLING ONLY (GROSS VALUE)												
Cooling capacity	(1)	**kW**	**310,2**	**358,4**	**410,2**	**450,1**	**511,7**	**557,4**	**621,9**	**713,0**	**770,4**	**828,6**
Total power input	(1)	kW	101,2	113,0	125,9	146,1	161,4	174,6	207,2	222,7	246,8	271,7
EER	(1)	kW/kW	3,065	3,172	3,258	3,081	3,170	3,192	3,001	3,202	3,122	3,050
ESEER	(1)	kW/kW	4,410	4,440	4,470	4,490	4,460	4,470	4,460	4,460	4,480	4,440
COOLING ONLY (EN14511 VALUE)												
Cooling capacity	(1)(2)	**kW**	**309,8**	**358,0**	**409,8**	**449,7**	**511,2**	**556,9**	**621,3**	**712,4**	**769,7**	**828,0**
EER	(1)(2)	kW/kW	3,040	3,140	3,220	3,040	3,140	3,150	2,970	3,160	3,080	3,020
ESEER	(1)(2)	kW/kW	4,280	4,290	4,310	4,310	4,310	4,310	4,300	4,300	4,290	4,290
COOLING WITH PARTIAL RECOVERY												
Cooling capacity	(3)	kW	321,8	371,8	425,6	467,0	530,9	578,4	645,2	739,7	799,3	859,7
Total power input	(3)	kW	97,85	109,3	121,8	141,3	156,1	168,9	200,4	215,4	238,7	262,7
Desuperheater heating capacity	(3)	**kW**	**85,33**	**94,60**	**104,9**	**122,9**	**135,3**	**145,9**	**175,0**	**186,3**	**207,8**	**230,0**
EXCHANGERS												
HEAT EXCHANGER USER SIDE IN REFRIGERATION												
Water flow	(1)	l/s	14,83	17,14	19,62	21,53	24,47	26,66	29,74	34,10	36,84	39,63
Pressure drop at the heat exchanger	(1)	kPa	25,7	34,3	38,5	46,4	36,6	43,5	43,2	45,2	52,8	43,5
PARTIAL RECOVERY USER SIDE IN REFRIGERATION												
Water flow	(3)	l/s	4,119	4,566	5,063	5,934	6,531	7,042	8,447	8,994	10,03	11,10
Pressure drop at the heat exchanger	(3)	kPa	32,3	39,7	48,8	33,3	40,4	46,9	33,3	37,7	35,2	33,6
REFRIGERANT CIRCUIT												
Compressors nr.		N°	2	2	2	2	2	2	2	2	2	2
Number of capacity steps		N°	0	0	0	0	0	0	0	0	0	0
No. Circuits		N°	2	2	2	2	2	2	2	2	2	2
Regulation			STEPLESS	STEPLESS	STEPLESS	STEPLESS	STEPLESS	STEPLESS	STEPLESS	STEPLESS	STEPLESS	STEPLESS
Min. capacity step		%	21	21	21	21	21	21	21	21	21	21
Refrigerant			R134a	R134a	R134a	R134a	R134a	R134a	R134a	R134a	R134a	R134a
Refrigerant charge		kg	50,0	59,0	67,0	72,0	83,0	91,0	100	116	124	132
Oil charge		kg	30,0	30,0	30,0	30,0	34,0	38,0	38,0	38,0	49,0	60,0
Rc (ASHRAE)	(4)	kg/kW	0,16	0,17	0,17	0,16	0,16	0,16	0,16	0,16	0,16	0,16
FANS												
Quantity		N°	4	5	6	6	7	8	8	10	10	10
Air flow		m³/s	19,21	24,01	28,81	28,81	33,61	38,41	38,41	48,02	48,02	48,02
Fans power input		kW	1,40	1,40	1,40	1,40	1,40	1,40	1,40	1,40	1,40	1,40
NOISE LEVEL												
Sound Pressure	(5)	dB(A)	55	55	56	56	57	57	57	57	58	58
Sound power level in cooling	(6)(7)	dB(A)	87	87	88	88	89	89	89	90	91	91
SIZE AND WEIGHT												
A	(8)	mm	2750	4000	4000	4000	5250	5250	5250	6500	6500	6500
B	(8)	mm	2260	2260	2260	2260	2260	2260	2260	2260	2260	2260
H	(8)	mm	2640	2640	2640	2640	2640	2640	2640	2640	2640	2640
Operating weight	(8)	kg	3380	3830	3960	4000	5270	5680	5720	6600	7090	7590

Notes:
1 Plant (side) cooling exchanger water (in/out) 12,00°C/7,00°C; Source (side) heat exchanger air (in) 35,0°C.
2 Values in compliance with EN14511
3 Plant (side) cooling exchanger water (in/out) 12,00°C/7,00°C; Source (side) heat exchanger air (in) 35,0°C; Plant (side) heat exchanger recovery water (in/out) 40,00°C/45,00°C.
4 Rated in accordance with AHRI Standard 550/590
5 Average sound pressure level at 10m distance, unit in a free field on a reflective surface; non-binding value calculated from the sound power level.
6 Sound power on the basis of measurements taken in compliance with ISO 9614.
7 Sound power level in cooling, outdoors.
8 Unit in standard configuration, without optional accessories.
- Not available
Data certified in EUROVENT

GENERAL TECHNICAL DATA FX2-G01 /SL-K

[SI System]

FX2-G01 /SL-K			0902	1002	1052	1102	1152	1222	1262	1322	1402	1503
Power supply		V/ph/Hz	400/3/50	400/3/50	400/3/50	400/3/50	400/3/50	400/3/50	400/3/50	400/3/50	400/3/50	400/3/50
PERFORMANCE												
COOLING ONLY (GROSS VALUE)												
Cooling capacity	(1)	**kW**	**901,6**	**959,9**	**1037**	**1098**	**1131**	**1222**	**1257**	**1284**	**1386**	**1451**
Total power input	(1)	kW	294,5	315,0	335,4	353,2	341,0	380,8	407,3	432,8	459,1	474,3
EER	(1)	kW/kW	3,061	3,047	3,092	3,109	3,317	3,209	3,086	2,967	3,019	3,059
ESEER	(1)	kW/kW	4,470	4,480	4,460	4,470	4,480	4,480	4,450	4,470	4,490	4,460
COOLING ONLY (EN14511 VALUE)												
Cooling capacity	(1)(2)	**kW**	**901,0**	**959,1**	**1037**	**1097**	**1130**	**1222**	**1256**	**1283**	**1385**	**1451**
EER	(1)(2)	kW/kW	3,030	3,010	3,060	3,070	3,270	3,170	3,050	2,930	2,980	3,030
ESEER	(1)(2)	kW/kW	4,300	4,300	4,300	4,290	4,300	4,290	4,300	4,300	4,300	4,300
COOLING WITH PARTIAL RECOVERY												
Cooling capacity	(3)	kW	935,4	995,9	1076	1139	1173	1268	1304	1332	1438	1506
Total power input	(3)	kW	284,7	304,6	324,3	341,5	329,9	368,3	393,8	418,4	443,9	458,6
Desuperheater heating capacity	(3)	**kW**	**249,1**	**266,2**	**283,1**	**297,8**	**284,4**	**319,9**	**343,5**	**366,3**	**387,3**	**400,9**
EXCHANGERS												
HEAT EXCHANGER USER SIDE IN REFRIGERATION												
Water flow	(1)	l/s	43,12	45,90	49,60	52,51	54,08	58,46	60,10	61,40	66,26	69,40
Pressure drop at the heat exchanger	(1)	kPa	45,5	51,6	46,6	52,2	55,3	60,7	48,2	50,3	58,6	48,7
PARTIAL RECOVERY USER SIDE IN REFRIGERATION												
Water flow	(3)	l/s	12,03	12,85	13,67	14,37	13,73	15,44	16,58	17,68	18,70	19,35
Pressure drop at the heat exchanger	(3)	kPa	39,4	44,9	35,8	29,5	26,9	34,0	30,3	34,4	38,5	45,1
REFRIGERANT CIRCUIT												
Compressors nr.		N°	2	2	2	2	2	2	2	2	2	3
Number of capacity steps		N°	0	0	0	0	0	0	0	0	0	0
No. Circuits		N°	2	2	2	2	2	2	2	2	2	3
Regulation			STEPLESS	STEPLESS	STEPLESS	STEPLESS	STEPLESS	STEPLESS	STEPLESS	STEPLESS	STEPLESS	STEPLESS
Min. capacity step		%	21	21	21	21	21	21	21	21	21	14
Refrigerant			R134a	R134a	R134a	R134a	R134a	R134a	R134a	R134a	R134a	R134a
Refrigerant charge		kg	144	153	166	176	183	196	201	205	222	232
Oil charge		kg	60,0	60,0	60,0	60,0	60,0	60,0	62,0	64,0	64,0	90,0
Rc (ASHRAE)	(4)	kg/kW	0,16	0,16	0,16	0,16	0,16	0,16	0,16	0,16	0,16	0,16
FANS												
Quantity		N°	11	12	13	14	16	16	16	16	18	18
Air flow		m³/s	52,82	57,62	62,42	67,22	76,83	76,83	76,83	76,83	86,43	86,43
Fans power input		kW	1,40	1,40	1,40	1,40	1,40	1,40	1,40	1,40	1,40	1,40
NOISE LEVEL												
Sound Pressure	(5)	dB(A)	59	59	60	60	61	61	61	61	61	61
Sound power level in cooling	(6)(7)	dB(A)	92	92	93	93	94	94	94	94	94	94
SIZE AND WEIGHT												
A	(8)	mm	7750	7750	9000	9000	10250	10250	10400	10400	11650	11650
B	(8)	mm	2260	2260	2260	2260	2260	2260	2260	2260	2260	2260
H	(8)	mm	2640	2640	2640	2640	2640	2640	2640	2640	2640	2640
Operating weight	(8)	kg	8100	8270	8920	9060	9640	9710	10060	10150	10720	12980

Notes:
1 Plant (side) cooling exchanger water (in/out) 12,00°C/7,00°C; Source (side) heat exchanger air (in) 35,0°C.
2 Values in compliance with EN14511
3 Plant (side) cooling exchanger water (in/out) 12,00°C/7,00°C; Source (side) heat exchanger air (in) 35,0°C; Plant (side) heat exchanger recovery water (in/out) 40,00°C/45,00°C.
4 Rated in accordance with AHRI Standard 550/590
5 Average sound pressure level at 10m distance, unit in a free field on a reflective surface; non-binding value calculated from the sound power level.
6 Sound power on the basis of measurements taken in compliance with ISO 9614.
7 Sound power level in cooling, outdoors.
8 Unit in standard configuration, without optional accessories.
- Not available
Data certified in EUROVENT

GENERAL TECHNICAL DATA FX2-G01 /SL-K

[SI System]

FX2-G01 /SL-K			1593	1663	1773	1883
Power supply		V/ph/Hz	400/3/50	400/3/50	400/3/50	400/3/50
PERFORMANCE						
COOLING ONLY (GROSS VALUE)						
Cooling capacity	(1)	**kW**	**1573**	**1645**	**1714**	**1773**
Total power input	(1)	kW	509,9	540,4	582,7	609,3
EER	(1)	kW/kW	3,085	3,044	2,941	2,910
ESEER	(1)	kW/kW	4,480	4,440	4,450	4,460
COOLING ONLY (EN14511 VALUE)						
Cooling capacity	(1)(2)	**kW**	**1572**	**1644**	**1714**	**1772**
EER	(1)(2)	kW/kW	3,050	3,010	2,910	2,880
ESEER	(1)(2)	kW/kW	4,290	4,300	4,290	4,280
COOLING WITH PARTIAL RECOVERY						
Cooling capacity	(3)	kW	1632	1706	1779	1839
Total power input	(3)	kW	493,0	522,4	563,3	589,0
Desuperheater heating capacity	(3)	**kW**	**430,1**	**457,3**	**495,1**	**518,9**
EXCHANGERS						
HEAT EXCHANGER USER SIDE IN REFRIGERATION						
Water flow	(1)	l/s	75,22	78,65	81,99	84,78
Pressure drop at the heat exchanger	(1)	kPa	57,2	44,1	47,9	55,0
PARTIAL RECOVERY USER SIDE IN REFRIGERATION						
Water flow	(3)	l/s	20,76	22,08	23,90	25,05
Pressure drop at the heat exchanger	(3)	kPa	33,0	30,9	36,3	30,9
REFRIGERANT CIRCUIT						
Compressors nr.		N°	3	3	3	3
Number of capacity steps		N°	0	0	0	0
No. Circuits		N°	3	3	3	3
Regulation			STEPLESS	STEPLESS	STEPLESS	STEPLESS
Min. capacity step		%	14	14	14	14
Refrigerant			R134a	R134a	R134a	R134a
Refrigerant charge		kg	252	262	272	280
Oil charge		kg	90,0	90,0	90,0	90,0
Rc (ASHRAE)	(4)	kg/kW	0,16	0,16	0,16	0,16
FANS						
Quantity		N°	20	20	20	20
Air flow		m³/s	96,03	96,03	96,03	96,03
Fans power input		kW	1,40	1,40	1,40	1,40
NOISE LEVEL						
Sound Pressure	(5)	dB(A)	61	61	61	62
Sound power level in cooling	(6)(7)	dB(A)	94	94	94	95
SIZE AND WEIGHT						
A	(8)	mm	12900	12900	12900	12900
B	(8)	mm	2260	2260	2260	2260
H	(8)	mm	2640	2640	2640	2500
Operating weight	(8)	kg	13560	13560	13650	13670

Notes:
1 Plant (side) cooling exchanger water (in/out) 12,00°C/7,00°C; Source (side) heat exchanger air (in) 35,0°C.
2 Values in compliance with EN14511
3 Plant (side) cooling exchanger water (in/out) 12,00°C/7,00°C; Source (side) heat exchanger air (in) 35,0°C; Plant (side) heat exchanger recovery water (in/out) 40,00°C/45,00°C.
4 Rated in accordance with AHRI Standard 550/590
5 Average sound pressure level at 10m distance, unit in a free field on a reflective surface; non-binding value calculated from the sound power level.
6 Sound power on the basis of measurements taken in compliance with ISO 9614.
7 Sound power level in cooling, outdoors.
8 Unit in standard configuration, without optional accessories.
- Not available
Data certified in EUROVENT

GENERAL TECHNICAL DATA FX2-G01 /E

[SI System]

FX2-G01 /E			0352	0402	0452	0472	0572	0602	0652	0702	0772	0852
Power supply		V/ph/Hz	400/3/50	400/3/50	400/3/50	400/3/50	400/3/50	400/3/50	400/3/50	400/3/50	400/3/50	400/3/50
PERFORMANCE												
COOLING ONLY (GROSS VALUE)												
Cooling capacity	(1)	**kW**	**340,3**	**389,8**	**444,9**	**485,0**	**570,3**	**619,0**	**658,9**	**698,5**	**756,1**	**844,7**
Total power input	(1)	kW	97,07	111,2	126,4	140,5	160,5	175,2	186,1	197,1	219,0	242,4
EER	(1)	kW/kW	3,505	3,505	3,520	3,452	3,553	3,533	3,541	3,544	3,453	3,485
ESEER	(1)	kW/kW	4,610	4,630	4,630	4,640	4,620	4,620	4,630	4,650	4,630	4,620
COOLING ONLY (EN14511 VALUE)												
Cooling capacity	(1)(2)	**kW**	**339,9**	**389,4**	**444,5**	**484,6**	**569,8**	**618,5**	**658,4**	**697,9**	**755,5**	**844,1**
EER	(1)(2)	kW/kW	3,470	3,470	3,490	3,420	3,510	3,500	3,500	3,500	3,420	3,450
ESEER	(1)(2)	kW/kW	4,490	4,480	4,500	4,490	4,440	4,480	4,470	4,480	4,480	4,460
COOLING WITH PARTIAL RECOVERY												
Cooling capacity	(3)	kW	353,0	404,4	461,5	503,2	591,7	642,2	683,6	724,7	784,4	876,4
Total power input	(3)	kW	94,07	107,9	122,5	136,1	155,6	169,8	180,4	191,0	212,1	234,8
Desuperheater heating capacity	(3)	**kW**	**76,47**	**85,71**	**99,23**	**111,8**	**126,3**	**139,5**	**147,5**	**155,6**	**175,1**	**194,4**
EXCHANGERS												
HEAT EXCHANGER USER SIDE IN REFRIGERATION												
Water flow	(1)	l/s	16,27	18,64	21,27	23,20	27,27	29,60	31,51	33,40	36,16	40,40
Pressure drop at the heat exchanger	(1)	kPa	26,5	34,8	27,7	32,9	41,4	34,1	38,6	43,4	36,3	40,0
PARTIAL RECOVERY USER SIDE IN REFRIGERATION												
Water flow	(3)	l/s	3,691	4,137	4,790	5,397	6,099	6,732	7,120	7,509	8,453	9,382
Pressure drop at the heat exchanger	(3)	kPa	26,0	32,6	43,7	27,6	35,2	42,9	32,9	26,3	33,3	30,8
REFRIGERANT CIRCUIT												
Compressors nr.		N°	2	2	2	2	2	2	2	2	2	2
Number of capacity steps		N°	0	0	0	0	0	0	0	0	0	0
No. Circuits		N°	2	2	2	2	2	2	2	2	2	2
Regulation			STEPLESS	STEPLESS	STEPLESS	STEPLESS	STEPLESS	STEPLESS	STEPLESS	STEPLESS	STEPLESS	STEPLESS
Min. capacity step		%	21	21	21	21	21	21	21	21	21	21
Refrigerant			R134a	R134a	R134a	R134a	R134a	R134a	R134a	R134a	R134a	R134a
Refrigerant charge		kg	58,0	68,0	76,0	83,0	97,0	104	112	119	127	142
Oil charge		kg	30,0	30,0	30,0	30,0	44,0	38,0	38,0	38,0	38,0	49,0
Rc (ASHRAE)	(4)	kg/kW	0,17	0,18	0,17	0,17	0,17	0,17	0,17	0,17	0,17	0,17
FANS												
Quantity		N°	6	8	8	8	10	10	11	12	12	13
Air flow		m³/s	31,90	42,53	42,53	42,53	53,17	53,17	58,48	63,80	63,80	69,12
Fans power input		kW	1,90	1,90	1,90	1,90	1,90	1,90	1,90	1,90	1,90	1,90
NOISE LEVEL												
Sound Pressure	(5)	dB(A)	66	67	67	67	67	67	68	68	68	68
Sound power level in cooling	(6)(7)	dB(A)	98	99	99	99	100	100	101	101	101	101
SIZE AND WEIGHT												
A	(8)	mm	4000	5250	5250	5250	6500	6500	7750	7750	7750	9000
B	(8)	mm	2260	2260	2260	2260	2260	2260	2260	2260	2260	2260
H	(8)	mm	2640	2640	2640	2640	2640	2640	2640	2640	2640	2640
Operating weight	(8)	kg	3660	4270	4390	4440	5660	5960	6420	6550	6640	7530

Notes:
1 Plant (side) cooling exchanger water (in/out) 12,00°C/7,00°C; Source (side) heat exchanger air (in) 35,0°C.
2 Values in compliance with EN14511
3 Plant (side) cooling exchanger water (in/out) 12,00°C/7,00°C; Source (side) heat exchanger air (in) 35,0°C; Plant (side) heat exchanger recovery water (in/out) 40,00°C/45,00°C.
4 Rated in accordance with AHRI Standard 550/590
5 Average sound pressure level at 10m distance, unit in a free field on a reflective surface; non-binding value calculated from the sound power level.
6 Sound power on the basis of measurements taken in compliance with ISO 9614.
7 Sound power level in cooling, outdoors.
8 Unit in standard configuration, without optional accessories.
- Not available
Data certified in EUROVENT

GENERAL TECHNICAL DATA FX2-G01 /E

[SI System]

FX2-G01 /E			0902	1002	1052	1152	1222	1322	1402
Power supply		V/ph/Hz	400/3/50	400/3/50	400/3/50	400/3/50	400/3/50	400/3/50	400/3/50
PERFORMANCE									
COOLING ONLY (GROSS VALUE)									
Cooling capacity	(1)	**kW**	**918,1**	**1001**	**1061**	**1133**	**1207**	**1311**	**1372**
Total power input	(1)	kW	262,9	284,6	305,5	325,8	346,3	383,3	402,1
EER	(1)	kW/kW	3,492	3,517	3,473	3,478	3,485	3,420	3,412
ESEER	(1)	kW/kW	4,640	4,690	4,640	4,660	4,660	4,600	4,620
COOLING ONLY (EN14511 VALUE)									
Cooling capacity	(1)(2)	**kW**	**917,4**	**1000**	**1060**	**1132**	**1206**	**1310**	**1371**
EER	(1)(2)	kW/kW	3,450	3,460	3,430	3,430	3,440	3,390	3,380
ESEER	(1)(2)	kW/kW	4,460	4,470	4,460	4,480	4,460	4,450	4,460
COOLING WITH PARTIAL RECOVERY									
Cooling capacity	(3)	kW	952,5	1039	1100	1175	1252	1360	1424
Total power input	(3)	kW	254,7	275,6	295,9	315,5	335,4	371,1	389,4
Desuperheater heating capacity	(3)	**kW**	**211,0**	**228,6**	**245,6**	**262,0**	**278,6**	**311,6**	**325,0**
EXCHANGERS									
HEAT EXCHANGER USER SIDE IN REFRIGERATION									
Water flow	(1)	l/s	43,90	47,88	50,72	54,17	57,73	62,68	65,62
Pressure drop at the heat exchanger	(1)	kPa	47,2	61,2	48,7	53,2	59,2	39,7	43,5
PARTIAL RECOVERY USER SIDE IN REFRIGERATION									
Water flow	(3)	l/s	10,18	11,03	11,85	12,65	13,45	15,04	15,69
Pressure drop at the heat exchanger	(3)	kPa	28,2	33,1	38,2	31,1	25,8	32,3	28,7
REFRIGERANT CIRCUIT									
Compressors nr.		N°	2	2	2	2	2	2	2
Number of capacity steps		N°	0	0	0	0	0	0	0
No. Circuits		N°	2	2	2	2	2	2	2
Regulation			STEPLESS	STEPLESS	STEPLESS	STEPLESS	STEPLESS	STEPLESS	STEPLESS
Min. capacity step		%	21	21	21	21	21	21	21
Refrigerant			R134a	R134a	R134a	R134a	R134a	R134a	R134a
Refrigerant charge		kg	153	167	177	189	201	216	228
Oil charge		kg	60,0	60,0	60,0	60,0	60,0	60,0	62,0
Rc (ASHRAE)	(4)	kg/kW	0,17	0,17	0,17	0,17	0,17	0,17	0,17
FANS									
Quantity		N°	14	15	16	17	18	18	20
Air flow		m³/s	74,43	79,75	85,07	90,38	95,70	95,70	106,33
Fans power input		kW	1,90	1,90	1,90	1,90	1,90	1,90	1,90
NOISE LEVEL									
Sound Pressure	(5)	dB(A)	69	69	70	70	70	70	71
Sound power level in cooling	(6)(7)	dB(A)	102	102	103	103	103	103	104
SIZE AND WEIGHT									
A	(8)	mm	9000	10250	10250	11650	11650	11650	12900
B	(8)	mm	2260	2260	2260	2260	2260	2260	2260
H	(8)	mm	2640	2640	2640	2640	2640	2640	2640
Operating weight	(8)	kg	8060	8570	8920	9430	9550	10490	11150

Notes:
1 Plant (side) cooling exchanger water (in/out) 12,00°C/7,00°C; Source (side) heat exchanger air (in) 35,0°C.
2 Values in compliance with EN14511
3 Plant (side) cooling exchanger water (in/out) 12,00°C/7,00°C; Source (side) heat exchanger air (in) 35,0°C; Plant (side) heat exchanger recovery water (in/out) 40,00°C/45,00°C.
4 Rated in accordance with AHRI Standard 550/590
5 Average sound pressure level at 10m distance, unit in a free field on a reflective surface; non-binding value calculated from the sound power level.
6 Sound power on the basis of measurements taken in compliance with ISO 9614.
7 Sound power level in cooling, outdoors.
8 Unit in standard configuration, without optional accessories.
- Not available
Data certified in EUROVENT

GENERAL TECHNICAL DATA FX2-G01 /SL-E

[SI System]

FX2-G01 /SL-E			0352	0402	0452	0472	0572	0602	0652	0702	0772	0852
Power supply		V/ph/Hz	400/3/50	400/3/50	400/3/50	400/3/50	400/3/50	400/3/50	400/3/50	400/3/50	400/3/50	400/3/50
PERFORMANCE												
COOLING ONLY (GROSS VALUE)												
Cooling capacity	(1)	**kW**	**336,3**	**386,0**	**439,6**	**480,9**	**563,4**	**610,9**	**650,6**	**690,1**	**748,9**	**834,3**
Total power input	(1)	kW	95,76	108,8	124,5	139,6	158,4	173,7	184,2	194,7	218,0	240,9
EER	(1)	kW/kW	3,510	3,548	3,531	3,445	3,557	3,517	3,532	3,544	3,435	3,463
ESEER	(1)	kW/kW	4,640	4,660	4,640	4,640	4,630	4,650	4,650	4,680	4,660	4,630
COOLING ONLY (EN14511 VALUE)												
Cooling capacity	(1)(2)	**kW**	**335,9**	**385,6**	**439,3**	**480,5**	**562,9**	**610,4**	**650,1**	**689,5**	**748,3**	**833,7**
EER	(1)(2)	kW/kW	3,480	3,510	3,500	3,410	3,510	3,480	3,490	3,500	3,400	3,430
ESEER	(1)(2)	kW/kW	4,510	4,510	4,520	4,500	4,470	4,510	4,500	4,510	4,510	4,480
COOLING WITH PARTIAL RECOVERY												
Cooling capacity	(3)	kW	348,9	400,5	456,1	498,9	584,5	633,8	675,0	716,0	777,0	865,6
Total power input	(3)	kW	92,70	105,4	120,5	135,1	153,4	168,1	178,3	188,5	211,0	233,1
Desuperheater heating capacity	(3)	**kW**	**77,98**	**87,16**	**101,1**	**114,6**	**128,9**	**142,5**	**150,6**	**158,8**	**179,6**	**198,8**
EXCHANGERS												
HEAT EXCHANGER USER SIDE IN REFRIGERATION												
Water flow	(1)	l/s	16,08	18,46	21,02	23,00	26,94	29,21	31,11	33,00	35,81	39,90
Pressure drop at the heat exchanger	(1)	kPa	25,9	34,1	27,0	32,3	40,4	33,2	37,6	42,3	35,6	39,0
PARTIAL RECOVERY USER SIDE IN REFRIGERATION												
Water flow	(3)	l/s	3,764	4,207	4,882	5,532	6,223	6,880	7,272	7,665	8,669	9,597
Pressure drop at the heat exchanger	(3)	kPa	27,0	33,7	45,4	28,9	36,6	44,8	34,3	27,4	35,1	32,2
REFRIGERANT CIRCUIT												
Compressors nr.		N°	2	2	2	2	2	2	2	2	2	2
Number of capacity steps		N°	0	0	0	0	0	0	0	0	0	0
No. Circuits		N°	2	2	2	2	2	2	2	2	2	2
Regulation			STEPLESS	STEPLESS	STEPLESS	STEPLESS	STEPLESS	STEPLESS	STEPLESS	STEPLESS	STEPLESS	STEPLESS
Min. capacity step		%	21	21	21	21	21	21	21	21	21	21
Refrigerant			R134a	R134a	R134a	R134a	R134a	R134a	R134a	R134a	R134a	R134a
Refrigerant charge		kg	58,0	68,0	76,0	83,0	97,0	104	112	119	127	142
Oil charge		kg	30,0	30,0	30,0	30,0	44,0	38,0	38,0	38,0	38,0	49,0
Rc (ASHRAE)	(4)	kg/kW	0,17	0,18	0,17	0,17	0,17	0,17	0,17	0,17	0,17	0,17
FANS												
Quantity		N°	6	8	8	8	10	10	11	12	12	13
Air flow		m³/s	28,81	38,41	38,41	38,41	48,02	48,02	52,82	57,62	57,62	62,42
Fans power input		kW	1,40	1,40	1,40	1,40	1,40	1,40	1,40	1,40	1,40	1,40
NOISE LEVEL												
Sound Pressure	(5)	dB(A)	56	57	57	57	57	58	58	59	59	59
Sound power level in cooling	(6)(7)	dB(A)	88	89	89	89	90	91	91	92	92	92
SIZE AND WEIGHT												
A	(8)	mm	4000	5250	5250	5250	6500	6500	7750	7750	7750	9000
B	(8)	mm	2260	2260	2260	2260	2260	2260	2260	2260	2260	2260
H	(8)	mm	2640	2640	2640	2640	2640	2640	2640	2640	2640	2640
Operating weight	(8)	kg	3930	4540	4660	4720	6200	6500	6960	7100	7190	8120

Notes:
1 Plant (side) cooling exchanger water (in/out) 12,00°C/7,00°C; Source (side) heat exchanger air (in) 35,0°C.
2 Values in compliance with EN14511
3 Plant (side) cooling exchanger water (in/out) 12,00°C/7,00°C; Source (side) heat exchanger air (in) 35,0°C; Plant (side) heat exchanger recovery water (in/out) 40,00°C/45,00°C.
4 Rated in accordance with AHRI Standard 550/590
5 Average sound pressure level at 10m distance, unit in a free field on a reflective surface; non-binding value calculated from the sound power level.
6 Sound power on the basis of measurements taken in compliance with ISO 9614.
7 Sound power level in cooling, outdoors.
8 Unit in standard configuration, without optional accessories.
- Not available
Data certified in EUROVENT

GENERAL TECHNICAL DATA FX2-G01 /SL-E

[SI System]

FX2-G01 /SL-E			0902	1002	1052	1152	1222	1322	1402
Power supply		V/ph/Hz	400/3/50	400/3/50	400/3/50	400/3/50	400/3/50	400/3/50	400/3/50
PERFORMANCE									
COOLING ONLY (GROSS VALUE)									
Cooling capacity	(1)	**kW**	**905,0**	**987,3**	**1046**	**1118**	**1191**	**1295**	**1355**
Total power input	(1)	kW	260,8	282,6	303,8	324,0	344,5	383,8	400,7
EER	(1)	kW/kW	3,470	3,494	3,443	3,451	3,457	3,374	3,382
ESEER	(1)	kW/kW	4,640	4,690	4,650	4,680	4,670	4,610	4,630
COOLING ONLY (EN14511 VALUE)									
Cooling capacity	(1)(2)	**kW**	**904,3**	**986,6**	**1046**	**1117**	**1190**	**1294**	**1354**
EER	(1)(2)	kW/kW	3,430	3,440	3,400	3,400	3,410	3,340	3,350
ESEER	(1)(2)	kW/kW	4,470	4,480	4,480	4,490	4,470	4,470	4,480
COOLING WITH PARTIAL RECOVERY									
Cooling capacity	(3)	kW	938,9	1024	1086	1160	1236	1344	1406
Total power input	(3)	kW	252,4	273,5	293,9	313,5	333,3	371,2	387,7
Desuperheater heating capacity	(3)	**kW**	**215,3**	**233,5**	**251,2**	**268,0**	**285,0**	**320,1**	**332,7**
EXCHANGERS									
HEAT EXCHANGER USER SIDE IN REFRIGERATION									
Water flow	(1)	l/s	43,28	47,22	50,04	53,45	56,95	61,94	64,80
Pressure drop at the heat exchanger	(1)	kPa	45,9	59,5	47,4	51,8	57,6	38,8	42,4
PARTIAL RECOVERY USER SIDE IN REFRIGERATION									
Water flow	(3)	l/s	10,39	11,27	12,12	12,93	13,76	15,45	16,06
Pressure drop at the heat exchanger	(3)	kPa	29,4	34,6	40,0	32,5	27,0	34,0	30,1
REFRIGERANT CIRCUIT									
Compressors nr.		N°	2	2	2	2	2	2	2
Number of capacity steps		N°	0	0	0	0	0	0	0
No. Circuits		N°	2	2	2	2	2	2	2
Regulation			STEPLESS	STEPLESS	STEPLESS	STEPLESS	STEPLESS	STEPLESS	STEPLESS
Min. capacity step		%	21	21	21	21	21	21	21
Refrigerant			R134a	R134a	R134a	R134a	R134a	R134a	R134a
Refrigerant charge		kg	153	167	177	189	201	216	228
Oil charge		kg	60,0	60,0	60,0	60,0	60,0	60,0	62,0
Rc (ASHRAE)	(4)	kg/kW	0,17	0,17	0,17	0,17	0,17	0,17	0,17
FANS									
Quantity		N°	14	15	16	17	18	18	20
Air flow		m³/s	67,22	72,02	76,83	81,63	86,43	86,43	96,03
Fans power input		kW	1,40	1,40	1,40	1,40	1,40	1,40	1,40
NOISE LEVEL									
Sound Pressure	(5)	dB(A)	59	59	60	60	60	60	62
Sound power level in cooling	(6)(7)	dB(A)	92	92	93	93	93	93	95
SIZE AND WEIGHT									
A	(8)	mm	9000	10250	10250	11650	11650	11650	12900
B	(8)	mm	2260	2260	2260	2260	2260	2260	2260
H	(8)	mm	2640	2640	2640	2640	2640	2640	2640
Operating weight	(8)	kg	8690	9210	9560	10080	10200	11140	11810

Notes:
1 Plant (side) cooling exchanger water (in/out) 12,00°C/7,00°C; Source (side) heat exchanger air (in) 35,0°C.
2 Values in compliance with EN14511
3 Plant (side) cooling exchanger water (in/out) 12,00°C/7,00°C; Source (side) heat exchanger air (in) 35,0°C; Plant (side) heat exchanger recovery water (in/out) 40,00°C/45,00°C.
4 Rated in accordance with AHRI Standard 550/590
5 Average sound pressure level at 10m distance, unit in a free field on a reflective surface; non-binding value calculated from the sound power level.
6 Sound power on the basis of measurements taken in compliance with ISO 9614.
7 Sound power level in cooling, outdoors.
8 Unit in standard configuration, without optional accessories.
- Not available
Data certified in EUROVENT

6.1 TECHNICAL DATA SEASONAL EFFICIENCY IN COOLING (EN14825 VALUE)

[SI System]

ENERGY EFFICIENCY

SEASONAL EFFICIENCY IN COOLING (Reg. EU 2016/2281)
Ambient refrigeration

FX2-G01 /K			0322	0352	0402	0472	0512	0572	0652	0702	0772	0852
Prated,c	(1)	kW	321,8	349,8	411,5	463,9	516,2	572,9	645,2	707,0	779,1	862,3
SEER	(1) (2)	-	4,52	4,51	4,56	4,60	4,56	4,57	4,60	4,59	4,59	4,60
Performance ηs	(1) (3)	%	178,0	178,0	179,0	181,0	179,0	180,0	181,0	181,0	181,0	181,0
FX2-G01 /K			0902	1002	1052	1102	1152	1222	1262	1322	1402	1503
Prated,c	(1)	kW	936,6	995,2	1055,0	1097,0	1138,0	1231,0	1264,0	1331,0	1399,0	1505,0
SEER	(1) (2)	-	4,59	4,60	4,57	4,56	4,60	4,61	4,57	4,57	4,59	4,60
Performance ηs	(1) (3)	%	181,0	181,0	180,0	179,0	181,0	182,0	180,0	180,0	180,0	181,0
FX2-G01 /K			1593	1663	1773	1883						
Prated,c	(1)	kW	1591,0	1663,0	1777,0	1838,0						
SEER	(1) (2)	-	4,60	4,58	4,61	4,64						
Performance ηs	(1) (3)	%	181,0	180,0	182,0	182,0						

FX2-G01 /SL-K			0322	0352	0402	0472	0512	0572	0652	0702	0772	0852
Prated,c	(1)	kW	309,8	358,0	409,8	449,7	511,2	556,9	621,3	712,4	769,7	828,0
SEER	(1) (2)	-	4,47	4,52	4,56	4,55	4,57	4,55	4,55	4,58	4,60	4,58
Performance ηs	(1) (3)	%	176,0	178,0	179,0	179,0	180,0	179,0	179,0	180,0	181,0	180,0
FX2-G01 /SL-K			0902	1002	1052	1102	1152	1222	1262	1322	1402	1503
Prated,c	(1)	kW	901,0	959,1	1037,0	1097,0	1130,0	1222,0	1256,0	1283,0	1385,0	1451,0
SEER	(1) (2)	-	4,59	4,59	4,57	4,59	4,63	4,63	4,58	4,55	4,59	4,60
Performance ηs	(1) (3)	%	181,0	181,0	180,0	181,0	182,0	182,0	180,0	179,0	181,0	181,0
FX2-G01 /SL-K			1593	1663	1773	1883						
Prated,c	(1)	kW	1572,0	1644,0	1714,0	1772,0						
SEER	(1) (2)	-	4,63	4,60	4,59	4,59						
Performance ηs	(1) (3)	%	182,0	181,0	180,0	180,0						

FX2-G01 /E			0352	0402	0452	0472	0572	0602	0652	0702	0772	0852
Prated,c	(1)	kW	339,9	389,4	444,5	484,6	569,8	618,5	658,4	697,9	755,5	844,1
SEER	(1) (2)	-	4,64	4,66	4,70	4,68	4,73	4,66	4,68	4,75	4,72	4,73
Performance ηs	(1) (3)	%	183,0	183,0	185,0	184,0	186,0	183,0	184,0	187,0	186,0	186,0
FX2-G01 /E			0902	1002	1052	1152	1222	1322	1402			
Prated,c	(1)	kW	917,4	1000,0	1060,0	1132,0	1206,0	1310,0	1371,0			
SEER	(1) (2)	-	4,76	4,81	4,74	4,76	4,76	4,67	4,71			
Performance ηs	(1) (3)	%	187,0	189,0	187,0	187,0	188,0	184,0	185,0			

FX2-G01 /SL-E			0352	0402	0452	0472	0572	0602	0652	0702	0772	0852
Prated,c	(1)	kW	335,9	385,6	439,3	480,5	562,9	610,4	650,1	689,5	748,3	833,7
SEER	(1) (2)	-	4,67	4,68	4,69	4,67	4,74	4,67	4,68	4,77	4,74	4,73
Performance ηs	(1) (3)	%	184,0	184,0	185,0	184,0	187,0	184,0	184,0	188,0	186,0	186,0
FX2-G01 /SL-E			0902	1002	1052	1152	1222	1322	1402			
Prated,c	(1)	kW	904,3	986,6	1046,0	1117,0	1190,0	1294,0	1354,0			
SEER	(1) (2)	-	4,75	4,81	4,74	4,76	4,76	4,67	4,71			
Performance ηs	(1) (3)	%	187,0	189,0	187,0	187,0	188,0	184,0	185,0			

Notes:
(1) Parameter calculated according to [REGULATION (EU) N. 2016/2281]
(2) Seasonal energy efficiency ratio
(3) Seasonal space cooling energy efficiency
The units highlighted in this publication contain R134a [GWP_{100} 1430] fluorinated greenhouse gases.
Data certified in EUROVENT

/K 0322 - 1883
/SL-K 0322 - 1883

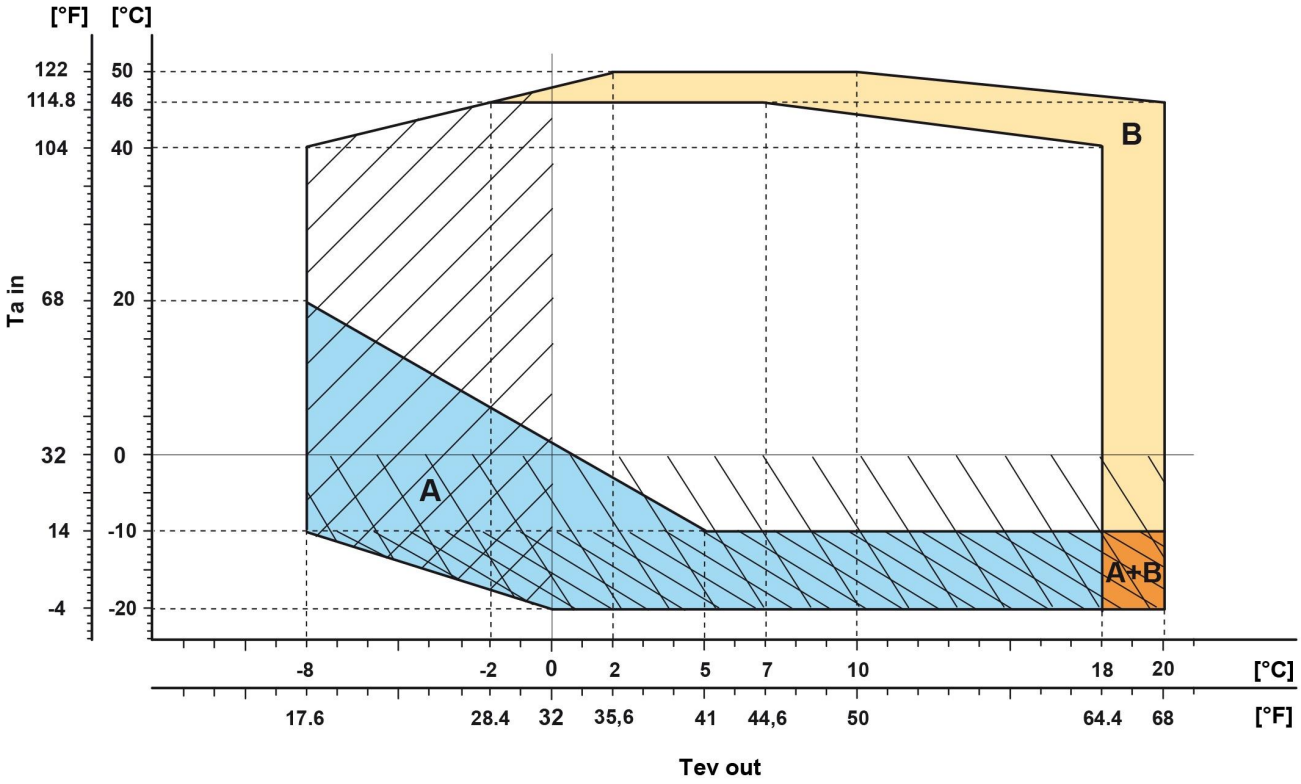

Ta in Air temperature

Tev out Evaporator leaving water temperature

Standard units

A — Required: EC fans (code 808)*

B — Required: Kit HT (code 1955)

A+B — Required: EC fans (code 808)*
Kit HT (code 1955)

Required: Antifreeze piping and pumps (code 2432) if hydronic kit is present

Required: Double insultaion on heat exchangers (code 2631) or Double insulation on heat exchangers, pipes and pumps (code 2633) if hydronic kit is present

Required: Negative fluid temperature (code 871)

The diagram shows the temperature limits of full load operation. In case of higher outdoor air temperature, automatically partialized its resources to ensure uninterrupted operation.
Operating limits when working partialized (water */7°C - */44,6°F):
/K, /SL-K: 53°C - 131°F
With Kit HT (all versions): 57°C - 134,6°F

In case of outdoor air temperature higher than 53°C - 127,4°F, some additional cooling equipment for the electrical panel could be necessary. Please refer to our sales department for assessment and quotation.

Units with heat recovery: /D
For the units with heat recovery, the maximum outdoor temperature allowed are 1,0°C - 1,8°F lower than the ones of the corresponding model without heat recovery.

* EC fans are suitable to operate up to 46°C - 114,8°F of outdoor temperature. In case of higher temperatures, fans with oversized motors must be used.

For the specific temperature limits of each model please refer to the selection software ElcaWorld.

SIZE				
FX2-G01 /K /0322	FX2-G01 /K /0402	FX2-G01 /K /0512	FX2-G01 /K /0652	FX2-G01 /K /0772
FX2-G01 /K /0352	FX2-G01 /K /0472	FX2-G01 /K /0572	FX2-G01 /K /0702	FX2-G01 /K /0852

SIZE	
FX2-G01 /K /0902	FX2-G01 /SL-K /1262
FX2-G01 /K /1002	FX2-G01 /SL-K /1322
FX2-G01 /K /1052	FX2-G01 /SL-K /1402
FX2-G01 /K /1102	FX2-G01 /SL-K /1503
FX2-G01 /K /1152	FX2-G01 /SL-K /1593
FX2-G01 /K /1222	FX2-G01 /SL-K /1663
FX2-G01 /K /1262	FX2-G01 /SL-K /1773
FX2-G01 /K /1322	FX2-G01 /SL-K /1883
FX2-G01 /K /1402	FX2-G01 /D /SL-K /0322
FX2-G01 /K /1503	FX2-G01 /D /SL-K /0352
FX2-G01 /K /1593	FX2-G01 /D /SL-K /0402
FX2-G01 /K /1663	FX2-G01 /D /SL-K /0472
FX2-G01 /K /1773	FX2-G01 /D /SL-K /0512
FX2-G01 /K /1883	FX2-G01 /D /SL-K /0572
FX2-G01 /D /K /0322	FX2-G01 /D /SL-K /0652
FX2-G01 /D /K /0352	FX2-G01 /D /SL-K /0702
FX2-G01 /D /K /0402	FX2-G01 /D /SL-K /0772
FX2-G01 /D /K /0472	FX2-G01 /D /SL-K /0852
FX2-G01 /D /K /0512	FX2-G01 /D /SL-K /0902
FX2-G01 /D /K /0572	FX2-G01 /D /SL-K /1002
FX2-G01 /D /K /0652	FX2-G01 /D /SL-K /1052
FX2-G01 /D /K /0702	FX2-G01 /D /SL-K /1102
FX2-G01 /D /K /0772	FX2-G01 /D /SL-K /1152
FX2-G01 /D /K /0852	FX2-G01 /D /SL-K /1222
FX2-G01 /D /K /0902	FX2-G01 /D /SL-K /1262
FX2-G01 /D /K /1002	FX2-G01 /D /SL-K /1322
FX2-G01 /D /K /1052	FX2-G01 /D /SL-K /1402
FX2-G01 /D /K /1102	FX2-G01 /D /SL-K /1503
FX2-G01 /D /K /1152	FX2-G01 /D /SL-K /1593
FX2-G01 /D /K /1222	FX2-G01 /D /SL-K /1663
FX2-G01 /D /K /1262	FX2-G01 /D /SL-K /1773
FX2-G01 /D /K /1322	FX2-G01 /D /SL-K /1883
FX2-G01 /D /K /1402	
FX2-G01 /D /K /1503	
FX2-G01 /D /K /1593	
FX2-G01 /D /K /1663	
FX2-G01 /D /K /1773	
FX2-G01 /D /K /1883	
FX2-G01 /SL-K /0322	
FX2-G01 /SL-K /0352	
FX2-G01 /SL-K /0402	
FX2-G01 /SL-K /0472	
FX2-G01 /SL-K /0512	
FX2-G01 /SL-K /0572	
FX2-G01 /SL-K /0652	
FX2-G01 /SL-K /0702	
FX2-G01 /SL-K /0772	
FX2-G01 /SL-K /0852	
FX2-G01 /SL-K /0902	
FX2-G01 /SL-K /1002	
FX2-G01 /SL-K /1052	
FX2-G01 /SL-K /1102	
FX2-G01 /SL-K /1152	
FX2-G01 /SL-K /1222	

/E 0352 - 1402
/SL-E 0352- 1402

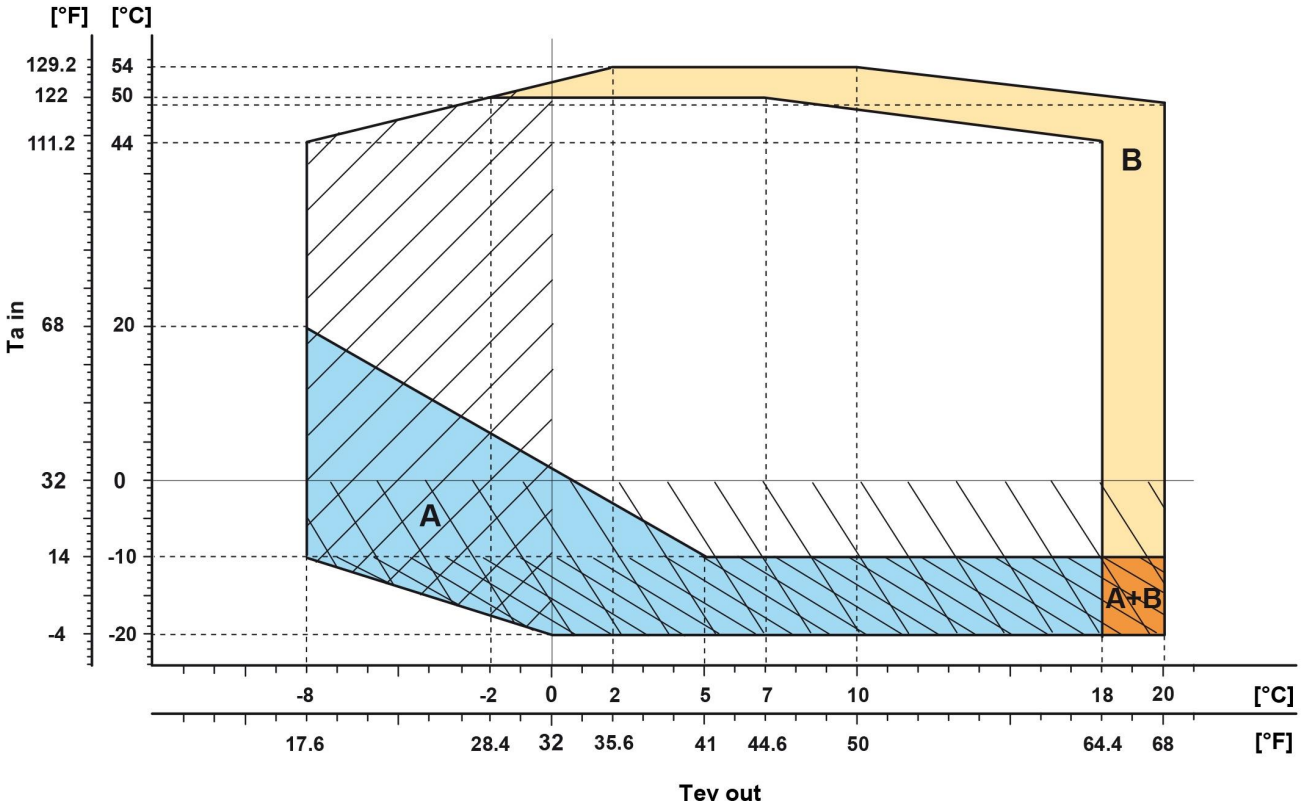

Ta in Air temperature

Tev out Evaporator leaving water temperature

Standard units

A — Required: EC fans (code 808)*

B — Required: Kit HT (code 1955)

A+B — Required: EC fans (code 808)*
Kit HT (code 1955)

Required: Antifreeze piping and pumps (code 2432) if hydronic kit is present

Required: Double insultaion on heat exchangers (code 2631) or Double insulation on heat exchangers, pipes and pumps (code 2633) if hydronic kit is present

Required: Negative fluid temperature (code 871)

The diagram shows the temperature limits of full load operation. In case of higher outdoor air temperature, automatically partialized its resources to ensure uninterrupted operation.
Operating limits when working partialized (water */7°C - */44,6°F):
/E , /SL-E : 55°C - 131°F
With Kit HT (all versions): 57°C - 134,6°F

In case of outdoor air temperature higher than 53°C - 127,4°F, some additional cooling equipment for the electrical panel could be necessary. Please refer to our sales department for assessment and quotation.

Units with heat recovery: /D
For the units with heat recovery, the maximum outdoor temperature allowed are 1,0°C - 1,8°F lower than the ones of the corresponding model without heat recovery.

* EC fans are suitable to operate up to 46°C - 114,8°F of outdoor temperature. In case of higher temperatures, fans with oversized motors must be used.

For the specific temperature limits of each model please refer to the selection software ElcaWorld.

SIZE				
FX2-G01 /E /0352	FX2-G01 /E /0452	FX2-G01 /E /0572	FX2-G01 /E /0652	FX2-G01 /E /0772
FX2-G01 /E /0402	FX2-G01 /E /0472	FX2-G01 /E /0602	FX2-G01 /E /0702	FX2-G01 /E /0852

SIZE	
FX2-G01 /E /0902	FX2-G01 /D /SL-E /1152
FX2-G01 /E /1002	FX2-G01 /D /SL-E /1222
FX2-G01 /E /1052	FX2-G01 /D /SL-E /1322
FX2-G01 /E /1152	FX2-G01 /D /SL-E /1402
FX2-G01 /E /1222	
FX2-G01 /E /1322	
FX2-G01 /E /1402	
FX2-G01 /D /E /0352	
FX2-G01 /D /E /0402	
FX2-G01 /D /E /0452	
FX2-G01 /D /E /0472	
FX2-G01 /D /E /0572	
FX2-G01 /D /E /0602	
FX2-G01 /D /E /0652	
FX2-G01 /D /E /0702	
FX2-G01 /D /E /0772	
FX2-G01 /D /E /0852	
FX2-G01 /D /E /0902	
FX2-G01 /D /E /1002	
FX2-G01 /D /E /1052	
FX2-G01 /D /E /1152	
FX2-G01 /D /E /1222	
FX2-G01 /D /E /1322	
FX2-G01 /D /E /1402	
FX2-G01 /SL-E /0352	
FX2-G01 /SL-E /0402	
FX2-G01 /SL-E /0452	
FX2-G01 /SL-E /0472	
FX2-G01 /SL-E /0572	
FX2-G01 /SL-E /0602	
FX2-G01 /SL-E /0652	
FX2-G01 /SL-E /0702	
FX2-G01 /SL-E /0772	
FX2-G01 /SL-E /0852	
FX2-G01 /SL-E /0902	
FX2-G01 /SL-E /1002	
FX2-G01 /SL-E /1052	
FX2-G01 /SL-E /1152	
FX2-G01 /SL-E /1222	
FX2-G01 /SL-E /1322	
FX2-G01 /SL-E /1402	
FX2-G01 /D /SL-E /0352	
FX2-G01 /D /SL-E /0402	
FX2-G01 /D /SL-E /0452	
FX2-G01 /D /SL-E /0472	
FX2-G01 /D /SL-E /0572	
FX2-G01 /D /SL-E /0602	
FX2-G01 /D /SL-E /0652	
FX2-G01 /D /SL-E /0702	
FX2-G01 /D /SL-E /0772	
FX2-G01 /D /SL-E /0852	
FX2-G01 /D /SL-E /0902	
FX2-G01 /D /SL-E /1002	
FX2-G01 /D /SL-E /1052	

7.2 ETHYLENE GLYCOL MIXTURE

Ethylene glycol and water mixture, used as a heat-conveying fluid, cause a variation in unit performance. For correct data, use the factors indicated in the following tabel.

	Freezing point (°C)							
	0	-5	-10	-15	-20	-25	-30	-35
	Ethylene glycol percentage by weight							
	0%	12%	20%	30%	35%	40%	45%	50%
cPf	1	0,985	0,98	0,974	0,97	0,965	0,964	0,96
cQ	1	1,02	1,04	1,075	1,11	1,14	1,17	1,2
cdp	1	1,07	1,11	1,18	1,22	1,24	1,27	1,3

cPf: cooling power correction factor
cQ: flow correction factor
cdp: pressure drop correction factor

For data concerning other kind of anti-freeze solutions (e,g, propylene glycol) please contact our Sale Department.

7.3 FOULING FACTORS

Performances are based on clean condition of tubes (fouling factor = 1). For different fouling values, performance should be adjusted using the correction factors shown in the following table.

SERIES	FOULING FACTORS	EVAPORATOR			CONDENSER/RECOVERY			DESUPERHEATER
	ff (m² °CW)	F1	FK1	KE [°C]	F2	FK2	KC [°C]	R3
VARIOUS	0	1,000	1,000	0,0	1,000	1,000	0,0	1,000
VARIOUS	$1,80 \times 10^{-5}$	1,000	1,000	0,0	1,000	1,000	0,0	1,000
VARIOUS	$4,40 \times 10^{-5}$	1,000	1,000	0,0	0,990	1,030	1,0	0,990
VARIOUS	$8,80 \times 10^{-5}$	0,960	0,990	0,7	0,980	1,040	1,5	0,980
VARIOUS	$13,20 \times 10^{-5}$	0,944	0,985	1,0	0,964	1,050	2,3	0,964
VARIOUS	$17,20 \times 10^{-5}$	0,930	0,980	1,5	0,950	1,060	3,0	0,950

ff: fouling factors
F1 - F2: potential correction factors
FK1 - FK2: compressor power input correction factors
R3: capacity correction factors
KE: minimum evaporator outlet temperature increase
KC: maximum condenser outlet temperature decrease

8.1 HYDRAULIC DATA

[SI System]

Water flow and pressure drop

Water flow in the plant (side) exchanger is given by:
Q=P/(4,186 x Dt)
Q: water flow (l/s)
Dt: difference between inlet and outlet water temp. (°C)
P: heat exchanger capacity (kW)

Pressure drop is given by:
Dp= K x (3,6 x Q)^2/1000
Q: water flow (l/s)
Dp: pressure drop (kPa)
K: unit size ratio

SIZE	Power supply V/ph/Hz	HEAT EXCHANGER USER SIDE					HEAT RECOVERY EX. USER SIDE			
		K	Q min l/s	Q max l/s	C.A.S. l	C.a. min l	K	Q min l/s	Q max l/s	C.A.S. l
FX2-G01 /K /0322	400/3/50	9,00	10,56	26,67	91,0	1100	-	-	-	-
FX2-G01 /K /0352	400/3/50	9,00	10,56	26,67	91,0	1200	-	-	-	-
FX2-G01 /K /0402	400/3/50	7,72	13,33	31,94	85,0	1400	-	-	-	-
FX2-G01 /K /0472	400/3/50	7,72	13,33	31,94	85,0	1600	-	-	-	-
FX2-G01 /K /0512	400/3/50	4,72	12,50	40,00	140	1800	-	-	-	-
FX2-G01 /K /0572	400/3/50	4,72	12,50	40,00	140	2000	-	-	-	-
FX2-G01 /K /0652	400/3/50	3,77	15,83	46,94	124	2300	-	-	-	-
FX2-G01 /K /0702	400/3/50	3,00	17,50	50,28	230	2500	-	-	-	-
FX2-G01 /K /0772	400/3/50	3,00	17,50	50,28	230	2700	-	-	-	-
FX2-G01 /K /0852	400/3/50	2,14	19,17	54,44	220	3000	-	-	-	-
FX2-G01 /K /0902	400/3/50	1,89	19,17	56,11	210	3300	-	-	-	-
FX2-G01 /K /1002	400/3/50	1,89	19,17	56,11	210	3500	-	-	-	-
FX2-G01 /K /1052	400/3/50	1,46	25,00	63,89	275	3700	-	-	-	-
FX2-G01 /K /1102	400/3/50	1,46	25,00	63,89	275	3800	-	-	-	-
FX2-G01 /K /1152	400/3/50	1,46	25,00	63,89	275	4000	-	-	-	-
FX2-G01 /K /1222	400/3/50	1,37	25,00	68,89	261	4300	-	-	-	-
FX2-G01 /K /1262	400/3/50	1,03	31,11	100,8	310	4400	-	-	-	-
FX2-G01 /K /1322	400/3/50	1,03	31,11	100,8	310	4700	-	-	-	-
FX2-G01 /K /1402	400/3/50	1,03	31,11	100,8	310	4900	-	-	-	-
FX2-G01 /K /1503	400/3/50	0,78	41,67	102,8	575	5300	-	-	-	-
FX2-G01 /K /1593	400/3/50	0,78	41,67	102,8	575	5600	-	-	-	-
FX2-G01 /K /1663	400/3/50	0,55	41,67	97,22	550	5800	-	-	-	-
FX2-G01 /K /1773	400/3/50	0,55	41,67	97,22	550	6200	-	-	-	-
FX2-G01 /K /1883	400/3/50	0,59	41,67	100,0	500	6400	-	-	-	-
FX2-G01 /D /K /0322	400/3/50	9,00	10,56	26,67	91,0	1100	147	0,003	4,556	3,20
FX2-G01 /D /K /0352	400/3/50	9,00	10,56	26,67	91,0	1200	147	0,003	5,361	3,20
FX2-G01 /D /K /0402	400/3/50	7,72	13,33	31,94	85,0	1400	147	0,003	5,944	3,20
FX2-G01 /D /K /0472	400/3/50	7,72	13,33	31,94	85,0	1600	73,0	0,003	6,472	4,40
FX2-G01 /D /K /0512	400/3/50	4,72	12,50	40,00	140	1800	73,0	0,003	7,750	4,40
FX2-G01 /D /K /0572	400/3/50	4,72	12,50	40,00	140	2000	73,0	0,003	8,417	4,40
FX2-G01 /D /K /0652	400/3/50	3,77	15,83	46,94	124	2300	36,0	0,003	9,222	5,80
FX2-G01 /D /K /0702	400/3/50	3,00	17,50	50,28	230	2500	36,0	0,003	10,78	5,80
FX2-G01 /D /K /0772	400/3/50	3,00	17,50	50,28	230	2700	27,0	0,003	11,42	7,40
FX2-G01 /D /K /0852	400/3/50	2,14	19,17	54,44	220	3000	21,0	0,003	12,19	9,00
FX2-G01 /D /K /0902	400/3/50	1,89	19,17	56,11	210	3300	21,0	0,003	13,19	9,00
FX2-G01 /D /K /1002	400/3/50	1,89	19,17	56,11	210	3500	21,0	0,003	14,06	9,00
FX2-G01 /D /K /1052	400/3/50	1,46	25,00	63,89	275	3700	14,8	0,003	15,39	10,5
FX2-G01 /D /K /1102	400/3/50	1,46	25,00	63,89	275	3800	11,0	0,003	16,64	12,0
FX2-G01 /D /K /1152	400/3/50	1,46	25,00	63,89	275	4000	11,0	0,003	15,78	12,0
FX2-G01 /D /K /1222	400/3/50	1,37	25,00	68,89	261	4300	11,0	0,003	17,81	12,0
FX2-G01 /D /K /1262	400/3/50	1,03	31,11	100,8	310	4400	8,50	0,003	19,06	30,0

Q min: minimum water flow admitted to the heat exchanger
Q max: maximum water flow admitted to the heat exchanger
C.a. min: minimum water content admitted in the plant
C.A.S.: Exchanger water content

HYDRAULIC DATA

[SI System]

SIZE	Power supply V/ph/Hz	HEAT EXCHANGER USER SIDE					HEAT RECOVERY EX. USER SIDE			
		K	Q min l/s	Q max l/s	C.A.S. l	C.a. min l	K	Q min l/s	Q max l/s	C.A.S. l
FX2-G01 /D /K /1322	400/3/50	1,03	31,11	100,8	310	4700	8,50	0,003	19,39	30,0
FX2-G01 /D /K /1402	400/3/50	1,03	31,11	100,8	310	4900	8,50	0,003	21,36	30,0
FX2-G01 /D /K /1503	400/3/50	0,78	41,67	102,8	575	5300	9,30	0,003	21,22	13,5
FX2-G01 /D /K /1593	400/3/50	0,78	41,67	102,8	575	5600	5,90	0,003	23,53	16,5
FX2-G01 /D /K /1663	400/3/50	0,55	41,67	97,22	550	5800	4,90	0,003	25,11	18,0
FX2-G01 /D /K /1773	400/3/50	0,55	41,67	97,22	550	6200	4,90	0,003	26,11	18,0
FX2-G01 /D /K /1883	400/3/50	0,59	41,67	100,0	500	6400	3,80	0,003	27,25	45,0
FX2-G01 /SL-K /0322	400/3/50	9,00	10,56	26,67	91,0	1100	-	-	-	-
FX2-G01 /SL-K /0352	400/3/50	9,00	10,56	26,67	91,0	1200	-	-	-	-
FX2-G01 /SL-K /0402	400/3/50	7,72	13,33	31,94	85,0	1400	-	-	-	-
FX2-G01 /SL-K /0472	400/3/50	7,72	13,33	31,94	85,0	1600	-	-	-	-
FX2-G01 /SL-K /0512	400/3/50	4,72	12,50	40,00	140	1800	-	-	-	-
FX2-G01 /SL-K /0572	400/3/50	4,72	12,50	40,00	140	2000	-	-	-	-
FX2-G01 /SL-K /0652	400/3/50	3,77	15,83	46,94	124	2300	-	-	-	-
FX2-G01 /SL-K /0702	400/3/50	3,00	17,50	50,28	230	2500	-	-	-	-
FX2-G01 /SL-K /0772	400/3/50	3,00	17,50	50,28	230	2700	-	-	-	-
FX2-G01 /SL-K /0852	400/3/50	2,14	19,17	54,44	220	3000	-	-	-	-
FX2-G01 /SL-K /0902	400/3/50	1,89	19,17	56,11	210	3300	-	-	-	-
FX2-G01 /SL-K /1002	400/3/50	1,89	19,17	56,11	210	3500	-	-	-	-
FX2-G01 /SL-K /1052	400/3/50	1,46	25,00	63,89	275	3700	-	-	-	-
FX2-G01 /SL-K /1102	400/3/50	1,46	25,00	63,89	275	3800	-	-	-	-
FX2-G01 /SL-K /1152	400/3/50	1,46	25,00	63,89	275	4000	-	-	-	-
FX2-G01 /SL-K /1222	400/3/50	1,37	25,00	68,89	261	4300	-	-	-	-
FX2-G01 /SL-K /1262	400/3/50	1,03	31,11	100,8	310	4400	-	-	-	-
FX2-G01 /SL-K /1322	400/3/50	1,03	31,11	100,8	310	4700	-	-	-	-
FX2-G01 /SL-K /1402	400/3/50	1,03	31,11	100,8	310	4900	-	-	-	-
FX2-G01 /SL-K /1503	400/3/50	0,78	41,67	102,8	575	5300	-	-	-	-
FX2-G01 /SL-K /1593	400/3/50	0,78	41,67	102,8	575	5600	-	-	-	-
FX2-G01 /SL-K /1663	400/3/50	0,55	41,67	97,22	550	5800	-	-	-	-
FX2-G01 /SL-K /1773	400/3/50	0,55	41,67	97,22	550	6200	-	-	-	-
FX2-G01 /SL-K /1883	400/3/50	0,59	41,67	100,0	500	6400	-	-	-	-
FX2-G01 /D /SL-K /0322	400/3/50	9,00	10,56	26,67	91,0	1100	147	0,003	4,556	3,20
FX2-G01 /D /SL-K /0352	400/3/50	9,00	10,56	26,67	91,0	1200	147	0,003	5,361	3,20
FX2-G01 /D /SL-K /0402	400/3/50	7,72	13,33	31,94	85,0	1400	147	0,003	5,944	3,20
FX2-G01 /D /SL-K /0472	400/3/50	7,72	13,33	31,94	85,0	1600	73,0	0,003	6,472	4,40
FX2-G01 /D /SL-K /0512	400/3/50	4,72	12,50	40,00	140	1800	73,0	0,003	7,750	4,40
FX2-G01 /D /SL-K /0572	400/3/50	4,72	12,50	40,00	140	2000	73,0	0,003	8,417	4,40
FX2-G01 /D /SL-K /0652	400/3/50	3,77	15,83	46,94	124	2300	36,0	0,003	9,222	5,80
FX2-G01 /D /SL-K /0702	400/3/50	3,00	17,50	50,28	230	2500	36,0	0,003	10,78	5,80
FX2-G01 /D /SL-K /0772	400/3/50	3,00	17,50	50,28	230	2700	27,0	0,003	11,42	7,40
FX2-G01 /D /SL-K /0852	400/3/50	2,14	19,17	54,44	220	3000	21,0	0,003	12,19	9,00
FX2-G01 /D /SL-K /0902	400/3/50	1,89	19,17	56,11	210	3300	21,0	0,003	13,19	9,00
FX2-G01 /D /SL-K /1002	400/3/50	1,89	19,17	56,11	210	3500	21,0	0,003	14,06	9,00
FX2-G01 /D /SL-K /1052	400/3/50	1,46	25,00	63,89	275	3700	14,8	0,003	15,39	10,5
FX2-G01 /D /SL-K /1102	400/3/50	1,46	25,00	63,89	275	3800	11,0	0,003	16,64	12,0
FX2-G01 /D /SL-K /1152	400/3/50	1,46	25,00	63,89	275	4000	11,0	0,003	15,78	12,0
FX2-G01 /D /SL-K /1222	400/3/50	1,37	25,00	68,89	261	4300	11,0	0,003	17,81	12,0
FX2-G01 /D /SL-K /1262	400/3/50	1,03	31,11	100,8	310	4400	8,50	0,003	19,06	30,0
FX2-G01 /D /SL-K /1322	400/3/50	1,03	31,11	100,8	310	4700	8,50	0,003	19,39	30,0

Q min: minimum water flow admitted to the heat exchanger
Q max: maximum water flow admitted to the heat exchanger
C.a. min: minimum water content admitted in the plant
C.A.S.: Exchanger water content

HYDRAULIC DATA

[SI System]

SIZE	Power supply V/ph/Hz	HEAT EXCHANGER USER SIDE					HEAT RECOVERY EX. USER SIDE			
		K	Q min l/s	Q max l/s	C.A.S. l	C.a. min l	K	Q min l/s	Q max l/s	C.A.S. l
FX2-G01 /D /SL-K /1402	400/3/50	1,03	31,11	100,8	310	4900	8,50	0,003	21,36	30,0
FX2-G01 /D /SL-K /1503	400/3/50	0,78	41,67	102,8	575	5300	9,30	0,003	21,22	13,5
FX2-G01 /D /SL-K /1593	400/3/50	0,78	41,67	102,8	575	5600	5,90	0,003	23,53	16,5
FX2-G01 /D /SL-K /1663	400/3/50	0,55	41,67	97,22	550	5800	4,90	0,003	25,11	18,0
FX2-G01 /D /SL-K /1773	400/3/50	0,55	41,67	97,22	550	6200	4,90	0,003	26,11	18,0
FX2-G01 /D /SL-K /1883	400/3/50	0,59	41,67	100,0	500	6400	3,80	0,003	27,25	45,0
FX2-G01 /E /0352	400/3/50	7,72	13,33	31,94	85,0	1200	-	-	-	-
FX2-G01 /E /0402	400/3/50	7,72	13,33	31,94	85,0	1400	-	-	-	-
FX2-G01 /E /0452	400/3/50	4,72	12,50	40,00	140	1600	-	-	-	-
FX2-G01 /E /0472	400/3/50	4,72	12,50	40,00	140	1700	-	-	-	-
FX2-G01 /E /0572	400/3/50	4,29	15,83	44,44	133	2000	-	-	-	-
FX2-G01 /E /0602	400/3/50	3,00	17,50	50,28	230	2200	-	-	-	-
FX2-G01 /E /0652	400/3/50	3,00	17,50	50,28	230	2300	-	-	-	-
FX2-G01 /E /0702	400/3/50	3,00	17,50	50,28	230	2400	-	-	-	-
FX2-G01 /E /0772	400/3/50	2,14	19,17	54,44	220	2600	-	-	-	-
FX2-G01 /E /0852	400/3/50	1,89	19,17	56,11	210	3000	-	-	-	-
FX2-G01 /E /0902	400/3/50	1,89	19,17	56,11	210	3200	-	-	-	-
FX2-G01 /E /1002	400/3/50	2,06	19,17	58,33	209	3500	-	-	-	-
FX2-G01 /E /1052	400/3/50	1,46	25,00	63,89	275	3700	-	-	-	-
FX2-G01 /E /1152	400/3/50	1,40	25,00	66,94	269	4000	-	-	-	-
FX2-G01 /E /1222	400/3/50	1,37	25,00	68,89	261	4200	-	-	-	-
FX2-G01 /E /1322	400/3/50	0,78	41,67	102,8	575	4600	-	-	-	-
FX2-G01 /E /1402	400/3/50	0,78	41,67	102,8	575	4800	-	-	-	-
FX2-G01 /D /E /0352	400/3/50	7,72	13,33	31,94	85,0	1200	147	0,003	4,083	3,20
FX2-G01 /D /E /0402	400/3/50	7,72	13,33	31,94	85,0	1400	147	0,003	4,583	3,20
FX2-G01 /D /E /0452	400/3/50	4,72	12,50	40,00	140	1600	147	0,003	5,278	3,20
FX2-G01 /D /E /0472	400/3/50	4,72	12,50	40,00	140	1700	73,0	0,003	6,000	4,40
FX2-G01 /D /E /0572	400/3/50	4,29	15,83	44,44	133	2000	73,0	0,003	6,750	4,40
FX2-G01 /D /E /0602	400/3/50	3,00	17,50	50,28	230	2200	73,0	0,003	7,417	4,40
FX2-G01 /D /E /0652	400/3/50	3,00	17,50	50,28	230	2300	50,0	0,003	7,861	5,10
FX2-G01 /D /E /0702	400/3/50	3,00	17,50	50,28	230	2400	36,0	0,003	8,306	5,80
FX2-G01 /D /E /0772	400/3/50	2,14	19,17	54,44	220	2600	36,0	0,003	9,333	5,80
FX2-G01 /D /E /0852	400/3/50	1,89	19,17	56,11	210	3000	27,0	0,003	10,39	7,40
FX2-G01 /D /E /0902	400/3/50	1,89	19,17	56,11	210	3200	21,0	0,003	11,25	9,00
FX2-G01 /D /E /1002	400/3/50	2,06	19,17	58,33	209	3500	21,0	0,003	12,19	9,00
FX2-G01 /D /E /1052	400/3/50	1,46	25,00	63,89	275	3700	21,0	0,003	13,08	9,00
FX2-G01 /D /E /1152	400/3/50	1,40	25,00	66,94	269	4000	15,0	0,003	13,94	10,5
FX2-G01 /D /E /1222	400/3/50	1,37	25,00	68,89	261	4200	11,0	0,003	14,83	12,0
FX2-G01 /D /E /1322	400/3/50	0,78	41,67	102,8	575	4600	11,0	0,003	16,64	12,0
FX2-G01 /D /E /1402	400/3/50	0,78	41,67	102,8	575	4800	9,00	0,003	17,36	30,0
FX2-G01 /SL-E /0352	400/3/50	7,72	13,06	31,94	85,0	1200	-	-	-	-
FX2-G01 /SL-E /0402	400/3/50	7,72	13,33	31,94	85,0	1400	-	-	-	-
FX2-G01 /SL-E /0452	400/3/50	4,72	12,50	40,00	140	1600	-	-	-	-
FX2-G01 /SL-E /0472	400/3/50	4,72	12,50	40,00	140	1700	-	-	-	-
FX2-G01 /SL-E /0572	400/3/50	4,29	15,83	44,44	133	2000	-	-	-	-
FX2-G01 /SL-E /0602	400/3/50	3,00	17,50	50,28	230	2200	-	-	-	-
FX2-G01 /SL-E /0652	400/3/50	3,00	17,50	50,28	230	2300	-	-	-	-
FX2-G01 /SL-E /0702	400/3/50	3,00	17,50	50,28	230	2400	-	-	-	-
FX2-G01 /SL-E /0772	400/3/50	2,14	19,17	54,44	220	2600	-	-	-	-

Q min: minimum water flow admitted to the heat exchanger
Q max: maximum water flow admitted to the heat exchanger
C.a. min: minimum water content admitted in the plant
C.A.S.: Exchanger water content

HYDRAULIC DATA

[SI System]

SIZE	Power supply V/ph/Hz	HEAT EXCHANGER USER SIDE					HEAT RECOVERY EX. USER SIDE			
		K	Q min l/s	Q max l/s	C.A.S. l	C.a. min l	K	Q min l/s	Q max l/s	C.A.S. l
FX2-G01 /SL-E /0852	400/3/50	1,89	19,17	56,11	210	3000	-	-	-	-
FX2-G01 /SL-E /0902	400/3/50	1,89	19,17	56,11	210	3200	-	-	-	-
FX2-G01 /SL-E /1002	400/3/50	2,06	19,17	58,33	209	3500	-	-	-	-
FX2-G01 /SL-E /1052	400/3/50	1,46	25,00	63,89	275	3700	-	-	-	-
FX2-G01 /SL-E /1152	400/3/50	1,40	25,00	66,94	269	4000	-	-	-	-
FX2-G01 /SL-E /1222	400/3/50	1,37	25,00	68,89	261	4200	-	-	-	-
FX2-G01 /SL-E /1322	400/3/50	0,78	41,67	102,8	575	4600	-	-	-	-
FX2-G01 /SL-E /1402	400/3/50	0,78	41,67	102,8	575	4800	-	-	-	-
FX2-G01 /D /SL-E /0352	400/3/50	7,72	13,06	31,94	85,0	1200	147	0,003	4,083	3,20
FX2-G01 /D /SL-E /0402	400/3/50	7,72	13,33	31,94	85,0	1400	147	0,003	4,583	3,20
FX2-G01 /D /SL-E /0452	400/3/50	4,72	12,50	40,00	140	1600	147	0,003	5,278	3,20
FX2-G01 /D /SL-E /0472	400/3/50	4,72	12,50	40,00	140	1700	73,0	0,003	6,000	4,40
FX2-G01 /D /SL-E /0572	400/3/50	4,29	15,83	44,44	133	2000	73,0	0,003	6,750	4,40
FX2-G01 /D /SL-E /0602	400/3/50	3,00	17,50	50,28	230	2200	73,0	0,003	7,417	4,40
FX2-G01 /D /SL-E /0652	400/3/50	3,00	17,50	50,28	230	2300	50,0	0,003	7,861	5,10
FX2-G01 /D /SL-E /0702	400/3/50	3,00	17,50	50,28	230	2400	36,0	0,003	8,306	5,80
FX2-G01 /D /SL-E /0772	400/3/50	2,14	19,17	54,44	220	2600	36,0	0,003	9,333	5,80
FX2-G01 /D /SL-E /0852	400/3/50	1,89	19,17	56,11	210	3000	27,0	0,003	10,39	7,40
FX2-G01 /D /SL-E /0902	400/3/50	1,89	19,17	56,11	210	3200	21,0	0,003	11,25	9,00
FX2-G01 /D /SL-E /1002	400/3/50	2,06	19,17	58,33	209	3500	21,0	0,003	12,19	9,00
FX2-G01 /D /SL-E /1052	400/3/50	1,46	25,00	63,89	275	3700	21,0	0,003	13,08	9,00
FX2-G01 /D /SL-E /1152	400/3/50	1,40	25,00	66,94	269	4000	15,0	0,003	13,94	10,5
FX2-G01 /D /SL-E /1222	400/3/50	1,37	25,00	68,89	261	4200	11,0	0,003	14,83	12,0
FX2-G01 /D /SL-E /1322	400/3/50	0,78	41,67	102,8	575	4600	11,0	0,003	16,64	12,0
FX2-G01 /D /SL-E /1402	400/3/50	0,78	41,67	102,8	575	4800	9,00	0,003	17,36	30,0

Q min: minimum water flow admitted to the heat exchanger
Q max: maximum water flow admitted to the heat exchanger
C.a. min: minimum water content admitted in the plant
C.A.S.: Exchanger water content

9.1 ELECTRICAL DATA FX2-G01 /K

[SI System]

SIZE	Power supply V/ph/Hz	Maximum values								
		Compressor				Fans (1)		Total (1)(2)		
		n	F.L.I. [kW]	F.L.A. [A]	L.R.A. [A]	F.L.I. [kW]	F.L.A. [A]	F.L.I. [kW]	F.L.A. [A]	S.A. [A]
0322	400/3/50	2	2x 65,4	2x 106,3	2x 290	1,900	4	138,0	228	371
0352	400/3/50	2	2x 74,1	2x 120,6	2x 350	1,900	4	156,0	257	444
0402	400/3/50	2	1x 84,3 + 1x 74,1	1x 135 + 1x 120,6	1x 423 + 1x 350	1,900	4	168,0	275	521
0472	400/3/50	2	2x 84,3	2x 135	2x 423	1,900	4	180,0	293	532
0512	400/3/50	2	2x 103,7	2x 169,1	2x 267	1,900	4	219,0	362	398
0572	400/3/50	2	1x 131 + 1x 103,7	1x 214 + 1x 169,1	1x 341 + 1x 267	1,900	4	248,0	410	476
0652	400/3/50	2	2x 131	2x 214	2x 341	1,900	4	277,0	459	510
0702	400/3/50	2	2x 131	2x 214	2x 341	1,900	4	277,0	459	510
0772	400/3/50	2	1x 167,1 + 1x 131	1x 266 + 1x 214	1x 465 + 1x 341	1,900	4	315,0	515	638
0852	400/3/50	2	2x 167,1	2x 266	2x 465	1,900	4	353,0	571	683
0902	400/3/50	2	1x 192,7 + 1x 167,1	1x 313 + 1x 266	1x 586 + 1x 465	1,900	4	381,0	622	808
1002	400/3/50	2	2x 192,7	2x 313	2x 586	1,900	4	408,0	673	839
1052	400/3/50	2	1x 218 + 1x 192,7	1x 353 + 1x 313	1x 650 + 1x 586	1,900	4	434,0	713	903
1102	400/3/50	2	2x 218	2x 353	2x 650	1,900	4	459,0	753	927
1152	400/3/50	2	2x 218	2x 353	2x 650	1,900	4	463,0	761	935
1222	400/3/50	2	2x 218	2x 353	2x 650	1,900	4	463,0	761	935
1262	400/3/50	2	1x 262 + 1x 218	1x 427 + 1x 353	1x 917 + 1x 650	1,900	4	507,0	835	1202
1322	400/3/50	2	2x 262	2x 427	2x 917	1,900	4	554,0	916	1251
1402	400/3/50	2	2x 262	2x 427	2x 917	1,900	4	554,0	916	1251
1503	400/3/50	3	3x 192,7	3x 313	3x 586	1,900	4	612,0	1009	1068
1593	400/3/50	3	2x 218 + 1x 192,7	2x 353 + 1x 313	2x 650 + 1x 586	1,900	4	663,0	1089	1156
1663	400/3/50	3	3x 218	3x 353	3x 650	1,900	4	688,0	1129	1180
1773	400/3/50	3	3x 218	3x 353	3x 650	1,900	4	692,0	1137	1188
1883	400/3/50	3	3x 218	3x 353	3x 650	1,900	4	692,0	1137	1188

F.L.I.: Full load power
F.L.A.: Full load current
L.R.A.: Locked rotor amperes for single compressor
S.A.: Inrush current

(1) Values calculated referring to the version with the maximum number of fans working at the max absorbed current
(1)(2) Safety values to be considered when cabling the unit for power supply and line-protections

Data valid for standard units without any additional option.

Plant (side) cooling exchanger water (in/out) 12,00°C/7,00°C; Source (side) heat exchanger air (in) 35,0°C.

Voltage tolerance: 10%
Maximum voltage unbalance: 2%

Give the typical operating conditions of units designed for outdoor installation, which can be associated (according to reference document IEC 60721) to the following classes:
- climatic conditions class 4K4H: air temperature range from -20 up to 55°C (*), relative humidity range from 4 up to 100%, with possible precipitations, at air pressure from 70 and 106 kPa and a maximum solar radiation of 1120 W/m2
- special climatic conditions negligible
- biological conditions class 4B1 and 4C2: locations in a generic urban area
- mechanically active substances class 4S2: locations in areas with sand or dust representative of urban areas
- mechanical conditions class 4M1: locations protected from significant vibrations or shocks

The required protection level for safe operation, according to reference document IEC 60529, is IP43XW (protection against access, to the most critical unit's parts, of external devices with diameter larger than 1 mm and rain).
The unit can be considered IP44XW protected, i.e. protected against access of external devices (with diameter larger than 1 mm) and water in general.

(*) for the unit's operating limits, see "selection limits" section

ELECTRICAL DATA FX2-G01 /SL-K

[SI System]

SIZE	Power supply V/ph/Hz	Maximum values								
		Compressor				Fans (1)		Total (1)(2)		
		n	F.L.I. [kW]	F.L.A. [A]	L.R.A. [A]	F.L.I. [kW]	F.L.A. [A]	F.L.I. [kW]	F.L.A. [A]	S.A. [A]
0322	400/3/50	2	2x 65,4	2x 106,3	2x 290	1,900	4	138,0	228	371
0352	400/3/50	2	1x 84,3 + 1x 65,4	1x 135 + 1x 106,3	1x 423 + 1x 290	1,900	4	159,0	261	508
0402	400/3/50	2	2x 84,3	2x 135	2x 423	1,900	4	180,0	293	532
0472	400/3/50	2	2x 84,3	2x 135	2x 423	1,900	4	180,0	293	532
0512	400/3/50	2	1x 116,2 + 1x 84,3	1x 190,6 + 1x 135	1x 314 + 1x 229	1,900	4	214,0	353	427
0572	400/3/50	2	2x 116,2	2x 190,6	2x 314	1,900	4	248,0	412	473
0652	400/3/50	2	2x 131	2x 214	2x 341	1,900	4	277,0	459	510
0702	400/3/50	2	2x 131	2x 214	2x 341	1,900	4	281,0	467	518
0772	400/3/50	2	1x 167,1 + 1x 131	1x 266 + 1x 214	1x 465 + 1x 341	1,900	4	317,0	519	642
0852	400/3/50	2	2x 167,1	2x 266	2x 465	1,900	4	353,0	571	683
0902	400/3/50	2	1x 192,7 + 1x 167,1	1x 313 + 1x 266	1x 586 + 1x 465	1,900	4	381,0	622	808
1002	400/3/50	2	2x 192,7	2x 313	2x 586	1,900	4	408,0	673	839
1052	400/3/50	2	1x 218 + 1x 192,7	1x 353 + 1x 313	1x 650 + 1x 586	1,900	4	435,0	717	907
1102	400/3/50	2	2x 218	2x 353	2x 650	1,900	4	463,0	761	935
1152	400/3/50	2	2x 218	2x 353	2x 650	1,900	4	466,0	768	942
1222	400/3/50	2	2x 218	2x 353	2x 650	1,900	4	466,0	768	942
1262	400/3/50	2	1x 262 + 1x 218	1x 427 + 1x 353	1x 917 + 1x 650	1,900	4	510,0	842	1209
1322	400/3/50	2	2x 262	2x 427	2x 917	1,900	4	554,0	916	1251
1402	400/3/50	2	2x 262	2x 427	2x 917	1,900	4	558,0	924	1259
1503	400/3/50	3	3x 192,7	3x 313	3x 586	1,900	4	612,0	1009	1068
1593	400/3/50	3	2x 218 + 1x 192,7	2x 353 + 1x 313	2x 650 + 1x 586	1,900	4	667,0	1097	1164
1663	400/3/50	3	3x 218	3x 353	3x 650	1,900	4	692,0	1137	1188
1773	400/3/50	3	3x 218	3x 353	3x 650	1,900	4	692,0	1137	1188
1883	400/3/50	3	3x 218	3x 353	3x 650	1,900	4	692,0	1137	1188

F.L.I.: Full load power
F.L.A.: Full load current
L.R.A.: Locked rotor amperes for single compressor
S.A.: Inrush current

(1) Values calculated referring to the version with the maximum number of fans working at the max absorbed current
(1)(2) Safety values to be considered when cabling the unit for power supply and line-protections

Data valid for standard units without any additional option.

Plant (side) cooling exchanger water (in/out) 12,00°C/7,00°C; Source (side) heat exchanger air (in) 35,0°C.

Voltage tolerance: 10%
Maximum voltage unbalance: 2%

Give the typical operating conditions of units designed for outdoor installation, which can be associated (according to reference document IEC 60721) to the following classes:
- climatic conditions class 4K4H: air temperature range from -20 up to 55°C (*), relative humidity range from 4 up to 100%, with possible precipitations, at air pressure from 70 and 106 kPa and a maximum solar radiation of 1120 W/m2
- special climatic conditions negligible
- biological conditions class 4B1 and 4C2: locations in a generic urban area
- mechanically active substances class 4S2: locations in areas with sand or dust representative of urban areas
- mechanical conditions class 4M1: locations protected from significant vibrations or shocks

The required protection level for safe operation, according to reference document IEC 60529, is IP43XW (protection against access, to the most critical unit's parts, of external devices with diameter larger than 1 mm and rain).
The unit can be considered IP44XW protected, i.e. protected against access of external devices (with diameter larger than 1 mm) and water in general.

(*) for the unit's operating limits, see "selection limits" section

ELECTRICAL DATA FX2-G01 /E

[SI System]

SIZE	Power supply V/ph/Hz	Maximum values								
		Compressor				Fans (1)		Total (1)(2)		
		n	F.L.I. [kW]	F.L.A. [A]	L.R.A. [A]	F.L.I. [kW]	F.L.A. [A]	F.L.I. [kW]	F.L.A. [A]	S.A. [A]
0352	400/3/50	2	2x 65,4	2x 106,3	2x 290	1,900	4	142,0	236	379
0402	400/3/50	2	2x 74,1	2x 120,6	2x 350	1,900	4	163,0	272	460
0452	400/3/50	2	2x 84,3	2x 135	2x 423	1,900	4	184,0	301	540
0472	400/3/50	2	2x 84,3	2x 135	2x 423	1,900	4	184,0	301	540
0572	400/3/50	2	2x 103,7	2x 169,1	2x 267	1,900	4	226,0	377	413
0602	400/3/50	2	2x 116,2	2x 190,6	2x 314	1,900	4	251,0	420	481
0652	400/3/50	2	1x 131 + 1x 116,2	1x 214 + 1x 190,6	1x 341 + 1x 314	1,900	4	268,0	448	512
0702	400/3/50	2	2x 131	2x 214	2x 341	1,900	4	285,0	475	525
0772	400/3/50	2	2x 131	2x 214	2x 341	1,900	4	285,0	475	525
0852	400/3/50	2	1x 167,1 + 1x 131	1x 266 + 1x 214	1x 465 + 1x 341	1,900	4	323,0	531	653
0902	400/3/50	2	2x 167,1	2x 266	2x 465	1,900	4	361,0	587	698
1002	400/3/50	2	1x 192,7 + 1x 167,1	1x 313 + 1x 266	1x 586 + 1x 465	1,900	4	388,0	638	823
1052	400/3/50	2	2x 192,7	2x 313	2x 586	1,900	4	416,0	688	854
1152	400/3/50	2	1x 218 + 1x 192,7	1x 353 + 1x 313	1x 650 + 1x 586	1,900	4	443,0	732	922
1222	400/3/50	2	2x 218	2x 353	2x 650	1,900	4	470,0	776	950
1322	400/3/50	2	2x 218	2x 353	2x 650	1,900	4	470,0	776	950
1402	400/3/50	2	1x 262 + 1x 218	1x 427 + 1x 353	1x 917 + 1x 650	1,900	4	518,0	858	1225

F.L.I.: Full load power
F.L.A.: Full load current
L.R.A.: Locked rotor amperes for single compressor
S.A.: Inrush current

(1) Values calculated referring to the version with the maximum number of fans working at the max absorbed current
(1)(2) Safety values to be considered when cabling the unit for power supply and line-protections

Data valid for standard units without any additional option.

Plant (side) cooling exchanger water (in/out) 12,00°C/7,00°C; Source (side) heat exchanger air (in) 35,0°C.

Voltage tolerance: 10%
Maximum voltage unbalance: 2%

Give the typical operating conditions of units designed for outdoor installation, which can be associated (according to reference document IEC 60721) to the following classes:
- climatic conditions class 4K4H: air temperature range from -20 up to 55°C (*), relative humidity range from 4 up to 100%, with possible precipitations, at air pressure from 70 and 106 kPa and a maximum solar radiation of 1120 W/m2
- special climatic conditions negligible
- biological conditions class 4B1 and 4C2: locations in a generic urban area
- mechanically active substances class 4S2: locations in areas with sand or dust representative of urban areas
- mechanical conditions class 4M1: locations protected from significant vibrations or shocks

The required protection level for safe operation, according to reference document IEC 60529, is IP43XW (protection against access, to the most critical unit's parts, of external devices with diameter larger than 1 mm and rain).
The unit can be considered IP44XW protected, i.e. protected against access of external devices (with diameter larger than 1 mm) and water in general.

(*) for the unit's operating limits, see "selection limits" section

ELECTRICAL DATA FX2-G01 /SL-E

[SI System]

SIZE	Power supply V/ph/Hz	Maximum values								
		Compressor				Fans (1)		Total (1)(2)		
		n	F.L.I. [kW]	F.L.A. [A]	L.R.A. [A]	F.L.I. [kW]	F.L.A. [A]	F.L.I. [kW]	F.L.A. [A]	S.A. [A]
0352	400/3/50	2	2x 65,4	2x 106,3	2x 290	1,900	4	142,0	236	379
0402	400/3/50	2	2x 74,1	2x 120,6	2x 350	1,900	4	163,0	272	460
0452	400/3/50	2	2x 84,3	2x 135	2x 423	1,900	4	184,0	301	540
0472	400/3/50	2	2x 84,3	2x 135	2x 423	1,900	4	184,0	301	540
0572	400/3/50	2	2x 103,7	2x 169,1	2x 267	1,900	4	226,0	377	413
0602	400/3/50	2	2x 116,2	2x 190,6	2x 314	1,900	4	251,0	420	481
0652	400/3/50	2	1x 131 + 1x 116,2	1x 214 + 1x 190,6	1x 341 + 1x 314	1,900	4	268,0	448	512
0702	400/3/50	2	2x 131	2x 214	2x 341	1,900	4	285,0	475	525
0772	400/3/50	2	2x 131	2x 214	2x 341	1,900	4	285,0	475	525
0852	400/3/50	2	1x 167,1 + 1x 131	1x 266 + 1x 214	1x 465 + 1x 341	1,900	4	323,0	531	653
0902	400/3/50	2	2x 167,1	2x 266	2x 465	1,900	4	361,0	587	698
1002	400/3/50	2	1x 192,7 + 1x 167,1	1x 313 + 1x 266	1x 586 + 1x 465	1,900	4	388,0	638	823
1052	400/3/50	2	2x 192,7	2x 313	2x 586	1,900	4	416,0	688	854
1152	400/3/50	2	1x 218 + 1x 192,7	1x 353 + 1x 313	1x 650 + 1x 586	1,900	4	443,0	732	922
1222	400/3/50	2	2x 218	2x 353	2x 650	1,900	4	470,0	776	950
1322	400/3/50	2	2x 218	2x 353	2x 650	1,900	4	470,0	776	950
1402	400/3/50	2	1x 262 + 1x 218	1x 427 + 1x 353	1x 917 + 1x 650	1,900	4	518,0	858	1225

F.L.I.: Full load power
F.L.A.: Full load current
L.R.A.: Locked rotor amperes for single compressor
S.A.: Inrush current

(1) Values calculated referring to the version with the maximum number of fans working at the max absorbed current
(1)(2) Safety values to be considered when cabling the unit for power supply and line-protections

Data valid for standard units without any additional option.

Plant (side) cooling exchanger water (in/out) 12,00°C/7,00°C; Source (side) heat exchanger air (in) 35,0°C.

Voltage tolerance: 10%
Maximum voltage unbalance: 2%

Give the typical operating conditions of units designed for outdoor installation, which can be associated (according to reference document IEC 60721) to the following classes:
- climatic conditions class 4K4H: air temperature range from -20 up to 55°C (*), relative humidity range from 4 up to 100%, with possible precipitations, at air pressure from 70 and 106 kPa and a maximum solar radiation of 1120 W/m2
- special climatic conditions negligible
- biological conditions class 4B1 and 4C2: locations in a generic urban area
- mechanically active substances class 4S2: locations in areas with sand or dust representative of urban areas
- mechanical conditions class 4M1: locations protected from significant vibrations or shocks

The required protection level for safe operation, according to reference document IEC 60529, is IP43XW (protection against access, to the most critical unit's parts, of external devices with diameter larger than 1 mm and rain).
The unit can be considered IP44XW protected, i.e. protected against access of external devices (with diameter larger than 1 mm) and water in general.

(*) for the unit's operating limits, see "selection limits" section

ELECTRICAL DATA

MAXIMUM CABLES/BARS SECTION CONNECTED TO MAIN SWITCH AND SHORT TIME CURRENT STANDARD UNITS

<table>
<tr><th rowspan="2">VERSIONS /K /SL-K
SIZE</th><th rowspan="2">Main switch type (STD)</th><th rowspan="2">Main switch type (HT)</th><th rowspan="2">ICW (0,3s) Short time current rms (STD)</th><th rowspan="2">ICW (0,3s) Short time current rms (HT)</th><th colspan="2">Further technical data</th></tr>
<tr><th>Cable section</th><th>Bar dimensions</th></tr>
<tr><th>[kA]</th><th>[kA]</th><th>∅ [mm²]</th><th>☐ [mm]</th></tr>
<tr><td>0322</td><td rowspan="4">SIRCO 3X400A</td><td rowspan="3">SIRCO 3X400A</td><td rowspan="8">25</td><td rowspan="6">25</td><td colspan="2" rowspan="19">https://www.socomec.com/files/live/sites/systemsite/files/DOCUMENTATION/SCP_hors_cata/dcg_145023uk.pdf</td></tr>
<tr><td>0352</td></tr>
<tr><td>0402</td></tr>
<tr><td>0472</td><td rowspan="3">SIRCO AC 3X630A</td></tr>
<tr><td>0512</td><td rowspan="4">SIRCO AC 3X630A</td></tr>
<tr><td>0572</td></tr>
<tr><td>0652</td><td rowspan="3">SIRCO CD 3X800A</td><td rowspan="3">27</td></tr>
<tr><td>0702</td></tr>
<tr><td>0772</td><td rowspan="3">SIRCO CD 3X800A</td><td rowspan="3">27</td></tr>
<tr><td>0852</td><td rowspan="4">SIRCO CD 3X1000A</td><td rowspan="11">50</td></tr>
<tr><td>0902</td></tr>
<tr><td>1002</td><td rowspan="5">SIRCO CD 3X1000A</td><td rowspan="10">50</td></tr>
<tr><td>1052</td></tr>
<tr><td>1102</td><td rowspan="6">SIRCO CD 3X1250A</td></tr>
<tr><td>1152</td></tr>
<tr><td>1222</td></tr>
<tr><td>1262</td><td rowspan="3">SIRCO CD 3X1250A</td></tr>
<tr><td>1322</td></tr>
<tr><td>1402</td></tr>
<tr><td>1503</td><td rowspan="5">VC5P3x1600A</td><td rowspan="5">VC5P3x1600A</td></tr>
<tr><td>1593</td></tr>
<tr><td>1663</td></tr>
<tr><td>1773</td></tr>
<tr><td>1883</td></tr>
</table>

Electrical data valid for units without any additional option

Voltage tolerance: 10%
Maximum voltage unbalance: 2%

ELECTRICAL DATA

<table>
<tr><th rowspan="2">VERSIONS /E /SL-E</th><th rowspan="3">Main switch type (STD)</th><th rowspan="3">Main switch type (HT)</th><th rowspan="2">ICW (0,3s) Short time current rms (STD)</th><th rowspan="2">ICW (0,3s) Short time current rms (HT)</th><th colspan="2">Further technical data</th></tr>
<tr><th>Cable section</th><th>Bar dimensions</th></tr>
<tr><th>SIZE</th><th>[kA]</th><th>[kA]</th><th>∅ [mm²]</th><th>☐ [mm]</th></tr>
<tr><td>0352</td><td rowspan="4">SIRCO 3X400A</td><td rowspan="2">SIRCO 3X400A</td><td rowspan="8">25</td><td rowspan="6">25</td><td colspan="2" rowspan="17">https://www.socomec.com/files/live/sites/systemsite/files/DOCUMENTATION/SCP_hors_cata/dcg_145023uk.pdf</td></tr>
<tr><td>0402</td></tr>
<tr><td>0452</td><td rowspan="4">SIRCO AC 3X630A</td></tr>
<tr><td>0472</td></tr>
<tr><td>0572</td><td rowspan="5">SIRCO AC 3X630A</td></tr>
<tr><td>0602</td></tr>
<tr><td>0652</td><td rowspan="4">SIRCO CD 3X800A</td><td rowspan="4">27</td></tr>
<tr><td>0702</td></tr>
<tr><td>0772</td></tr>
<tr><td>0852</td><td rowspan="3">SIRCO CD 3X800A</td><td rowspan="2">27</td></tr>
<tr><td>0902</td><td rowspan="3">SIRCO CD 3X1000A</td><td rowspan="9">50</td></tr>
<tr><td>1002</td></tr>
<tr><td>1052</td><td rowspan="4">SIRCO CD 3X1000A</td><td rowspan="7">50</td></tr>
<tr><td>1152</td><td rowspan="6">SIRCO CD 3X1250A</td></tr>
<tr><td>1222</td></tr>
<tr><td>1322</td></tr>
<tr><td>1402</td><td>SIRCO CD 3X1250A</td></tr>
</table>

Electrical data valid for units without any additional option

Voltage tolerance: 10%
Maximum voltage unbalance: 2%

10.1 FULL LOAD SOUND LEVEL FX2-G01 /K

SOUND POWER LEVEL IN COOLING									
SIZE	Octave band [Hz]								Total sound level dB(A)
	63	125	250	500	1000	2000	4000	8000	
	Sound power level dB								
0322	90	97	98	97	95	89	82	72	**99**
0352	90	97	98	97	95	89	82	72	**99**
0402	90	97	98	97	95	89	82	72	**99**
0472	91	98	99	98	96	90	83	73	**100**
0512	91	98	99	98	96	90	83	73	**100**
0572	91	98	99	98	96	90	83	73	**100**
0652	91	98	99	98	96	90	83	73	**100**
0702	93	100	101	100	98	92	85	75	**102**
0772	93	100	101	100	98	92	85	75	**102**
0852	93	100	101	100	98	92	85	75	**102**
0902	94	101	102	101	99	93	86	76	**103**
1002	94	101	102	101	99	93	86	76	**103**
1052	95	102	103	102	100	94	87	77	**104**
1102	95	102	103	102	100	94	87	77	**104**
1152	95	102	103	102	100	94	87	77	**104**
1222	95	102	103	102	100	94	87	77	**104**
1262	96	103	104	103	101	95	88	78	**105**
1322	97	104	105	104	102	96	89	78	**106**
1402	97	104	105	104	102	96	89	78	**106**
1503	97	104	105	104	102	96	89	78	**106**
1593	97	104	105	104	102	96	89	78	**106**
1663	97	104	105	104	102	96	89	78	**106**
1773	97	104	105	104	102	96	89	78	**106**
1883	97	104	105	104	102	96	89	78	**106**

Working conditions
Plant (side) cooling exchanger water (in/out) 12,00°C/7,00°C; Source (side) heat exchanger air (in) 35,0°C.
Sound power on the basis of measurements taken in compliance with ISO 9614.
Such certification refers specifically to the sound Power Level in dB(A). This is therefore the only acoustic data to be considered as binding.
Sound power level in cooling, outdoors.

SOUND PRESSURE LEVEL									
SIZE	Octave band [Hz]								Total sound level dB(A)
	63	125	250	500	1000	2000	4000	8000	
	Sound pressure level dB								
0322	58	65	66	65	63	57	50	40	**67**
0352	58	65	66	65	63	57	50	40	**67**
0402	58	65	66	65	63	57	50	40	**67**
0472	59	66	67	66	64	58	51	41	**68**
0512	59	66	67	66	64	58	51	41	**68**
0572	59	66	67	66	64	58	51	41	**68**
0652	59	66	67	66	64	58	51	41	**68**
0702	61	68	69	68	66	60	53	43	**70**
0772	60	67	68	67	65	59	52	42	**69**
0852	60	67	68	67	65	59	52	42	**69**
0902	61	68	69	68	66	60	53	43	**70**
1002	61	68	69	68	66	60	53	43	**70**
1052	62	69	70	69	67	61	54	44	**71**

Working conditions
Plant (side) cooling exchanger water (in/out) 12,00°C/7,00°C; Source (side) heat exchanger air (in) 35,0°C.
Average sound pressure level at 10m distance, unit in a free field on a reflective surface; non-binding value calculated from the sound power level.

FULL LOAD SOUND LEVEL FX2-G01 /K

SOUND PRESSURE LEVEL									
SIZE	Octave band [Hz]								Total sound level dB(A)
	63	125	250	500	1000	2000	4000	8000	
	Sound pressure level dB								
1102	62	69	70	69	67	61	54	44	**71**
1152	62	69	70	69	67	61	54	44	**71**
1222	62	69	70	69	67	61	54	44	**71**
1262	63	70	71	70	68	62	55	45	**72**
1322	64	71	72	71	69	63	56	45	**73**
1402	64	71	72	71	69	63	56	45	**73**
1503	64	71	72	71	69	63	56	45	**73**
1593	64	71	72	71	69	63	56	45	**73**
1663	64	71	72	71	69	63	56	45	**73**
1773	64	71	72	71	69	63	56	45	**73**
1883	64	71	72	71	69	63	56	45	**73**

Working conditions

Plant (side) cooling exchanger water (in/out) 12,00°C/7,00°C; Source (side) heat exchanger air (in) 35,0°C.

Average sound pressure level at 10m distance, unit in a free field on a reflective surface; non-binding value calculated from the sound power level.

FULL LOAD SOUND LEVEL FX2-G01 /SL-K

SOUND POWER LEVEL IN COOLING									
SIZE	Octave band [Hz]								Total sound level dB(A)
	63	125	250	500	1000	2000	4000	8000	
	Sound power level dB								
0322	79	77	80	84	85	76	64	57	**87**
0352	79	77	80	84	85	76	64	57	**87**
0402	80	78	81	85	86	77	65	58	**88**
0472	80	78	81	85	86	77	65	58	**88**
0512	81	79	82	86	87	78	66	59	**89**
0572	81	79	82	86	87	78	66	59	**89**
0652	81	79	82	86	87	78	66	59	**89**
0702	82	81	85	87	88	76	66	58	**90**
0772	84	83	86	88	89	77	67	59	**91**
0852	84	83	86	88	89	77	67	59	**91**
0902	85	84	87	89	90	78	68	60	**92**
1002	85	84	87	89	90	78	68	60	**92**
1052	86	85	88	90	91	79	69	61	**93**
1102	86	85	88	90	91	79	69	61	**93**
1152	86	85	89	92	92	79	69	61	**94**
1222	86	85	89	92	92	79	69	61	**94**
1262	86	85	89	92	92	79	69	61	**94**
1322	86	85	89	92	92	79	69	61	**94**
1402	86	85	89	92	92	79	69	61	**94**
1503	86	85	89	92	92	79	69	61	**94**
1593	86	85	89	92	92	79	69	61	**94**
1663	86	85	89	92	92	79	69	61	**94**
1773	86	85	89	92	92	79	69	61	**94**
1883	88	87	90	93	93	80	70	62	**95**

Working conditions
Plant (side) cooling exchanger water (in/out) 12,00°C/7,00°C; Source (side) heat exchanger air (in) 35,0°C.
Sound power on the basis of measurements taken in compliance with ISO 9614.
Such certification refers specifically to the sound Power Level in dB(A). This is therefore the only acoustic data to be considered as binding.
Sound power level in cooling, outdoors.

SOUND PRESSURE LEVEL									
SIZE	Octave band [Hz]								Total sound level dB(A)
	63	125	250	500	1000	2000	4000	8000	
	Sound pressure level dB								
0322	47	45	48	52	53	44	32	25	**55**
0352	47	45	48	52	53	44	32	25	**55**
0402	48	46	49	53	54	45	33	26	**56**
0472	48	46	49	53	54	45	33	26	**56**
0512	49	47	50	54	55	46	34	27	**57**
0572	49	47	50	54	55	46	34	27	**57**
0652	49	47	50	54	55	46	34	27	**57**
0702	49	48	52	54	55	43	33	25	**57**
0772	51	50	53	55	56	44	34	26	**58**
0852	51	50	53	55	56	44	34	26	**58**
0902	52	51	54	56	57	45	35	27	**59**
1002	52	51	54	56	57	45	35	27	**59**
1052	53	52	55	57	58	46	36	28	**60**

Working conditions
Plant (side) cooling exchanger water (in/out) 12,00°C/7,00°C; Source (side) heat exchanger air (in) 35,0°C.
Average sound pressure level at 10m distance, unit in a free field on a reflective surface; non-binding value calculated from the sound power level.

FULL LOAD SOUND LEVEL FX2-G01 /SL-K

SOUND PRESSURE LEVEL									
SIZE	Octave band [Hz]								Total sound level dB(A)
	63	125	250	500	1000	2000	4000	8000	
	Sound pressure level dB								
1102	53	52	55	57	58	46	36	28	**60**
1152	53	52	56	59	59	46	36	28	**61**
1222	53	52	56	59	59	46	36	28	**61**
1262	53	52	56	59	59	46	36	28	**61**
1322	53	52	56	59	59	46	36	28	**61**
1402	53	52	56	59	59	46	36	28	**61**
1503	53	52	56	59	59	46	36	28	**61**
1593	53	52	56	59	59	46	36	28	**61**
1663	53	52	56	59	59	46	36	28	**61**
1773	53	52	56	59	59	46	36	28	**61**
1883	55	54	57	60	60	47	37	29	**62**

Working conditions

Plant (side) cooling exchanger water (in/out) 12,00°C/7,00°C; Source (side) heat exchanger air (in) 35,0°C.

Average sound pressure level at 10m distance, unit in a free field on a reflective surface; non-binding value calculated from the sound power level.

FULL LOAD SOUND LEVEL FX2-G01 /E

SOUND POWER LEVEL IN COOLING									
SIZE	Octave band [Hz]								Total sound level dB(A)
	63	125	250	500	1000	2000	4000	8000	
	Sound power level dB								
0352	89	96	97	96	94	88	81	71	**98**
0402	90	97	98	97	95	89	82	72	**99**
0452	90	97	98	97	95	89	82	72	**99**
0472	90	97	98	97	95	89	82	72	**99**
0572	91	98	99	98	96	90	83	73	**100**
0602	91	98	99	98	96	90	83	73	**100**
0652	92	99	100	99	97	91	84	74	**101**
0702	92	99	100	99	97	91	84	74	**101**
0772	92	99	100	99	97	91	84	74	**101**
0852	92	99	100	99	97	91	84	74	**101**
0902	93	100	101	100	98	92	85	75	**102**
1002	93	100	101	100	98	92	85	75	**102**
1052	94	101	102	101	99	93	86	76	**103**
1152	94	101	102	101	99	93	86	76	**103**
1222	94	101	102	101	99	93	86	76	**103**
1322	94	101	102	101	99	93	86	76	**103**
1402	95	102	103	102	100	94	87	77	**104**

Working conditions

Plant (side) cooling exchanger water (in/out) 12,00°C/7,00°C; Source (side) heat exchanger air (in) 35,0°C.
Sound power on the basis of measurements taken in compliance with ISO 9614.
Such certification refers specifically to the sound Power Level in dB(A). This is therefore the only acoustic data to be considered as binding.
Sound power level in cooling, outdoors.

SOUND PRESSURE LEVEL									
SIZE	Octave band [Hz]								Total sound level dB(A)
	63	125	250	500	1000	2000	4000	8000	
	Sound pressure level dB								
0352	57	64	65	64	62	56	49	39	**66**
0402	58	65	66	65	63	57	50	40	**67**
0452	58	65	66	65	63	57	50	40	**67**
0472	58	65	66	65	63	57	50	40	**67**
0572	58	65	66	65	63	57	50	40	**67**
0602	58	65	66	65	63	57	50	40	**67**
0652	59	66	67	66	64	58	51	41	**68**
0702	59	66	67	66	64	58	51	41	**68**
0772	59	66	67	66	64	58	51	41	**68**
0852	59	66	67	66	64	58	51	41	**68**
0902	60	67	68	67	65	59	52	42	**69**
1002	60	67	68	67	65	59	52	42	**69**
1052	61	68	69	68	66	60	53	43	**70**
1152	61	68	69	68	66	60	53	43	**70**
1222	61	68	69	68	66	60	53	43	**70**
1322	61	68	69	68	66	60	53	43	**70**
1402	62	69	70	69	67	61	54	44	**71**

Working conditions

Plant (side) cooling exchanger water (in/out) 12,00°C/7,00°C; Source (side) heat exchanger air (in) 35,0°C.
Average sound pressure level at 10m distance, unit in a free field on a reflective surface; non-binding value calculated from the sound power level.

FULL LOAD SOUND LEVEL FX2-G01 /SL-E

SOUND POWER LEVEL IN COOLING									
SIZE	Octave band [Hz]								Total sound level dB(A)
	63	125	250	500	1000	2000	4000	8000	
	Sound power level dB								
0352	80	78	81	85	86	77	65	58	**88**
0402	81	79	82	86	87	78	66	59	**89**
0452	81	79	82	86	87	78	66	59	**89**
0472	81	79	82	86	87	78	66	59	**89**
0572	82	81	85	87	88	76	66	58	**90**
0602	84	83	86	88	89	77	67	59	**91**
0652	84	83	86	88	89	77	67	59	**91**
0702	85	84	87	89	90	78	68	60	**92**
0772	85	84	87	89	90	78	68	60	**92**
0852	85	84	87	89	90	78	68	60	**92**
0902	85	84	87	89	90	78	68	60	**92**
1002	85	84	87	89	90	78	68	60	**92**
1052	86	85	88	90	91	79	69	61	**93**
1152	86	85	88	90	91	79	69	61	**93**
1222	86	85	88	90	91	79	69	61	**93**
1322	86	85	88	90	91	79	69	61	**93**
1402	88	87	90	93	93	80	70	62	**95**

Working conditions

Plant (side) cooling exchanger water (in/out) 12,00°C/7,00°C; Source (side) heat exchanger air (in) 35,0°C.
Sound power on the basis of measurements taken in compliance with ISO 9614.
Such certification refers specifically to the sound Power Level in dB(A). This is therefore the only acoustic data to be considered as binding.
Sound power level in cooling, outdoors.

SOUND PRESSURE LEVEL									
SIZE	Octave band [Hz]								Total sound level dB(A)
	63	125	250	500	1000	2000	4000	8000	
	Sound pressure level dB								
0352	48	46	49	53	54	45	33	26	**56**
0402	49	47	50	54	55	46	34	27	**57**
0452	49	47	50	54	55	46	34	27	**57**
0472	49	47	50	54	55	46	34	27	**57**
0572	49	48	52	54	55	43	33	25	**57**
0602	51	50	53	55	56	44	34	26	**58**
0652	51	50	53	55	56	44	34	26	**58**
0702	52	51	54	56	57	45	35	27	**59**
0772	52	51	54	56	57	45	35	27	**59**
0852	52	51	54	56	57	45	35	27	**59**
0902	52	51	54	56	57	45	35	27	**59**
1002	52	51	54	56	57	45	35	27	**59**
1052	53	52	55	57	58	46	36	28	**60**
1152	53	52	55	57	58	46	36	28	**60**
1222	53	52	55	57	58	46	36	28	**60**
1322	53	52	55	57	58	46	36	28	**60**
1402	55	54	57	60	60	47	37	29	**62**

Working conditions

Plant (side) cooling exchanger water (in/out) 12,00°C/7,00°C; Source (side) heat exchanger air (in) 35,0°C.
Average sound pressure level at 10m distance, unit in a free field on a reflective surface; non-binding value calculated from the sound power level.

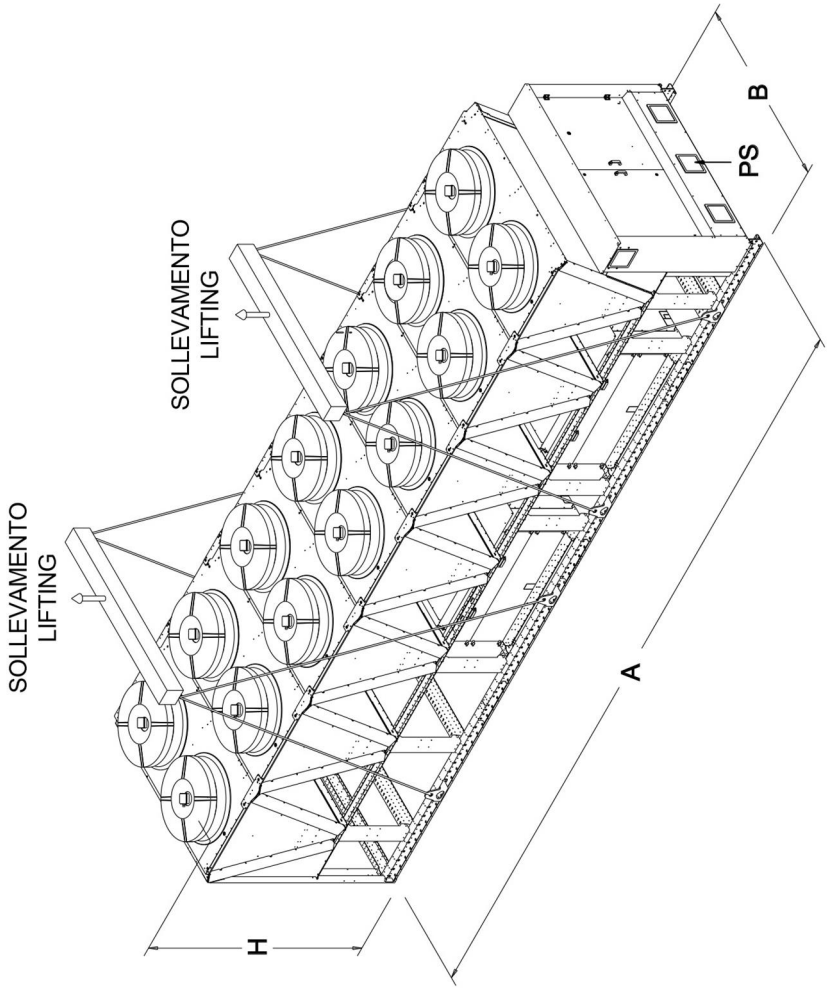

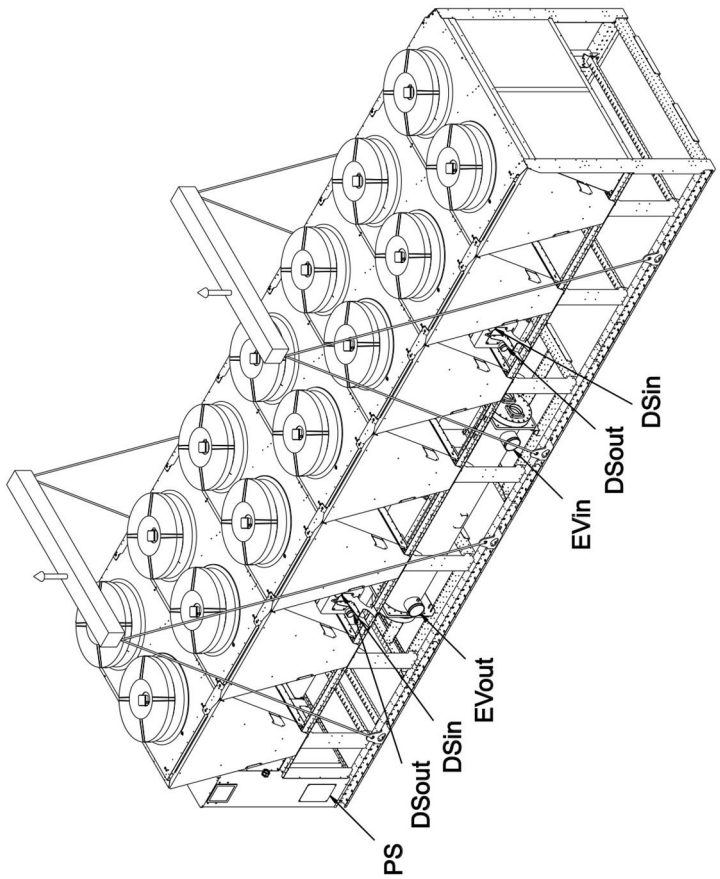

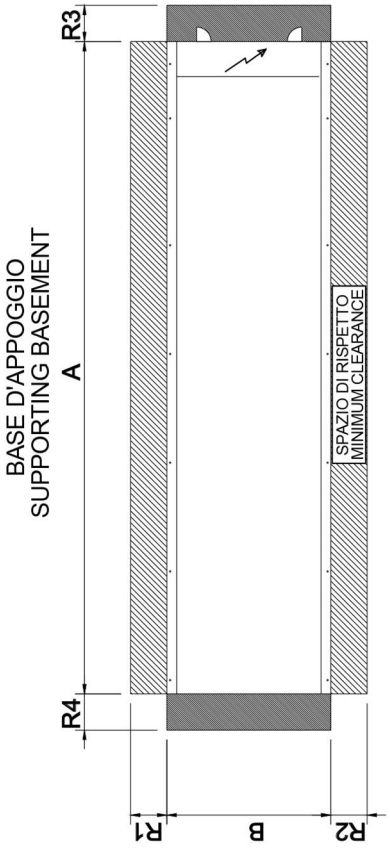

EVin Entrata acqua evaporatore / Evaporator water inlet

EVout Uscita acqua evaporatore / Evaporator water outlet

DSin Entrata acqua desurriscaldatore (solo per versione /D) / Desuperheater water inlet (only for "/D" version)

DSout Uscita acqua desurriscaldatore (solo per versione /D) / Desuperheater water outlet (only for "/D" version)

PS Ingresso linea di alimentazione elettrica / Power supply cable inlet

REMARKS:For installation purposes, please refer to the documentation sent after the purchase-contract. This technical data should be considered as indicative. Mitsubishi Electric Hydronics & IT Cooling Systems S.p.A. may modify them at any moment. Data valid for standard units without any additional option.

DIMENSIONAL DRAWINGS FX2-G01 0322 - 1883

[SI System]

SIZE	DIMENSIONS AND WEIGHTS				CLEARANCE				HEAT EXCHANGER USER SIDE		HEAT RECOVERY EX. USER SIDE	
	A	B	H	WEIGHT	R1	R2	R3	R4	IN/OUT		IN/OUT	
	[mm]	[mm]	[mm]	[kg]	[mm]	[mm]	[mm]	[mm]	TYPE	Ø	TYPE	Ø
FX2-G01 /K /0322	2750	2260	2640	3120	2000	2300	1500	1500	H	5"	-	-
FX2-G01 /K /0352	2750	2260	2640	2950	2000	2300	1500	1500	H	5"	-	-
FX2-G01 /K /0402	4000	2260	2640	3600	2000	2300	1500	1500	H	5"	-	-
FX2-G01 /K /0472	4000	2260	2640	3730	2000	2300	1500	1500	H	5"	-	-
FX2-G01 /K /0512	4000	2260	2640	4570	2000	2300	1500	1500	H	6"	-	-
FX2-G01 /K /0572	5250	2260	2640	5060	2000	2300	1500	1500	H	6"	-	-
FX2-G01 /K /0652	5250	2260	2640	5190	2000	2300	1500	1500	H	6"	-	-
FX2-G01 /K /0702	5250	2260	2640	5550	2000	2300	1500	1500	H	6"	-	-
FX2-G01 /K /0772	6500	2260	2640	6400	2000	2300	1500	1500	H	6"	-	-
FX2-G01 /K /0852	6500	2260	2640	6980	2000	2300	1500	1500	H	6"	-	-
FX2-G01 /K /0902	7750	2260	2640	7460	2000	2300	1500	1500	H	6"	-	-
FX2-G01 /K /1002	7750	2260	2640	7620	2000	2300	1500	1500	H	6"	-	-
FX2-G01 /K /1052	7750	2260	2640	7870	2000	2300	1500	1500	H	8"	-	-
FX2-G01 /K /1102	7750	2260	2640	7900	2000	2300	1500	1500	H	8"	-	-
FX2-G01 /K /1152	9000	2260	2640	8430	2000	2300	1500	1500	H	8"	-	-
FX2-G01 /K /1222	9000	2260	2640	8500	2000	2300	1500	1500	H	8"	-	-
FX2-G01 /K /1262	9150	2260	2640	8860	2000	2300	1500	1500	H	8"	-	-
FX2-G01 /K /1322	10400	2260	2640	9470	2000	2300	1500	1500	H	8"	-	-
FX2-G01 /K /1402	10400	2260	2640	9610	2000	2300	1500	1500	H	8"	-	-
FX2-G01 /K /1503	11650	2260	2640	12050	2000	2300	1500	1500	H	8"	-	-
FX2-G01 /K /1593	11650	2260	2640	12110	2000	2300	1500	1500	H	8"	-	-
FX2-G01 /K /1663	11650	2260	2640	12120	2000	2300	1500	1500	H	8"	-	-
FX2-G01 /K /1773	12900	2260	2640	12710	2000	2300	1500	1500	H	8"	-	-
FX2-G01 /K /1883	12900	2260	2640	12720	2000	2300	1500	1500	H	8"	-	-
FX2-G01 /D /K /0322	2750	2260	2640	3200	2000	2300	1500	1500	H	5"	F1	2"
FX2-G01 /D /K /0352	2750	2260	2640	3030	2000	2300	1500	1500	H	5"	F1	2"
FX2-G01 /D /K /0402	4000	2260	2640	3680	2000	2300	1500	1500	H	5"	F1	2"
FX2-G01 /D /K /0472	4000	2260	2640	3820	2000	2300	1500	1500	H	5"	F1	2"
FX2-G01 /D /K /0512	4000	2260	2640	4650	2000	2300	1500	1500	H	6"	F1	2"
FX2-G01 /D /K /0572	5250	2260	2640	5150	2000	2300	1500	1500	H	6"	F1	2"
FX2-G01 /D /K /0652	5250	2260	2640	5280	2000	2300	1500	1500	H	6"	F1	2"
FX2-G01 /D /K /0702	5250	2260	2640	5640	2000	2300	1500	1500	H	6"	F1	2"
FX2-G01 /D /K /0772	6500	2260	2640	6510	2000	2300	1500	1500	H	6"	F1	2 1/2"
FX2-G01 /D /K /0852	6500	2260	2640	7090	2000	2300	1500	1500	H	6"	F1	2 1/2"
FX2-G01 /D /K /0902	7750	2260	2640	7570	2000	2300	1500	1500	H	6"	F1	2 1/2"
FX2-G01 /D /K /1002	7750	2260	2640	7740	2000	2300	1500	1500	H	6"	F1	2 1/2"
FX2-G01 /D /K /1052	7750	2260	2640	8000	2000	2300	1500	1500	H	8"	F1	2 1/2"
FX2-G01 /D /K /1102	7750	2260	2640	8030	2000	2300	1500	1500	H	8"	F1	2 1/2"
FX2-G01 /D /K /1152	9000	2260	2640	8560	2000	2300	1500	1500	H	8"	F1	2 1/2"
FX2-G01 /D /K /1222	9000	2260	2640	8630	2000	2300	1500	1500	H	8"	F1	2 1/2"
FX2-G01 /D /K /1262	9150	2260	2640	9040	2000	2300	1500	1500	H	8"	J1	2 1/2"
FX2-G01 /D /K /1322	10400	2260	2640	9650	2000	2300	1500	1500	H	8"	J1	2 1/2"
FX2-G01 /D /K /1402	10400	2260	2640	9790	2000	2300	1500	1500	H	8"	J1	2 1/2"
FX2-G01 /D /K /1503	11650	2260	2640	12220	2000	2300	1500	1500	H	8"	F1	2 1/2"
FX2-G01 /D /K /1593	11650	2260	2640	12300	2000	2300	1500	1500	H	8"	F1	2 1/2"
FX2-G01 /D /K /1663	11650	2260	2640	12310	2000	2300	1500	1500	H	8"	F1	2 1/2"
FX2-G01 /D /K /1773	12900	2260	2640	12890	2000	2300	1500	1500	H	8"	F1	2 1/2"
FX2-G01 /D /K /1883	12900	2260	2640	13000	2000	2300	1500	1500	H	8"	J1	2 1/2"
FX2-G01 /SL-K /0322	2750	2260	2640	3380	2000	2300	1500	1500	H	5"	-	-
FX2-G01 /SL-K /0352	4000	2260	2640	3830	2000	2300	1500	1500	H	5"	-	-
FX2-G01 /SL-K /0402	4000	2260	2640	3960	2000	2300	1500	1500	H	5"	-	-
FX2-G01 /SL-K /0472	4000	2260	2640	4000	2000	2300	1500	1500	H	5"	-	-

DIMENSIONAL DRAWINGS FX2-G01 0322 - 1883

[SI System]

SIZE	DIMENSIONS AND WEIGHTS				CLEARANCE				HEAT EXCHANGER USER SIDE		HEAT RECOVERY EX. USER SIDE	
	A	B	H	WEIGHT	R1	R2	R3	R4	IN/OUT		IN/OUT	
	[mm]	[mm]	[mm]	[kg]	[mm]	[mm]	[mm]	[mm]	TYPE	Ø	TYPE	Ø
FX2-G01 /SL-K /0512	5250	2260	2640	5270	2000	2300	1500	1500	H	6"	-	-
FX2-G01 /SL-K /0572	5250	2260	2640	5680	2000	2300	1500	1500	H	6"	-	-
FX2-G01 /SL-K /0652	5250	2260	2640	5720	2000	2300	1500	1500	H	6"	-	-
FX2-G01 /SL-K /0702	6500	2260	2640	6600	2000	2300	1500	1500	H	6"	-	-
FX2-G01 /SL-K /0772	6500	2260	2640	7090	2000	2300	1500	1500	H	6"	-	-
FX2-G01 /SL-K /0852	6500	2260	2640	7590	2000	2300	1500	1500	H	6"	-	-
FX2-G01 /SL-K /0902	7750	2260	2640	8100	2000	2300	1500	1500	H	6"	-	-
FX2-G01 /SL-K /1002	7750	2260	2640	8270	2000	2300	1500	1500	H	6"	-	-
FX2-G01 /SL-K /1052	9000	2260	2640	8920	2000	2300	1500	1500	H	8"	-	-
FX2-G01 /SL-K /1102	9000	2260	2640	9060	2000	2300	1500	1500	H	8"	-	-
FX2-G01 /SL-K /1152	10250	2260	2640	9640	2000	2300	1500	1500	H	8"	-	-
FX2-G01 /SL-K /1222	10250	2260	2640	9710	2000	2300	1500	1500	H	8"	-	-
FX2-G01 /SL-K /1262	10400	2260	2640	10060	2000	2300	1500	1500	H	8"	-	-
FX2-G01 /SL-K /1322	10400	2260	2640	10150	2000	2300	1500	1500	H	8"	-	-
FX2-G01 /SL-K /1402	11650	2260	2640	10720	2000	2300	1500	1500	H	8"	-	-
FX2-G01 /SL-K /1503	11650	2260	2640	12980	2000	2300	1500	1500	H	8"	-	-
FX2-G01 /SL-K /1593	12900	2260	2640	13560	2000	2300	1500	1500	H	8"	-	-
FX2-G01 /SL-K /1663	12900	2260	2640	13560	2000	2300	1500	1500	H	8"	-	-
FX2-G01 /SL-K /1773	12900	2260	2640	13650	2000	2300	1500	1500	H	8"	-	-
FX2-G01 /SL-K /1883	12900	2260	2500	13670	2000	2300	1500	1500	H	8"	-	-
FX2-G01 /D /SL-K /0322	2750	2260	2640	3460	2000	2300	1500	1500	H	5"	F1	2"
FX2-G01 /D /SL-K /0352	4000	2260	2640	3910	2000	2300	1500	1500	H	5"	F1	2"
FX2-G01 /D /SL-K /0402	4000	2260	2640	4040	2000	2300	1500	1500	H	5"	F1	2"
FX2-G01 /D /SL-K /0472	4000	2260	2640	4090	2000	2300	1500	1500	H	5"	F1	2"
FX2-G01 /D /SL-K /0512	5250	2260	2640	5350	2000	2300	1500	1500	H	6"	F1	2"
FX2-G01 /D /SL-K /0572	5250	2260	2640	5770	2000	2300	1500	1500	H	6"	F1	2"
FX2-G01 /D /SL-K /0652	5250	2260	2640	5810	2000	2300	1500	1500	H	6"	F1	2"
FX2-G01 /D /SL-K /0702	6500	2260	2640	6690	2000	2300	1500	1500	H	6"	F1	2"
FX2-G01 /D /SL-K /0772	6500	2260	2640	7180	2000	2300	1500	1500	H	6"	F1	2 1/2"
FX2-G01 /D /SL-K /0852	6500	2260	2640	7700	2000	2300	1500	1500	H	6"	F1	2 1/2"
FX2-G01 /D /SL-K /0902	7750	2260	2640	8210	2000	2300	1500	1500	H	6"	F1	2 1/2"
FX2-G01 /D /SL-K /1002	7750	2260	2640	8380	2000	2300	1500	1500	H	6"	F1	2 1/2"
FX2-G01 /D /SL-K /1052	9000	2260	2640	9030	2000	2300	1500	1500	H	8"	F1	2 1/2"
FX2-G01 /D /SL-K /1102	9000	2260	2640	9190	2000	2300	1500	1500	H	8"	F1	2 1/2"
FX2-G01 /D /SL-K /1152	10250	2260	2640	9770	2000	2300	1500	1500	H	8"	F1	2 1/2"
FX2-G01 /D /SL-K /1222	10250	2260	2640	9840	2000	2300	1500	1500	H	8"	F1	2 1/2"
FX2-G01 /D /SL-K /1262	10400	2260	2640	10240	2000	2300	1500	1500	H	8"	J1	2 1/2"
FX2-G01 /D /SL-K /1322	10400	2260	2640	10330	2000	2300	1500	1500	H	8"	J1	2 1/2"
FX2-G01 /D /SL-K /1402	11650	2260	2640	10900	2000	2300	1500	1500	H	8"	J1	2 1/2"
FX2-G01 /D /SL-K /1503	11650	2260	2640	13150	2000	2300	1500	1500	H	8"	F1	2 1/2"
FX2-G01 /D /SL-K /1593	12900	2260	2640	13720	2000	2300	1500	1500	H	8"	F1	2 1/2"
FX2-G01 /D /SL-K /1663	12900	2260	2640	13750	2000	2300	1500	1500	H	8"	F1	2 1/2"
FX2-G01 /D /SL-K /1773	12900	2260	2640	13840	2000	2300	1500	1500	H	8"	F1	2 1/2"
FX2-G01 /D /SL-K /1883	12900	2260	2640	13950	2000	2300	1500	1500	H	8"	J1	2 1/2"
FX2-G01 /E /0352	4000	2260	2640	3660	2000	2300	1500	1500	H	5"	-	-
FX2-G01 /E /0402	5250	2260	2640	4270	2000	2300	1500	1500	H	5"	-	-
FX2-G01 /E /0452	5250	2260	2640	4390	2000	2300	1500	1500	H	6"	-	-
FX2-G01 /E /0472	5250	2260	2640	4440	2000	2300	1500	1500	H	6"	-	-
FX2-G01 /E /0572	6500	2260	2640	5660	2000	2300	1500	1500	H	6"	-	-
FX2-G01 /E /0602	6500	2260	2640	5960	2000	2300	1500	1500	H	6"	-	-
FX2-G01 /E /0652	7750	2260	2640	6420	2000	2300	1500	1500	H	6"	-	-
FX2-G01 /E /0702	7750	2260	2640	6550	2000	2300	1500	1500	H	6"	-	-

DIMENSIONAL DRAWINGS FX2-G01 0322 - 1883

[SI System]

SIZE	DIMENSIONS AND WEIGHTS				CLEARANCE				HEAT EXCHANGER USER SIDE		HEAT RECOVERY EX. USER SIDE	
	A	B	H	WEIGHT	R1	R2	R3	R4	IN/OUT		IN/OUT	
	[mm]	[mm]	[mm]	[kg]	[mm]	[mm]	[mm]	[mm]	TYPE	Ø	TYPE	Ø
FX2-G01 /E /0772	7750	2260	2640	6640	2000	2300	1500	1500	H	6"	-	-
FX2-G01 /E /0852	9000	2260	2640	7530	2000	2300	1500	1500	H	6"	-	-
FX2-G01 /E /0902	9000	2260	2640	8060	2000	2300	1500	1500	H	6"	-	-
FX2-G01 /E /1002	10250	2260	2640	8570	2000	2300	1500	1500	H	6"	-	-
FX2-G01 /E /1052	10250	2260	2640	8920	2000	2300	1500	1500	H	8"	-	-
FX2-G01 /E /1152	11650	2260	2640	9430	2000	2300	1500	1500	H	8"	-	-
FX2-G01 /E /1222	11650	2260	2640	9550	2000	2300	1500	1500	H	8"	-	-
FX2-G01 /E /1322	11650	2260	2640	10490	2000	2300	1500	1500	H	8"	-	-
FX2-G01 /E /1402	12900	2260	2640	11150	2000	2300	1500	1500	H	8"	-	-
FX2-G01 /D /E /0352	4000	2260	2640	3740	2000	2300	1500	1500	H	5"	F1	2"
FX2-G01 /D /E /0402	5250	2260	2640	4350	2000	2300	1500	1500	H	5"	F1	2"
FX2-G01 /D /E /0452	5250	2260	2640	4470	2000	2300	1500	1500	H	6"	F1	2"
FX2-G01 /D /E /0472	5250	2260	2640	4530	2000	2300	1500	1500	H	6"	F1	2"
FX2-G01 /D /E /0572	6500	2260	2640	5740	2000	2300	1500	1500	H	6"	F1	2"
FX2-G01 /D /E /0602	6500	2260	2640	6040	2000	2300	1500	1500	H	6"	F1	2"
FX2-G01 /D /E /0652	7750	2260	2640	6510	2000	2300	1500	1500	H	6"	F1	2"
FX2-G01 /D /E /0702	7750	2260	2640	6640	2000	2300	1500	1500	H	6"	F1	2"
FX2-G01 /D /E /0772	7750	2260	2640	6730	2000	2300	1500	1500	H	6"	F1	2"
FX2-G01 /D /E /0852	9000	2260	2640	7640	2000	2300	1500	1500	H	6"	F1	2 1/2"
FX2-G01 /D /E /0902	9000	2260	2640	8170	2000	2300	1500	1500	H	6"	F1	2 1/2"
FX2-G01 /D /E /1002	10250	2260	2640	8680	2000	2300	1500	1500	H	6"	F1	2 1/2"
FX2-G01 /D /E /1052	10250	2260	2640	9030	2000	2300	1500	1500	H	8"	F1	2 1/2"
FX2-G01 /D /E /1152	11650	2260	2640	9550	2000	2300	1500	1500	H	8"	F1	2 1/2"
FX2-G01 /D /E /1222	11650	2260	2640	9670	2000	2300	1500	1500	H	8"	F1	2 1/2"
FX2-G01 /D /E /1322	11650	2260	2640	10610	2000	2300	1500	1500	H	8"	F1	2 1/2"
FX2-G01 /D /E /1402	12900	2260	2640	11340	1500	2300	1500	1500	H	8"	J1	2 1/2"
FX2-G01 /SL-E /0352	4000	2260	2640	3930	2000	2300	1500	1500	H	5"	-	-
FX2-G01 /SL-E /0402	5250	2260	2640	4540	2000	2300	1500	1500	H	5"	-	-
FX2-G01 /SL-E /0452	5250	2260	2640	4660	2000	2300	1500	1500	H	6"	-	-
FX2-G01 /SL-E /0472	5250	2260	2640	4720	2000	2300	1500	1500	H	6"	-	-
FX2-G01 /SL-E /0572	6500	2260	2640	6200	2000	2300	1500	1500	H	6"	-	-
FX2-G01 /SL-E /0602	6500	2260	2640	6500	2000	2300	1500	1500	H	6"	-	-
FX2-G01 /SL-E /0652	7750	2260	2640	6960	2000	2300	1500	1500	H	6"	-	-
FX2-G01 /SL-E /0702	7750	2260	2640	7100	2000	2300	1500	1500	H	6"	-	-
FX2-G01 /SL-E /0772	7750	2260	2640	7190	2000	2300	1500	1500	H	6"	-	-
FX2-G01 /SL-E /0852	9000	2260	2640	8120	2000	2300	1500	1500	H	6"	-	-
FX2-G01 /SL-E /0902	9000	2260	2640	8690	2000	2300	1500	1500	H	6"	-	-
FX2-G01 /SL-E /1002	10250	2260	2640	9210	2000	2300	1500	1500	H	6"	-	-
FX2-G01 /SL-E /1052	10250	2260	2640	9560	2000	2300	1500	1500	H	8"	-	-
FX2-G01 /SL-E /1152	11650	2260	2640	10080	2000	2300	1500	1500	H	8"	-	-
FX2-G01 /SL-E /1222	11650	2260	2640	10200	2000	2300	1500	1500	H	8"	-	-
FX2-G01 /SL-E /1322	11650	2260	2640	11140	2000	2300	1500	1500	H	8"	-	-
FX2-G01 /SL-E /1402	12900	2260	2640	11810	2000	2300	1500	1500	H	8"	-	-
FX2-G01 /D /SL-E /0352	4000	2260	2640	4010	2000	2300	1500	1500	H	5"	F1	2"
FX2-G01 /D /SL-E /0402	5250	2260	2640	4620	2000	2300	1500	1500	H	5"	F1	2"
FX2-G01 /D /SL-E /0452	5250	2260	2640	4740	2000	2300	1500	1500	H	6"	F1	2"
FX2-G01 /D /SL-E /0472	5250	2260	2640	4800	2000	2300	1500	1500	H	6"	F1	2"
FX2-G01 /D /SL-E /0572	6500	2260	2640	6280	2000	2300	1500	1500	H	6"	F1	2"
FX2-G01 /D /SL-E /0602	6500	2260	2640	6580	2000	2300	1500	1500	H	6"	F1	2"
FX2-G01 /D /SL-E /0652	7750	2260	2640	7050	2000	2300	1500	1500	H	6"	F1	2"
FX2-G01 /D /SL-E /0702	7750	2260	2640	7190	2000	2300	1500	1500	H	6"	F1	2"
FX2-G01 /D /SL-E /0772	7750	2260	2640	7280	2000	2300	1500	1500	H	6"	F1	2"

DIMENSIONAL DRAWINGS FX2-G01 0322 - 1883

[SI System]

SIZE	DIMENSIONS AND WEIGHTS				CLEARANCE				HEAT EXCHANGER USER SIDE		HEAT RECOVERY EX. USER SIDE	
	A	B	H	WEIGHT	R1	R2	R3	R4	IN/OUT		IN/OUT	
	[mm]	[mm]	[mm]	[kg]	[mm]	[mm]	[mm]	[mm]	TYPE	Ø	TYPE	Ø
FX2-G01 /D /SL-E /0852	9000	2260	2640	8210	2000	2300	1500	1500	H	6"	F1	2 1/2"
FX2-G01 /D /SL-E /0902	9000	2260	2640	8800	2000	2300	1500	1500	H	6"	F1	2 1/2"
FX2-G01 /D /SL-E /1002	10250	2260	2640	9320	2000	2300	1500	1500	H	6"	F1	2 1/2"
FX2-G01 /D /SL-E /1052	10250	2260	2640	9670	2000	2300	1500	1500	H	8"	F1	2 1/2"
FX2-G01 /D /SL-E /1152	11650	2260	2640	10190	2000	2300	1500	1500	H	8"	F1	2 1/2"
FX2-G01 /D /SL-E /1222	11650	2260	2640	10330	2000	2300	1500	1500	H	8"	F1	2 1/2"
FX2-G01 /D /SL-E /1322	11650	2260	2640	11270	2000	2300	1500	1500	H	8"	F1	2 1/2"
FX2-G01 /D /SL-E /1402	12900	2260	2640	12000	2000	2300	1500	1500	H	8"	J1	2 1/2"

DIMENSIONAL DRAWINGS

LEGEND OF PIPE CONNECTIONS

TYPE = F
Grooved coupling with male threaded counter-pipe user side

TYPE = H
Grooved coupling with weld end counter-pipe user side

NOMINAL PIPE SIZE	PIPE OUTSIDE DIAMETER
ø inches	**ø mm**
¾	26,7
1	33,7
1 ¼	42,4
1 ½	48,3
2	60,3
2 ½	76,1
3	88,9
3 ½	101,6

NOMINAL PIPE SIZE	PIPE OUTSIDE DIAMETER
ø inches	**ø mm**
4	114,3
4 ½	127,0
5	139,7
6	168,3
8	219,1
10	273,0
12	323,9
14	355,6

UNI ISO 228/13
Pipe threads where pressure-tight joints are not made on the threads - Designation, dimensions and tolerances
Used terminology:
G: Pipe threads where pressure-tight joints are not made on the threads
A: Close tolerance class for external pipe threads where pressure-tight joints are not made on the threads
B: Wider tolerance class for external pipe threads where pressure-tight joints are not made on the threads
Internal threads: G letter followed by thread mark (only tolerance class)
External threads: G letter followed by thread mark and by A letter for A class external threads or by B letter for B class external threads.

UNI EN 10226-1
Pipe threads where pressure-tight joints are made on the threads - Designation, dimensions and tolerances
Used terminology:
Rp: Internal cylindrical threads where pressure-tight joints are made on the threads
Rc: Internal conical threads where pressure-tight joints are made on the threads
R: External conical threads where pressure-tight joints are made on the threads
Internal cylindrical threads: R letter followed by p letter
Internal conical threads: R letter followed by c letter
External conical threads: R letter

DESIGNATION	DESCRIPTION
UNI EN 10226-1 - Rp 1 1/2	Internal cylindrical threads where pressure-tight joints are made on the threads, defined by standard UNI ISO 7/1 Conventional ø 1 1/2”
UNI EN 10226-1 - Rp 2 1/2	Internal cylindrical threads where pressure-tight joints are made on the threads, defined by standard UNI ISO 7/1 Conventional ø 2 1/2”
UNI EN 10226-1 - Rp 3	Internal cylindrical threads where pressure-tight joints are made on the threads, defined by standard UNI ISO 7/1 Conventional ø 3”
UNI EN 10226-1 - R 3	External conical threads where pressure-tight joints are made on the threads, defined by standard UNI ISO 7/1 Conventional ø 3”
UNI ISO 228/1 - G 4 B	Internal cylindrical threads where pressure-tight joints are not made on the threads, defined by standard UNI ISO 228/1 Tolerance class B for external thread Conventional ø 4”
DN 80 PN 16	Flange Nominal Diameter: 80 mm Nominal Pressure: 16 bar

NOTE:
Conventional diameter value [in inches] identifies short thread designation, based upon the relative standard.
All relative values are defined by standards.
As example, here below some values:

	UNI EN 10226-1	UNI ISO 228/1
Conventional ø	1”	1”
Pitch	2.309 mm	2.309 mm
External ø	33.249 mm	33.249 mm
Core ø	30.291 mm	30.291 mm
Thread height	1.479 mm	1.479 mm

12.1 HYDRONIC GROUP

12.1 HYDRONIC MODULE
The units can be fitted with the hydronic module includes the main water circuit components, thus optimizing water circuit and electrical installation space, times and costs.
The built-in hydronic module is available as option with twin in-line pump, for achieving low head or high head, fixed or variable speed.

The standard configuration of the units feature:
- Terminals for external pumps control (relays + 0-10V signal)
- Differential pressure switch (on heat exchanger)
- discharge valves on exchanger
- purge valve

For the hydronic modules with pumps, the factory-mounted components are:
- 2 pumps, 2 poles low head (4 poles for version K, SL-K, sizes from 1593 to 1883) or 2 poles high head, fixed speed or variable speed (inverter)
- Pump suction and discharge valves
- One-way valve (Clapet type for in-line pumps)
- Purge valve
- Drain plug
- Differential pressure switch (on heat exchanger)
- Drain valve (on heat exchanger)

The second pump operates in stand-by to the first.
The relative operating hours of the two pumps are balanced. In case the operating pump breaks down, the reserve pump is automatically enabled.
The electrical panel of the unit is protected with fuses and contactors with thermals cut-out.

Suction, volute and discharge of each pump and all the water pipes are covered with an insulation lining in closed-cell reticulated foam in PE of 15 mm.

The hydronic group is protected by a self-ventilated enclosure. In silenced units (/SL versions and units with Noise Reducer (code 2315)), the enclosure is acoustically insulated by a 30 mm thick lining of polyester fibers (Fiberform).
Note: the use of 2 pole pumps in super low noise units (/SL versions) increases the sound power by 1 dB(A).

12.1 IN-LINE PUMPS
Low or high head pumps
Grundfos single-stage, close-coupled, volute twin-head pump with in-line suction and discharge ports. The pump housing and the impeller are made of cast iron, with optimized design to improve the efficiency. The twin-head pumps are designed with two parallel power heads. Each power head is fitted with a fan-cooled asynchronous motor of identical size. Motor and pump shafts are connected via a rigid two-part coupling. The pumps are of the top-pull-out design, i.e. you can remove the power head (motor, pump head and impeller) for maintenance or service while the pump housing remains in the pipework.
Pump housing and pump head are electrocoated to improve the corrosion resistance. The flanges have tappings for mounting of pressure gauges. The central part of the motor stool is provided with guards for protection against the shaft and coupling.
The shaft seal is in accordance with EN 12756. Pipework connection is via PN 16 DIN flanges (EN 1092-2 and ISO 7005-2).
The pump is fitted with an unbalanced rubber bellows seal with torque transmission across the spring and around the bellows. Due to the bellows, the seal does not wear the shaft, and the axial movement is not prevented by deposits on the shaft.
Primary seal:
- Rotating seal ring material: Silicon carbide (SiC)
- Stationary seat material: Silicon carbide (SiC)

This material pairing is used where higher corrosion resistance is required. The high hardness of this material pairing offers good resistance against abrasive particles.
Secondary seal material: EPDM (ethylene-propylene rubber). EPDM has excellent resistance to hot water.
A circulation of liquid through the duct of the air vent screw ensures lubrication and cooling of the shaft seal.
The twin-head pumps are connected in parallel. A non-return flap valve in the common outlet port is opened by the flow of the pumped liquid and prevents backflow of liquid into the idle pump head. The pump housing is provided with a replaceable bronze neck ring to reduce the amount of liquid running from the discharge side of the impeller to the suction side.
The pumps are fitted with high efficiency motors classified as IE3 in accordance with IEC 60034-30. The fan-cooled motors are totally enclosed, with main dimensions to IEC and DIN standards. Electrical tolerances comply with IEC 60034. Insulation class F (IEC 85). These motors show high efficiency, thus minimizing the energy consumption. The motor can be drived via a variable frequency drive for variable speed operation.

12.2 VARIABLE FREQUENCY DRIVE
For pump speed control
Mitsubishi Electric frequency converters, with IP55 protection rating for rough environment. The drives, one for each pump, are cooled by built-in fans and installed with a dedicated enclosure.
The fast-response speed control combined with the advanced auto-tuning function ensures safe and accurate operation in any condition.
Optimum control of the excitation current maximizes motor efficiency for additional energy savings.
The drive features built-in EMC filter (EN 61800-3, 1st Environment, Category C2) and DC link choke to significantly reduce electromagnetic noise and current harmonic distortion THDi.

12.2 OTHER COMPONENTS
The following components are excluded from the hydronic kit supply, but their use is mandatory for the correct unit and system operation.
These components are available as accessories and supplied loose, it shall be the customer responsability to install them.
- Unit inlet water filter
- Unit outlet flow-switch

It is also recommended the use of the following components:
- Unit inlet and outlet pressure gauges
- Shut-off valves
- Flexible joints on piping

Possible configurations

PUMP GROUP	Versions			
	E	K	SL-E	SL-K
HYDRONIC KIT 2 PUMPS 4 POLES LH(4708)	n.a.	X	n.a.	X
HYDRONIC KIT 2 PUMPS 2 POLES LH(4711)	X	X	X	X
HYDRONIC KIT 2 PUMPS 2P HH(4712)	X	X	X	X

PUMP GROUP	Versions			
	E	K	SL-E	SL-K
2 PUMPS 4 POLES LH + VPF(4719)	n.a.	X	n.a.	X
2 PUMPS 2 POLES LH + VPF(4722)	X	X	X	X
2 PUMPS 2 POLES HH + VPF(4723)	X	X	X	X

UNITA' CON KIT IDRONICO
UNITS WITH HYDRONIC GROUP

KIT IDRONICO SU PROLUNGAMENTO STRUTTURA - POMPE IN-LINE
HYDRONIC KIT ON FRAME EXTENSION - IN-LINE PUMPS

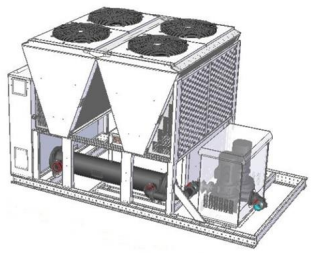

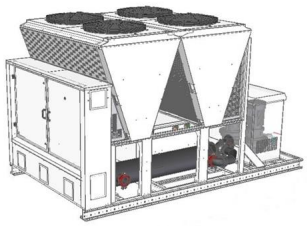

- L'immagine è puramente indicativa.
- Pictures shown are for illustration purpose only.

KIT IDRONICO INTERNO - POMPE IN-LINE
INTERNAL HYDRONIC KIT - IN-LINE PUMPS

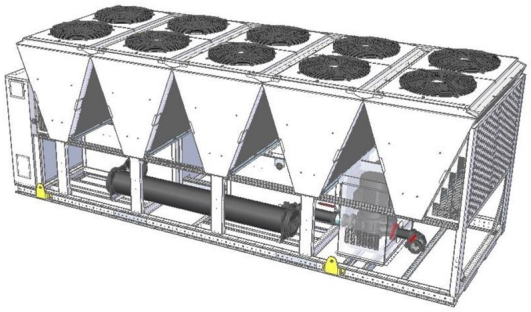

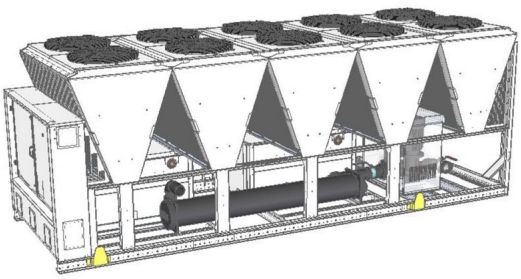

- L'immagine è puramente indicativa.
- Pictures shown are for illustration purpose only.

Schema idraulico pompe IN-LINE - configurazione STD
Hydraulic diagram IN-LINE water PUMPS – STD configuration

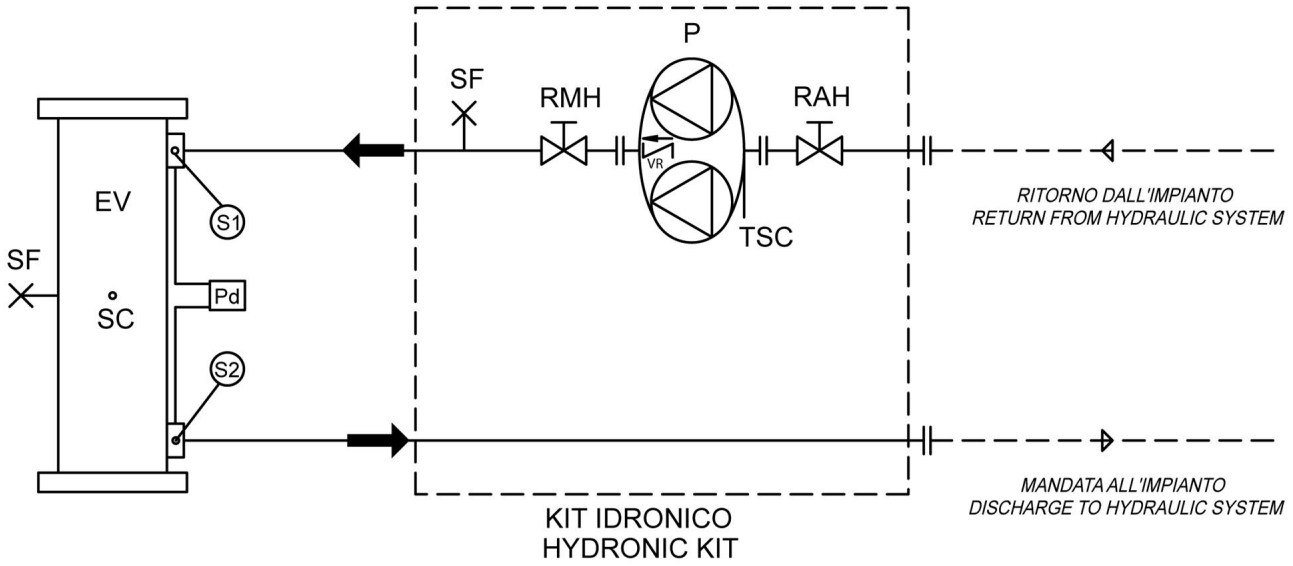

LEGENDA - LEGEND	
COMPONENTI DEL KIT IDRONICO *COMPONENTS OF THE HYDRONIC KIT*	
EV	Evaporatore (scambiatore a fascio tubiero) Evaporator (tube exchanger)
P	Pompa gemellare Twin rotor pump
Pd	Pressostato differenziale lato acqua Water Differential pressure switch
RAH	Rubinetto aspirazione Pump suction valve
RMH	Rubinetto mandata Pump discharge valve
SC	Valvola di scarico Drain valve
TSC	Tappo di scarico Drain plug
SF	Valvola di sfiato Purge valve
S1	Sonda ingresso acqua scambiatore Exchanger water inlet probe
S2	Sonda uscita acqua scambiatore Exchanger water outlet probe
VR	Valvola di non ritorno (interna alla pompa) One way valve (pump inside)

HYDRONIC GROUP

Hydronic kit positioning

	Version	HYDRONIC KIT 2 PUMPS 4 POLES LH (4708)				HYDRONIC KIT 2 PUMPS 2 POLES LH (4711)				HYDRONIC KIT 2 PUMPS 2P HH (4712)				2 PUMPS 4 POLES LH + VPF (4719)			
		extra L [mm]	extra W [mm]	extra H [mm]	extra WGT [kg]	extra L [mm]	extra W [mm]	extra H [mm]	extra WGT [kg]	extra L [mm]	extra W [mm]	extra H [mm]	extra WGT [kg]	extra L [mm]	extra W [mm]	extra H [mm]	extra WGT [kg]
0322	K	n.a.	n.a.	n.a.	n.a.	1250	/	/	430	1250	/	/	490	n.a.	n.a.	n.a.	n.a.
	SL-K	n.a.	n.a.	n.a.	n.a.	1250	/	/	430	1250	/	/	480	n.a.	n.a.	n.a.	n.a.
0352	E	n.a.	n.a.	n.a.	n.a.	/	/	/	370	/	/	/	420	n.a.	n.a.	n.a.	n.a.
	K	n.a.	n.a.	n.a.	n.a.	1250	/	/	430	1250	/	/	480	n.a.	n.a.	n.a.	n.a.
	SL-E	n.a.	n.a.	n.a.	n.a.	/	/	/	370	/	/	/	420	n.a.	n.a.	n.a.	n.a.
	SL-K	n.a.	n.a.	n.a.	n.a.	/	/	/	370	/	/	/	430	n.a.	n.a.	n.a.	n.a.
0402	E	n.a.	n.a.	n.a.	n.a.	/	/	/	400	/	/	/	450	n.a.	n.a.	n.a.	n.a.
	K	n.a.	n.a.	n.a.	n.a.	/	/	/	450	/	/	/	430	n.a.	n.a.	n.a.	n.a.
	SL-E	n.a.	n.a.	n.a.	n.a.	/	/	/	400	/	/	/	460	n.a.	n.a.	n.a.	n.a.
	SL-K	n.a.	n.a.	n.a.	n.a.	/	/	/	450	/	/	/	430	n.a.	n.a.	n.a.	n.a.
0452	E	n.a.	n.a.	n.a.	n.a.	/	/	/	470	/	/	/	440	n.a.	n.a.	n.a.	n.a.
	SL-E	n.a.	n.a.	n.a.	n.a.	/	/	/	470	/	/	/	450	n.a.	n.a.	n.a.	n.a.
0472	E	n.a.	n.a.	n.a.	n.a.	/	/	/	490	/	/	/	570	n.a.	n.a.	n.a.	n.a.
	K	n.a.	n.a.	n.a.	n.a.	/	/	/	450	/	/	/	570	n.a.	n.a.	n.a.	n.a.
	SL-E	n.a.	n.a.	n.a.	n.a.	/	/	/	490	/	/	/	560	n.a.	n.a.	n.a.	n.a.
	SL-K	n.a.	n.a.	n.a.	n.a.	/	/	/	450	/	/	/	570	n.a.	n.a.	n.a.	n.a.
0512	K	n.a.	n.a.	n.a.	n.a.	1250	/	/	540	1250	/	/	620	n.a.	n.a.	n.a.	n.a.
	SL-K	n.a.	n.a.	n.a.	n.a.	1250	/	/	540	1250	/	/	610	n.a.	n.a.	n.a.	n.a.
0572	E	n.a.	n.a.	n.a.	n.a.	/	/	/	450	/	/	/	550	n.a.	n.a.	n.a.	n.a.
	K	n.a.	n.a.	n.a.	n.a.	1250	/	/	540	1250	/	/	620	n.a.	n.a.	n.a.	n.a.
	SL-E	n.a.	n.a.	n.a.	n.a.	/	/	/	450	/	/	/	550	n.a.	n.a.	n.a.	n.a.
	SL-K	n.a.	n.a.	n.a.	n.a.	1250	/	/	550	1250	/	/	620	n.a.	n.a.	n.a.	n.a.
0602	E	n.a.	n.a.	n.a.	n.a.	/	/	/	610	/	/	/	550	n.a.	n.a.	n.a.	n.a.
	SL-E	n.a.	n.a.	n.a.	n.a.	/	/	/	610	/	/	/	550	n.a.	n.a.	n.a.	n.a.
0652	E	n.a.	n.a.	n.a.	n.a.	150	/	/	750	150	/	/	920	n.a.	n.a.	n.a.	n.a.
	K	n.a.	n.a.	n.a.	n.a.	1250	/	/	720	1250	/	/	700	n.a.	n.a.	n.a.	n.a.
	SL-E	n.a.	n.a.	n.a.	n.a.	150	/	/	760	150	/	/	930	n.a.	n.a.	n.a.	n.a.
	SL-K	n.a.	n.a.	n.a.	n.a.	1250	/	/	730	1250	/	/	710	n.a.	n.a.	n.a.	n.a.
0702	E	n.a.	n.a.	n.a.	n.a.	150	/	/	880	150	/	/	920	n.a.	n.a.	n.a.	n.a.
	K	n.a.	n.a.	n.a.	n.a.	1250	/	/	850	1250	/	/	710	n.a.	n.a.	n.a.	n.a.
	SL-E	n.a.	n.a.	n.a.	n.a.	150	/	/	880	150	/	/	920	n.a.	n.a.	n.a.	n.a.
	SL-K	n.a.	n.a.	n.a.	n.a.	/	/	/	780	/	/	/	680	n.a.	n.a.	n.a.	n.a.
0772	E	n.a.	n.a.	n.a.	n.a.	150	/	/	880	150	/	/	980	n.a.	n.a.	n.a.	n.a.
	K	n.a.	n.a.	n.a.	n.a.	1250	/	/	830	1250	/	/	720	n.a.	n.a.	n.a.	n.a.
	SL-E	n.a.	n.a.	n.a.	n.a.	150	/	/	880	150	/	/	970	n.a.	n.a.	n.a.	n.a.
	SL-K	n.a.	n.a.	n.a.	n.a.	1250	/	/	830	1250	/	/	710	n.a.	n.a.	n.a.	n.a.
0852	E	n.a.	n.a.	n.a.	n.a.	/	/	/	750	/	/	/	890	n.a.	n.a.	n.a.	n.a.
	K	n.a.	n.a.	n.a.	n.a.	1250	/	/	860	1250	/	/	750	n.a.	n.a.	n.a.	n.a.
	SL-E	n.a.	n.a.	n.a.	n.a.	/	/	/	750	/	/	/	890	n.a.	n.a.	n.a.	n.a.
	SL-K	n.a.	n.a.	n.a.	n.a.	1250	/	/	870	1250	/	/	760	n.a.	n.a.	n.a.	n.a.
0902	E	n.a.	n.a.	n.a.	n.a.	/	/	/	750	/	/	/	890	n.a.	n.a.	n.a.	n.a.

extra L	Unit's extra length
extra W	Unit's extra operating width (NOT to be considered for transport)
extra H	Unit's extra height
extra WGT	Unit's extra weight (pumps and piping)
HYDRONIC KIT 2 PUMPS 4 POLES LH	HYDRONIC KIT 2 PUMPS 4 POLES LH
HYDRONIC KIT 2 PUMPS 2 POLES LH	HYDRONIC KIT 2 PUMPS 2 POLES LH
HYDRONIC KIT 2 PUMPS 2P HH	HYDRONIC KIT 2 PUMPS 2P HH
2 PUMPS 4 POLES LH + VPF	2 PUMPS 4 POLES LH + VPF
-	Not available

HYDRONIC GROUP

Hydronic kit positioning

	Version	HYDRONIC KIT 2 PUMPS 4 POLES LH (4708)				HYDRONIC KIT 2 PUMPS 2 POLES LH (4711)				HYDRONIC KIT 2 PUMPS 2P HH (4712)				2 PUMPS 4 POLES LH + VPF (4719)			
		extra L [mm]	extra W [mm]	extra H [mm]	extra WGT [kg]	extra L [mm]	extra W [mm]	extra H [mm]	extra WGT [kg]	extra L [mm]	extra W [mm]	extra H [mm]	extra WGT [kg]	extra L [mm]	extra W [mm]	extra H [mm]	extra WGT [kg]
0902	K	n.a.	n.a.	n.a.	n.a.	150	/	/	810	150	/	/	940	n.a.	n.a.	n.a.	n.a.
	SL-E	n.a.	n.a.	n.a.	n.a.	/	/	/	750	/	/	/	900	n.a.	n.a.	n.a.	n.a.
	SL-K	n.a.	n.a.	n.a.	n.a.	150	/	/	810	150	/	/	940	n.a.	n.a.	n.a.	n.a.
1002	E	n.a.	n.a.	n.a.	n.a.	/	/	/	760	/	/	/	860	n.a.	n.a.	n.a.	n.a.
	K	n.a.	n.a.	n.a.	n.a.	150	/	/	880	150	/	/	940	n.a.	n.a.	n.a.	n.a.
	SL-E	n.a.	n.a.	n.a.	n.a.	/	/	/	760	/	/	/	860	n.a.	n.a.	n.a.	n.a.
	SL-K	n.a.	n.a.	n.a.	n.a.	150	/	/	870	150	/	/	940	n.a.	n.a.	n.a.	n.a.
1052	E	n.a.	n.a.	n.a.	n.a.	/	/	/	880	/	/	/	920	n.a.	n.a.	n.a.	n.a.
	K	n.a.	n.a.	n.a.	n.a.	150	/	/	860	150	/	/	890	n.a.	n.a.	n.a.	n.a.
	SL-E	n.a.	n.a.	n.a.	n.a.	/	/	/	880	/	/	/	910	n.a.	n.a.	n.a.	n.a.
	SL-K	n.a.	n.a.	n.a.	n.a.	/	/	/	850	/	/	/	920	n.a.	n.a.	n.a.	n.a.
1102	K	n.a.	n.a.	n.a.	n.a.	150	/	/	860	150	/	/	900	n.a.	n.a.	n.a.	n.a.
	SL-K	n.a.	n.a.	n.a.	n.a.	/	/	/	850	/	/	/	920	n.a.	n.a.	n.a.	n.a.
1152	E	n.a.	n.a.	n.a.	n.a.	150	/	/	860	150	/	/	980	n.a.	n.a.	n.a.	n.a.
	K	n.a.	n.a.	n.a.	n.a.	/	/	/	860	/	/	/	970	n.a.	n.a.	n.a.	n.a.
	SL-E	n.a.	n.a.	n.a.	n.a.	150	/	/	850	150	/	/	980	n.a.	n.a.	n.a.	n.a.
	SL-K	n.a.	n.a.	n.a.	n.a.	/	/	/	850	/	/	/	970	n.a.	n.a.	n.a.	n.a.
1222	E	n.a.	n.a.	n.a.	n.a.	150	/	/	860	150	/	/	980	n.a.	n.a.	n.a.	n.a.
	K	n.a.	n.a.	n.a.	n.a.	/	/	/	920	/	/	/	970	n.a.	n.a.	n.a.	n.a.
	SL-E	n.a.	n.a.	n.a.	n.a.	150	/	/	860	150	/	/	980	n.a.	n.a.	n.a.	n.a.
	SL-K	n.a.	n.a.	n.a.	n.a.	/	/	/	920	/	/	/	970	n.a.	n.a.	n.a.	n.a.
1262	K	n.a.	n.a.	n.a.	n.a.	/	/	/	900	/	/	/	920	n.a.	n.a.	n.a.	n.a.
	SL-K	n.a.	n.a.	n.a.	n.a.	/	/	/	980	/	/	/	1000	n.a.	n.a.	n.a.	n.a.
1322	E	n.a.	n.a.	n.a.	n.a.	150	/	/	880	150	/	/	1020	n.a.	n.a.	n.a.	n.a.
	K	n.a.	n.a.	n.a.	n.a.	/	/	/	980	/	/	/	1010	n.a.	n.a.	n.a.	n.a.
	SL-E	n.a.	n.a.	n.a.	n.a.	150	/	/	890	150	/	/	1030	n.a.	n.a.	n.a.	n.a.
	SL-K	n.a.	n.a.	n.a.	n.a.	/	/	/	980	/	/	/	1000	n.a.	n.a.	n.a.	n.a.
1402	E	n.a.	n.a.	n.a.	n.a.	150	/	/	1010	150	/	/	1030	n.a.	n.a.	n.a.	n.a.
	K	n.a.	n.a.	n.a.	n.a.	/	/	/	980	/	/	/	1010	n.a.	n.a.	n.a.	n.a.
	SL-E	n.a.	n.a.	n.a.	n.a.	150	/	/	1010	150	/	/	1030	n.a.	n.a.	n.a.	n.a.
	SL-K	n.a.	n.a.	n.a.	n.a.	/	/	/	980	/	/	/	1000	n.a.	n.a.	n.a.	n.a.
1503	K	n.a.	n.a.	n.a.	n.a.	/	/	/	980	/	/	/	1200	n.a.	n.a.	n.a.	n.a.
	SL-K	n.a.	n.a.	n.a.	n.a.	/	/	/	980	/	/	/	1200	n.a.	n.a.	n.a.	n.a.
1593	K	/	/	/	980	n.a.	n.a.	n.a.	n.a.	/	/	/	1200	500	/	/	1190
	SL-K	/	/	/	1230	n.a.	n.a.	n.a.	n.a.	/	/	/	1250	500	/	/	1440
1663	K	/	/	/	980	n.a.	n.a.	n.a.	n.a.	/	/	/	1200	500	/	/	1190
	SL-K	/	/	/	1230	n.a.	n.a.	n.a.	n.a.	/	/	/	1260	500	/	/	1440
1773	K	/	/	/	1230	n.a.	n.a.	n.a.	n.a.	/	/	/	1250	500	/	/	1440
	SL-K	/	/	/	1230	n.a.	n.a.	n.a.	n.a.	/	/	/	1260	500	/	/	1440
1883	K	/	/	/	1240	n.a.	n.a.	n.a.	n.a.	/	/	/	1260	500	/	/	1450
	SL-K	/	/	/	1230	n.a.	n.a.	n.a.	n.a.	/	/	/	1260	500	/	/	1450

extra L	Unit's extra length
extra W	Unit's extra operating width (NOT to be considered for transport)
extra H	Unit's extra height
extra WGT	Unit's extra weight (pumps and piping)
HYDRONIC KIT 2 PUMPS 4 POLES LH	HYDRONIC KIT 2 PUMPS 4 POLES LH
HYDRONIC KIT 2 PUMPS 2 POLES LH	HYDRONIC KIT 2 PUMPS 2 POLES LH
HYDRONIC KIT 2 PUMPS 2P HH	HYDRONIC KIT 2 PUMPS 2P HH
2 PUMPS 4 POLES LH + VPF	2 PUMPS 4 POLES LH + VPF
-	Not available

HYDRONIC GROUP

Hydronic kit positioning

	Version	HYDRONIC KIT 2 PUMPS 4 POLES LH (4708)				HYDRONIC KIT 2 PUMPS 2 POLES LH (4711)				HYDRONIC KIT 2 PUMPS 2P HH (4712)				2 PUMPS 4 POLES LH + VPF (4719)			
		extra L [mm]	extra W [mm]	extra H [mm]	extra WGT [kg]	extra L [mm]	extra W [mm]	extra H [mm]	extra WGT [kg]	extra L [mm]	extra W [mm]	extra H [mm]	extra WGT [kg]	extra L [mm]	extra W [mm]	extra H [mm]	extra WGT [kg]

extra L	Unit's extra length
extra W	Unit's extra operating width (NOT to be considered for transport)
extra H	Unit's extra height
extra WGT	Unit's extra weight (pumps and piping)
HYDRONIC KIT 2 PUMPS 4 POLES LH	HYDRONIC KIT 2 PUMPS 4 POLES LH
HYDRONIC KIT 2 PUMPS 2 POLES LH	HYDRONIC KIT 2 PUMPS 2 POLES LH
HYDRONIC KIT 2 PUMPS 2P HH	HYDRONIC KIT 2 PUMPS 2P HH
2 PUMPS 4 POLES LH + VPF	2 PUMPS 4 POLES LH + VPF
-	Not available

HYDRONIC GROUP

Hydronic kit positioning

	Version	2 PUMPS 2 POLES LH + VPF (4722)				2 PUMPS 2 POLES HH + VPF (4723)											
		extra L [mm]	extra W [mm]	extra H [mm]	extra WGT [kg]	extra L [mm]	extra W [mm]	extra H [mm]	extra WGT [kg]	extra L [mm]	extra W [mm]	extra H [mm]	extra WGT [kg]	extra L [mm]	extra W [mm]	extra H [mm]	extra WGT [kg]
0322	K	1250	/	/	500	1250	/	/	580								
	SL-K	1250	/	/	500	1250	/	/	570								
0352	E	500	/	/	450	1250	/	/	520								
	K	1250	/	/	500	1250	/	/	580								
	SL-E	500	/	/	450	1250	/	/	520								
	SL-K	500	/	/	450	500	/	/	530								
0402	E	/	/	/	470	/	/	/	540								
	K	500	/	/	530	500	/	/	540								
	SL-E	/	/	/	480	/	/	/	550								
	SL-K	500	/	/	530	500	/	/	530								
0452	E	/	/	/	540	/	/	/	540								
	SL-E	/	/	/	550	/	/	/	540								
0472	E	/	/	/	590	/	/	/	660								
	K	500	/	/	530	500	/	/	670								
	SL-E	/	/	/	580	/	/	/	650								
	SL-K	500	/	/	530	500	/	/	670								
0512	K	1250	/	/	630	1250	/	/	710								
	SL-K	1250	/	/	630	1250	/	/	710								
0572	E	/	/	/	540	/	/	/	640								
	K	1250	/	/	640	1250	/	/	710								
	SL-E	/	/	/	540	/	/	/	640								
	SL-K	1250	/	/	640	1250	/	/	710								
0602	E	/	/	/	700	/	/	/	650								
	SL-E	/	/	/	700	/	/	/	650								
0652	E	150	/	/	840	150	/	/	1010								
	K	1250	/	/	820	1250	/	/	800								
	SL-E	150	/	/	850	150	/	/	1020								
	SL-K	1250	/	/	820	1250	/	/	800								
0702	E	150	/	/	970	150	/	/	1020								
	K	1250	/	/	940	1250	/	/	800								
	SL-E	150	/	/	970	150	/	/	1010								
	SL-K	/	/	/	870	/	/	/	770								
0772	E	150	/	/	980	150	/	/	1180								
	K	1250	/	/	930	1250	/	/	810								
	SL-E	150	/	/	970	150	/	/	1180								
	SL-K	1250	/	/	920	1250	/	/	810								
0852	E	/	/	/	840	/	/	/	1100								
	K	1250	/	/	960	1250	/	/	850								
	SL-E	/	/	/	840	/	/	/	1100								
	SL-K	1250	/	/	960	1250	/	/	850								
0902	E	/	/	/	840	/	/	/	1100								
	K	150	/	/	900	150	/	/	1140								
	SL-E	/	/	/	850	/	/	/	1100								
	SL-K	150	/	/	900	150	/	/	1140								

extra L	Unit's extra length
extra W	Unit's extra operating width (NOT to be considered for transport)
extra H	Unit's extra height
extra WGT	Unit's extra weight (pumps and piping)
2 PUMPS 2 POLES LH + VPF	2 PUMPS 2 POLES LH + VPF
2 PUMPS 2 POLES HH + VPF	2 PUMPS 2 POLES HH + VPF
-	Not available

HYDRONIC GROUP

Hydronic kit positioning

	Version	2 PUMPS 2 POLES LH + VPF (4722)				2 PUMPS 2 POLES HH + VPF (4723)											
		extra L [mm]	extra W [mm]	extra H [mm]	extra WGT [kg]	extra L [mm]	extra W [mm]	extra H [mm]	extra WGT [kg]	extra L [mm]	extra W [mm]	extra H [mm]	extra WGT [kg]	extra L [mm]	extra W [mm]	extra H [mm]	extra WGT [kg]
1002	E	/	/	/	860	/	/	/	1070								
	K	150	/	/	980	150	/	/	1150								
	SL-E	/	/	/	850	/	/	/	1070								
	SL-K	150	/	/	970	150	/	/	1140								
1052	E	/	/	/	980	/	/	/	1120								
	K	150	/	/	960	150	/	/	1100								
	SL-E	/	/	/	970	/	/	/	1120								
	SL-K	/	/	/	950	/	/	/	1120								
1102	K	150	/	/	960	150	/	/	1100								
	SL-K	/	/	/	950	/	/	/	1120								
1152	E	150	/	/	950	150	/	/	1190								
	K	/	/	/	950	/	/	/	1170								
	SL-E	150	/	/	950	150	/	/	1190								
	SL-K	/	/	/	950	/	/	/	1170								
1222	E	150	/	/	950	150	/	/	1190								
	K	/	/	/	1130	/	/	/	1170								
	SL-E	150	/	/	950	150	/	/	1190								
	SL-K	/	/	/	1120	/	/	/	1170								
1262	K	/	/	/	1100	/	/	/	1130								
	SL-K	/	/	/	1180	/	/	/	1210								
1322	E	150	/	/	1090	150	/	/	1230								
	K	/	/	/	1190	/	/	/	1210								
	SL-E	150	/	/	1090	150	/	/	1230								
	SL-K	/	/	/	1180	/	/	/	1210								
1402	E	150	/	/	1210	150	/	/	1240								
	K	/	/	/	1190	/	/	/	1210								
	SL-E	150	/	/	1210	150	/	/	1240								
	SL-K	/	/	/	1180	/	/	/	1210								
1503	K	500	/	/	1190	500	/	/	1410								
	SL-K	500	/	/	1190	500	/	/	1410								
1593	K	n.a.	n.a.	n.a.	n.a.	500	/	/	1420								
	SL-K	n.a.	n.a.	n.a.	n.a.	500	/	/	1470								
1663	K	n.a.	n.a.	n.a.	n.a.	500	/	/	1410								
	SL-K	n.a.	n.a.	n.a.	n.a.	500	/	/	1470								
1773	K	n.a.	n.a.	n.a.	n.a.	500	/	/	1460								
	SL-K	n.a.	n.a.	n.a.	n.a.	500	/	/	1470								
1883	K	n.a.	n.a.	n.a.	n.a.	500	/	/	1470								
	SL-K	n.a.	n.a.	n.a.	n.a.	500	/	/	1470								

extra L	Unit's extra length
extra W	Unit's extra operating width (NOT to be considered for transport)
extra H	Unit's extra height
extra WGT	Unit's extra weight (pumps and piping)
2 PUMPS 2 POLES LH + VPF	2 PUMPS 2 POLES LH + VPF
2 PUMPS 2 POLES HH + VPF	2 PUMPS 2 POLES HH + VPF
-	Not available

HYDRONIC GROUP

HEAT EXCHANGER USER SIDE - 2 PUMPS 2 POLES HH + VPF

SIZE		CH		PUMP					CH
		Pfgross	Qfgross	Rif.	Model	N.	F.L.A.	F.L.I.	HU
		[kW] (1)	[l/s] (1)			Pole	[A]	[kW]	[kPa]
0322	K	322,1	15,40	A1	TPD 80-250/2 IE3	2	14	7,500	216
	SL-K	310,2	14,83						220
0352	E	340,3	16,27	A2					213
	K	350,2	16,75						204
	SL-E	336,3	16,08						214
	SL-K	358,4	17,14						201
0402	E	389,8	18,64	A3					191
	K	411,9	19,70						181
	SL-E	386,0	18,46						193
	SL-K	410,2	19,62						182
0452	E	444,9	21,27	A4					181
	SL-E	439,6	21,02						183
0472	E	485,0	23,20	B1	TPD 80-330/2 IE3	2	21	11,00	220
	K	464,4	22,21						210
	SL-E	480,9	23,00						222
	SL-K	450,1	21,53						217
0512	K	516,7	24,71	B2					205
	SL-K	511,7	24,47						207
0572	E	570,3	27,27	B3					181
	K	573,4	27,42						184
	SL-E	563,4	26,94						185
	SL-K	557,4	26,66						192
0602	E	619,0	29,60	B4					179
	SL-E	610,9	29,21						183
0652	E	658,9	31,51	F1	NB 65-160/157 IE3	2	20	11,00	198
	K	645,8	30,88		TPD 100-310/2 IE3	2	28	15,00	231
	SL-E	650,6	31,11		NB 65-160/157 IE3	2	20	11,00	202
	SL-K	621,9	29,74		TPD 100-310/2 IE3	2	28	15,00	239
0702	E	698,5	33,40	J1	NB 65-160/157 IE3	2	20	11,00	179
	K	707,6	33,84		TPD 100-310/2 IE3	2	28	15,00	222
	SL-E	690,1	33,00		NB 65-160/157 IE3	2	20	11,00	184
	SL-K	713,0	34,10		TPD 100-310/2 IE3	2	28	15,00	220
0772	E	756,1	36,16	N1	NB 80-160/161 IE3	2	35	18,50	241
	K	779,8	37,29		TPD 100-310/2 IE3	2	28	15,00	197
	SL-E	748,9	35,81		NB 80-160/161 IE3	2	35	18,50	243
	SL-K	770,4	36,84		TPD 100-310/2 IE3	2	28	15,00	200
0852	E	844,7	40,40	R1	NB 80-160/161 IE3	2	35	18,50	221
	K	862,9	41,27		TPD 100-310/2 IE3	2	28	15,00	189
	SL-E	834,3	39,90		NB 80-160/161 IE3	2	35	18,50	224
	SL-K	828,6	39,63		TPD 100-310/2 IE3	2	28	15,00	201
0902	E	918,1	43,90	S1	NB 80-160/161 IE3	2	35	18,50	211
	K	937,3	44,82						205
	SL-E	905,0	43,28						214
	SL-K	901,6	43,12						215
1002	E	1001	47,88	S2					180
	K	996,0	47,63						187
	SL-E	987,3	47,22						184
	SL-K	959,9	45,90						198
1052	E	1061	50,72	S3					179
	K	1056	50,51						180
	SL-E	1046	50,04						183

HYDRONIC GROUP

HEAT EXCHANGER USER SIDE - 2 PUMPS 2 POLES HH + VPF

SIZE		CH		PUMP					CH
		Pfgross	Qfgross	Rif.	Model	N.	F.L.A.	F.L.I.	HU
		[kW] (1)	[l/s] (1)			Pole	[A]	[kW]	[kPa]
1052	SL-K	1037	49,60	T1	NB 80-160/161 IE3	2	35	18,50	186
1102	K	1098	52,49	T2					167
	SL-K	1098	52,51						167
1152	E	1133	54,17	U1	NB 80-160/167 IE3	2	40	22,00	189
	K	1139	54,45						185
	SL-E	1118	53,45						194
	SL-K	1131	54,08						187
1222	E	1207	57,73	U2					164
	K	1232	58,92						155
	SL-E	1191	56,95						170
	SL-K	1222	58,46						159
1262	K	1264	60,46	V1	NB 100-160/167 IE3	2	37	22,00	192
	SL-K	1257	60,10						193
1322	E	1311	62,68	V2					192
	K	1332	63,71						173
	SL-E	1295	61,94						196
	SL-K	1284	61,40						186
1402	E	1372	65,62	V3					177
	K	1400	66,96						154
	SL-E	1355	64,80						181
	SL-K	1386	66,26						158
1503	K	1506	72,03	W1	NB 100-160/176 IE3	2	51	30,00	194
	SL-K	1451	69,40						209
1593	K	1592	76,12	W2					170
	SL-K	1573	75,22						175
1663	K	1664	79,55	W3					177
	SL-K	1645	78,65						182
1773	K	1778	85,04	W4					144
	SL-K	1714	81,99						163
1883	K	1839	87,92	W5					122
	SL-K	1773	84,78						142

(1) Values refer to nominal conditions
CH Cooling mode
Pf Cooling capacity unit (Cooling mode)
Pt Heating capacity unit (Heating mode)
Q Plant (side) exchanger water flow
F.L.I. Pump power input
F.L.A. Pump running current
HU Pump residual pressure head (Units with hydronic group without mains filter)

HEAT EXCHANGER USER SIDE - 2 PUMPS 2 POLES HH + VPF

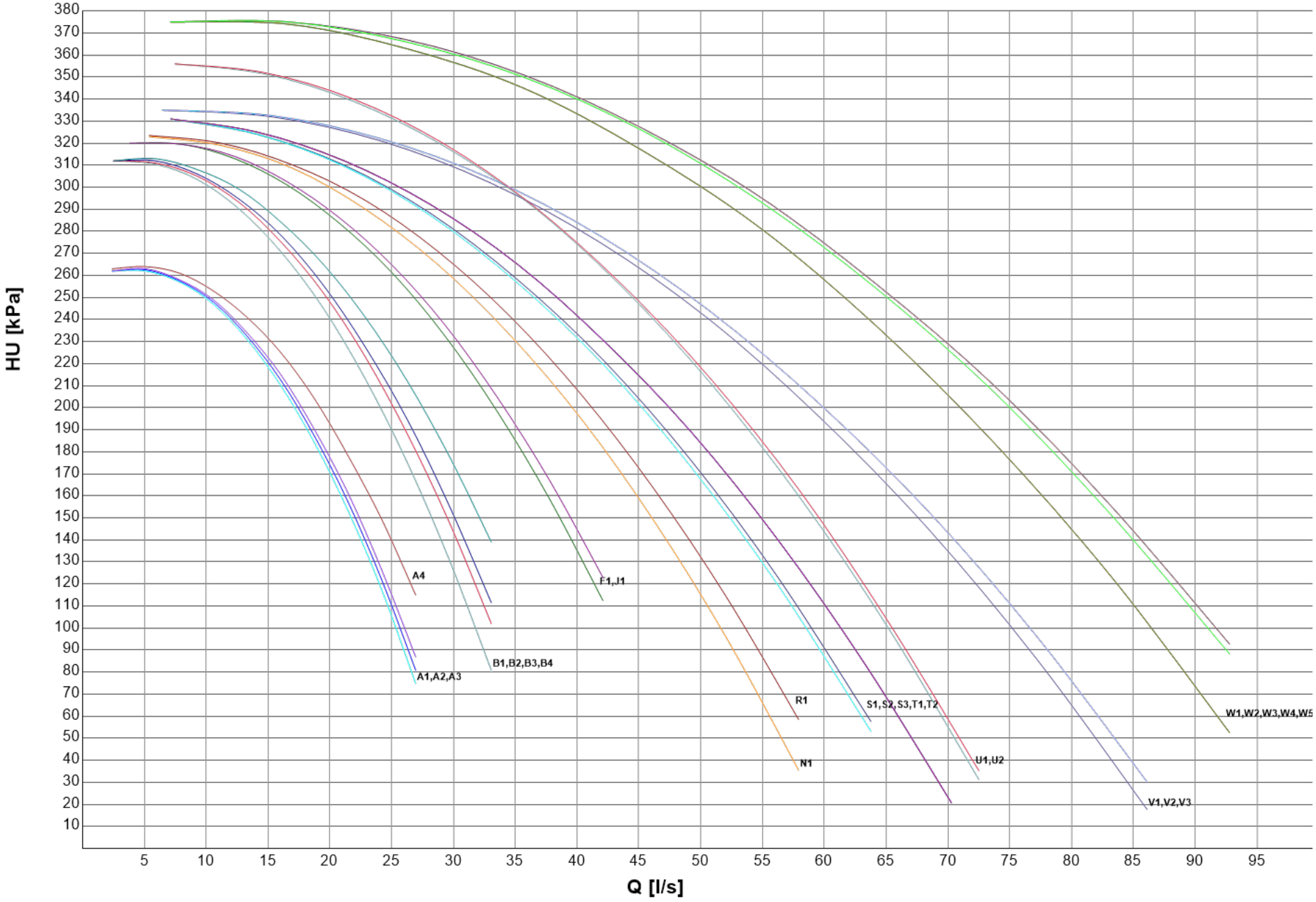

HYDRONIC GROUP

HEAT EXCHANGER USER SIDE - 2 PUMPS 2 POLES LH + VPF

SIZE		CH		PUMP					CH
		Pfgross	Qfgross	Rif.	Model	N.	F.L.A.	F.L.I.	HU
		[kW] (1)	[l/s] (1)			Pole	[A]	[kW]	[kPa]
0322	K	322,1	15,40	A1	TPD 80-210/2 IE3	2	8	4,000	125
	SL-K	310,2	14,83						130
0352	E	340,3	16,27	A2					120
	K	350,2	16,75						110
	SL-E	336,3	16,08						122
	SL-K	358,4	17,14						106
0402	E	389,8	18,64	D1					93,0
	K	411,9	19,70		TPD 100-200/2 IE3	2	11	5,500	120
	SL-E	386,0	18,46		TPD 80-210/2 IE3	2	8	4,000	95,2
	SL-K	410,2	19,62		TPD 100-200/2 IE3	2	11	5,500	121
0452	E	444,9	21,27	D2					121
	SL-E	439,6	21,02						124
0472	E	485,0	23,20	H1	TPD 100-240/2 IE3	2	14	7,500	148
	K	464,4	22,21		TPD 100-200/2 IE3	2	11	5,500	93,4
	SL-E	480,9	23,00		TPD 100-240/2 IE3	2	14	7,500	150
	SL-K	450,1	21,53		TPD 100-200/2 IE3	2	11	5,500	101
0512	K	516,7	24,71	I1	TPD 100-240/2 IE3	2	14	7,500	134
	SL-K	511,7	24,47						137
0572	E	570,3	27,27	I2					113
	K	573,4	27,42						116
	SL-E	563,4	26,94						116
	SL-K	557,4	26,66						124
0602	E	619,0	29,60	J1	TPD 100-250/2 IE3	2	21	11,00	180
	SL-E	610,9	29,21						183
0652	E	658,9	31,51	K1	NB 65-125/137 IE3	2	14	7,500	123
	K	645,8	30,88						118
	SL-E	650,6	31,11						126
	SL-K	621,9	29,74						127
0702	E	698,5	33,40	L1	NB 65-125/144 IE3	2	20	11,00	143
	K	707,6	33,84						139
	SL-E	690,1	33,00						146
	SL-K	713,0	34,10						137
0772	E	756,1	36,16	L2					132
	K	779,8	37,29						107
	SL-E	748,9	35,81						135
	SL-K	770,4	36,84						111
0852	E	844,7	40,40	M1	NB 80-160/147-127	2	21	11,00	111
	K	862,9	41,27						110
	SL-E	834,3	39,90						114
	SL-K	828,6	39,63						121
0902	E	918,1	43,90	M2					98,2
	K	937,3	44,82						91,8
	SL-E	905,0	43,28						102
	SL-K	901,6	43,12						104
1002	E	1001	47,88	P1					64,2
	K	996,0	47,63		NB 80-160/151 IE3	2	26	15,00	130
	SL-E	987,3	47,22		NB 80-160/147-127	2	21	11,00	69,4
	SL-K	959,9	45,90		NB 80-160/151 IE3	2	26	15,00	142
1052	E	1061	50,72	P2					122
	K	1056	50,51						124
	SL-E	1046	50,04						127

HYDRONIC GROUP

HEAT EXCHANGER USER SIDE - 2 PUMPS 2 POLES LH + VPF

SIZE		CH		PUMP					CH
		Pfgross	Qfgross	Rif.	Model	N.	F.L.A.	F.L.I.	HU
		[kW] (1)	[l/s] (1)			Pole	[A]	[kW]	[kPa]
1052	SL-K	1037	49,60	Q1	NB 80-160/151 IE3	2	26	15,00	130
1102	K	1098	52,49	Q2					110
	SL-K	1098	52,51						110
1152	E	1133	54,17	Q3					100
	K	1139	54,45						95,8
	SL-E	1118	53,45						105
	SL-K	1131	54,08						98,5
1222	E	1207	57,73	T1					75,0
	K	1232	58,92		NB 80-160/161 IE3	2	35	18,50	123
	SL-E	1191	56,95		NB 80-160/151 IE3	2	26	15,00	80,8
	SL-K	1222	58,46		NB 80-160/161 IE3	2	35	18,50	127
1262	K	1264	60,46	U1	NB 100-160/160-154 IE3	2	33	18,50	151
	SL-K	1257	60,10						152
1322	E	1311	62,68	Y1	NB 80-160/161 IE3	2	35	18,50	123
	K	1332	63,71		NB 100-160/160-154 IE3	2	33	18,50	133
	SL-E	1295	61,94		NB 80-160/161 IE3	2	35	18,50	129
	SL-K	1284	61,40		NB 100-160/160-154 IE3	2	33	18,50	146
1402	E	1372	65,62	Y2					137
	K	1400	66,96						115
	SL-E	1355	64,80						141
	SL-K	1386	66,26						119
1503	K	1506	72,03	Y3					101
	SL-K	1451	69,40						116

(1) Values refer to nominal conditions
CH Cooling mode
Pf Cooling capacity unit (Cooling mode)
Pt Heating capacity unit (Heating mode)

Q Plant (side) exchanger water flow
F.L.I. Pump power input
F.L.A. Pump running current
HU Pump residual pressure head (Units with hydronic group without mains filter)

HEAT EXCHANGER USER SIDE - 2 PUMPS 2 POLES LH + VPF

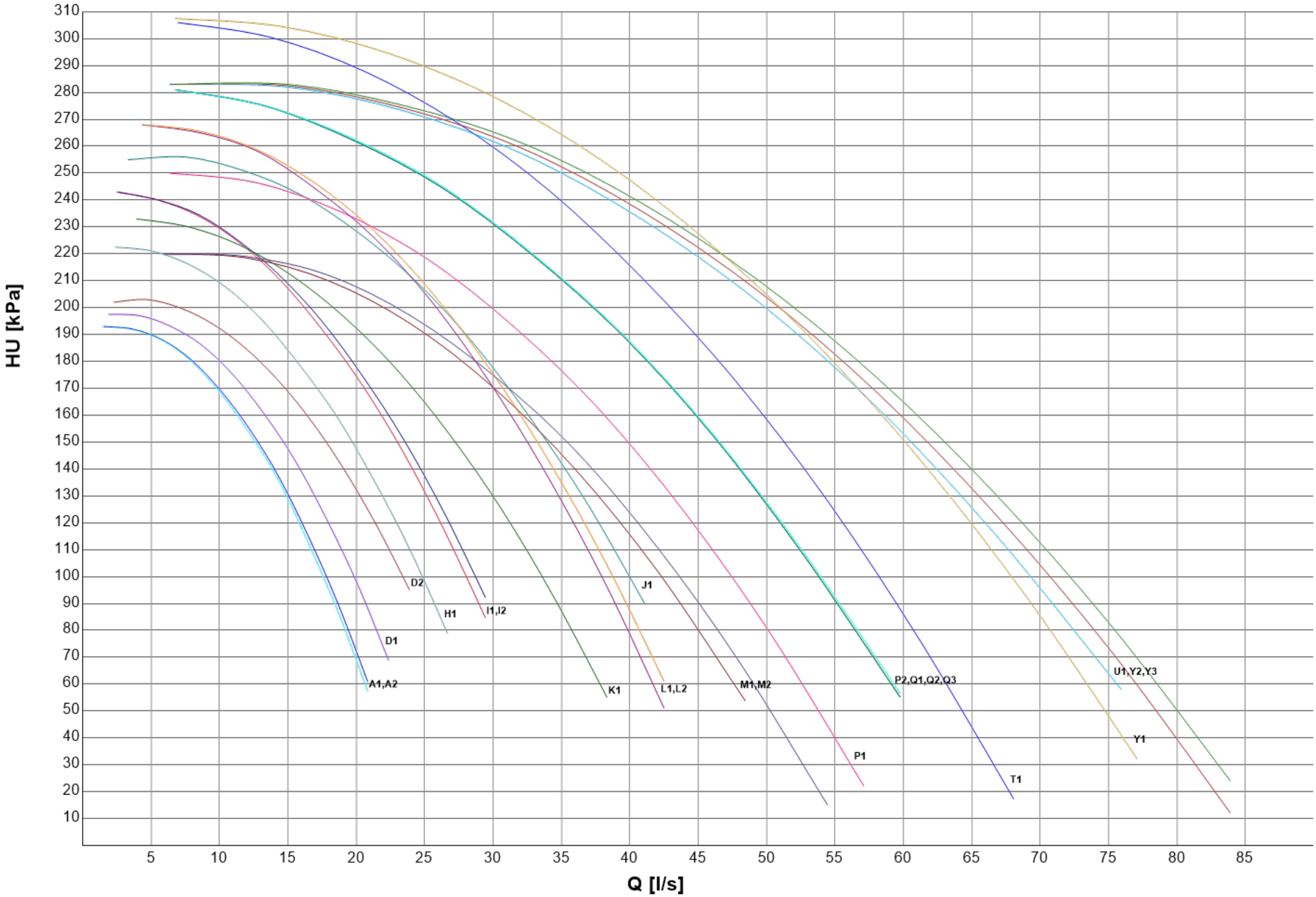

HYDRONIC GROUP

HEAT EXCHANGER USER SIDE - 2 PUMPS 4 POLES LH + VPF

SIZE		CH		PUMP					CH
		Pfgross	Qfgross	Rif.	Model	N.	F.L.A.	F.L.I.	HU
		[kW] (1)	[l/s] (1)			Pole	[A]	[kW]	[kPa]
1593	K	1592	76,12	A1	NB 125-250/249 IE3	4	37	18,50	79,1
	SL-K	1573	75,22						82,6
1663	K	1664	79,55	B1	NB 150-250_242 IE3	4	43	22,00	104
	SL-K	1645	78,65						106
1773	K	1778	85,04	B2					92,9
	SL-K	1714	81,99						99,4
1883	K	1839	87,92	B3					82,5
	SL-K	1773	84,78						89,7

(1) Values refer to nominal conditions
CH Cooling mode
Pf Cooling capacity unit (Cooling mode)
Pt Heating capacity unit (Heating mode)

Q Plant (side) exchanger water flow
F.L.I. Pump power input
F.L.A. Pump running current
HU Pump residual pressure head (Units with hydronic group without mains filter)

HEAT EXCHANGER USER SIDE - 2 PUMPS 4 POLES LH + VPF

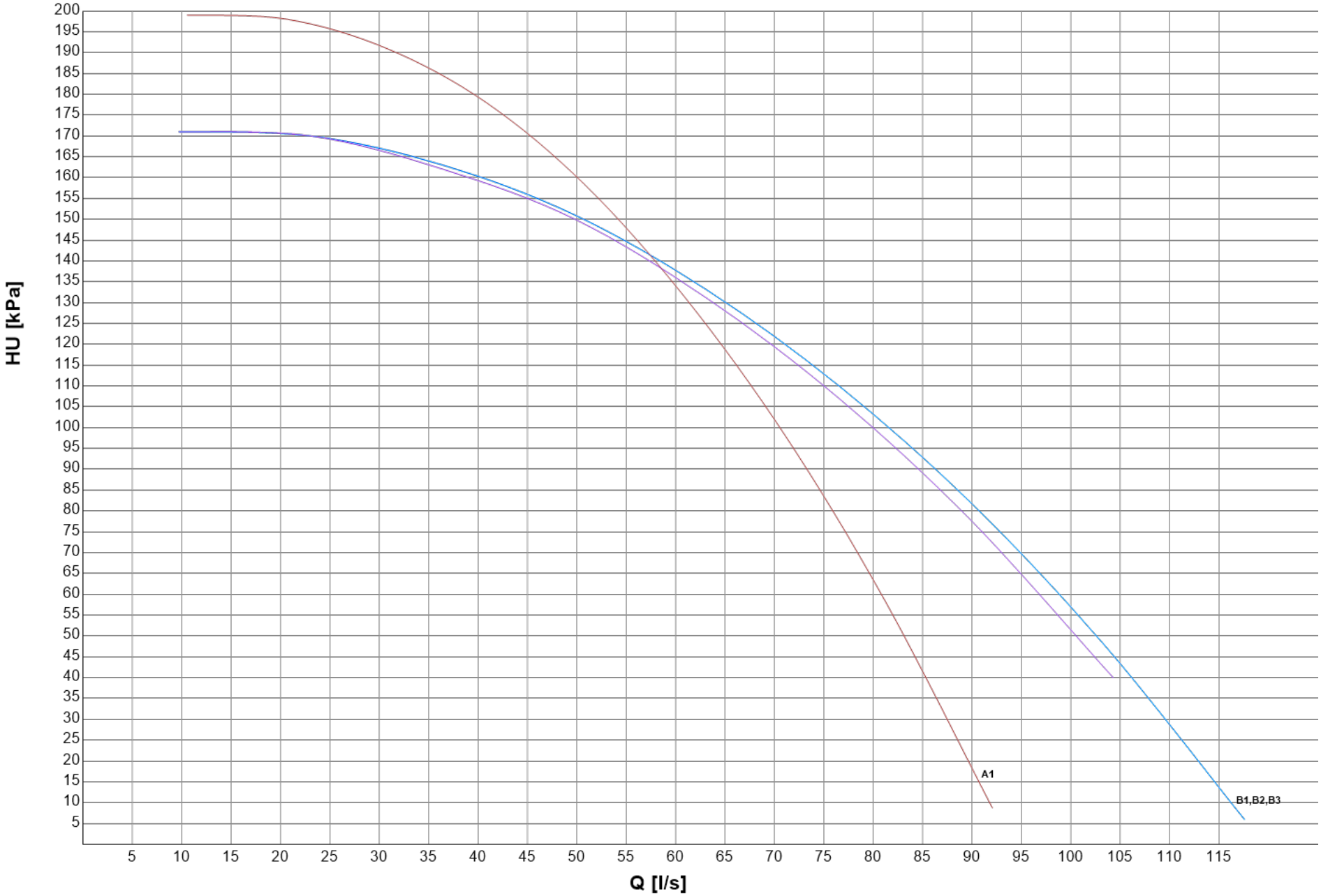

HYDRONIC GROUP

HEAT EXCHANGER USER SIDE - HYDRONIC KIT 2 PUMPS 2 POLES LH

SIZE		CH		PUMP					CH
		Pfgross	Qfgross	Rif.	Model	N.	F.L.A.	F.L.I.	HU
		[kW] (1)	[l/s] (1)			Pole	[A]	[kW]	[kPa]
0322	K	322,1	15,40	A1	TPD 80-210/2 IE3	2	8	4,000	125
	SL-K	310,2	14,83						130
0352	E	340,3	16,27	A2					120
	K	350,2	16,75						110
	SL-E	336,3	16,08						122
	SL-K	358,4	17,14						106
0402	E	389,8	18,64	D1					93,0
	K	411,9	19,70		TPD 100-200/2 IE3	2	11	5,500	120
	SL-E	386,0	18,46		TPD 80-210/2 IE3	2	8	4,000	95,2
	SL-K	410,2	19,62		TPD 100-200/2 IE3	2	11	5,500	121
0452	E	444,9	21,27	D2					121
	SL-E	439,6	21,02						124
0472	E	485,0	23,20	H1	TPD 100-240/2 IE3	2	14	7,500	148
	K	464,4	22,21		TPD 100-200/2 IE3	2	11	5,500	93,4
	SL-E	480,9	23,00		TPD 100-240/2 IE3	2	14	7,500	150
	SL-K	450,1	21,53		TPD 100-200/2 IE3	2	11	5,500	101
0512	K	516,7	24,71	I1	TPD 100-240/2 IE3	2	14	7,500	134
	SL-K	511,7	24,47						137
0572	E	570,3	27,27	I2					113
	K	573,4	27,42						116
	SL-E	563,4	26,94						116
	SL-K	557,4	26,66						124
0602	E	619,0	29,60	J1	TPD 100-250/2 IE3	2	21	11,00	180
	SL-E	610,9	29,21						183
0652	E	658,9	31,51	K1	NB 65-125/137 IE3	2	14	7,500	123
	K	645,8	30,88						118
	SL-E	650,6	31,11						126
	SL-K	621,9	29,74						127
0702	E	698,5	33,40	L1	NB 65-125/144 IE3	2	20	11,00	143
	K	707,6	33,84						139
	SL-E	690,1	33,00						146
	SL-K	713,0	34,10						137
0772	E	756,1	36,16	L2					132
	K	779,8	37,29						107
	SL-E	748,9	35,81						135
	SL-K	770,4	36,84						111
0852	E	844,7	40,40	M1	NB 80-160/147-127	2	21	11,00	111
	K	862,9	41,27						110
	SL-E	834,3	39,90						114
	SL-K	828,6	39,63						121
0902	E	918,1	43,90	M2					98,2
	K	937,3	44,82						91,8
	SL-E	905,0	43,28						102
	SL-K	901,6	43,12						104
1002	E	1001	47,88	P1					64,2
	K	996,0	47,63		NB 80-160/151 IE3	2	26	15,00	130
	SL-E	987,3	47,22		NB 80-160/147-127	2	21	11,00	69,4
	SL-K	959,9	45,90		NB 80-160/151 IE3	2	26	15,00	142
1052	E	1061	50,72	P2					122
	K	1056	50,51						124
	SL-E	1046	50,04						127

HYDRONIC GROUP

HEAT EXCHANGER USER SIDE - HYDRONIC KIT 2 PUMPS 2 POLES LH

SIZE		CH		PUMP					CH
		Pfgross	Qfgross	Rif.	Model	N.	F.L.A.	F.L.I.	HU
		[kW] (1)	[l/s] (1)			Pole	[A]	[kW]	[kPa]
1052	SL-K	1037	49,60	Q1	NB 80-160/151 IE3	2	26	15,00	130
1102	K	1098	52,49	Q2					110
	SL-K	1098	52,51						110
1152	E	1133	54,17	Q3					100
	K	1139	54,45						95,8
	SL-E	1118	53,45						105
	SL-K	1131	54,08						98,5
1222	E	1207	57,73	T1					75,0
	K	1232	58,92		NB 80-160/161 IE3	2	35	18,50	123
	SL-E	1191	56,95		NB 80-160/151 IE3	2	26	15,00	80,8
	SL-K	1222	58,46		NB 80-160/161 IE3	2	35	18,50	127
1262	K	1264	60,46	U1	NB 100-160/160-154 IE3	2	33	18,50	151
	SL-K	1257	60,10						152
1322	E	1311	62,68	Y1	NB 80-160/161 IE3	2	35	18,50	123
	K	1332	63,71		NB 100-160/160-154 IE3	2	33	18,50	133
	SL-E	1295	61,94		NB 80-160/161 IE3	2	35	18,50	129
	SL-K	1284	61,40		NB 100-160/160-154 IE3	2	33	18,50	146
1402	E	1372	65,62	Y2					137
	K	1400	66,96						115
	SL-E	1355	64,80						141
	SL-K	1386	66,26						119
1503	K	1506	72,03	Y3					101
	SL-K	1451	69,40						116

(1) Values refer to nominal conditions
CH Cooling mode
Pf Cooling capacity unit (Cooling mode)
Pt Heating capacity unit (Heating mode)

Q Plant (side) exchanger water flow
F.L.I. Pump power input
F.L.A. Pump running current
HU Pump residual pressure head (Units with hydronic group without mains filter)

HEAT EXCHANGER USER SIDE - HYDRONIC KIT 2 PUMPS 2 POLES LH

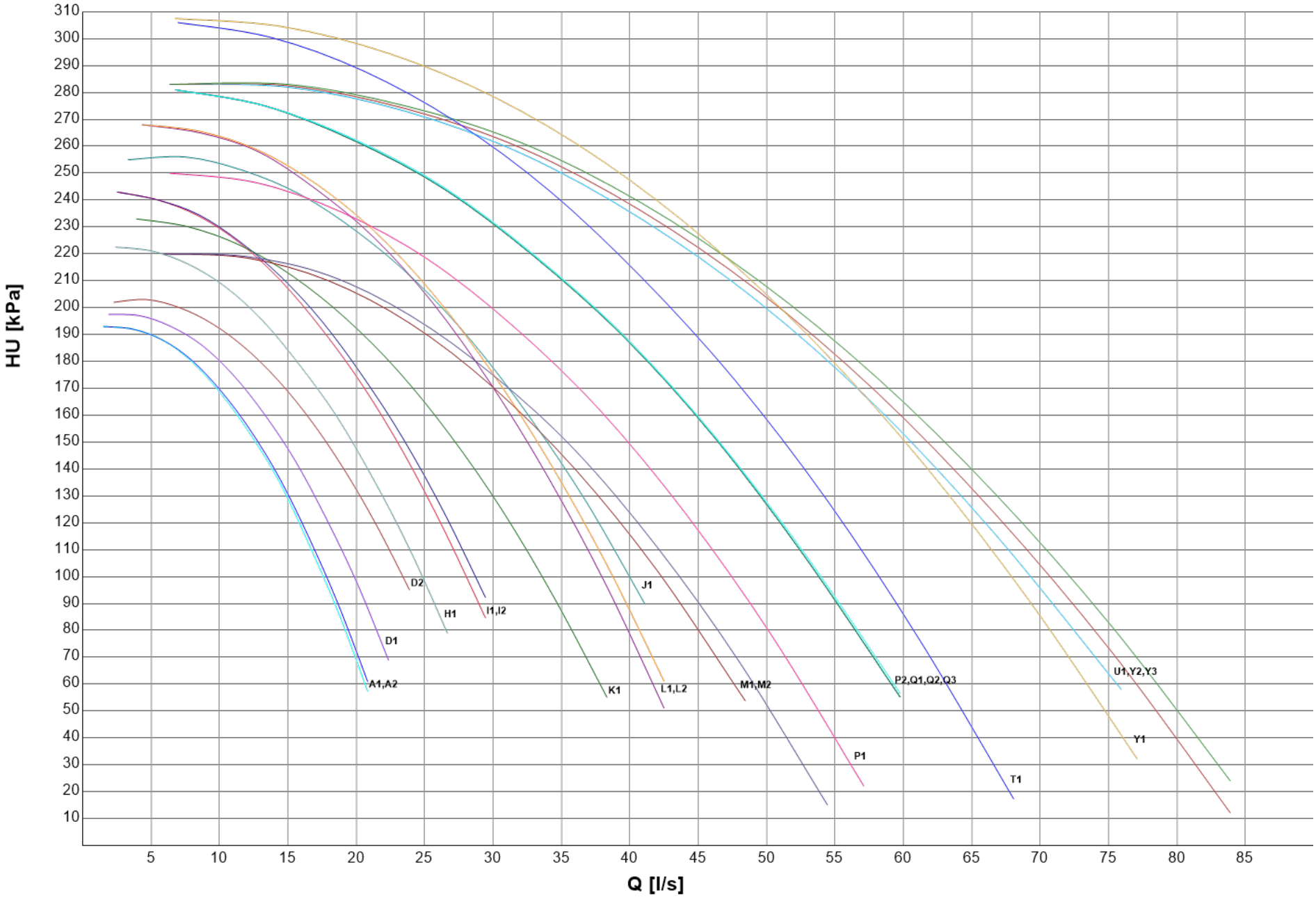

HYDRONIC GROUP

HYDRONIC GROUP

HEAT EXCHANGER USER SIDE - HYDRONIC KIT 2 PUMPS 2P HH

SIZE		CH		PUMP					CH
		Pfgross	Qfgross	Rif.	Model	N.	F.L.A.	F.L.I.	HU
		[kW] (1)	[l/s] (1)			Pole	[A]	[kW]	[kPa]
0322	K	322,1	15,40	A1	TPD 80-250/2 IE3	2	14	7,500	216
	SL-K	310,2	14,83						220
0352	E	340,3	16,27	A2					213
	K	350,2	16,75						204
	SL-E	336,3	16,08						214
	SL-K	358,4	17,14						201
0402	E	389,8	18,64	A3					191
	K	411,9	19,70						181
	SL-E	386,0	18,46						193
	SL-K	410,2	19,62						182
0452	E	444,9	21,27	A4					181
	SL-E	439,6	21,02						183
0472	E	485,0	23,20	B1	TPD 80-330/2 IE3	2	21	11,00	220
	K	464,4	22,21						210
	SL-E	480,9	23,00						222
	SL-K	450,1	21,53						217
0512	K	516,7	24,71	B2					205
	SL-K	511,7	24,47						207
0572	E	570,3	27,27	B3					181
	K	573,4	27,42						184
	SL-E	563,4	26,94						185
	SL-K	557,4	26,66						192
0602	E	619,0	29,60	B4					179
	SL-E	610,9	29,21						183
0652	E	658,9	31,51	F1	NB 65-160/157 IE3	2	20	11,00	198
	K	645,8	30,88		TPD 100-310/2 IE3	2	28	15,00	231
	SL-E	650,6	31,11		NB 65-160/157 IE3	2	20	11,00	202
	SL-K	621,9	29,74		TPD 100-310/2 IE3	2	28	15,00	239
0702	E	698,5	33,40	J1	NB 65-160/157 IE3	2	20	11,00	179
	K	707,6	33,84		TPD 100-310/2 IE3	2	28	15,00	222
	SL-E	690,1	33,00		NB 65-160/157 IE3	2	20	11,00	184
	SL-K	713,0	34,10		TPD 100-310/2 IE3	2	28	15,00	220
0772	E	756,1	36,16	N1	NB 80-160/161 IE3	2	35	18,50	241
	K	779,8	37,29		TPD 100-310/2 IE3	2	28	15,00	197
	SL-E	748,9	35,81		NB 80-160/161 IE3	2	35	18,50	243
	SL-K	770,4	36,84		TPD 100-310/2 IE3	2	28	15,00	200
0852	E	844,7	40,40	R1	NB 80-160/161 IE3	2	35	18,50	221
	K	862,9	41,27		TPD 100-310/2 IE3	2	28	15,00	189
	SL-E	834,3	39,90		NB 80-160/161 IE3	2	35	18,50	224
	SL-K	828,6	39,63		TPD 100-310/2 IE3	2	28	15,00	201
0902	E	918,1	43,90	S1	NB 80-160/161 IE3	2	35	18,50	211
	K	937,3	44,82						205
	SL-E	905,0	43,28						214
	SL-K	901,6	43,12						215
1002	E	1001	47,88	S2					180
	K	996,0	47,63						187
	SL-E	987,3	47,22						184
	SL-K	959,9	45,90						198
1052	E	1061	50,72	S3					179
	K	1056	50,51						180
	SL-E	1046	50,04						183

HYDRONIC GROUP

HEAT EXCHANGER USER SIDE - HYDRONIC KIT 2 PUMPS 2P HH

SIZE		CH		PUMP					CH
		Pfgross	Qfgross	Rif.	Model	N.	F.L.A.	F.L.I.	HU
		[kW] (1)	[l/s] (1)			Pole	[A]	[kW]	[kPa]
1052	SL-K	1037	49,60	T1	NB 80-160/161 IE3	2	35	18,50	186
1102	K	1098	52,49	T2					167
	SL-K	1098	52,51						167
1152	E	1133	54,17	U1	NB 80-160/167 IE3	2	40	22,00	189
	K	1139	54,45						185
	SL-E	1118	53,45						194
	SL-K	1131	54,08						187
1222	E	1207	57,73	U2					164
	K	1232	58,92						155
	SL-E	1191	56,95						170
	SL-K	1222	58,46						159
1262	K	1264	60,46	V1	NB 100-160/167 IE3	2	37	22,00	192
	SL-K	1257	60,10						193
1322	E	1311	62,68	V2					192
	K	1332	63,71						173
	SL-E	1295	61,94						196
	SL-K	1284	61,40						186
1402	E	1372	65,62	V3					177
	K	1400	66,96						154
	SL-E	1355	64,80						181
	SL-K	1386	66,26						158
1503	K	1506	72,03	W1	NB 100-160/176 IE3	2	51	30,00	194
	SL-K	1451	69,40						209
1593	K	1592	76,12	W2					170
	SL-K	1573	75,22						175
1663	K	1664	79,55	W3					177
	SL-K	1645	78,65						182
1773	K	1778	85,04	W4					144
	SL-K	1714	81,99						163
1883	K	1839	87,92	W5					122
	SL-K	1773	84,78						142

(1) Values refer to nominal conditions
CH Cooling mode
Pf Cooling capacity unit (Cooling mode)
Pt Heating capacity unit (Heating mode)
Q Plant (side) exchanger water flow
F.L.I. Pump power input
F.L.A. Pump running current
HU Pump residual pressure head (Units with hydronic group without mains filter)

HEAT EXCHANGER USER SIDE - HYDRONIC KIT 2 PUMPS 2P HH

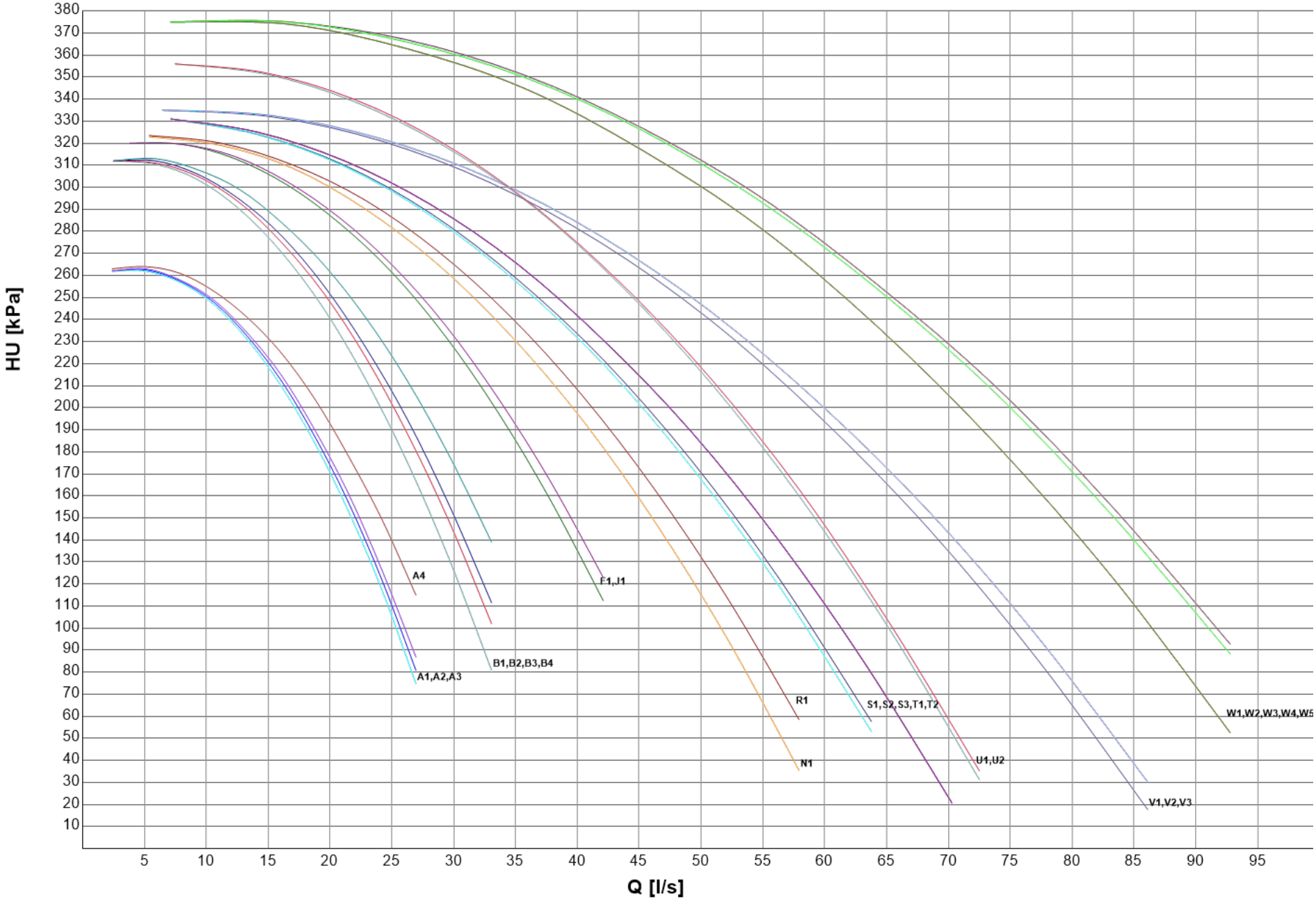

HYDRONIC GROUP

HEAT EXCHANGER USER SIDE - HYDRONIC KIT 2 PUMPS 4 POLES LH

SIZE		CH		PUMP					CH
		Pfgross	Qfgross	Rif.	Model	N.	F.L.A.	F.L.I.	HU
		[kW] (1)	[l/s] (1)			Pole	[A]	[kW]	[kPa]
1593	K	1592	76,12	A1	NB 125-250/249 IE3	4	37	18,50	79,1
	SL-K	1573	75,22						82,6
1663	K	1664	79,55	B1	NB 150-250_242 IE3	4	43	22,00	104
	SL-K	1645	78,65						106
1773	K	1778	85,04	B2					92,9
	SL-K	1714	81,99						99,4
1883	K	1839	87,92	B3					82,5
	SL-K	1773	84,78						89,7

(1) Values refer to nominal conditions
CH Cooling mode
Pf Cooling capacity unit (Cooling mode)
Pt Heating capacity unit (Heating mode)
Q Plant (side) exchanger water flow
F.L.I. Pump power input
F.L.A. Pump running current
HU Pump residual pressure head (Units with hydronic group without mains filter)

HEAT EXCHANGER USER SIDE - HYDRONIC KIT 2 PUMPS 4 POLES LH

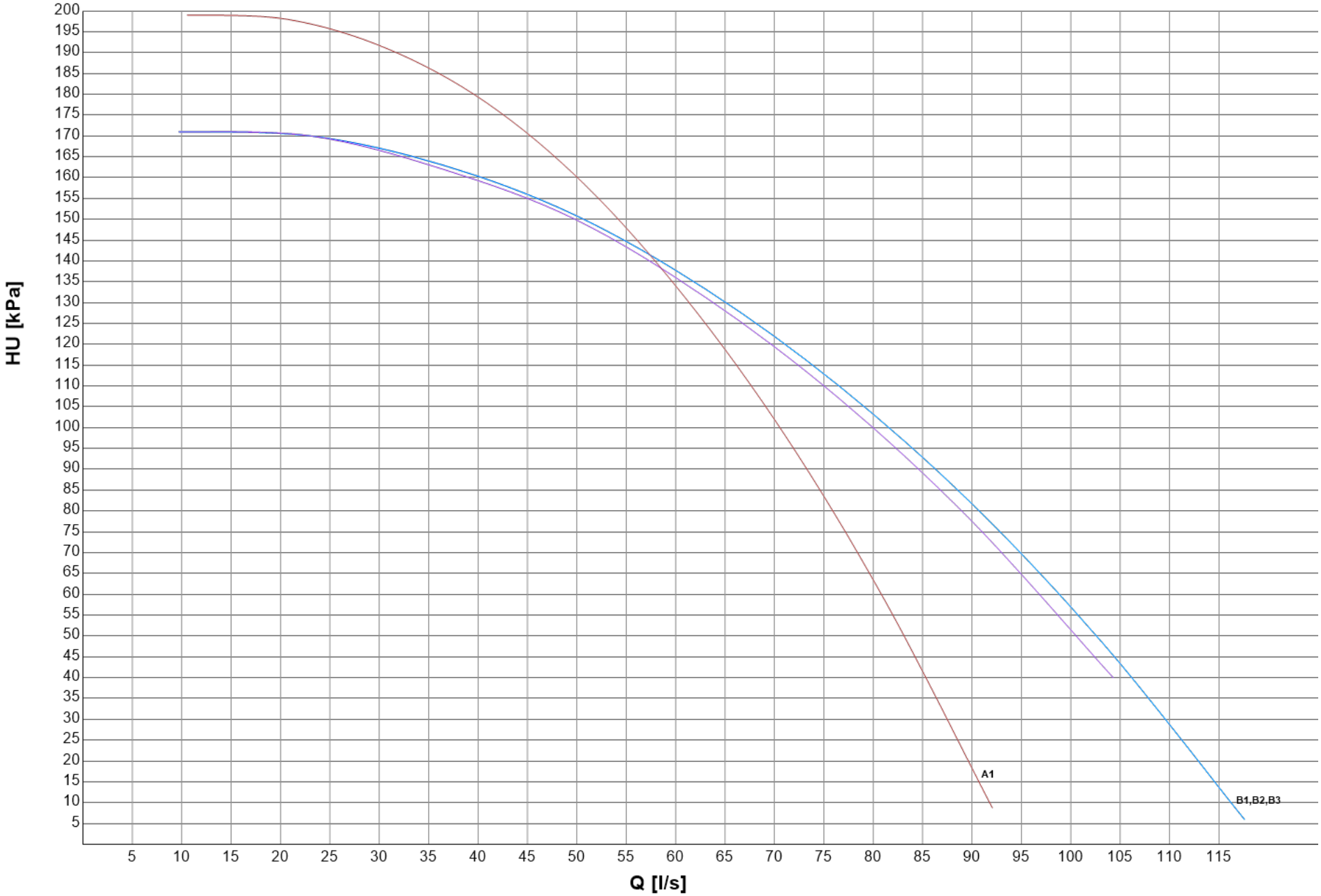

VARIABLE FLOW CONTROL

Pump energy consumption significantly impacts plant running costs, but it can be considerably reduced thanks to the use of variable speed pumps (inverter driven pumps), capable of adjusting the water flow rate according to the actual plant thermal load.
Mitsubishi Electric Hydronics & Cooling Systems has developed the VPF control series (Variable Primary Flow), that provides different water flow regulation logics specifically devoted to various hydraulic plant solutions: only a primary circuit, primary and secondary circuits, single unit or multi-unit systems controlled with external controller (Manager 3000, ClimaPRO) or with 1541, 1542 Multi Manager options.
The VPF systems adjust the pump speeds on the basis of the plant's thermal load and optimize the unit's thermoregulation algorithm for variable flow operation, in a dynamic and simultaneous way. This ensures the highest energy savings, stable operation, and complete reliability.

VPF SYSTEM (delta P control)
For plants with only a primary circuit

VPF - Plant and unit requirements

The VPF logic provides the variable flow control for the plant's primary circuit.

- Type of plant: primary circuit only, that feeds hydronic terminals fitted with a 2-way regulating valve
- Hydronic module: modulating regulation devices (0-10V signal) or variable speed pumps
- Unit thermoregulation: control of the leaving water temperature
- Monitored parameter: delta P on relevant users' hydronic terminal

Plant diagram for single unit system

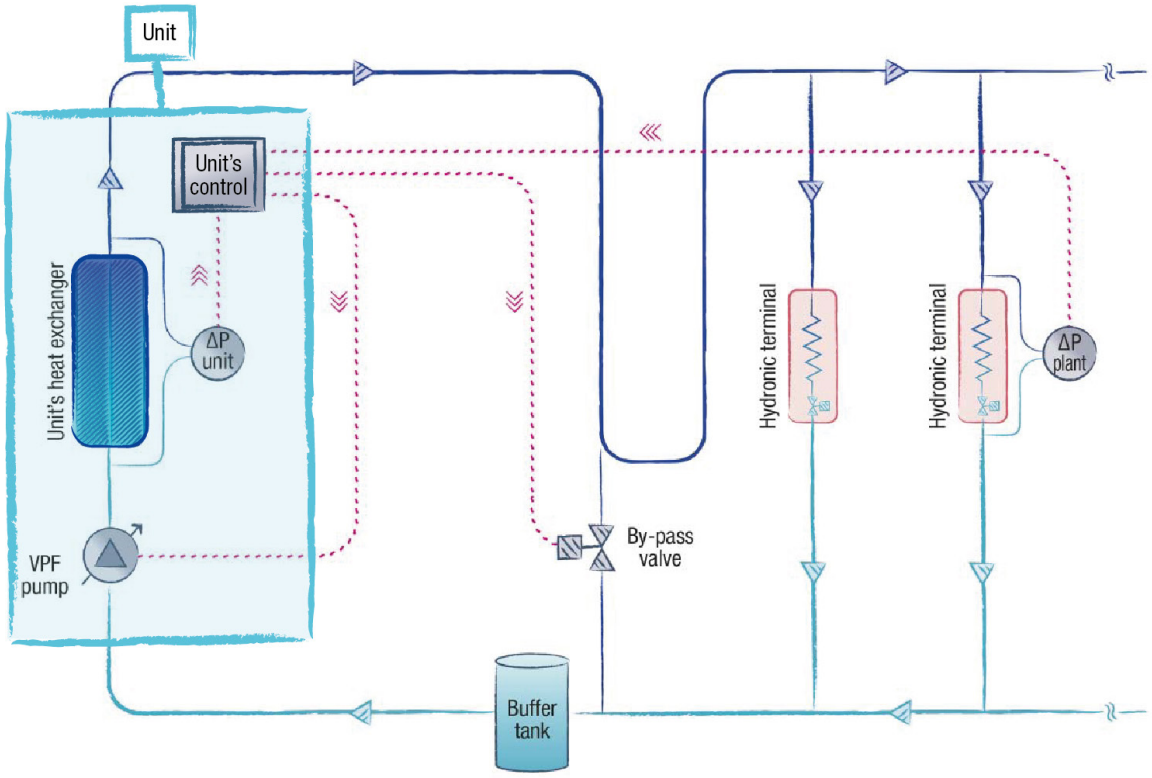

Plant diagram for multi-unit with external control system (Manager3000 or ClimaPRO)

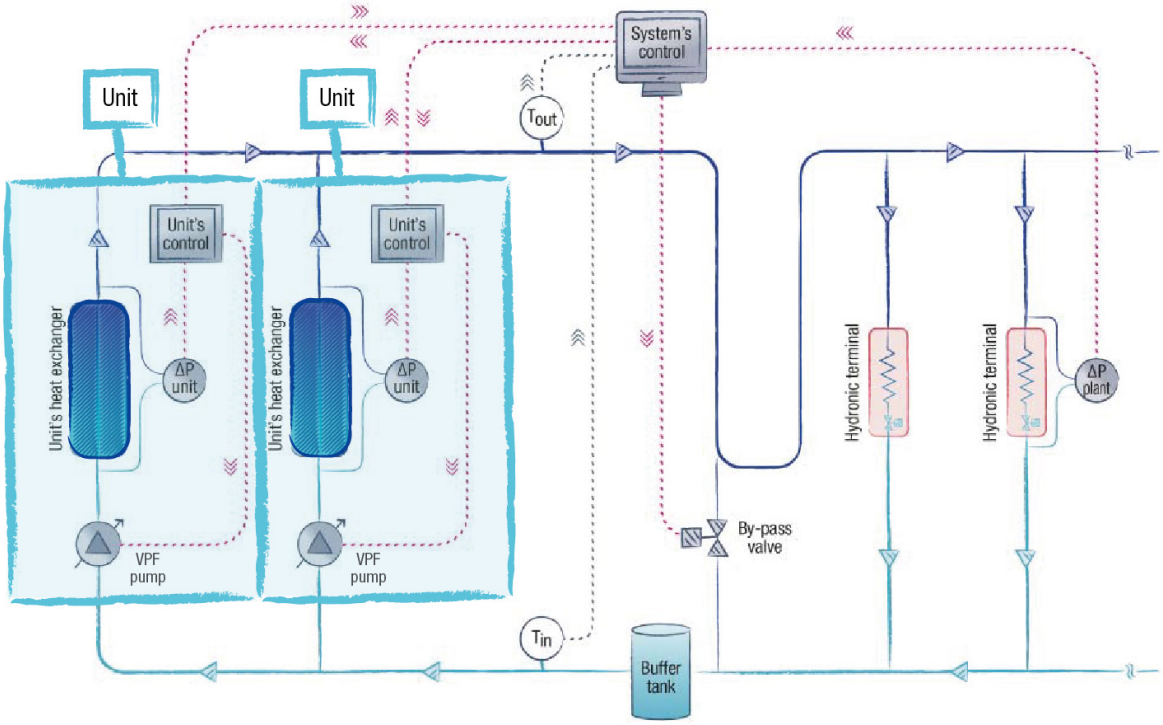

Plant diagram for multi-unit system with Multi Manager

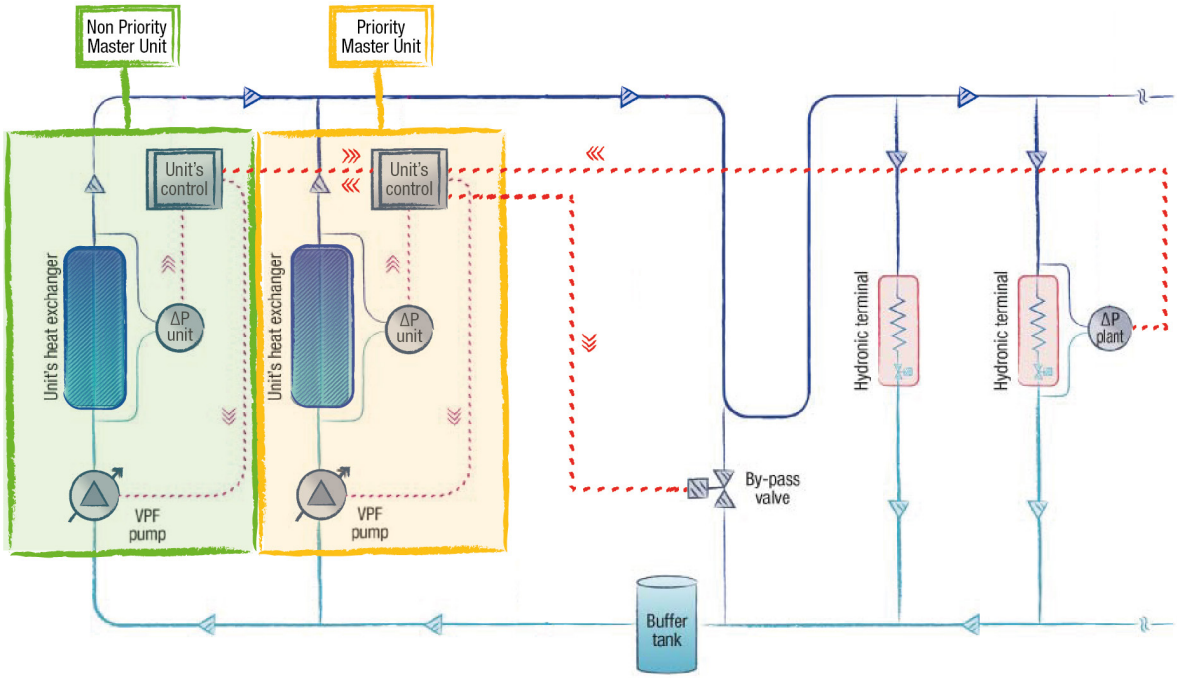

VPF - Operating logic

Water flow regulation

The VPF system monitors the differential pressure on the plant side (ΔP) and adjusts the pump speed in order to keep it within a defined range (ΔPmin ↔ ΔPmax).

- If ΔPmin ≤ ΔP ≤ ΔPmax
  The plant water flow is appropriate to the thermal load, the pump speed is kept constant.

- If ΔP > ΔPmax
  The plant water flow exceeds what is necessary to properly cover the thermal load, the pump speed is reduced to save pump energy.

- If ΔP < ΔPmin
  The plant water flow is too low to ensure the proper feed to the hydronic terminals, the pump speed is increased.

With the VPF system, the water flow can be reduced to 50% of the unit nominal water flow, with regards to the selection conditions, provided that the minimum water flow required by the unit's heat exchanger is respected (the control of the heat exchanger's minimum water flow is described below).
The pump speed regulation is performed with little progressive adjustments while continuously monitoring the values of both the delta P on the plant side and the water temperature on the heat exchanger. The absence of abrupt water flow changes prevents fluctuation due to possible conflicts with the unit's thermoregulation function (compressor regulation).

Control of the unit's minimum water flow

Under no circumstances can the primary circuit water flow be reduced below the minimum water flow required by the unit's heat exchanger. The monitoring of the unit's water flow is performed through a factory installed differential pressure transducer on the unit's heat exchanger. If the differential pressure on the plant side requests a users' water flow lower than the unit's minimum water flow, the VPF system commands the gradual opening of the hydraulic by-pass valve (safety function). This ensures that the minimum water flow required by the unit's heat exchanger is always provided. As soon as the hydronic terminals request an increase of the water flow (ΔP < ΔPmin), the VPF closes the by-pass valve.

Multi-unit systems

The VPF control logic is also the same for multi-unit systems.
The plant side differential pressure transducer reading and the by-pass valve opening are managed by the multi-unit control system (Manager3000, ClimaPRO, Multi Manager Master).
Each unit autonomously adjusts its pump speed on the basis of the information provided by the multi-unit control system.
When the plant load requests the activation of a stand-by unit, the multi-unit control system calculates the starting speed of its pump in order to avoid excessive water flow variation of the running units.

In case of multi-unit system with Multi Manager, at least one unit must be set as Priority Master (opt 1541). To grant redundancy to the system, more than one unit can be configured as Priority Master. All the Priority Masters must be connected to the differential pressure transducer and the by-pass valve. The Multi Manager system only takes into account the signal read and sent by the Master of the moment (a specific filtering device is part of the supply; see the table below, note (8)).
The Non Priority Master cannot be connected to differential pressure transducer and by-pass valve and cannot managed the VPF function. In the event that a Non Priority Master is elected as the Master of the system, the VPF function is suspended.

VPF - Devices and installation

Device	Accessory name		
	VPF (w/o DP)(SU, MM_PR) (1)	VPF (w DP)(SU, MM_PR) (2)	VPF (M3000, CPRO, MM_N-PR) (3)
Differential pressure transducer on the unit's heat exchanger and related controller expansion board	Factory installed	Factory installed	Factory installed
Controller expansion board to read the plant side differential pressure transducer (4-20mA signal) and manage the hydraulic by-pass valve opening (0-10V signal)	Factory installed	Factory installed	Factory installed on the multi-unit external control system (Manager3000, ClimaPRO) Not included with option 1542 (Non Priority Master unit) (5)
Plant side differential pressure transducer	Not included (the supply is the customer's responsibility) (4)	Factory supplied, installation is the client's responsibility (4)(5)	Factory supplied with the multi-unit external control system (Manager3000, ClimaPRO); installation is the client's responsibility Not included with option 1542 (Non Priority Master unit) (4)(6)
Plant side hydraulic by-pass valve	Not included (the supply is the customer's responsibility) (7)(8)	Not included (the supply is the customer's responsibility) (7)(8)	Not included (the supply is the customer's responsibility) (7)

(1) VPF for unit without plant differential pressure transducer included (for single unit plant and Priority Master unit)
(2) VPF for unit with plant differential pressure transducer included (for single unit plant and Priority Master unit)
(3) VPF for multi-unit plant with external controller (Manager3000, ClimaPRO) and Non Priority Master unit
(4) It is recommended to install the differential pressure transducer on the most hydraulically critical hydronic terminal, to ensure it has a proper water flow in any load condition.
(5) Technical features of the differential pressure transducer supplied:
Model: Huba Control 692.9 120071C1
Pressure range: 0 ... + 1 bar
Output: 4-20mA
Electrical connection: DIN EN 175301-803-A (IP 65)
Pressure connection adapters: male threaded G 1/8"
(6) It is the customer's responsibility to configure the multi-unit control system (Manager3000, ClimaPRO or Multi Manager) with option VPF.
(7) See attached table for information on the hydraulic by-pass design.
(8) In case of a multi-unit plant with more than one Master Priority unit (opt 1541) please specify it when emailing our sales. An additional device will be add to manage the multiple signals coming from unit's controller to the by-pass valve.

The following table provides the indications for a correct hydraulic by-pass design.

Heat exchanger minimum flow (m^3/h) (1)	Minimum by-pass diameter	Minimum by-pass valve diameter	Suggested valve model	Kvs	Suggested actuator model
From 19 to 30	DN50 (2”)	DN50 (2”)	VVG41.50	40	SKB60
Up to 37	DN65 (2" ½)	DN65 (2" ½)	VVF31.65	49	SKB60
Up to 60	DN80 (3“)	DN80 (3“)	VVF31.80	78	SKB60
Up to 95	DN100 (4“)	DN100 (4“)	VVF31.90	124	SKC60
Up to 150	DN125 (5“)	DN125 (5“)	VVF31.91	200	SKC60
Up to 230	DN150 (6”)	DN150 (6”)	VVF31.92	300	SKC60

((1) In case of a multi-unit system, the unit with the highest minimum water flow should be the reference.

VPF.D SYSTEM (delta T control)
For plants with primary and secondary circuits separated by a hydraulic decoupler.

VPF.D - Plant and unit requirements

The VPF.D logic provides the variable flow control for the plant’s primary circuit.

- Type of plant: primary and secondary circuits separated by a hydraulic decoupler
- Hydronic module: modulating regulation devices (0-10V signal) or variable speed pumps
- Unit thermoregulation: control of the leaving water temperature
- Monitored parameter: delta T on primary circuit

Plant diagram for single unit system

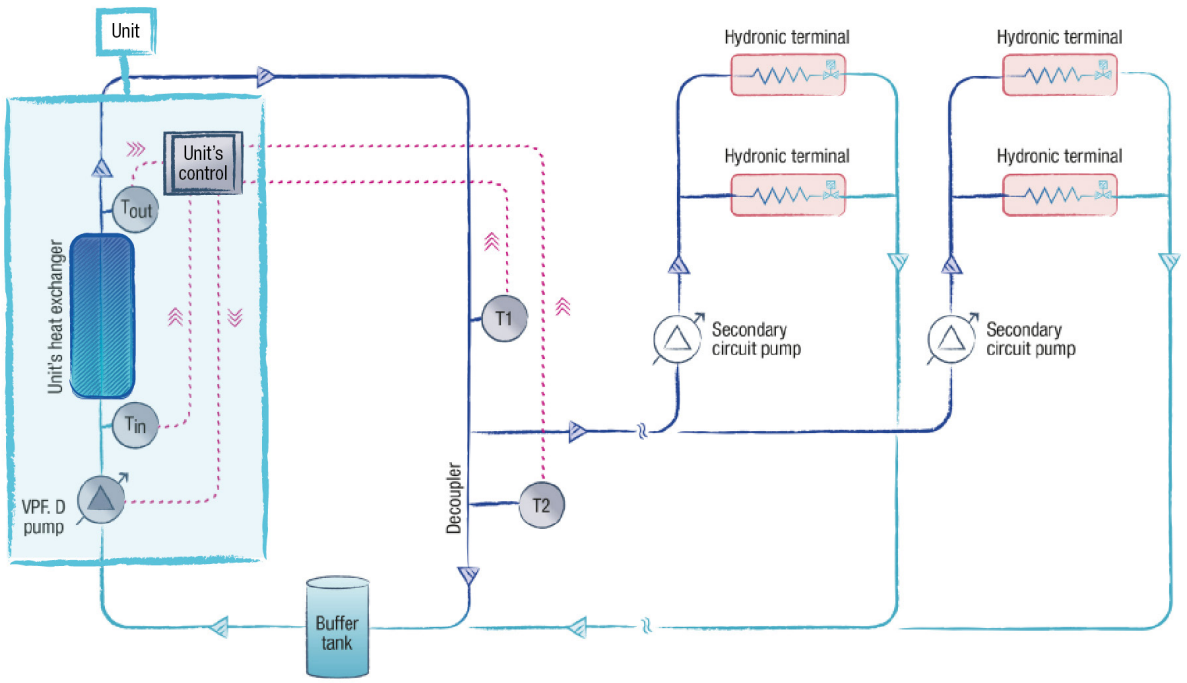

Plant diagram for multi-unit with external control system (Manager3000 or ClimaPRO)

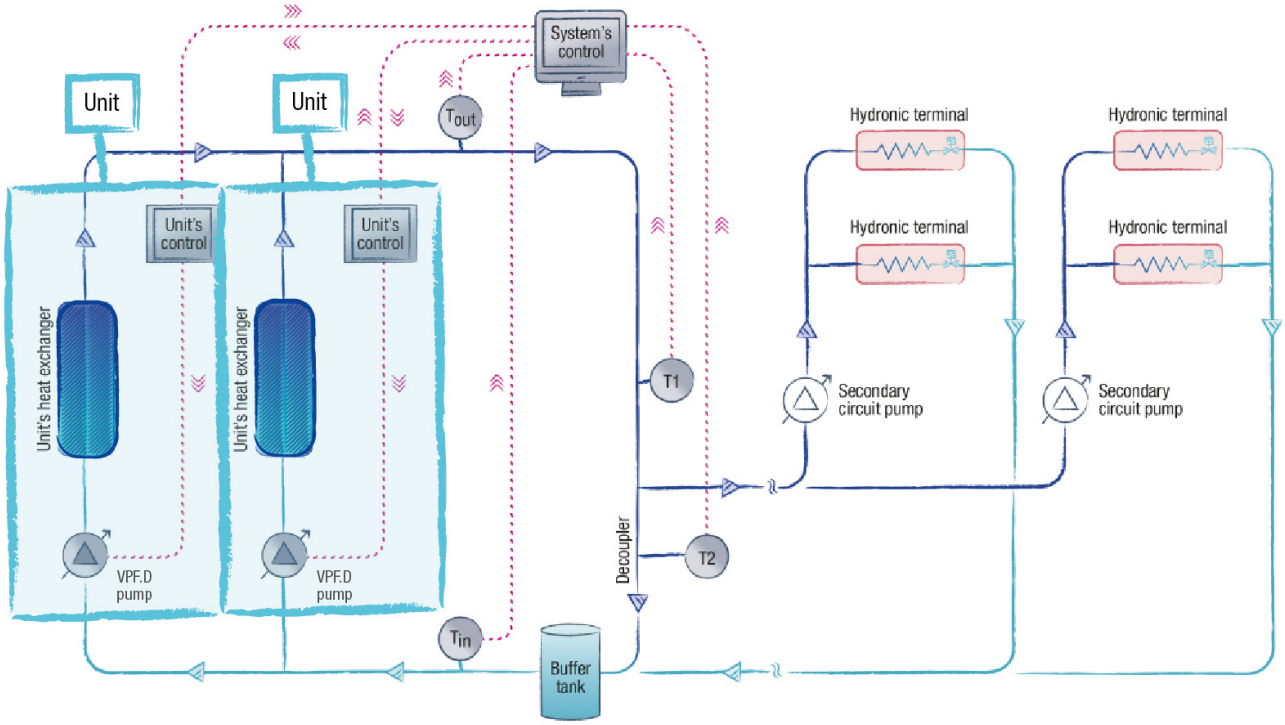

Plant diagram for multi-unit system with Multi Manager

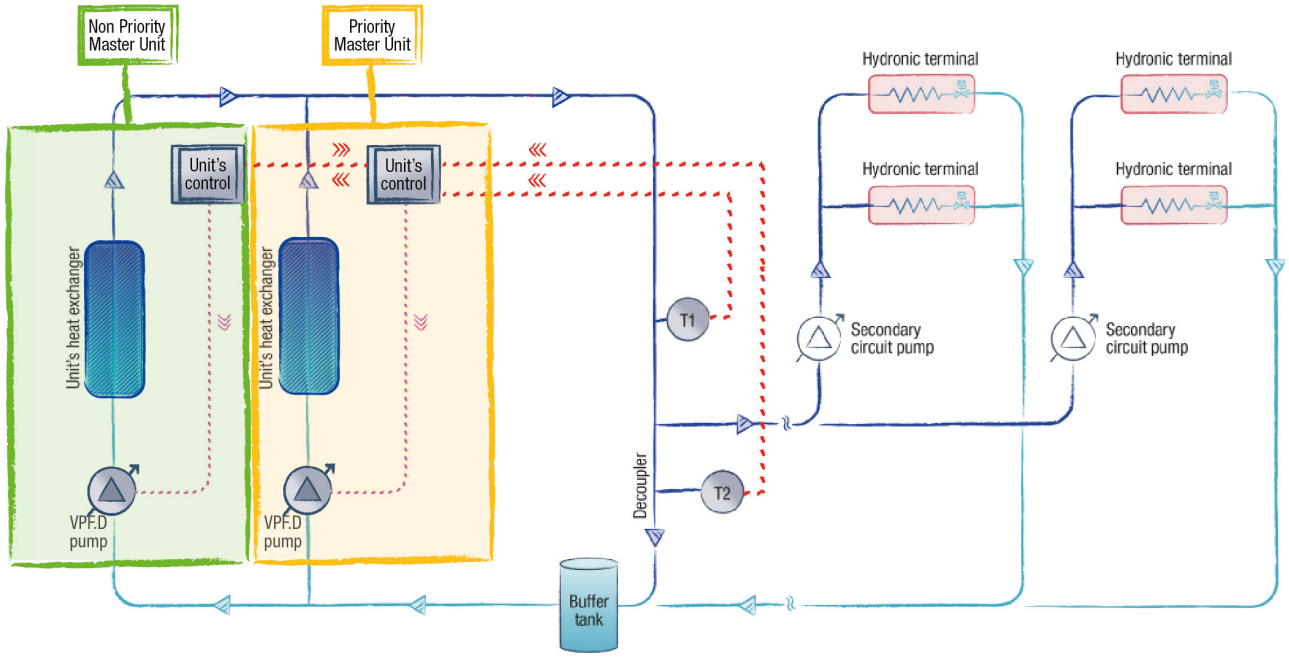

VPF.D - Operating logic

Water flow regulation

The VPF.D system monitors the temperature difference of the primary circuit (ΔT) (that corresponds to the temperature difference of the unit's heat exchanger in the case of a single unit system), and adjusts the primary circuit's pump speed in order to keep it within a defined range (ΔTmin ↔ ΔTmax). The secondary circuit water flow is completely independent and is to be managed by the client.

- If ΔTmin ≤ ΔT ≤ ΔTmax
  The plant water flow is appropriate to the thermal load, the pump speed is kept constant.

- If ΔT < ΔTmax
  The plant water flow exceeds what is necessary to properly cover the thermal load, the pump speed is reduced to save pump energy.

- If ΔT > ΔTmin
  The plant water flow is too low to ensure the proper feed to the users, the pump speed is increased.

To prevent the returning water of the secondary circuit from recirculating through the decoupler and mixing with the delivery water, which would cause serious plant regulation problems, the VPF.D provides a safety function based on the temperatures, which are detected by two probes on the plant side: T1 on the unit delivery line and T2 on the hydraulic decoupler. If during the water flow regulation of the circuits, the flow direction in the decoupler reverses (detected temperatures T1 < T2), the system forces a quick increase of the primary water flow until the correct direction of the flow in the decoupler is restored (detected temperatures T1 = T2).

With the VPF.D system, the water flow can be reduced to 50% of the unit nominal water flow, with regards to the selection conditions, provided that the minimum water flow required by the unit's heat exchanger is respected (the control of the heat exchanger's minimum water flow is described below).

The pump speed regulation is performed with little progressive adjustments while continuously monitoring the values of both the temperature difference on the primary circuit and the temperatures of the probes T1 and T2. The absence of abrupt water flow changes prevents fluctuation due to possible conflicts with the unit's thermoregulation function (compressor regulation).

Control of the unit's minimum water flow

Under no circumstances can the primary circuit water flow be reduced below the minimum water flow required by the unit's heat exchanger. The unit's minimum water flow is ensured by setting the minimum pump speed (service menu parameter).

Multi-unit systems

The VPF.D control logic is also the same for multi-unit systems.
The reading of the temperature difference on the primary circuit and the reading of the temperature probes T1 and T2 is managed by the multi-unit control system (Manager3000, ClimaPRO, Multi Manager Master).
Each unit autonomously adjusts its pump speed on the basis of the information provided by the multi-unit control system.
When the plant load requests the activation of a stand-by unit, the multi-unit control system calculates the starting speed of its pump in order to avoid excessive water flow variation of the running units.

In case of multi-unit system with Multi Manager, at least one unit must be set as Priority Master (opt 1541). To grant redundancy to the system, more than one unit can be configured as Priority Master. All the Priority Masters must be connected to the temperature probes T1 and T2. The Multi Manager system only takes into account the signal read and sent by the Master of the moment.
The Non Priority Master cannot be connected to the temperature probes T1 and T2, and cannot managed the VPF.D function. In the event that a Non Priority Master is elected as the Master of the system, the VPF.D function is suspended.

VPF.D - Devices and installation

Dispositivo	Accessory name	
	VPF.D (SU, MM_PR) (1)	VPF.D(M3000, CPRO, MM_N-PR) (2)
2 plant side NTC temperature sensors and related controller expansion board	Factory supplied (probes supplied without wells), installation is the client's responsibility (3)	Factory supplied with the multi-unit external control system, Manager3000 or ClimaPRO (probes supplied without wells); installation is the client's responsibility Not included with option 1542 (Non Priority Master unit) (3)(4)

(1) VPF.D for single unit plant and Priority Master unit
(2) VPF.D for multi-unit plant with external controller (Manager3000 or ClimaPRO) and Non Priority Master unit
(3) It is recommended to install the temperature probes as shown in the enclosed plant diagrams (T1 on the unit delivery line, T2 on the hydraulic decoupler)
(4) It is the customer's responsibility to configure the multi-unit control system (Manager3000, ClimaPRO or Multi Manager) with option VPF.D.

The following table provides the indications for a correct hydraulic decoupler design.

Heat exchanger minimum flow (m^3/h) (1)	Minimum hydraulic decoupler diameter
From 25 to 40	DN65 (2" ½)
Up to 60	DN80 (3")
Up to 100	DN100 (4")
Up to 150	DN125 (5")
Up to 225	DN150 (6")
Up to 375	DN200 (8")

(2) In case of a multi-unit system, the unit with the highest minimum water flow should be the reference.

CLIMAVENETA®

eco Changes for a greener tomorrow

Eco Changes is the Mitsubishi Electric Group's environmental statement, and expresses the Group's stance on environmental management. Through a wide range of businesses, we are helping contribute to the realization of a sustainable society.

MITSUBISHI ELECTRIC HYDRONICS & IT COOLING SYSTEMS S.p.A.

Head Office: Via Caduti di Cefalonia 1 - 36061 Bassano del Grappa (VI) - Italy
Tel (+39) 0424 509 500 - Fax (+39) 0424 509 509
www.melcohit.com

FSC www.fsc.org MIX Paper from responsible sources FSC® C133396