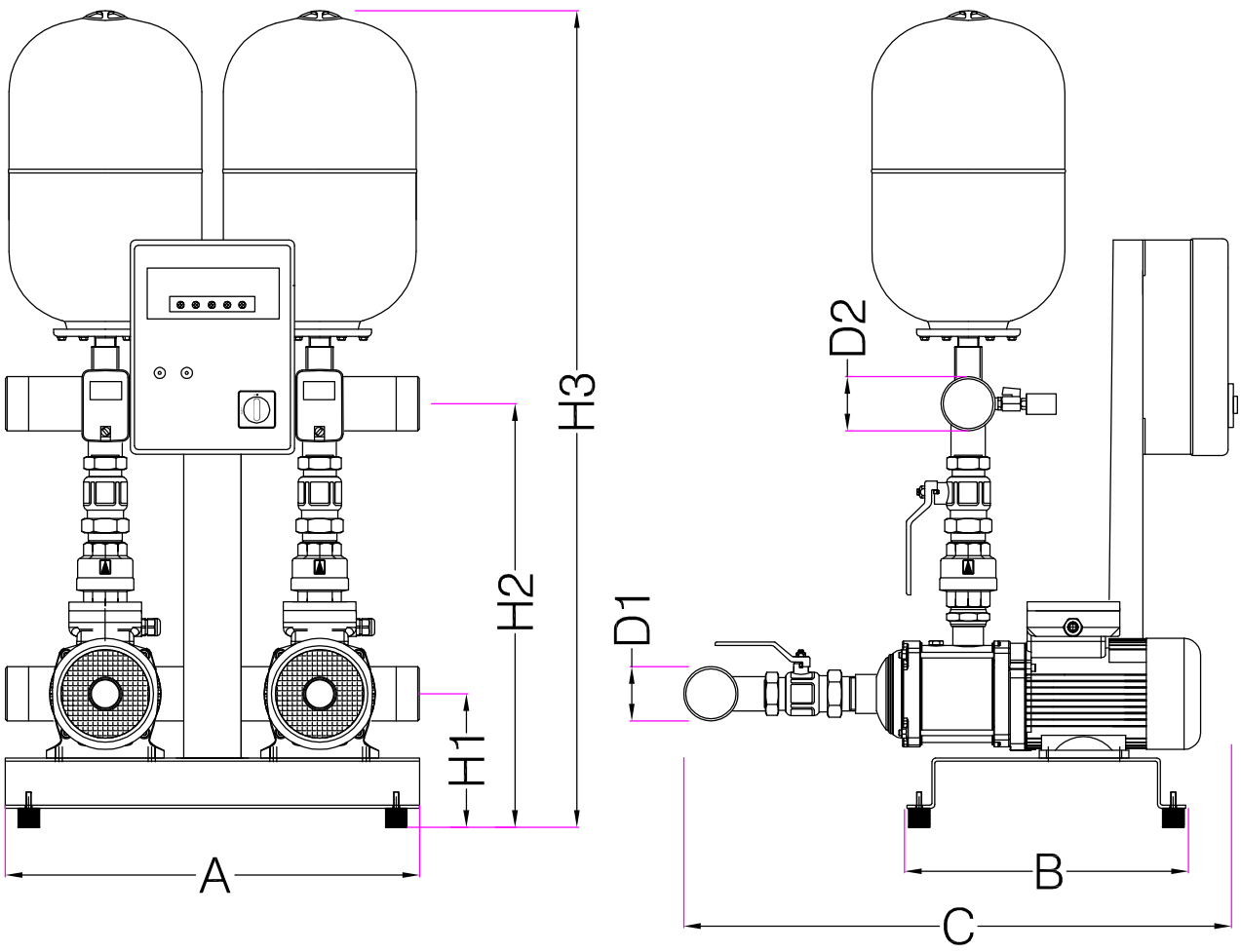

GP-2P EMH.....

TABELLA DIMENSIONI E PESI									
TIPO	D1	D2	H1	H2	H3	A	B	C	Kg
GP-2P EMH3/6	2"	1"1/2	180	540	1000	580	380	720	54
GP-2P EMH4/6									58
GP-2P EMH4/7									59
GP-2P EMH8/3.1	2"1/2	2"1/2	190	590	1040			800	74
GP-2P EMH8/3									76
GP-2P EMH8/4									80
GP-2P EMH10/3								820	86
GP-2P EMH10/4									92
GP-2P EMH10/5									98