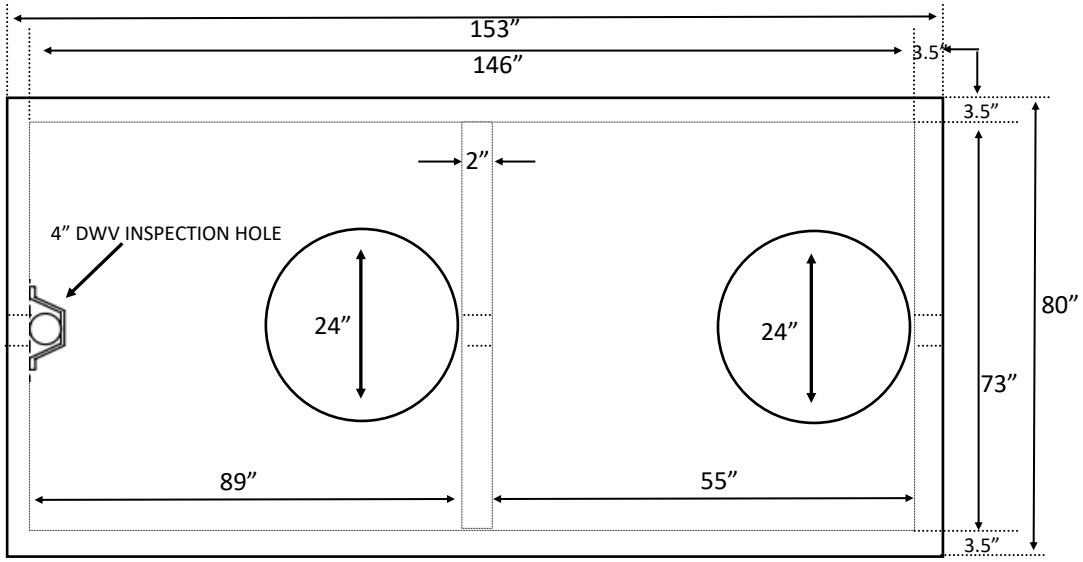

-PLAN-

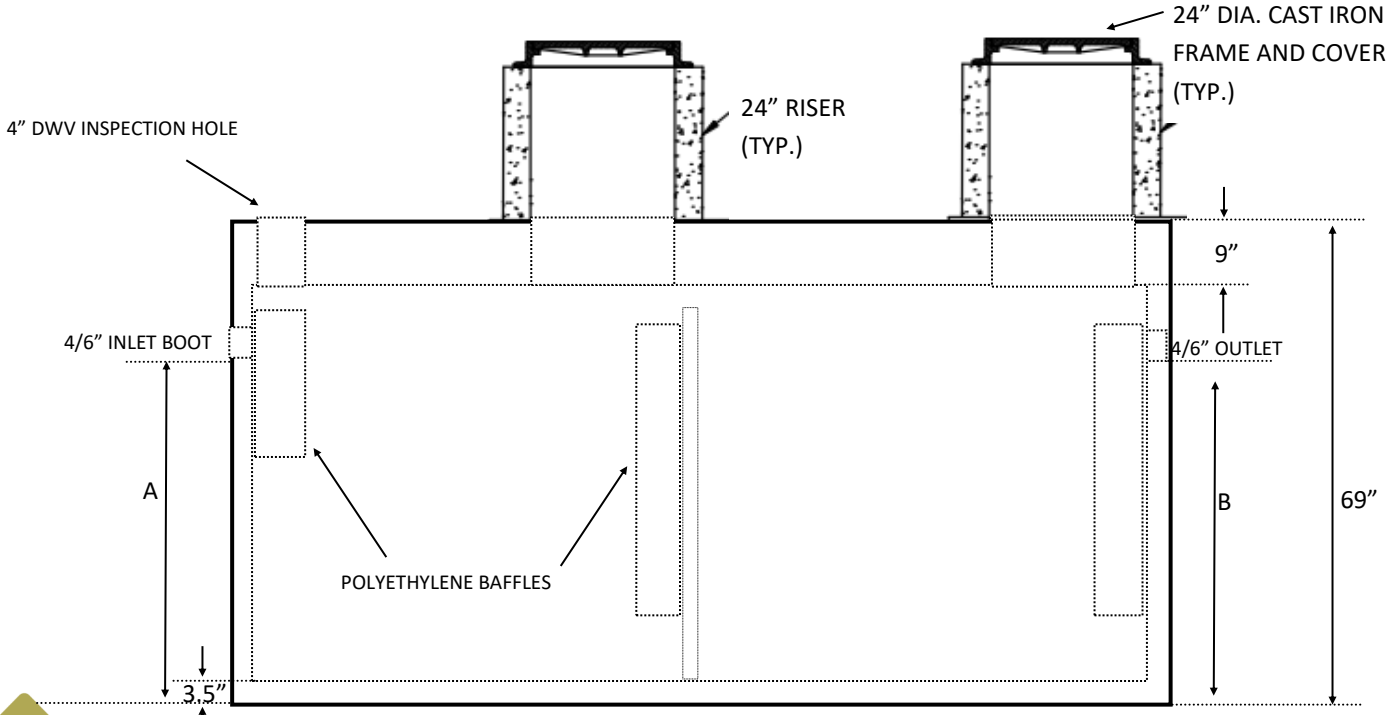

-SECTION-

A = 4” INLET 53” B = 4” OUTLET 50”
A = 6” INLET 52” B = 6” OUTLET 49”

ESTIMATED WEIGHT 21,000bs
GALLONS PER INCH 42

NPCA MEMBER

Schwarr Industries

6 Industrial Way, Denver, PA 17517
p.717.336.6250

PRECAST 2000 GALLON 2 COMPARTMENT GREASE TRAP
REINFORCED LID