ISOBOARD®

ZERO ODP

Premier Thermal Insulation for • Roofs • Ceilings • Floors • Walls

Over Purlin Thermal Insulation

Concealed Fix Roofing

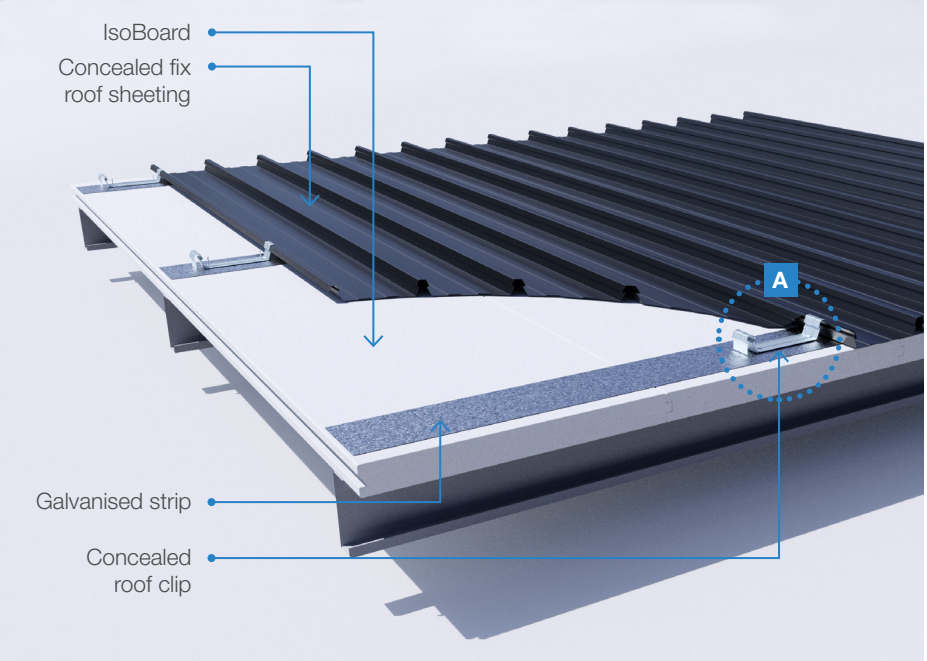

Purlin Spacing limitations for unsupported IsoBoard		
Thickness	**Commercial & Industrial**	**Domestic & Painted Roof Sheets**
30mm	1400mm	1200mm
40mm and thicker	1600mm	1500mm
Where purlin spacing limits are to be exceeded, use T- or H-section supports.		

Over Purlin installation guidelines

- Fix IsoBoard concurrently with roof sheeting.
- Wipe boards with softened water solution immediately prior to installation. This removes any static charges on the board surface resulting from transport and handling, preventing dust particles adhering to the board surface.
- Install boards from roof apex to eave, starting and ending on a purlin, covering at least three purlins per board. Allow 5mm spacing between boards butt-joined over purlins. Butt-jointed or staggered boards may not align longitudinally, due to the board width tolerance.
- Recommended purlin spacings for unsupported IsoBoard are reduced under paint-treated roof sheets due to the higher anticipated roof temperatures, and to meet aesthetic objectives with domestic/residential applications.
- Profiled roofing closures or cover-strips should be used, where damage by birds or vermin to exposed board ends is anticipated.
- The full text of the large-scale fire test is available on the IsoBoard website.
- We recommend that roof ridge air vents are installed for IsoBoard of 40mm or thicker, particularly under painted roof sheets. Roof ridge ventilation prevents excessive deflection through heat build-up above the board.
- Ensure that the top board of a delivered pack is inverted prior to installation. The top board is placed face down to protect the planned visible surfaces when transporting and handling packs. The IsoBoard logo on the board edge should all be vertical when installing.
- IsoBoard can be painted with water-based paints or woodstains. Standard paint colours are available direct from IsoBoard.
- Consult IsoBoard representatives for retro-fit guidelines.

Installation guidelines - Concealed Fix Roofing System

1. Install as per roofing system manufacturers requirements and guidelines.
2. Typically, a galvanized steel strip of 0.8mm x 150mm width is laid over the IsoBoard above the purlin, for the length of each purlin. Concealed fix roofing clips are screw fixed through the galvanized strip and IsoBoard into the purlins. This provides a firm base to anchor the clips without risk of deflection.
3. Roof screws should be of sufficient length to penetrate the clip, IsoBoard thickness, and the purlin/girt to a depth of approximately 25mm.
4. Where purlin spacing spanning limitations are to be exceeded, use T or H section supports.

Pierced Fix Roofing

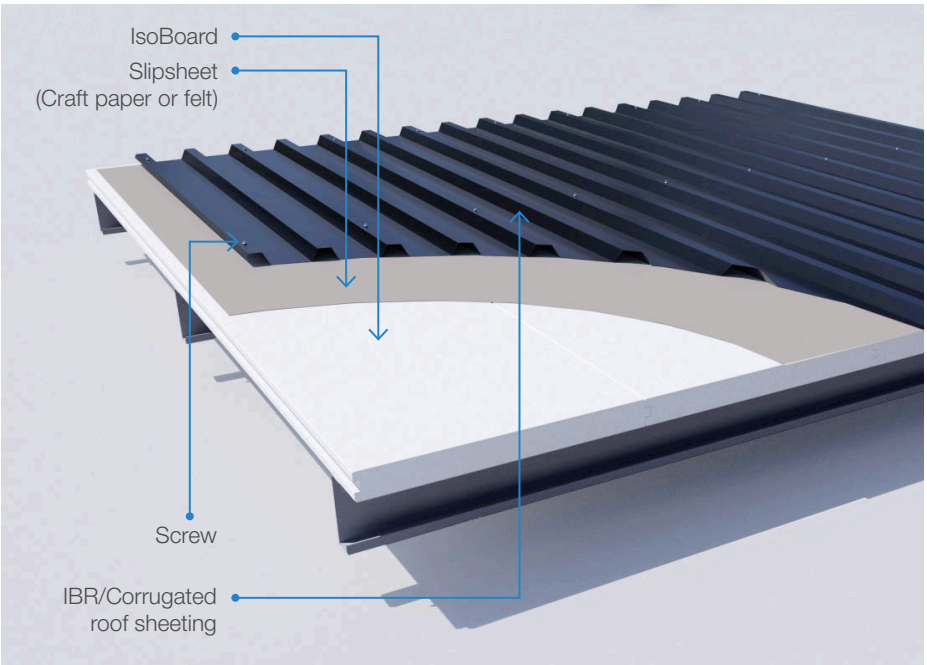

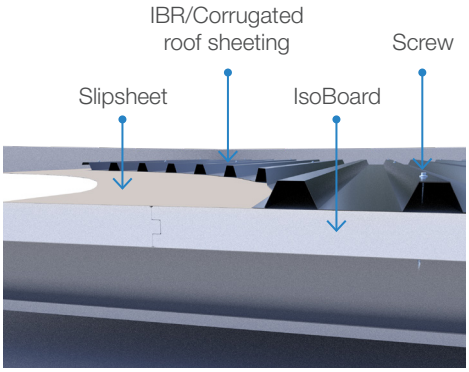

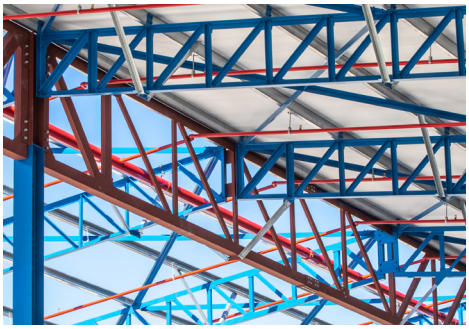

Installation guidelines - Pierced Fix Roofing System

1. To avoid potential friction noises between paint-treated pierced fix roof-sheets and IsoBoard, order IsoBoard with applied slip sheet: felt-fibre slipsheet for residential and commercial applications, and kraft-paper slip sheet for industrial applications.
2. Fix IsoBoard concurrently with roof sheet, positively securing IsoBoard between roof sheets and purlins, using roof screws of sufficient length.

Suggested Bill of Quantity Specification: Over Purlin

IsoBoard high density 32-36kg/m3 rigid extruded polystyrene 100% closed cell insulation board of __ mm thickness and 600 mm width, with tongue and groove joints, fixed concurrently with roof covering to roof sheeting manufacturer's guidelines, over steel purlins at approximately __ mm centres, with 5 mm gap between boards butt-joined on top of purlins.

Apply felt/Kraft paper slip sheet for pierced-fix paint-treated roof systems. Specify square edged board with tongue removed if using T- or H-section supports. Ensure XPS board has correct k-value for compliance with rational design.

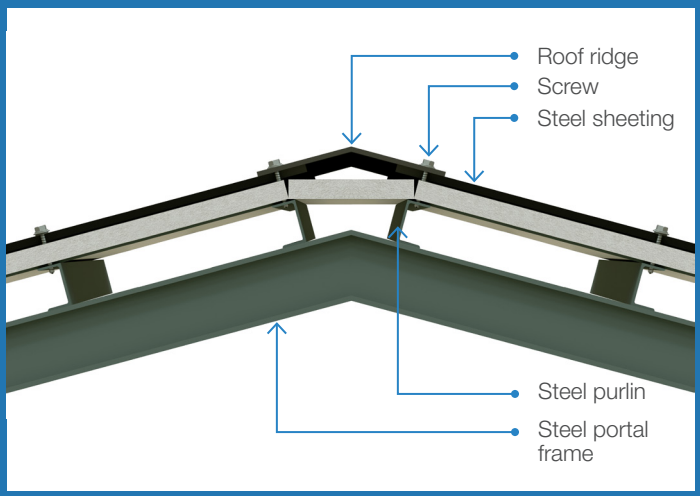

Ridge detail

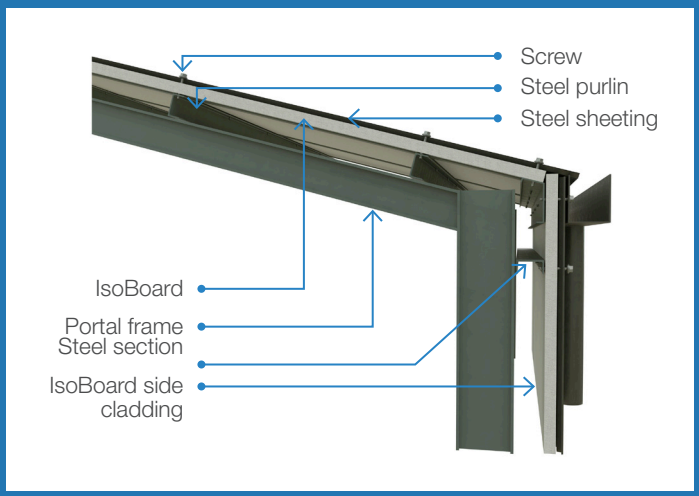

Eave detail

Site Handling Instructions

1. Handle and install with care to prevent damage to board edges.
2. Store boards flat within original packaging until required.
3. Protect from adverse weather conditions and direct sunlight for the storage period.
4. IsoBoard is easily cut to length using a sharp blade or hacksaw.
5. ***In potentially dusty conditions during or after construction, wipe boards clean with a weak softened water solution immediately prior to over purlin installation. This removes possible static charges present on the board surface which attract dirt and dust.***

Contact IsoBoard for any queries with respect to the above.

Ordering IsoBoard

- Standard lengths from 4,8m to 7,2m in 0,6m increments and in 8m for 30, 40, 50 mm boards. Length tolerance ± 5mm. Enquire availability of thicker boards or specific lengths through your representative.
- Standard stock lengths and thicknesses are generally available through your Regional Distribution Centre. Lead time to manufacture is three weeks.
- Order IsoBoard with square edge profile if board is to be supported by T-sections or H-sections.
- Request appropriate slipsheet if specified.
- IsoBoard can be ordered pre-painted.

How to identify IsoBoard:
IsoBoard can be identified by the logo and manufacturing details on the tongue of the board. With the logo as shown, the lower face is the better face for exposed installation.

	R-Value	U-Value
Thickness (mm)	Thermal Resistance (m.°K/W)	Thermal Transmittance (W/m2°K)
30	1,143	0,875
40	1,524	0,656
50	1,905	0,525
60	2,287	0,437
70	2,668	0,375
80	3,049	0,328
90	3,429	0,292
100	3,811	0,262

Thermal Conductivity tested to SANS 8301	
IsoBoard thermal conductivity k value	0.02624 W/m.K - Test result available

Fire Classification: 10400 Part T and SANS 428

IsoBoard B/B1/2 horizontal and vertical / with or without Sprinklers

D&D
ROOF INSULATIONS

HEAD OFFICE: 012 800 3606 | **E-MAIL:** info@roofinsulation.co.za | **WEB:** www.roofinsulation.co.za