selo®

Concealed Frame Doorsets
Riser Doors & Dampers

NEW DESIGN
Outward OR Inward Opening

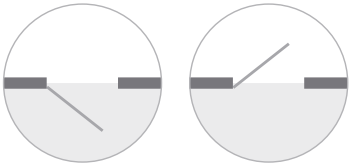

Innova+®

Concealed Frame Doorsets

MAKE AN IMPRESSION WITH

Frameless Pivot doors

FSC certified | Fire-rated EI30Sa | Acoustic reduction | Specification compliant | Specification available | Made in Britain

Detailed product guide

selo
Simplifying bespoke and complex building methods
Proudly working in collaboration with Loyn+Co Architects.
Scan QR to view more Innova+ projects
selo.global/case-studies
LOYN+CO
ARCHITECTS

Innova+

Concealed frame doorsets

What are Innova+ concealed frame doorsets? 4

Introduction

Configurations 7

Gallery 8

Drawings 10

Options

Door leafs 12

Finishes 13

Pivot hinge 14

Skirting 15

Ironmongery 16

Technical

Certifications 17

Ordering checklist 18

Specifications 22

Why Selo? 20

What are **Innova+** concealed frame doorsets?

Selo concealed frame doorset systems make bespoke details standard.

Never has it been easier to conceal the frames on your interior doorsets. Using a uniquely designed system, Selo offers the concealed doorset solution for your contemporary interior.

Innova+
System benefits:

› Contemporary minimalist finish

› Specifications to suit your needs

› Simple step-by-step installation

› Available in a range of finishes

› Supplied as a full doorset

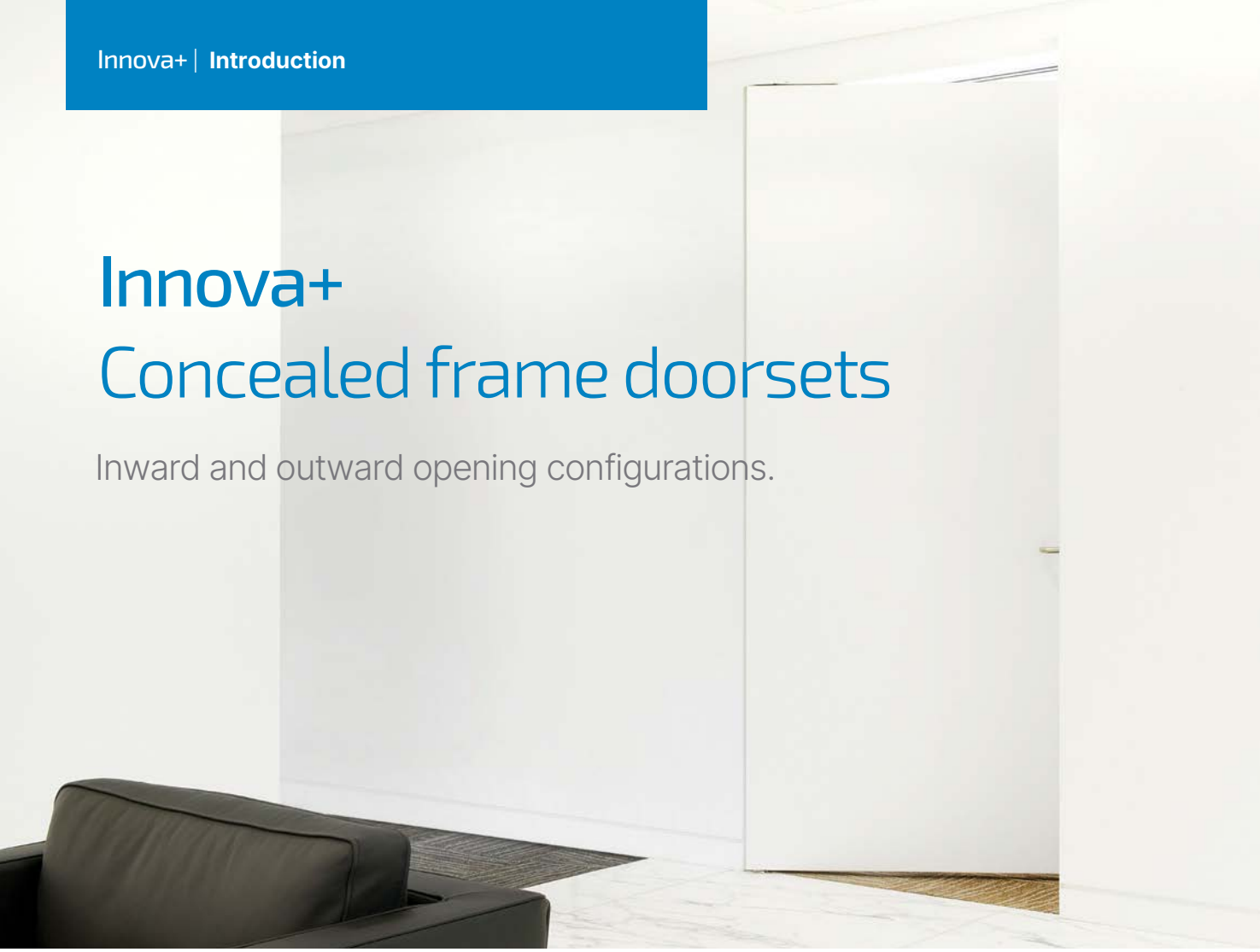

Innova+
Concealed frame doorsets

Inward and outward opening configurations.

The Innova+ pivot hinged doorset provides a flush-finish, high specification solution for high-end developments.

The Innova+ can be configured to open out, like a standard door, but also open inwards so when viewed from the flush side, the door opens inwards, away from you.

This complements the other Selo systems; Arriva and Enigma pocket doors to provide you with a range to fulfill your design criteria and aspirations whatever your situation or door configuration.

The Innova+ system utilises a split frame which clips together around the finished wall construction (such as stud and plasterboard). The side flanges are perforated for easy fixing. The wall and jamb are then plastered or jointed over for a continuous surface right up to the door.

Scan QR to read more
selo.global/**Innova**

Innova+ Configurations

Innova+
Outward opening

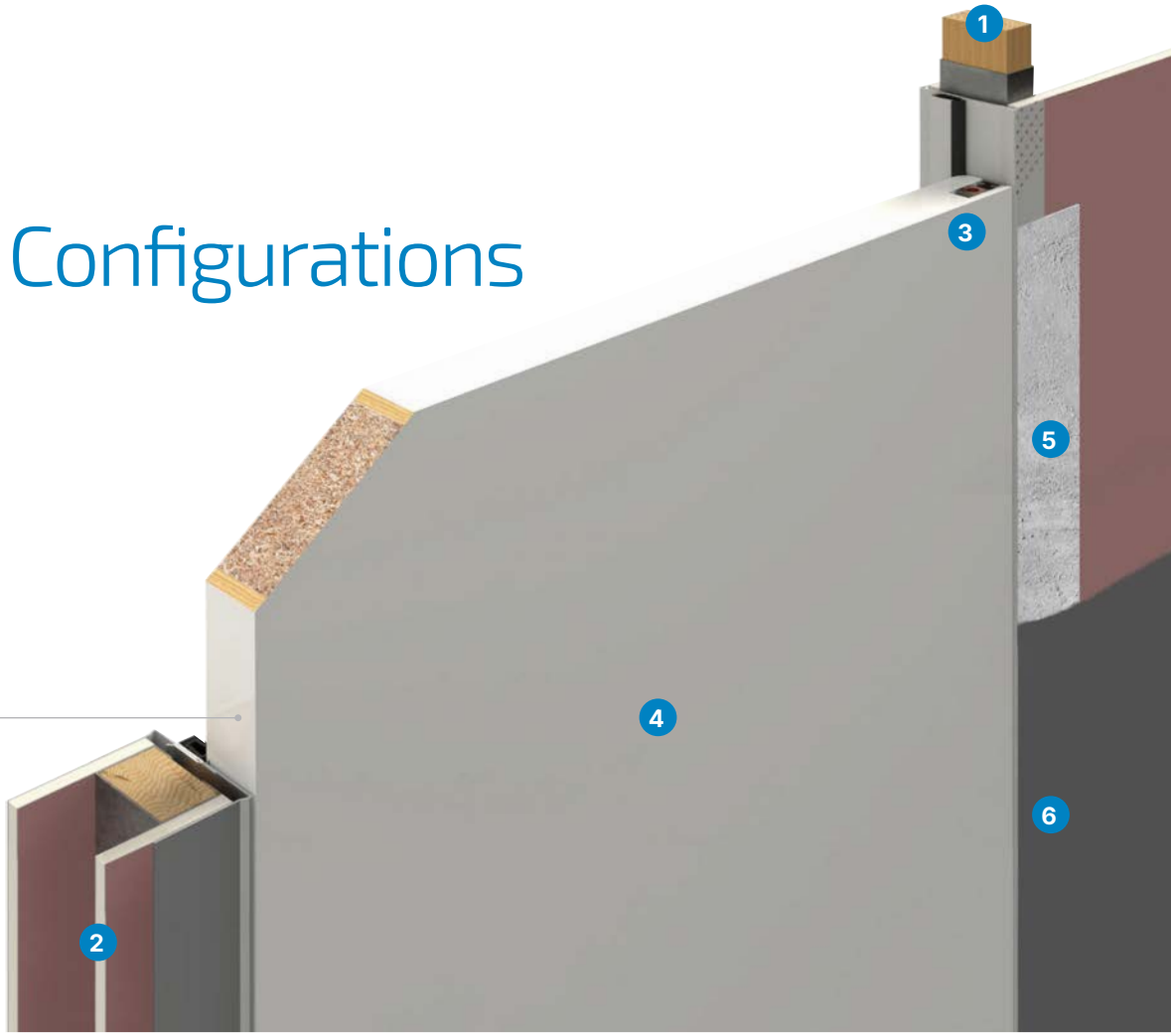

1 **Stud**

2 **Plasterboard**

3 **Pivot hinge socket**

4 **Door leaf**

5 **Jointing compound/skim**

6 **Painted wall**

Innova+
Inward opening

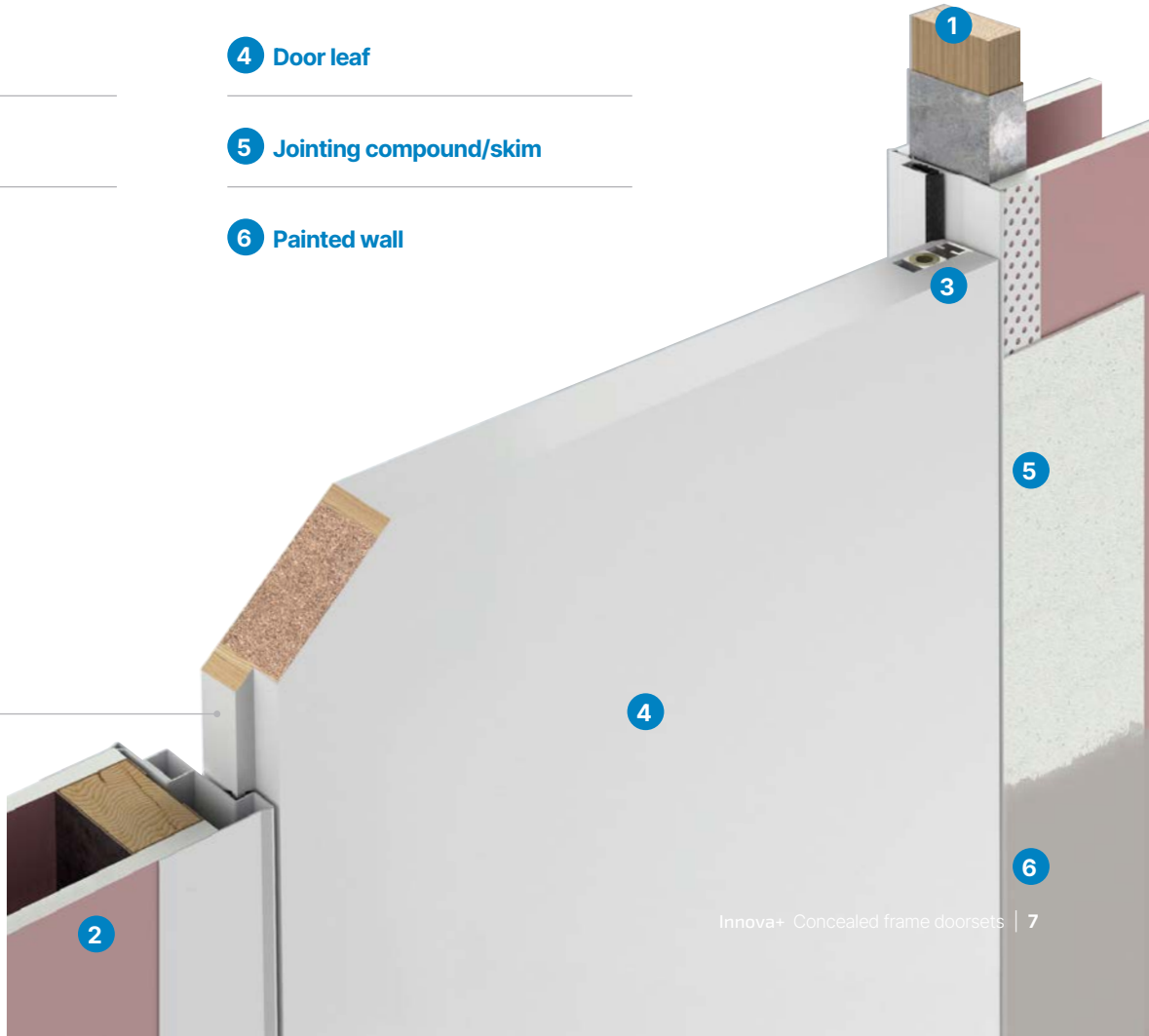

Innova+ Gallery

Designed for a sleek, modern finish.

Scan QR to view see more
selo.global/**case-studies**

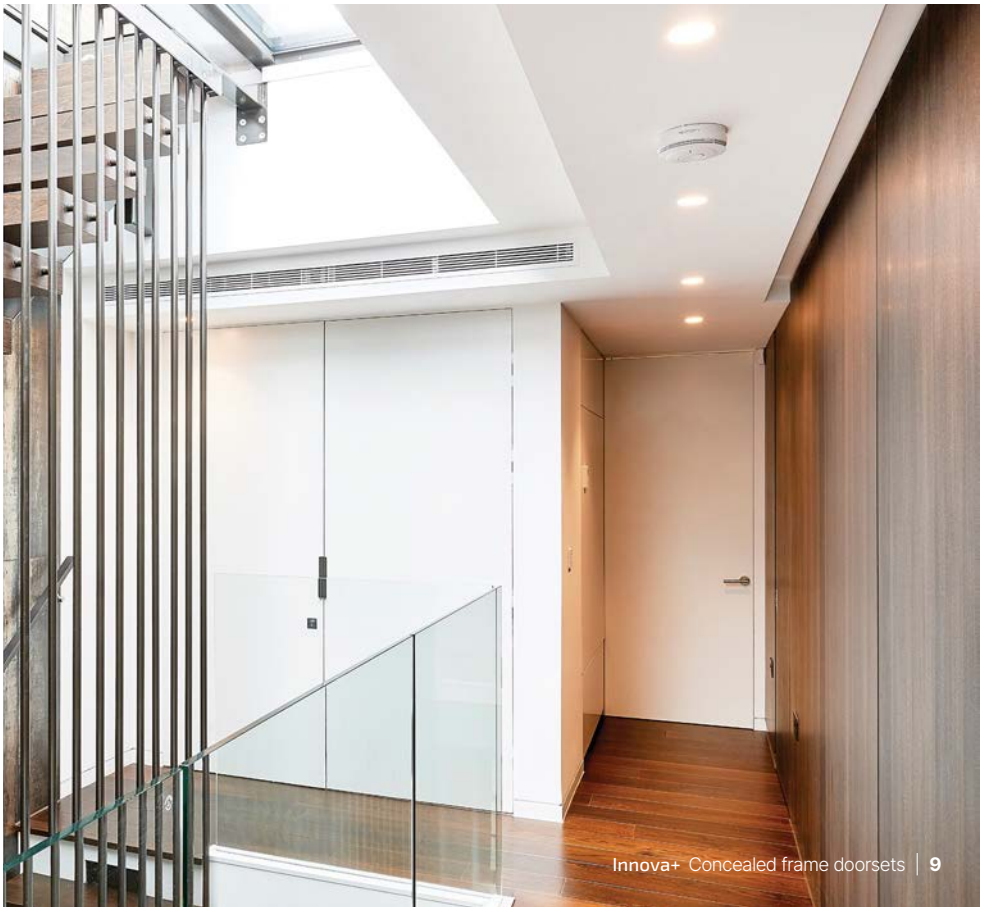

Innova+ Drawings

Whether configured to open-out, like a standard door, or open-inwards the wide range of sizes available make Innova+ a highly versatile, configurable doorset designed to any application.

Innova+
Outward opening

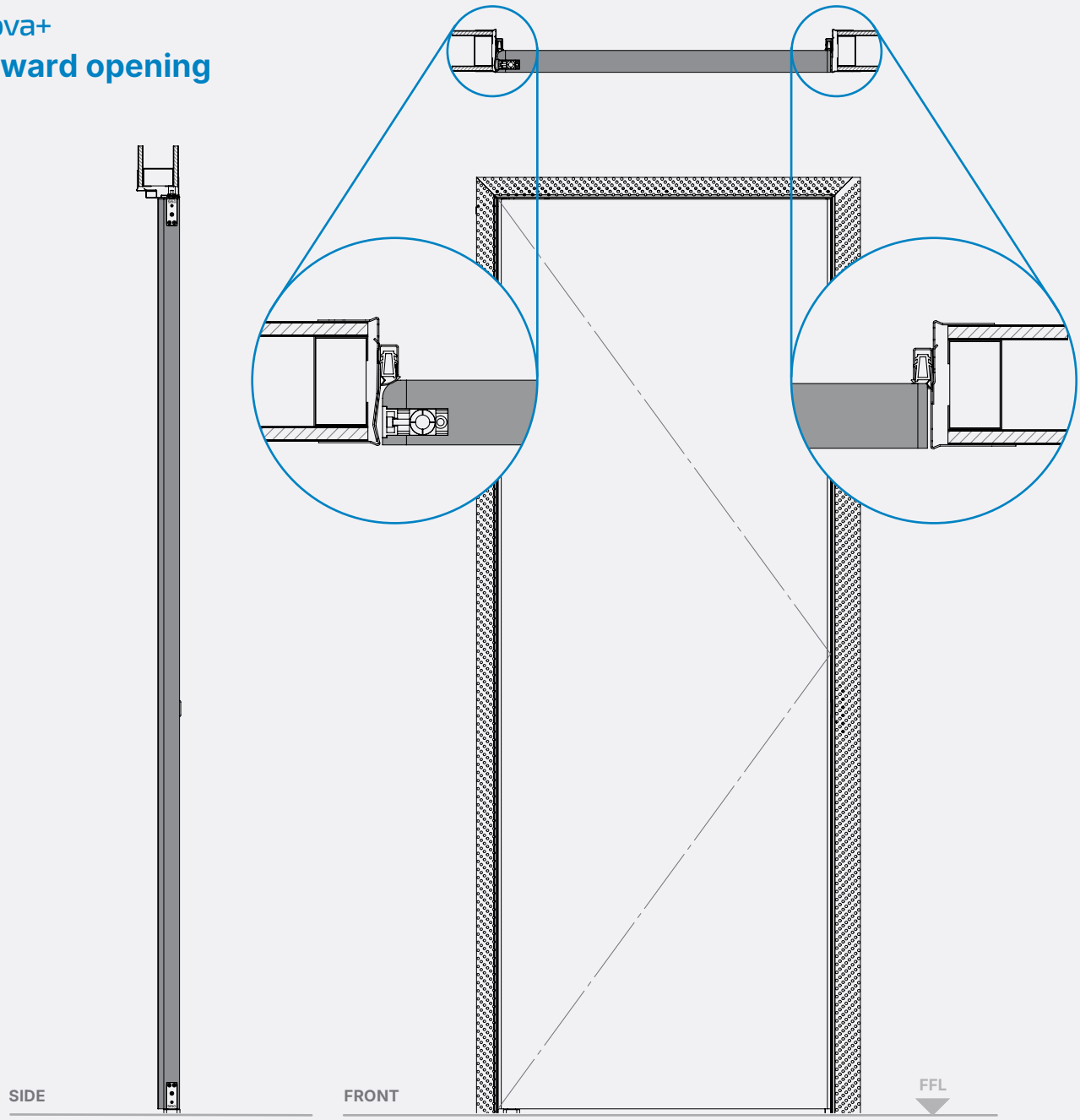

Minimum sizes	W	H	Maximum sizes	W	H
Single door	400mm	1500mm	Single door	1100mm	2700mm

PLEASE NOTE

Before specifying any fire rated sizes, please consult with Selo to ensure they are covered.

If you require a door size outside of these parameters, contact the team to discuss.

Scan QR to view technical information

selo.global/**Innova-technical**

Innova+
Inward opening

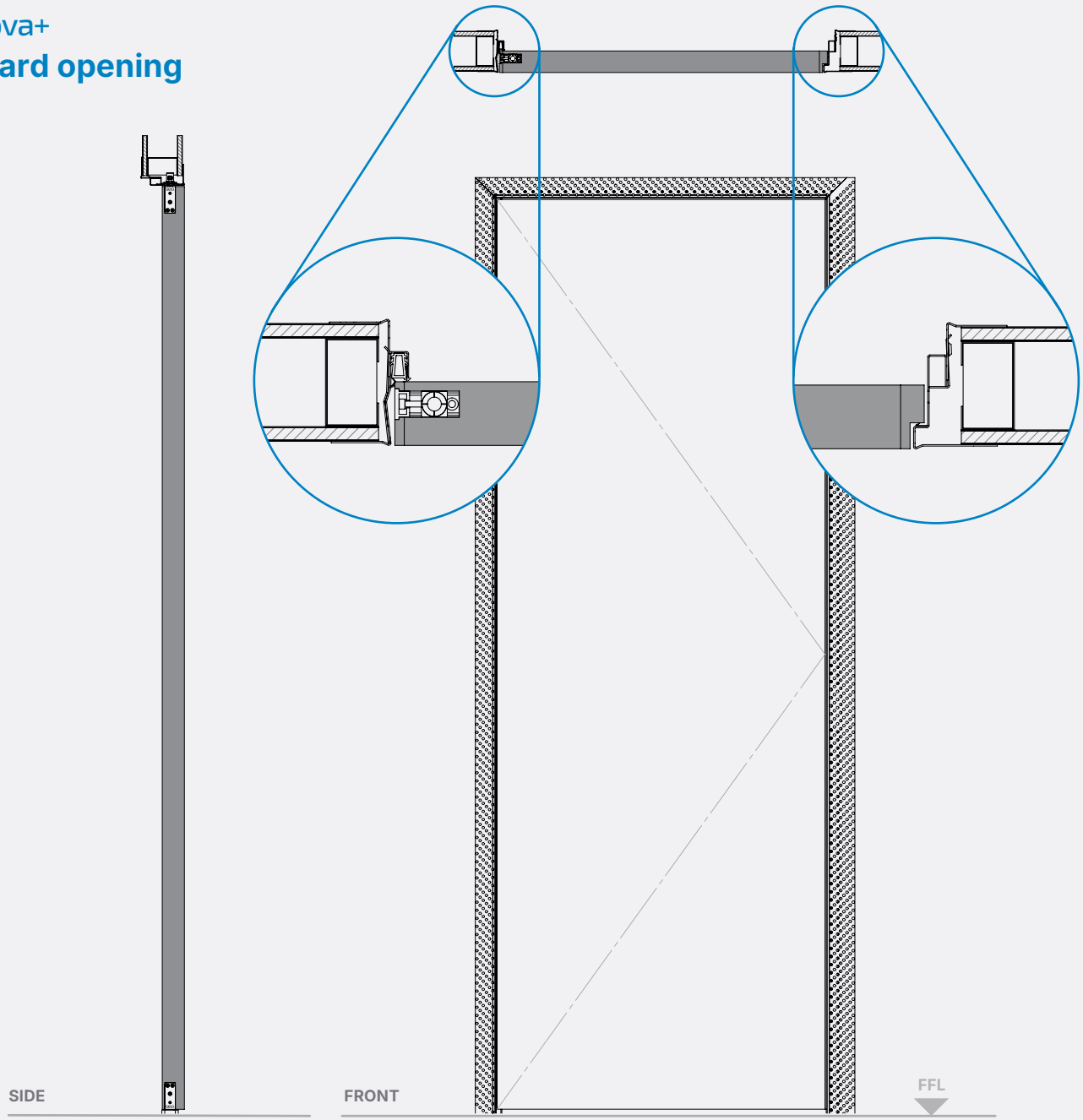

Innova+ Door Leafs

Innova+ door leafs are manufactured from high-density solid timber core using the latest CNC technology.

FSC
www.fsc.org
FSC® C112986
The mark of responsible forestry

Door leaf detail

Innova+ doors are made to suit every individual order, taking into account size, quantity and finish. The doors are cut out of their original core size and then calibrated for a smooth surface to take the next stage of preparation. They are then lipped with hardwood and veneered with an opaque kraft paper to conceal the lippings and give a completely smooth finish ready for final painting. Alternatively, the doors can be veneered to suit your requirements.

Using our technologically advanced CNC machinery, the doors are cut out for hinges, seals and other ironmongery where required before being palletised and sent to site 'ready to fit'.

Specifications

› 54mm Halspan Optima	35 kg/m²
› Max width	1100mm
› Max height	2700mm

Innova+ Finishes

The metal frame and timber door leaf can be provided in a variety of different finishes.

Frame finishes

The frames are manufactured from high-performance steel and can be provided in two finishes:

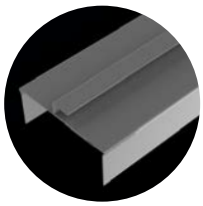

Unfinished for site painting

The frame is pre-etched and simply requires a metal primer to be applied to the frame before painting.

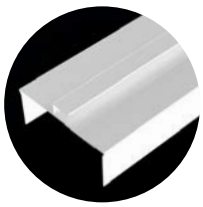

Powder-coated

The frame can be pre-finished in a polyester powder-coated finish to a standard RAL colour.

Door leaf finishes

Textured

Provided pre-primed for painting on site.

Pre-finished paint

The door leafs can be provided pre-painted to a standard RAL colour.

Veneered

Any species of timber veneer lacquered in a 30% clear sheen.

Laminate

Laminate coating for a more robust finish.

Innova+ Pivot Hinge

Specifically designed for the Innova+ system, the Innova+ pivot hinge enables a smooth door swing.

Hinge details

Manufactured from stainless steel with self-lubricating phosphor-bronze inserts fitted to the sockets, providing maintenance-free usage. The hinges are adjustable allowing easy door leveling.

The hinge is provided pre-fitted to the head of the Innova+ frame and the door leaf is provided with cut-outs for the sockets. The base pin is mounted onto the floor. No floor box is required and the pin is completely concealed.

Self-closing options

A. Inward opening floor-spring

The floor-spring is available with a standard cover plate. Alternately, if you want to enhance the aesthetics, it can be provided with a floor tray. This is infilled with the surrounding floor finish to disguise the floor spring.

B. Outward opening overhead-closer

The overhead-closer is integrated into the door and frame, providing a highly discreet option.

Innova+ Skirting

Different skirting options can be used with Innova+.

Surface-mounted skirting

A standard surface-mounted skirting can be applied in the usual fashion. The skirting needs to finish at the edge of the frame.

Flush skirting

A flush skirting can also be used. This will need to be specified to ensure the frames are prepared to suit this detail.

Innova+ Ironmongery

Standard handles and locks or latches can be used with Innova+ so you're able to tailor the design to your particular project.

Lock and latch preparation

The frame is prepared to receive the lock or latch that will be used in the door. Almost all standard lock and latch types are compatible with the frame.

The strike plate is pre-fitted to the frame, the actual lock or latch is not.

Strike plates

› The strike plate is provided in stainless steel as standard although other finishes may be specified

› Provided with a pre-fitted lock keep insert

› The strike plate is flush-mounted into the frame

Innova+ Certifications

Read about Selo safety testing
selo.global/**product-testing**

Official Innova+ technical details.

FIRE RATING

Certification for Single Doors

Inward and outward opening

› **Fire tested to BS EN 1634-1**

› **EI30Sa Certified**

EI30Sa

ACOUSTIC

Certification for Single Doors

Inward opening NFR

› **18dB**

Outward opening NFR

› **20dB**

Inward opening EI30Sa

› 54mm Halspan Core
DS Intumescent on 3 sides **23dB**

› 54mm Halspan Core
DS Intumescent (3-sides) +Seal & Threshold Plate **29dB**

Outward opening EI30Sa

› 54mm Halspan Core
DS Intumescent (3-sides) **25dB**

› 54mm Halspan Core
DS Intumescent (3-sides) +Seal & Threshold Plate **31dB**

Innova+ Ordering Checklist

A quick checklist to assist you in the specification and ordering of your Innova+ concealed frame doorsets.

1 Innova+

Inward Opening

Outward Opening

2 Door No. or Reference

Door Number

Reference

3 Size

Width & Height

4 Hinge Type

Innova+ Pivot (Standard)

Innova+ Pivot Floor-spring Self-closer

Innova+ Pivot Overhead Self-closer

5 Frame Finish

Textured (For site painting)

Powder-coated to RAL

6 Door Finish

Textured (For site painting)

Pre-finished (Specify RAL)

Timber Veneer (Specify Type)

Laminate (Specify Type & Colour)

7 Lock/Latch

Specify Type & Size

Need assistance?

Call 020 3880 0339 or email sales@selo-uk.com to discuss your project requirements or to arrange a visit from one of our experienced project leaders.

8 Vision Panel

Vision Panel
(Specify Type & Size)

9 Skirting Detail

Specify
Type & Size

10 FSC Certified

Specify if required

11 Fire-rating

NFR

EI30Sa

12 Seal

Smoke Seal

13 Acoustic Rating

Inward - 18dB / 23dB / 29dB
Outward - 20dB / 25dB / 31dB

14 Handing (Single Doors)

Right-hand (RHS)
Open-in

Left-hand (LHS)
Open-in

Right-hand (RHS)
Open-out

Left-hand (LHS)
Open-out

Why **Selo**?

Since 2008 we've consistently explored opportunities to **simplify bespoke and complex building methods** with dependable systems; delivering consistent premium outcomes. There are three key areas in which we provide particular value, these are our **brand promises**:

INNOVATE

A legacy of industry-leading innovation

Our legacy stems from an in-depth knowledge of the building industry and the realisation that many construction processes can be improved. From the outset, we identified that high-end finishes demand a bespoke approach for every project. We set out to simplify that with standardised systems.

The results speak for themselves:

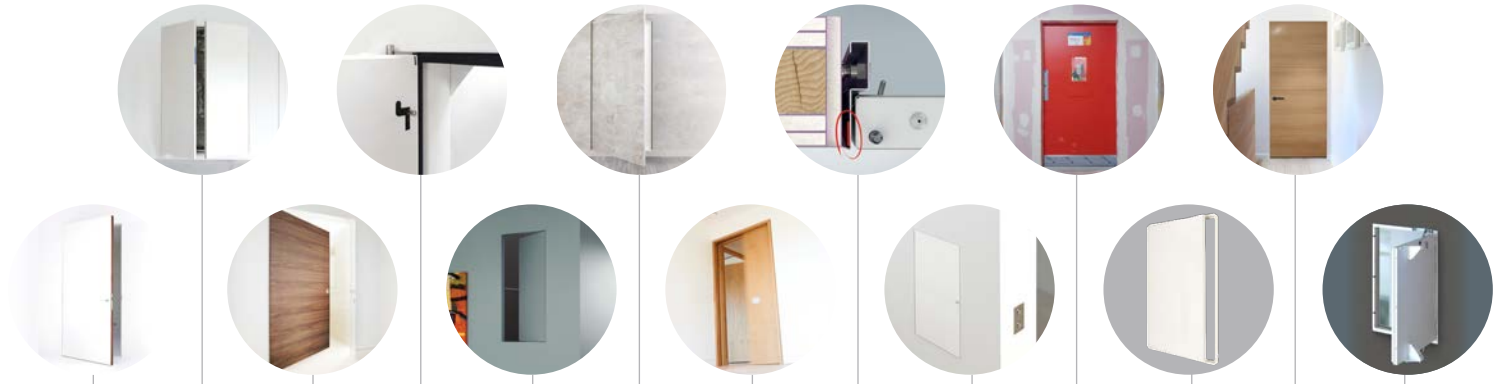

2008
Off-the-shelf concealed-frame doors to the uk

2010
Created the 'riser door' concept enhancing access

2011
Innova® our first inward-opening concealed door

2012
Developed the pivot hinge for riser doorsets

2015
Fuma® our first-ever concealed frame aov

2017
Ligna® riser doors for tiled or decorative plastered walls

2019
Enigma® launches as an independent pocket door brand

2020
Quench® pre-intumescent fire-stopping system

2021
Quadra+® Lift Shaft fire-rated concealed access

2022
Tempus® E60 steel temporary fire doors

2023
Rida+® E30Sa budget fire-rated riser door

2024
FumaCE® concealed, CE-certified smoke damper

2024
Innova+® framless internal pivot doors

Read more about Halo Assist
selo.global/**project-assistance/**

SUPPORT

Detailed project assistance at every stage

Support that surrounds every project. Three clear stages with a proven process at every stage. Expertise that ensures everything works out as intended.

Concept

We assess concept designs and provide detailed advice to ensure that design aspirations can be achieved both aesthetically and construction-wise, and that all compliance requirements are fulfilled.

Specification

We provide in-depth support during project specification, securing the necessary compliance certification and confirming the cost schedule. When required, we visit sites to ensure that all detail is accounted for.

Execution

On receipt of a confirmed order, we assign a dedicated Project Manager to oversee successful production, delivery and installation. We'll visit your site to go through the schedule, provide an install demo, and conduct a compliance review.

PROTECT

Reduce every potential risk to a minimum

In an industry where discrepancy or failure can have significant safety, cost or legal implications, we're committed to reducing every element of risk that we can.

DEPENDABLE

Experience

With extensive experience of large-scale, complex projects, we can be relied upon to manage complex schedules and deliver on time.

FAULTLESS

Compliance

Our technical team includes experts in fire safety and certification, with direct experience of fire testing. We understand the legislative requirements and can support you to achieve them.

TECHNICAL

Expertise

The breadth of professional training and practical knowledge within our team is applied to every bespoke detail helping to improve standards and streamline processes.

Innova+ Specifications

These specifications are available as a download from www.selo.global or contact the team for assistance with writing your specification 020 3880 0339.

NBS

Specification compliant

Product name	Innova+
Manufacturer	Selo **tel** 020 3880 0339 **email** sales@selo-uk.com www.selo.global
Door size	Custom. All Innova+ doorsets are made to order.
Frame material	Folded mild steel
Door material	Particle board
Door thickness	54mm (non fire rated and EI30Sa)
Finishes	Frame: › Unfinished for site painting › Powder-coated to a standard RAL Door: › Primed for site painting › Pre-finished to a standard colour › Timber veneered with clear lacquer › Laminate
Hinges	**Pivot hinge** Finish: › Satin Stainless Steel **Innova+** Pivot hinge with Self-closing floor-spring Finish: › Satin Stainless Steel **Innova+** Pivot hinge with Self-closing Over-head Closer Finish: › Satin Stainless Steel
Locks/latches	The frame can be prepared for all standard locks and latches. The latch plate and insert for the frame is provided only, not the lock or latch itself Flush handles are recommended
Acoustic rating	Inward - 18dB / 23dB / 29dB Outward - 20dB / 25dB / 31dB
Vision panel	Specify size Clear / Satin etched
Fire rating	Non fire rated / EI30Sa
Smoke seal	As standard
Specification tools	› NBS Specification › CAD drawings › Contact the sales team to request a full specification

© 2024 by Selo. All rights reserved.

No part of this publication may be reproduced in any material form without the written permission of the copyright owner. Application for the copyright owner's permission to reproduce any part of this publication should be addressed to Selo.

Where colour and finish samples are shown within this document limitations in the reprographics process mean absolute colour accuracy cannot be guaranteed. Where colour matching is critical, a sample of the material can be provided on request.

Selo reserves the right to alter specification and designs without prior notice.

Rev 1.3 - December 2024

SEL-MRK-00001

Creating beautiful, contemporary interiors

call 020 3880 0339
email sales@selo.global

Scan QR to visit our website
selo.global

EXCLUSIVE PRODUCT INNOVATIONS:

Riser Doorsets

Quadra+ | Ligna | Una

High performance doorsets to conceal unsightly riser doors in corridors and access areas.

Concealed Frame Doors

Arriva | Innova+

Frameless doorsets for high-end residential properties to enhance contemporary interiors.

Nulfire

Fire-compliant door sets within wall-lining systems

Enabling Quadra+ Riser Door system to be installed in projection to rigid supporting construction.

Nulfire is not compatible with Rida.

Concealed Smoke Damper

FumaCE

Concealed single blade smoke control corridor damper CE marked to BS EN12101-8:2011.

Temporary Fire Doors

Tempus

Designed to withstand the rigours of a construction site whilst maintaining fire compliance.

Sliding Pocket Doors

Enigma

Utilise every square inch of your room with the No.1 Pocket Door with limitless design options.

selo®

call 020 3880 0339
email sales@selo.global
www.selo.global

Selo
K2 Kents Hill Business Park Timbold Drive
Milton Keynes MK7 6BZ

MADE IN BRITAIN

Follow us on: