# Homewood Board of Zoning Adjustments

**Meeting Agenda**
**Thursday, October 6, 2022, 6:00 P.M.**
**City Council Chamber**
**2850 19TH Street South, 2nd Floor**
**Homewood, Alabama 35209**

Persons who are unable to attend the meeting may view the proceedings on-line by clicking the link in Option 1, or by following the instructions in Option 2 or Option 3. **Please note that public comments cannot be made by persons viewing through Zoom.**

Option 1: Click to Connect to Zoom or www.cityofhomewood.com/upcoming-meetings
Option 2: Zoom App - Meeting ID#: 883 5766 5513 | Passcode: 514257
Option 3: By phone: 312-626-6799

Persons who wish to comment during the meeting may only do so in person. Comments in support or opposition, may be submitted via email to the Department of Engineering & Zoning by clicking the following link: *www.cityofhomewood.com/engineering-zoning* or to the Secretary to the Board of Zoning Adjustments at fred.goodwin@homewoodal.org. Comments may also be hand delivered to the Department of Engineering & Zoning, located on the 4th floor of Homewood City Hall. Please include the address or case number and submit them no later than 24-hours prior to the meeting.

---

**Board Members**

Chair, Matthew Foley, Ward 5
Vice-Chair, Meghan Hand, Ward 4
Houston Wurtele, Ward 1
Scott Alsabrook, Ward 2
Michael Pirkle, Ward 3

**Supernumeraries**

Stuart Roberts
John Geer

**Order of Business**

I. ***Call to Order***
II. ***Roll Call***
III. ***Minutes Approval – September 1, 2022***
IV. ***Communications/Reports from Chair & Vice Chair***
V. ***Old Business***
VI. ***New Business***

1) ***SV-22-10-01, 1520 Beckham Drive, Parcel ID No.: 29 00 12 4 009 017.000***
***Applicants / Property Owners: Daniel & Tammy Compagno***
*A request for a variance to Article V, District Development Criteria, Sec. D. Accessory structures, (3), to allow the placement of an accessory structure (deck) in the secondary front yard of a corner lot.*

The Agenda of the Board of Zoning Adjustments is subject to change prior to the scheduled meeting. The Board Chair reserves the right to vary the order of the meeting, if warranted. Questions regarding the agenda and meeting may be directed to the Department of Engineering and Zoning at (205) 332-6854.

2) ***SV-22-10-02, 201 Morris Blvd., Parcel ID No.: 29 00 14 4 008 001.000***
***Applicant / Property Owner: Sarah Merkle***

a. *A request for a variance to Article IV, District Uses, Sec. A., NPD Neighborhood Preservation District, d. Setbacks, 1. Front, to reduce the setback along the secondary front property line from 10-feet to 7.8-feet, for a total reduction of 2.2-feet, to allow for the construction of an addition to an existing, non-conforming single-family dwelling.*

b. *A request for a variance to Article IV, District Uses, Sec. A., NPD Neighborhood Preservation District, d. Setbacks, 2. Side, to reduce the setback along the right-side property line from 10-feet to 6.8-feet, for a total reduction of 3.2-feet, to allow for the construction of an addition to an existing, non-conforming single-family dwelling.*

3) ***SV-22-10-03, 227 Oglesby Avenue, Parcel ID No.: 29 00 13 3 016 001.000***
***Applicants / Property Owners: Ramey & April Harrell***
*A request for a variance to Article IV, District Uses, Sec. A., NPD Neighborhood Preservation District, d. Setbacks, 1. Front, to reduce the setback along the secondary front property line from 10-feet to 6-feet, for a total reduction of 4-feet, to allow for the construction of a roof above an existing uncovered deck.*

4) ***SV-22-10-04, 316 East Glenwood Drive, Parcel ID No.: 29 00 13 1 020 016.000***
***Applicants / Property Owners: Warren & Katherine Stewart***
*A request for a variance to Article IV, District Uses, Sec. A., NPD Neighborhood Preservation District, d. Setbacks, 2. Side, to reduce the setback along the right-side property line from 10-feet to 9.6-feet, for a total reduction of .4-feet (5-inches), to allow for the construction of an addition at the rear of an existing, non-conforming single-family dwelling.*

5) ***SV-22-10-05, 190 Vulcan Road, Parcel ID No.: 29 00 14 3 004 004.001***
***Applicant: Caprine Engineering / Property Owner: Hussein Mawani***

a. *A request for a variance to Article VII. Off-Street Parking and Loading Requirements, Sec. M., Required Parking Spaces for Individual Uses, to reduce the number of required parking spaces for an automobile dealership in the C-5 General Business Zoning District from 160 to 106, for a total reduction of 54 spaces.*

b. *A request for a variance to Article XI Tree Protection and Landscape, Sec. I, Other Landscaping Requirements, 3. Interior Island Landscape Area*

*Requirements, to eliminate landscape islands between every 10 parking spaces with the required number of trees being distributed throughout the site.*

c. *A request for a variance to Article IV, District Uses, Sec. Q, C-5 General Business District, (3)(b), to permit the outside storage of vehicles for sale in parking spaces currently existing within the building setback.*

6) ***SV-22-10-06, 320 Oxmoor Road, Parcel ID No.: 29 00 14 4 004 006.000***
***Applicant: Homewood Hardware, LLC., Jason Russell***
***Property Owners: High Cotton Palisades, LLC, High Cotton Shoals, LLC & Pharo Palisades I, LLC***
*A request for a variance to Article V. District Development Criteria, Sec. A. Quantitative Development Criteria, Table 1, to reduce the setback along the secondary front from 35-feet to 3-feet for a total reduction of 32-feet, to allow the construction of a covered, semi-dry outdoor storage area.*

## VII. Adjournment

***NOTE**: Prior to the scheduled public hearing, a brief work session will be held for the Board members beginning at 5:30 p.m. in the City Council's Committee Workroom located on the 2nd floor behind the Council Chambers.

COMPLETE AND SUBMIT
PRIOR TO THE DEADLINE DATE

City of Homewood
**Board of Zoning Adjustments**
**Request for Variance**

[X] **VARIANCE** [ ] **APPEAL**

**ADDRESS OF PROPERTY:** 1520 Beckham Drive, Homewood, AL

**BZA CASE # (assigned by city staff):** SV # 22-10-01

**APPLICANT INFORMATION**

Name of Applicant (s): Daniel & Tammy Compagno

Address of Applicant(s): 1520 Beckham Drive

Homewood AL 35209
City State Zip

Telephone Number(s) of Applicant(s): Redacted by City Staff

Email : Redacted by City Staff

Property Interest of Applicant(s): Owner
(i.e., owner, contract purchaser, agent, architect, contractor, developer, etc)

**OWNER INFORMATION** – ***If different from Applicant***

Name of Owner(s): N/A

Address of Owner(s) (**ONLY** if address is different from property address) otherwise put <u>same</u>:

City State Zip

Email :

Telephone Number(s) of Owner(s):

**DESCRIPTION, USE AND ZONING OF PROPERTY** (Parcel ID & present zoning can be filled out at time of application submittal)

PARCEL IDENTIFICATION NUMBER: 29-00-12-4-009-017.000

PRESENT USE: _____ vacant X residence

N/A commercial (describe):

N/A other (describe):

PRESENT ZONING (per current City map):

COMPLETE AND SUBMIT
PRIOR TO THE DEADLINE DATE



**PLEASE STATE HARDSHIP** – for guidance, see "*What is a Variance*" on page 1 of instructions page:

We want to build a deck in the back yard. The property slopes and is a corner lot. A 6' fence surrounds the back yard. – The steps from the screened porch are wood; the steps turminate on a concrete slab; there are concrete steps that go down to the requested deck.

Hardship: If all materials were wood (steps, slab & deck), then the deck would constitute an addition instead of an out structure.

I understand the change to the Fence Ordinance will eliminate this situation as an issue.

The current zoning ordinance does not allow an accessory structure in a secondary front yard. As such, I am requesting a variance for the proposed deck.

**PURPOSE OF VARIANCE**

A variance is requested on the property described below in conformity with the powers vested in the Board to permit:

___ the construction of an addition to a residence,
___ the construction of residence,
___ the construction of an addition to a commercial structure,
___ the construction of a commercial structure,
X other (describe): out structure in back yard.

COMPLETE AND SUBMIT
PRIOR TO THE DEADLINE DATE



## INDICATE THE FOLLOWING

***The following information can be completed when applying but applicant must bring a survey to verify:***

| | *Required by Zoning Regulations | Setback dimensions As they **NOW** exist | Setback dimensions **AFTER** construction | FINAL Setback Variance Requested |
|---|---|---|---|---|
| Front Bldg. Setback Street: | | | | |
| Front Bldg. Setback Street: (secondary - corner lot) | | | | |
| Right Bldg. Setback | | | | |
| Left Bldg. Setback | | | | |
| Rear Bldg. Setback | | | | |
| Accessory Structure Setback: side/rear | | | | |
| | As Required | Existing NOW | Proposed | Variance Required |
| Lot Area | | | | |
| Lot Width | | | | |
| Parking | | | | |
| Height of Structure | | | | |
| Lot Coverage | | | | |

***For required setback information, please refer to the Zoning Ordinance Book, which is available on the City of Homewood website. If you need to find out how your property is zoned, please contact the zoning department by calling 332-6828 or 332-6854 or by clicking on the following link to email: Zoning Information.**

*The undersigned hereby grants permission for a sign, advertising the BZA hearing date, time and place to be posted on my property. I (we) attach $100.00 application fee and promise to pay any additional costs billed separately for extra items related to this variance request.*

*I (we) certify that all of the above statements and the statements contained in any paper of plans submitted herewith are true to the best of my (our) knowledge and belief.*

Redacted by City Staff

Signature of Applicant — Date 8/10/2022

Signature of Owner — Date

Signature of Owner — Date

# City of Homewood BZA Case Map

**1520 Beckham Dr.**

**SV 22-10-01**

**Aerial Photo**


Subject Property

Parcels

N

0 20 40 80 Feet

THE INFORMATION ON THIS DRAWING WAS COMPILED FROM SERVERAL SOURCES AND SHOULD ONLY BE USED FOR GEREAL INFORMATION AND ORENTATION. THIS DRAWING IS THE PROPERTY OF THE CITY OF HOMEWOOD AND ITS USE BY ANYONE FOR ANY PURPOSE OTHER THAN THAT SPECIFICALLY AUTHORIZED BY THE CITY OF HOMEWOOD IS PROHIBITED.

ZONING IS SUBJECT TO CHANGE. PLEASE CALL ZONING OFFICE TO CONFIRM ZONING. 332-6828

LEGEND

| | |
|---|---|
| ASP | ASPHALT |
| BLDG | BUILDING |
| CALC | CALCULATED |
| MEAS | MEASURED |
| CH | CHORD |
| LNG | LONG CHORD |
| d | DEFLECTION |
| Δ | DELTA |
| ESMT | EASEMENT |
| HW | HEADWALL |
| MIN | MINIMUM |
| MH | MANHOLE |
| OH | OVERHANG |
| POR | PORCH |
| R | RADIUS |
| R.O.W. | RIGHT OF WAY |
| SAN | SANITARY |
| STM | STORM |
| UTIL | UTILITY |
| AC | ACRES |
| S.F. | SQUARE FEET |
| ℄ | CENTERLINE |
| A/C | AIR CONDITIONER |
| ● | POLE |
| >—— | ANCHOR |
| —x— | FENCE |
| —\\— | POWER LINE |
| PVMT | PAVEMENT |
| W/ | WITH |
| TAN | TANGENT |
| RES | RESIDENCE |
| aLGT | LIGHT |
| COV | COVERED |
| | DECK |
| | CONCRETE |
| | WALL |

EXISTING

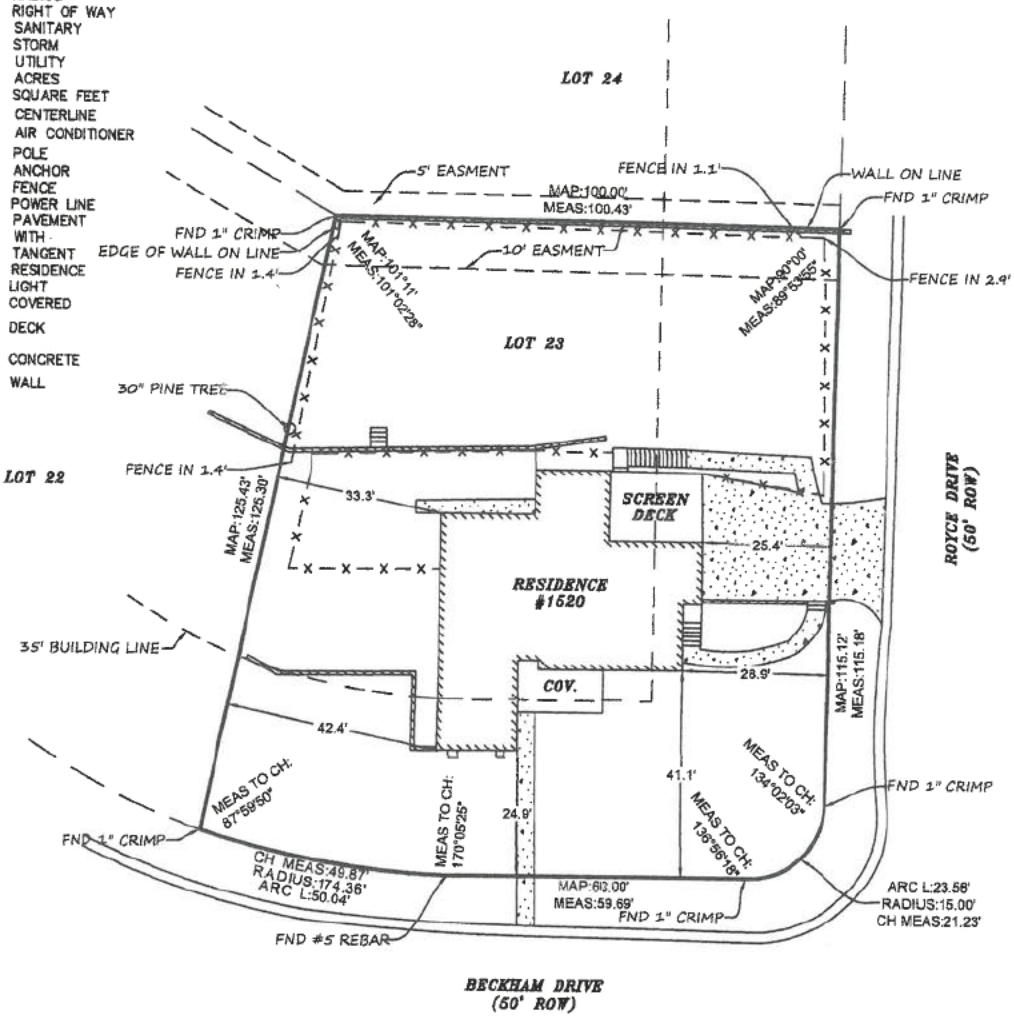


SCALE: 1"=30'

ALABAMA LICENSED PROFESSIONAL No. 24973 LAND SURVEYOR RAY WEYGAND

STATE OF ALABAMA)
JEFFERSON COUNTY)

"Property Boundary Survey"

I, Ray Weygand, a Registered Land Surveyor, hereby certify to the purchaser of this property at this time, that I have surveyed Lot 23, VALLEY HOMES 1ST ADD, as recorded in Map Volume 49, Page 37, in the Office of the Judge of Probate, Jefferson County, Alabama. I hereby state that all parts of this survey and drawing have been completed in accordance with the current requirements of the Standards of Practice for Surveying in the State of Alabama to the best of my knowledge, information and belief; according to my survey of AUGUST 15, 2022. Survey invalid if not sealed in red.

Order No.: 20221293
Purchaser:
Address: 1520 BECKHAM DRIVE


Ray Weygand, Reg. L.S. #24973
169 Oxmoor Road Homewood, AL 35209
Phone: (205) 942-0086 Fax: (205) 942-0087



WEYGAND SURVEYORS

Note: (a) No title search of the public records has been performed by this firm and land shown hereon was not abstracted for easements and/or rights-of-way, recorded or unrecorded. The parcel shown hereon is subject to setbacks, easements, zoning, and restrictions that may be found in the public records of said county and/or city. (b) All bearings and/or angles, are deed/record map and actual unless otherwise noted. (c) Underground portions of foundations, footings, and/or other underground structures, utilities, cemeteries or burial sites were not located unless otherwise noted. (d) The shown north arrow is based on deed/record map. (e) This survey is not transferable. (f) Easements not shown on recorded map are not shown above.

LEGEND

| | |
|---|---|
| ASP | ASPHALT |
| BLDG | BUILDING |
| CALC | CALCULATED |
| MEAS | MEASURED |
| CH | CHORD |
| LNG | LONG CHORD |
| d | DEFLECTION |
| Δ | DELTA |
| ESMT | EASEMENT |
| HW | HEADWALL |
| MIN | MINIMUM |
| MH | MANHOLE |
| OH | OVERHANG |
| POR | PORCH |
| R | RADIUS |
| R.O.W. | RIGHT OF WAY |
| SAN | SANITARY |
| STM | STORM |
| UTIL | UTILITY |
| AC | ACRES |
| S.F. | SQUARE FEET |
| ℄ | CENTERLINE |
| A/C | AIR CONDITIONER |
| | POLE |
| | ANCHOR |
| —X— | FENCE |
| | POWER LINE |
| PVMT | PAVEMENT |
| W/ | WITH |
| TAN | TANGENT |
| RES | RESIDENCE |
| oLGT | LIGHT |
| COV | COVERED |
| | DECK |
| | CONCRETE |
| | WALL |

REQUESTED

20'X20' DECK

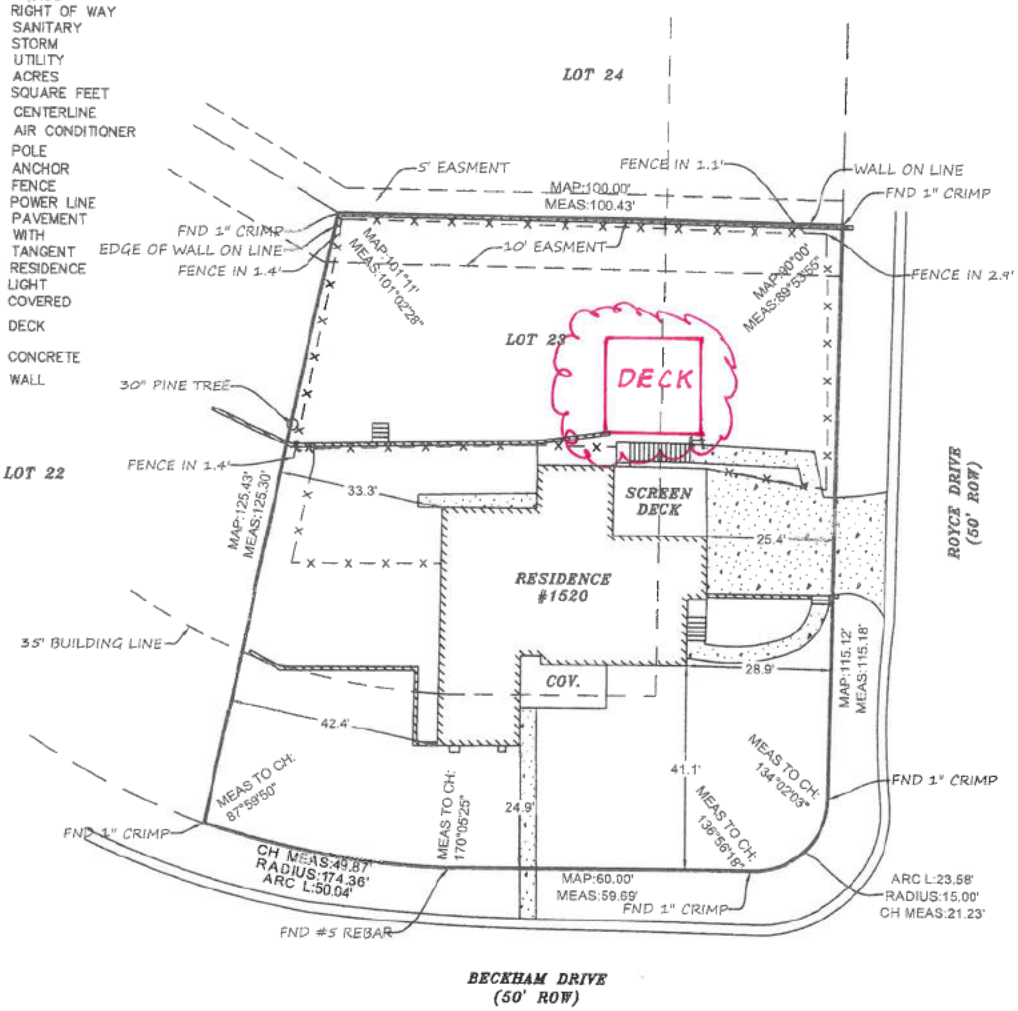


SCALE: 1"=30'

ALABAMA LICENSED PROFESSIONAL No. 24973 LAND SURVEYOR RAY WEYGAND

STATE OF ALABAMA)
JEFFERSON COUNTY)

"Property Boundary Survey"

I, Ray Weygand, a Registered Land Surveyor, hereby certify to the purchaser of this property at this time, that I have surveyed Lot 23, VALLEY HOMES 1ST ADD, as recorded in Map Volume 49, Page 37, in the Office of the Judge of Probate, Jefferson County, Alabama. I hereby state that all parts of this survey and drawing have been completed in accordance with the current requirements of the Standards of Practice for Surveying in the State of Alabama to the best of my knowledge, information and belief, according to my survey of AUGUST 15, 2022. Survey invalid if not sealed in red.

Order No.: 20221293
Purchaser: _____
Address: 1520 BECKHAM DRIVE


Ray Weygand, Reg. L.S. #24973
169 Oxmoor Road Homewood, AL 35209
Phone: (205) 942-0086 Fax: (205) 942-0087



WEYGAND SURVEYORS

Note: (a) No title search of the public records has been performed by this firm and land shown hereon was not abstracted for easements and/or rights-of-way, recorded or unrecorded. The parcel shown hereon is subject to setbacks, easements, zoning, and restrictions that may be found in the public records of said county and/or city. (b) All bearings and/or angles, are deed/record map and actual unless otherwise noted. (c) Underground portions of foundations, footings, and/or other underground structures, utilities, cemeteries or burial sites were not located unless otherwise noted. (d) The shown north arrow is based on deed/record map. (e) This survey is not transferable. (f) Easements not shown on recorded map are not shown above.

Overhead View: SUBFRAME

5/4" x 6" decking to be added

1520 Beckham Dr.

(Joist hangers will be added to the end of every joist)

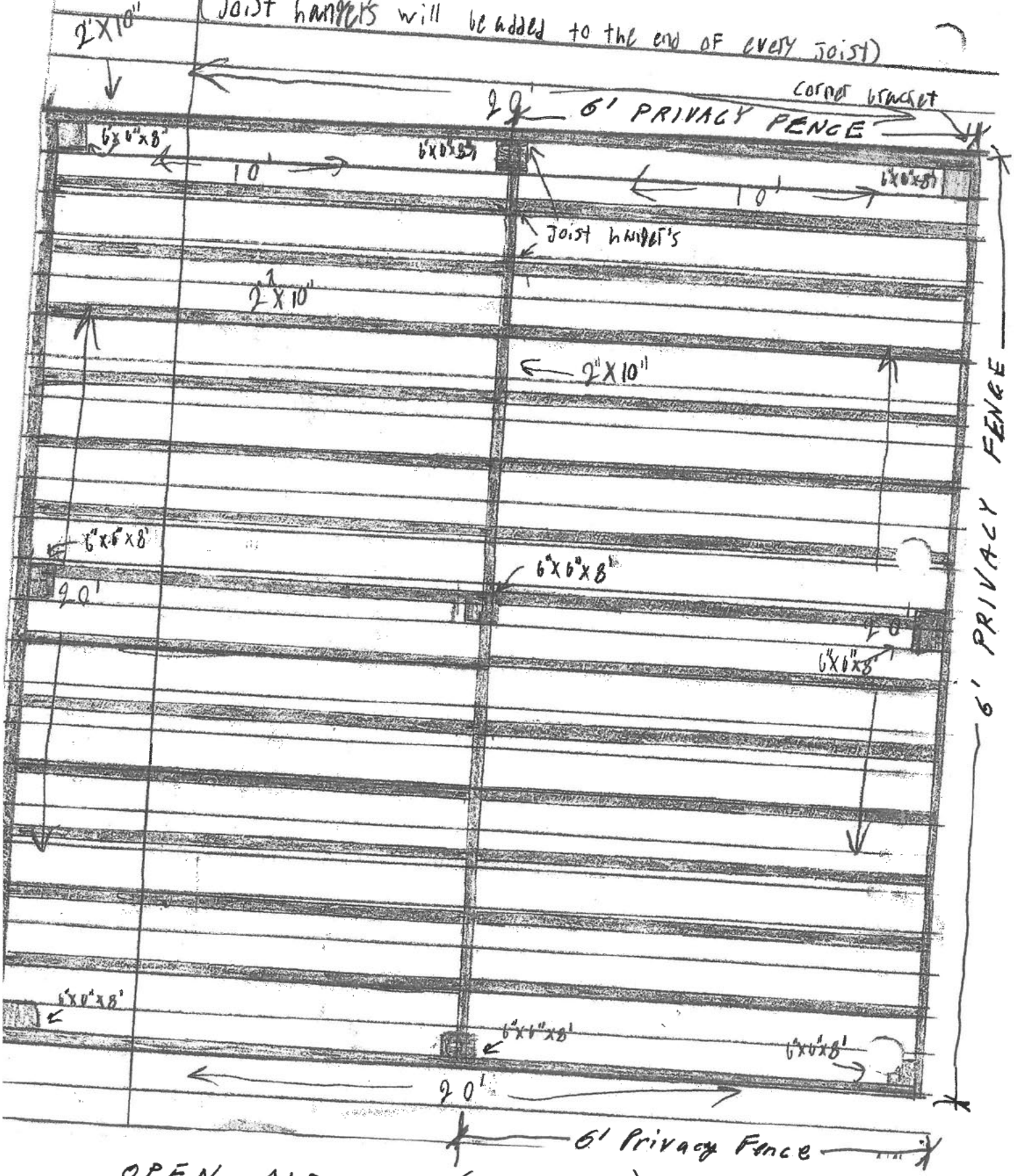


OPEN AIR DECK (NO ROOF)

N
North

# Side View: Footing

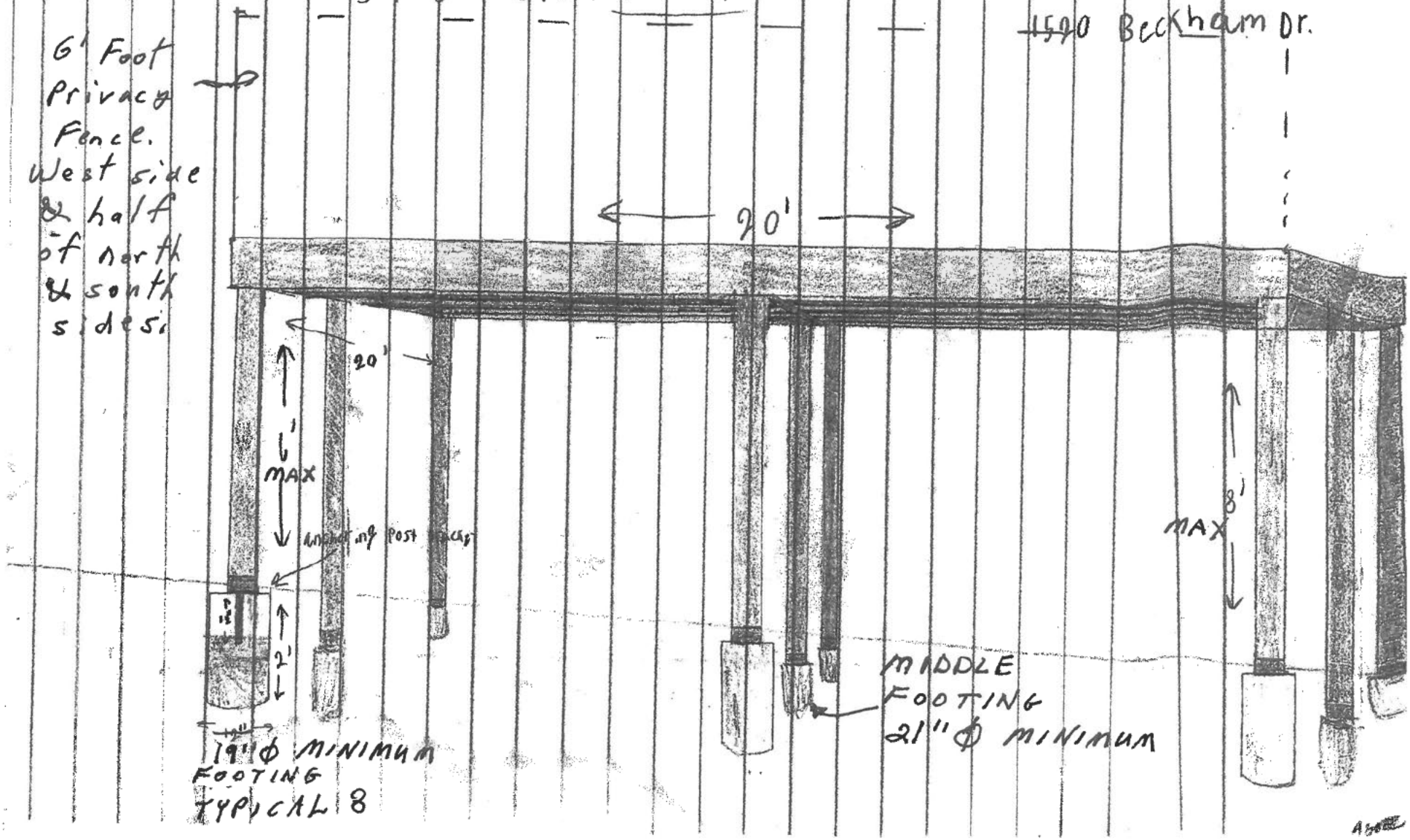

Scale → 2" = 1'

5/4 Board Decking

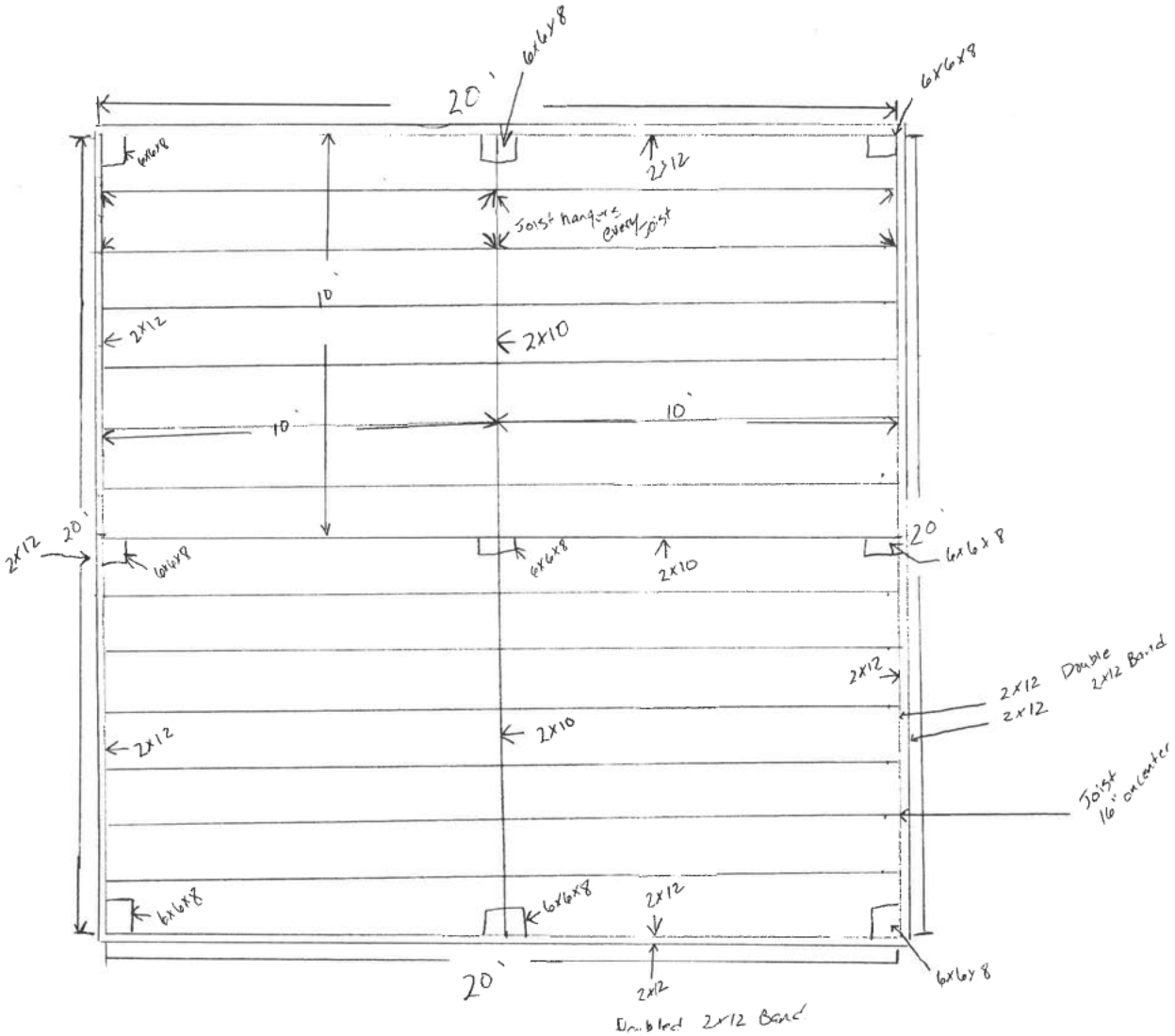

Scale → 2" = 1'

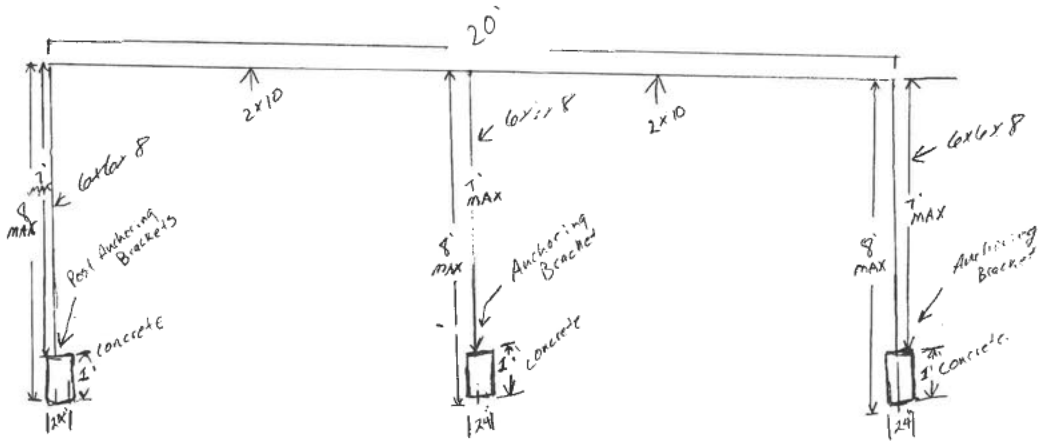
20'
2x10
6x6x8
2x10
6x6x8
6x6x8
7' MAX
8' MAX
Post Anchoring Brackets
Anchoring Bracket
Anchoring Brackets
concrete
concrete
concrete
1'
1'
1'
24"
24"
24"

Scale 1" = 2'

## Front View

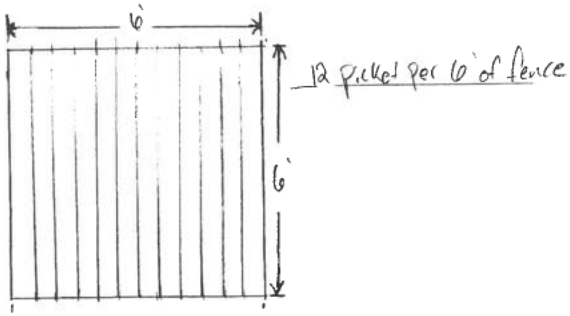


## Rear View

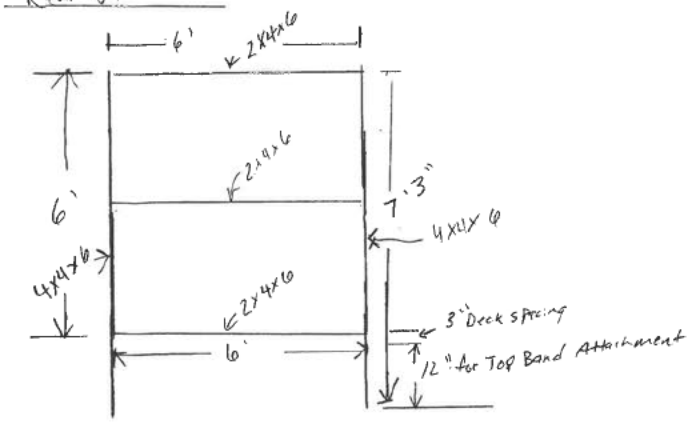


20' 20'

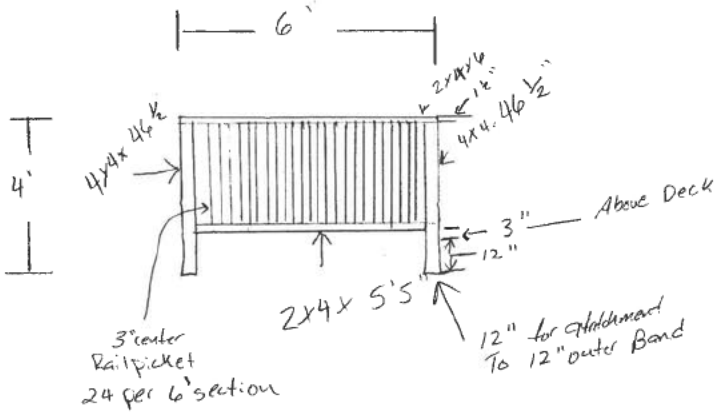


7 sections needed
for 40 foot

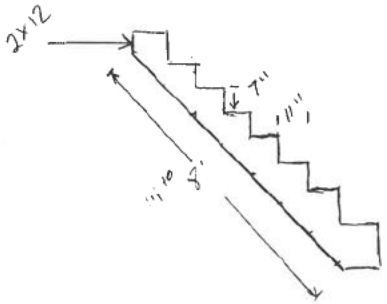


steps min of 3' wide

place for step length as needed per ground level

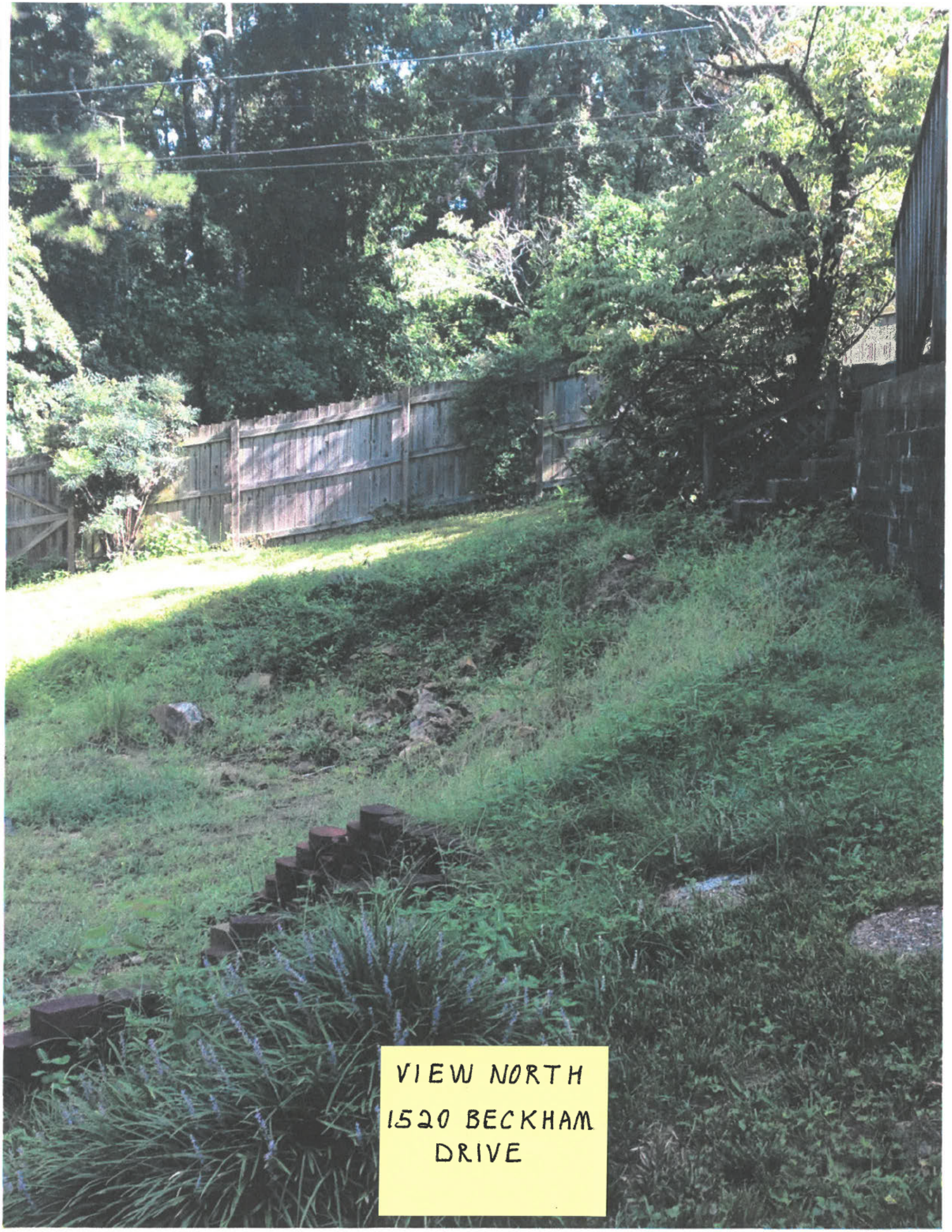
VIEW NORTH
1520 BECKHAM
DRIVE

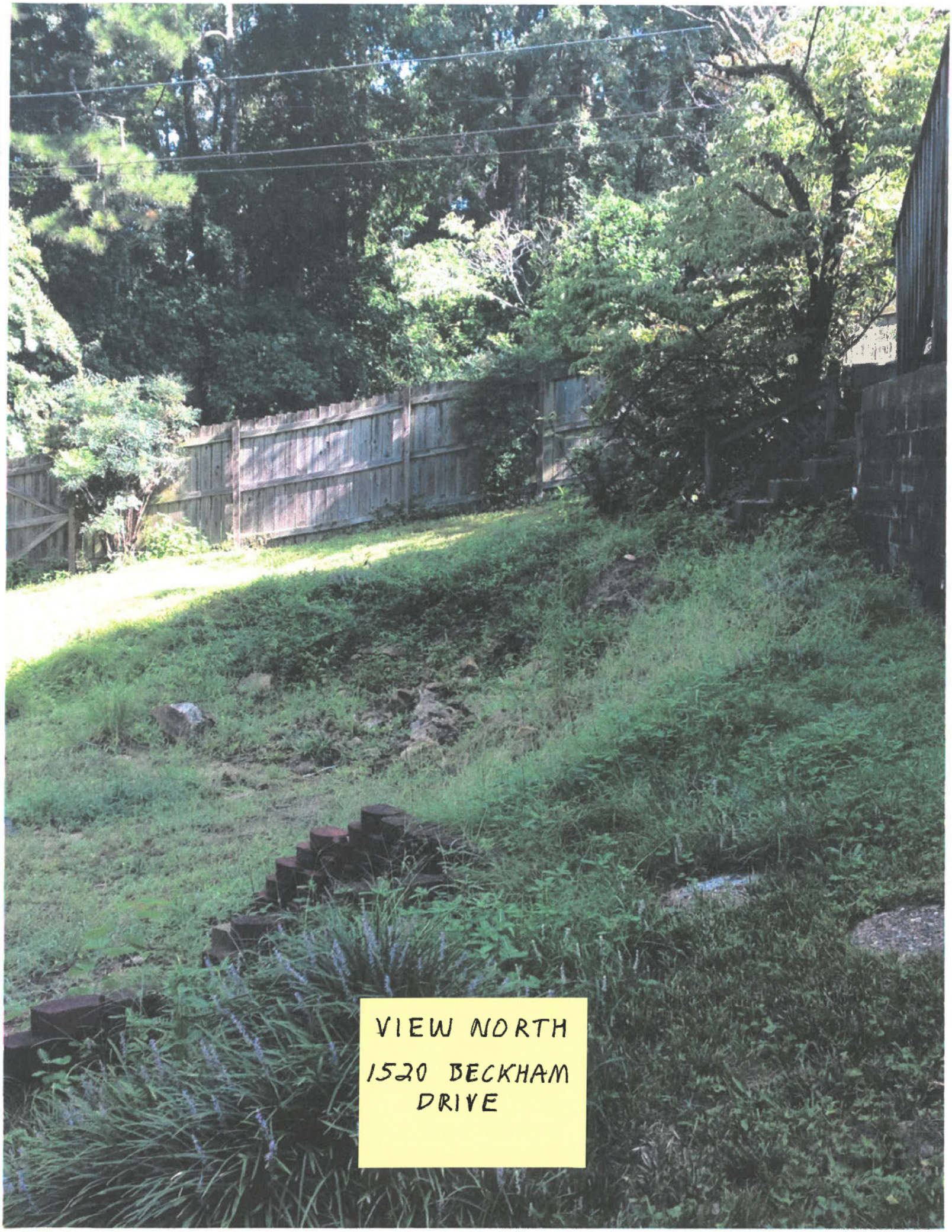
VIEW NORTH
1520 BECKHAM
DRIVE

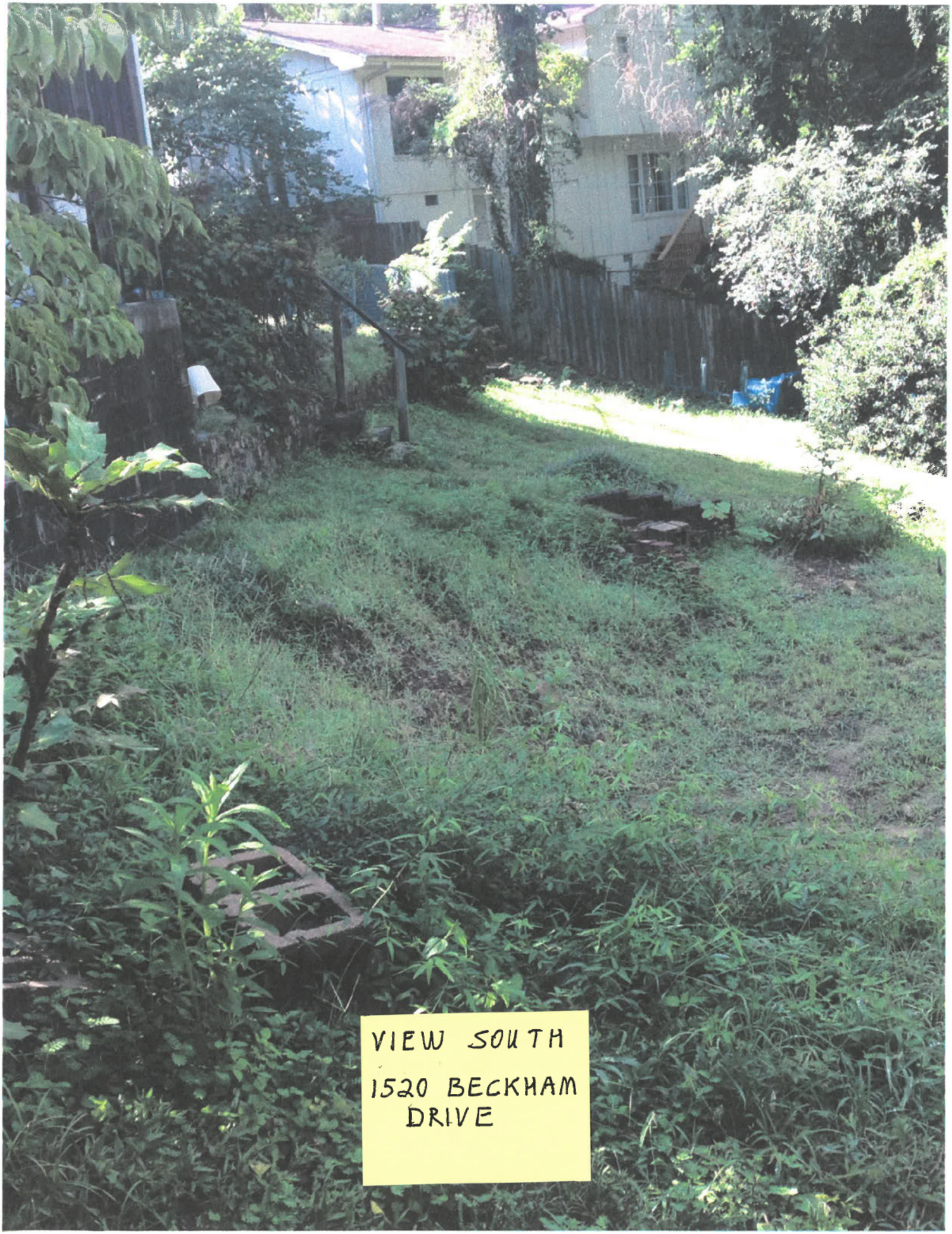
VIEW SOUTH
1520 BECKHAM
DRIVE

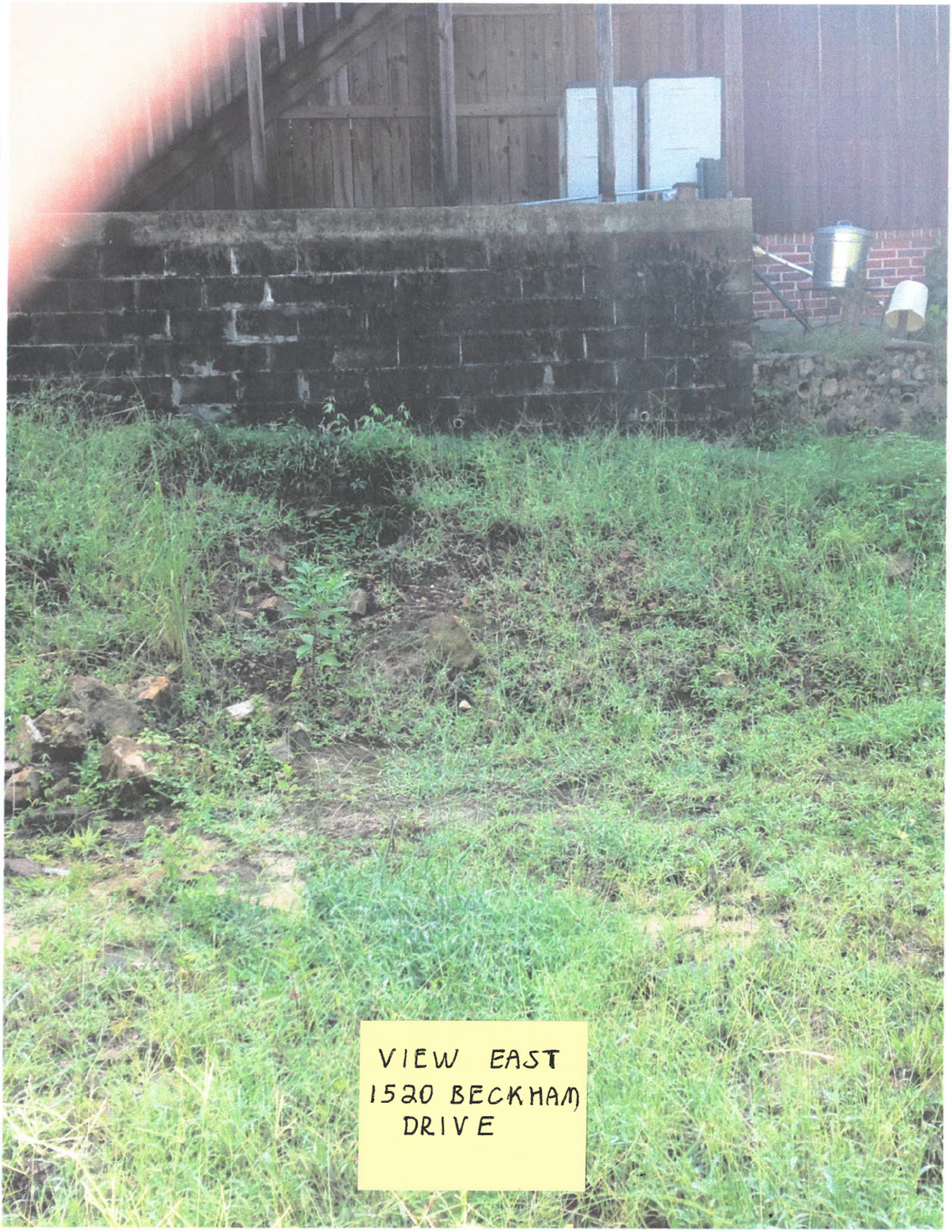
VIEW EAST
1520 BECKHAM
DRIVE

CITY OF HOMEWOOD
ENGINEERING & ZONING DEPARTMENT

2850 - 19th Street South - 4th Floor
Homewood, Alabama 35209
Phone 205-332-6800 | Fax 205-332-6955

Patrick McClusky, Mayor Cale Smith, PE, Director

September 30, 2022

Daniel & Tammy Compagno
1520 Beckham Drive
Homewood, AL 35209

**Dear Owner/Applicant and/or Adjacent Property Owners:**

The owner has petitioned the Homewood Board of Zoning Adjustments for a modification to the Homewood Zoning Ordinance for the property located at:

> ***SV-22-10-01, 1520 Beckham Drive, Parcel ID No.: 29 00 12 4 009 017.000***
> ***Applicants / Property Owners: Daniel & Tammy Compagno***
> *A request for a variance to Article V, District Development Criteria, Sec. D. Accessory structures, (3), to allow the placement of an accessory structure (deck) in the secondary front yard of a corner lot.*

The Board of Zoning and Adjustments will consider this petition during a meeting to be held at 6:00 p.m. on Thursday, October 6, 2022, in the Council Chambers (2nd Floor) at Homewood City Hall, 2850 19th Street South. If you prefer not to attend the in-person meeting at City Hall, you may join on-line utilizing the attached Zoom instructions **(SEE INSTRUCTIONS ON THE REVERSE SIDE OF THIS NOTICE)**

This letter will serve as notice to the parties in interest and to all adjacent property owners. Any protest to the above referenced petition will be heard at this time. The applicant and/or owner must participate in the meeting to present their case.

Sincerely,

Sherri Williams
Zoning Supervisor

You may contact our office for further information or questions at (205) 332-6800 OR visit between 7:30 a.m. and 4:30 p.m. Mon-Fri to review any files or drawings pertaining to this application

**Instructions:** Although the proceedings of the meeting may be viewed on-line, please note that anyone wishing to participate in a discussion of the scheduled cases must attend the meeting in Homewood City Hall in person. If you choose to view the meeting via Zoom, please follow the instructions below:

1st Option: Join on-line at www.zoom.us/join
Meeting #: 883 5766 5513
Passcode: 514257

2nd Option: Join through the app if you already have the Zoom app downloaded:
Meeting #: 883 5766 5513
Passcode: 514257

3rd Option: Dial in by phone: 312-626-6799

**Comments in support or opposition to cases on the agenda, may be submitted to the Secretary to the Board of Zoning Adjustments at fred.goodwin@homewoodal.org. Comments should be submitted no later than 24-hours prior to the meeting and will be provided to the board's members for their consideration. Please reference the case number or address in your comments.**

**A copy of the file on this case will be available for review on the City of Homewood's website (cityofhomewood.com) under "Upcoming Meetings/BZA" approximately one week before the scheduled public hearing.**

**The scheduled public hearing will be preceded by a brief work session for Board Members beginning at 5:30 p.m. in the City Council's Committee Workroom located on the 2nd floor behind the Council Chambers.**

CAPture Citizen Access

JEFFERSON COUNTY, ALABAMA. CITIZEN ACCESS PORTAL

WELCOME PROPERTY TAX BOE PERSONAL PROPERTY REDEMPTION

- Search
- Pay Tax
- Assessment
- Forms

1520 Beckham Dr Search

ENTER PART OF THE ADDRESS.

○ Name ○ Parcel # ◉ Address

Tax Year: 2022

1 Record Found. TAX YEAR: 2022

29 00 12 4 009 017.000

| | | | | |
|---|---|---|---|---|
| 1 | OWNER NAME: | COMPAGNO DANIEL RALPH & | RECEIPT NO: | **5109076** |
| | ADDRESS: | 1520 BECKHAM DR<br>BIRMINGHAM AL 35209-1720 | LAND VALUE:<br>IMP VALUE: | **$160,000**<br>**$198,100** |
| | CLASS: | 3 - RESIDENTIAL | TOTAL VALUE: | **$358,100** |
| | EXEMPTION: | 2-2 | APPR. VALUE: | **$358,100** |
| | MUNICIPALITY: | 12 HOMEWOOD | TOTAL TAX: | $2,615.49 |
| | CLASS USE: | | PAID: | $0.00 |
| | | | TOTAL DUE: | **$2,620.49** |

QUICK LINKS

- BOE
- Property Tax
- Assessment
- Collection
- Millage Rate
- Contact Us
- County Site
- ** News **

**Disclaimer:** Information and data provided by any section of this website are being provided "as-is" without warranty of any kind. The information and data may be subject to errors and omissions.

Jefferson County
716 Richard Arrington Jr Blvd N
Birmingham, AL 35203
(205) 325-5500

COMPLETE AND SUBMIT
PRIOR TO THE DEADLINE DATE



[X] **VARIANCE** [ ] **APPEAL**

**ADDRESS OF PROPERTY:** 201 Morris Blvd.

**BZA CASE # (assigned by city staff):** SV # 22-10-02

**APPLICANT INFORMATION**

Name of Applicant (s): Sarah E. Merkle

Address of Applicant(s): 201 Morris Blvd.

Homewood, AL 35209
City State Zip

Telephone Number(s) of Applicant(s): Redacted by City Staff

Email : Redacted by City Staff

Property Interest of Applicant(s): Owner
(i.e., owner, contract purchaser, agent, architect, contractor, developer, etc)

**OWNER INFORMATION – *If different from Applicant***

Name of Owner(s): _____

Address of Owner(s) (**ONLY** if address is different from property address) otherwise put <u>same</u>:

_____
City State Zip

Email : _____

Telephone Number(s) of Owner(s): _____

**DESCRIPTION, USE AND ZONING OF PROPERTY** (Parcel ID & present zoning can be filled out at time of application submittal)

PARCEL IDENTIFICATION NUMBER: 29 00 14 4 008 001.000

PRESENT USE: ____ vacant ___X___ residence

____ commercial (describe): _____

____ other (describe): _____

PRESENT ZONING (per current City map): NPD

COMPLETE AND SUBMIT
PRIOR TO THE DEADLINE DATE



**PLEASE STATE HARDSHIP** – for guidance, see "*What is a Variance*" on page 1 of instructions page:

The one story house is an existing non-conforming structure. I would like to add a rear addition to the home to create a master suite and breakfast area. We are requesting a right and left setback variance to bring the existing structure into compliance.

**PURPOSE OF VARIANCE**

A variance is requested on the property described below in conformity with the powers vested in the Board to permit:

- X the construction of an addition to a residence,
- ___ the construction of residence,
- ___ the construction of an addition to a commercial structure,
- ___ the construction of a commercial structure,
- ___ other (describe):_____

COMPLETE AND SUBMIT
PRIOR TO THE DEADLINE DATE



## INDICATE THE FOLLOWING

***The following information can be completed when applying but applicant must bring a survey to verify:***

| | *Required by Zoning Regulations | Setback dimensions As they **NOW** exist | Setback dimensions **AFTER** construction | FINAL Setback Variance Requested |
|---|---|---|---|---|
| Front Bldg. Setback Street: | 33.6' | 39.98' | 35.46' | 0' |
| Front Bldg. Setback Street: (secondary - corner lot) | 10' | 7.80' | 7.80' | 2.20' |
| Right Bldg. Setback | 10' | 6.80' | 6.80' | 3.20' |
| Left Bldg. Setback | | | | |
| Rear Bldg. Setback | 20' | 76.86' | 50.61' | |
| Accessory Structure Setback: side/rear | 5'/5' | 12'/53.3' | 12'/53.3' | |
| | As Required | Existing NOW | Proposed | Variance Required |
| Lot Area | | | | |
| Lot Width | | | | |
| Parking | | | | |
| Height of Structure | | | | |
| Lot Coverage | | | | |

Redacted by City Staff

Redacted by City Staff

Existing Rear Lot Coverage is also 4% over required

*For required setback information, please refer to the Zoning Ordinance Book, which is available on the City of Homewood website. If you need to find out how your property is zoned, please contact the zoning department by calling 332-6828 or 332-6854 or by clicking on the following link to email: Zoning Information.

*The undersigned hereby grants permission for a sign, advertising the BZA hearing date, time and place to be posted on my property. I (we) attach $100.00 application fee and promise to pay any additional costs billed separately for extra items related to this variance request.*

*I (we) certify that all of the above statements and the statements contained in any paper of plans submitted herewith are true to the best of my (our) knowledge and belief.*

Redacted by City Staff
Signature of Applicant

08.29.22
Date

Redacted by City Staff
Signature of Owner

08.29.22
Date

Signature of Owner

Date

# City of Homewood BZA Case Map

**201 Morris Blvd.**

**SV 22-10-02**

**Aerial Photo**

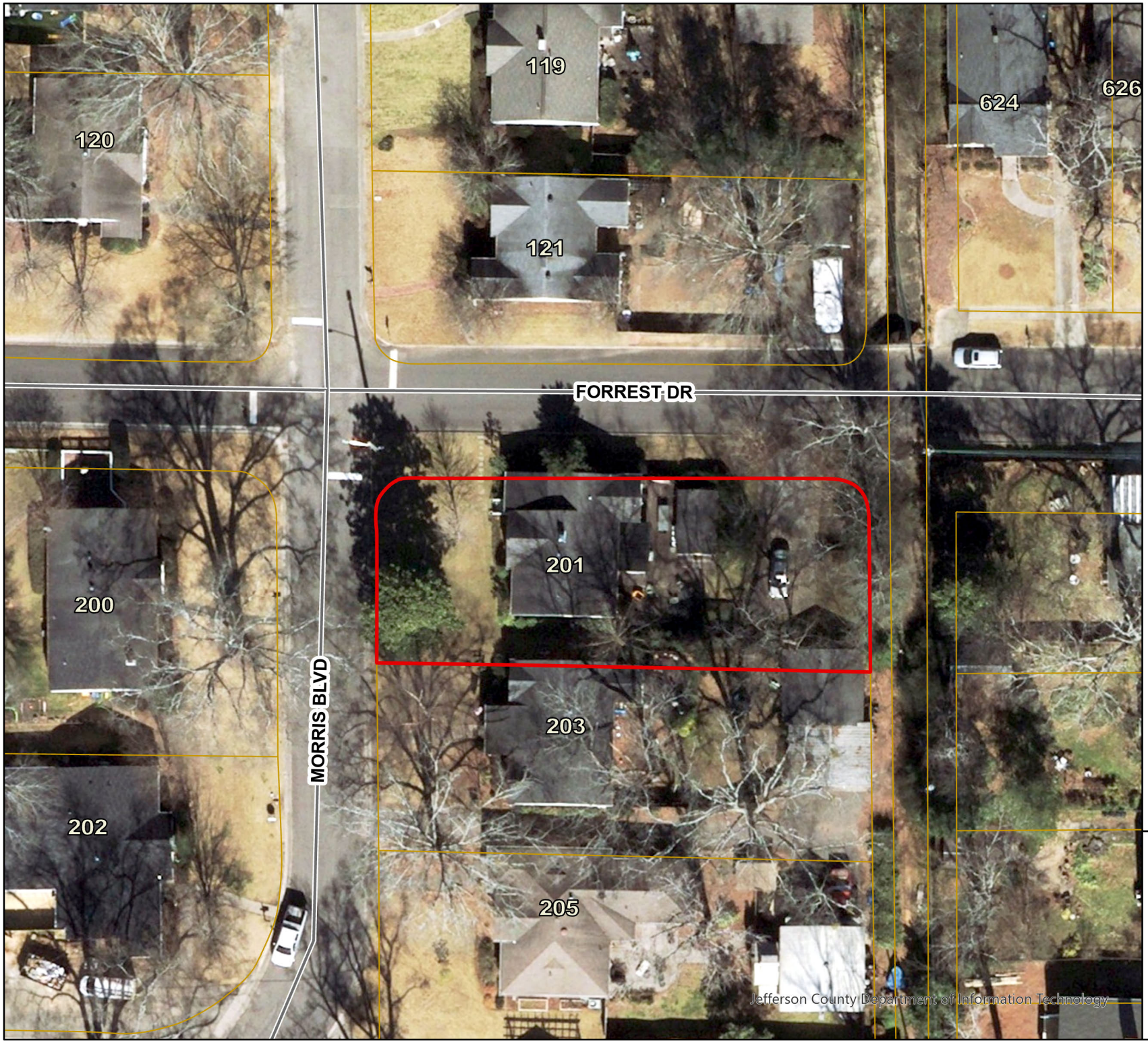


Subject Property

Parcels

N

0 12.5 25 50 Feet

THE INFORMATION ON THIS DRAWING WAS COMPILED FROM SERVERAL SOURCES AND SHOULD ONLY BE USED FOR GEREAL INFORMATION AND ORENTATION. THIS DRAWING IS THE PROPERTY OF THE CITY OF HOMEWOOD AND ITS USE BY ANYONE FOR ANY PURPOSE OTHER THAN THAT SPECIFICALLY AUTHORIZED BY THE CITY OF HOMEWOOD IS PROHIBITED.

ZONING IS SUBJECT TO CHANGE. PLEASE CALL ZONING OFFICE TO CONFIRM ZONING. 332-6828

# BOUNDARY SURVEY LOT 4

WEST EDGEWOOD PLACE
MAP BOOK 28, PAGE 31
JEFFERSON COUNTY, ALABAMA

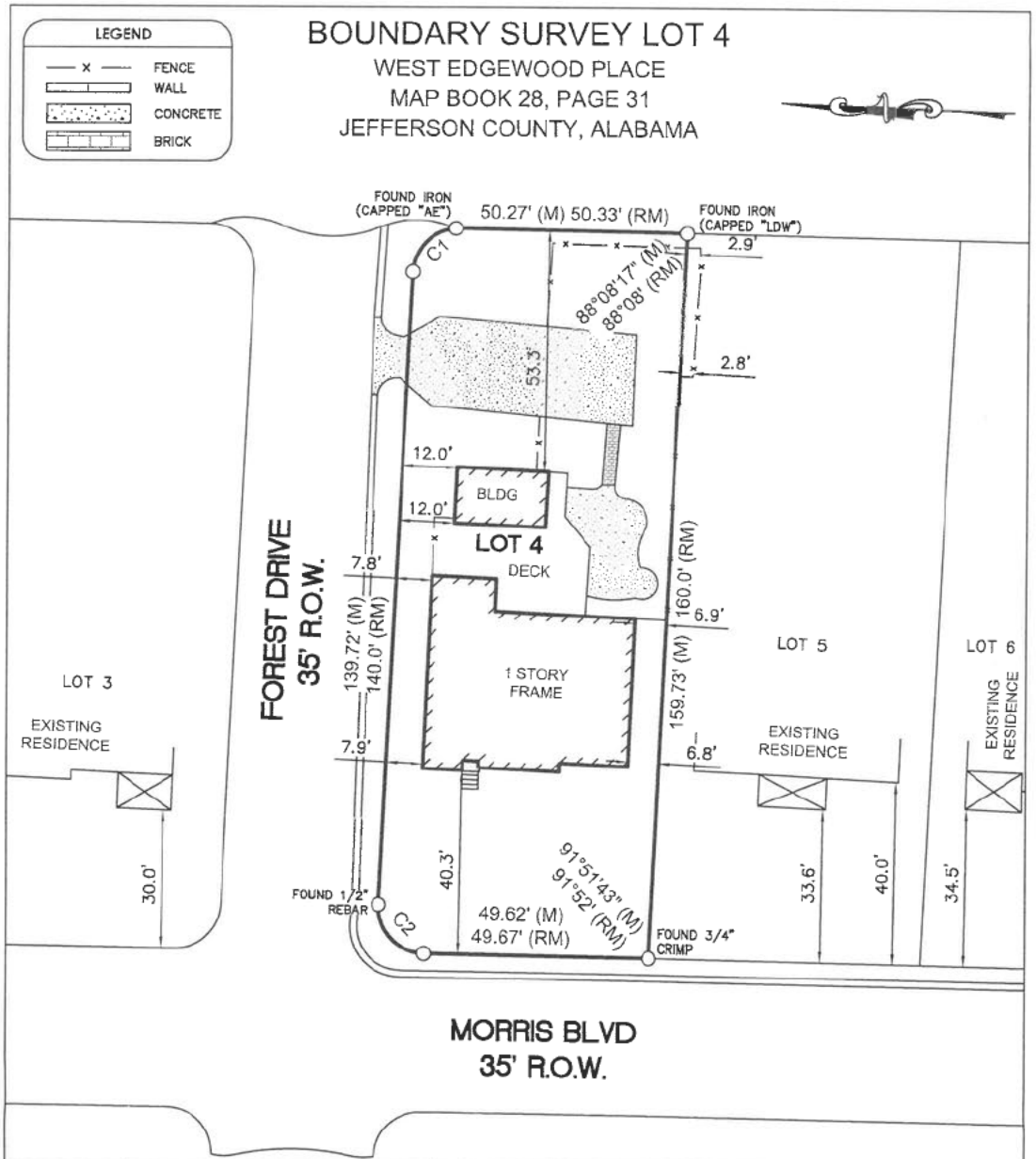


| CURVE | ARC LENGTH | RADIUS | DELTA ANGLE | CHORD LENGTH |
|---|---|---|---|---|
| C1 | 15.38' | 10.00' | 88°08'17" | 13.91' |
| C2 | 16.03' | 10.00' | 91°51'43" | 14.37' |

SCALE: 1" = 30'

0 30 60

DESCRIPTION

Lot 4 of WEST EDGEWOOD PLACE as recorded in Map Book 28 Page 31 in the Office of the Judge of Probate in JEFFERSON County, Alabama.

I hereby certify that all parts of this survey and drawing have been completed in accordance with the current requirements of the Standards of Practice for Surveying in the State of Alabama to the best of my knowledge, information, and belief.

ALABAMA REGISTERED No.26013 PROFESSIONAL LAND SURVEYOR RODNEY KEITH CUNNINGHAM

Surveyor's Signature: _____
Alabama License Number 26013, Date: February 15, 2022

NOTE:
1. North arrow based on PLAT.
2. Survey not valid without original signature.

| | |
|---|---|
| Address: | 201 MORRIS BLVD |
| Date of Fieldwork: | 2022-02-15 |
| Date of Survey: | 2022-02-11 |
| Job Number: | TWIN0094 |
| Drawn By: | MBA |
| Survey For: | TWIN COMPANIES |
| Type of Survey: | BOUNDARY SURVEY |


120 BISHOP CIRCLE, SUITE 300
PELHAM, AL 35124

EDG
ENGINEERING DESIGN GROUP, LLC
CIVIL ENGINEERING · LAND SURVEYING


U:\PROJECTS\TWIN0094 - 201 MORRIS BLVD\TWIN0094.dwg

**MERKLE**

PROJECT ADDRESS

201 Morris Blvd.
Homewood, AL 35209

Twin Companies

2907 Central Ave.
Suite 105
Homewood, AL 35209

TWIN
INSPIRE. DESIGN. BUILD.

CHANGE LOG :

| Date: | Description: |
|---|---|
| | |
| | |
| | |
| | |
| | |

BLAH CONTRACT | Cynee Parker
PHONE: | PHONE:

SHEET INDEX



SHEET NUMBER

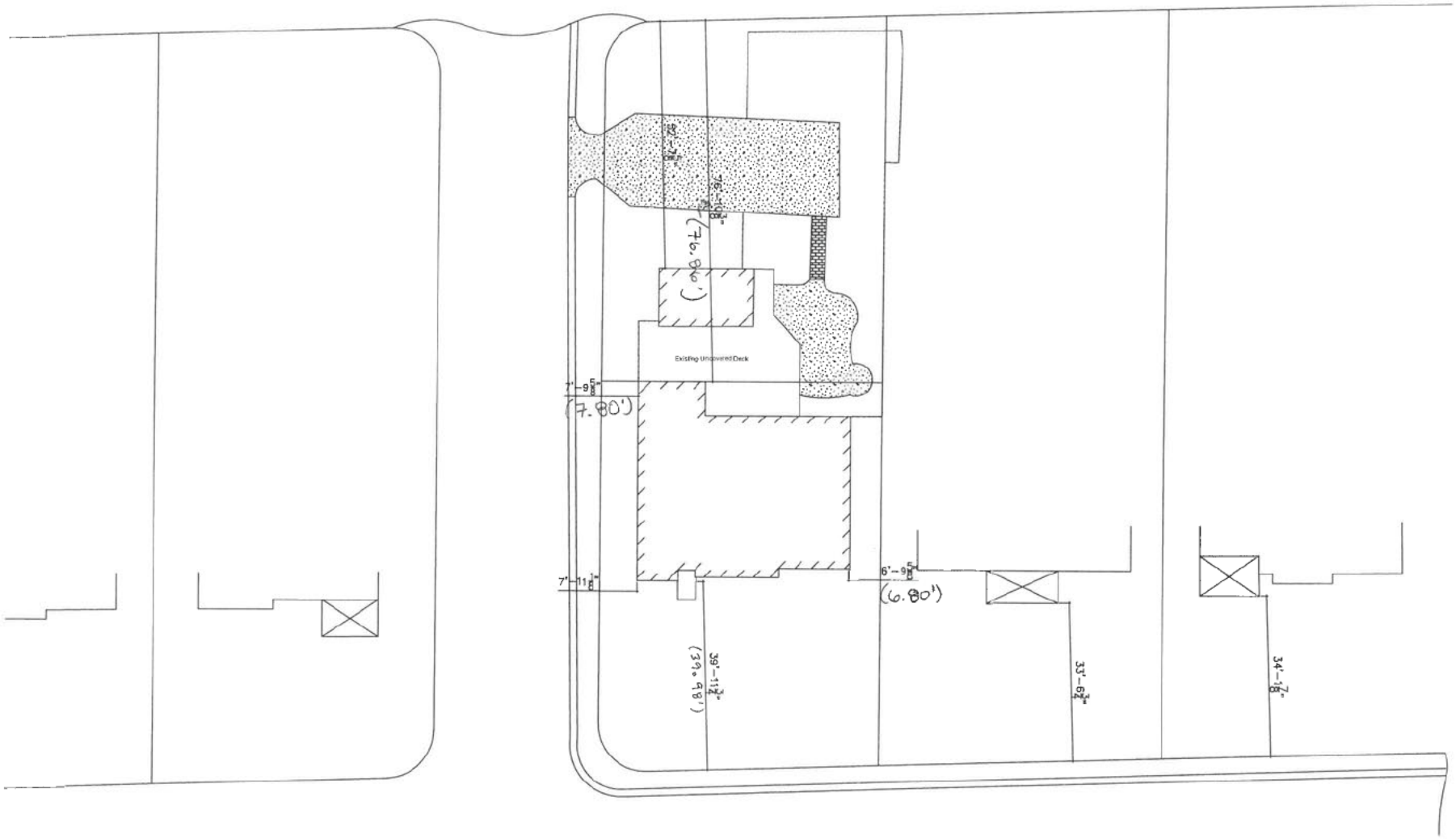


# Site Plan - Existing

SCALE : 3/32" = 1'-0"

**MERKLE**

PROJECT ADDRESS

201 Morris Blvd.
Homewood, AL 35209

Twin Companies

2907 Central Ave.
Suite 105
Homewood, AL 35209

TWIN

INSPIRE. DESIGN. BUILD.

CHANGE LOG :

| Date: | Description: |
|---|---|
| x | x |
| x | x |
| x | x |
| x | x |
| x | x |

PLAN CONTACT : Opal Tedar
PHONE : 334-821-2020

SHEET INDEX



SHEET NUMBER

S1.0

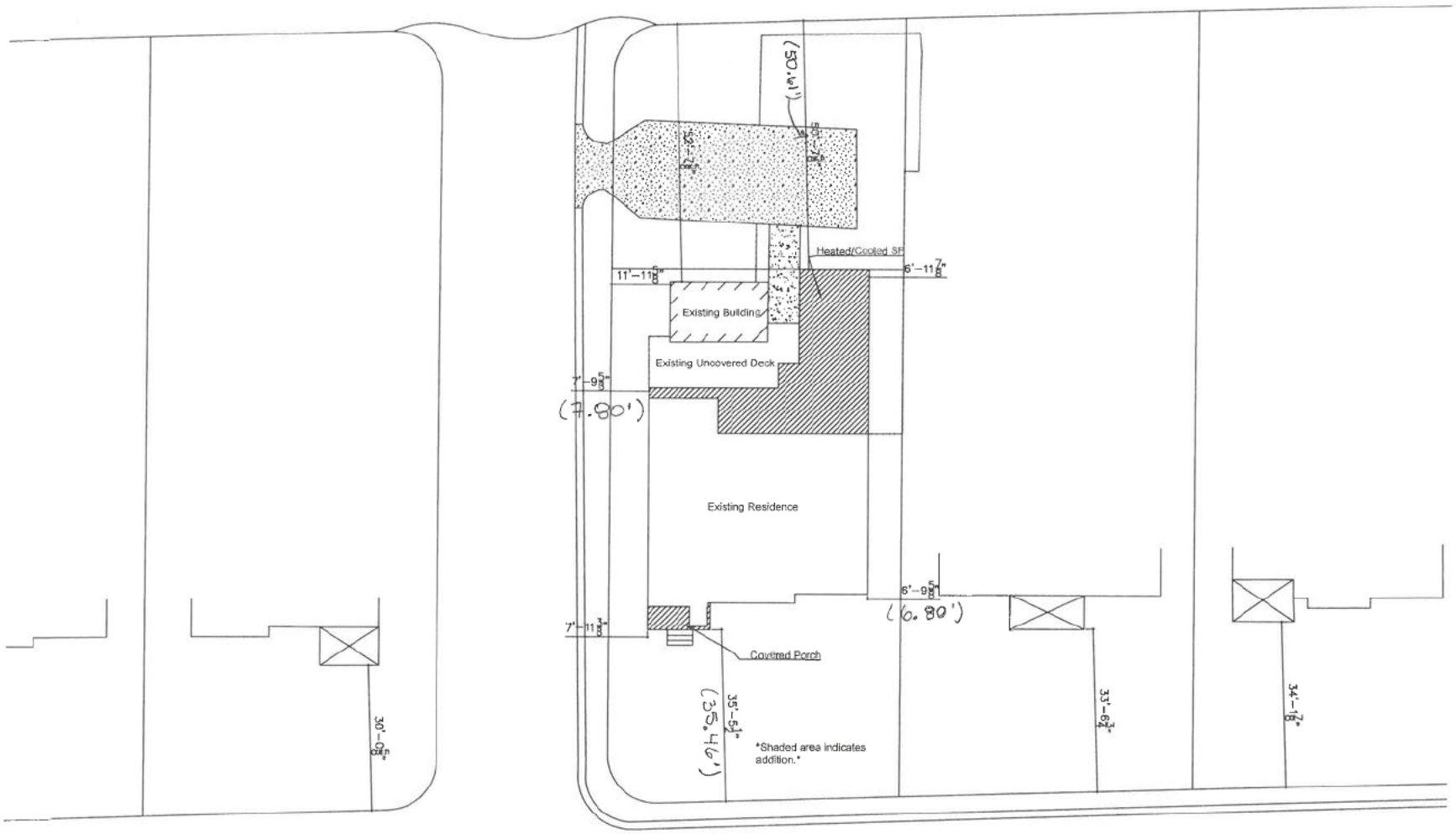


# Site Plan - Proposed

SCALE : 3/32" = 1'-0"

**MERKLE**

PROJECT ADDRESS

201 Morris Blvd.
Homewood, AL 35209

Twin Companies

2907 Central Ave.
Suite 105
Homewood, AL 35209

TWIN
INSPIRE. DESIGN. BUILD.

CHANGE LOG :

| Date: | Description: |
|---|---|
| x | x |
| x | x |
| x | x |
| x | x |
| x | x |

PLAN CONTACT : Gene Fisher
PHONE : 205.802.8292

SHEET INDEX



SHEET NUMBER

S1.1


EXISTING
1585sf (including closed in front porch)

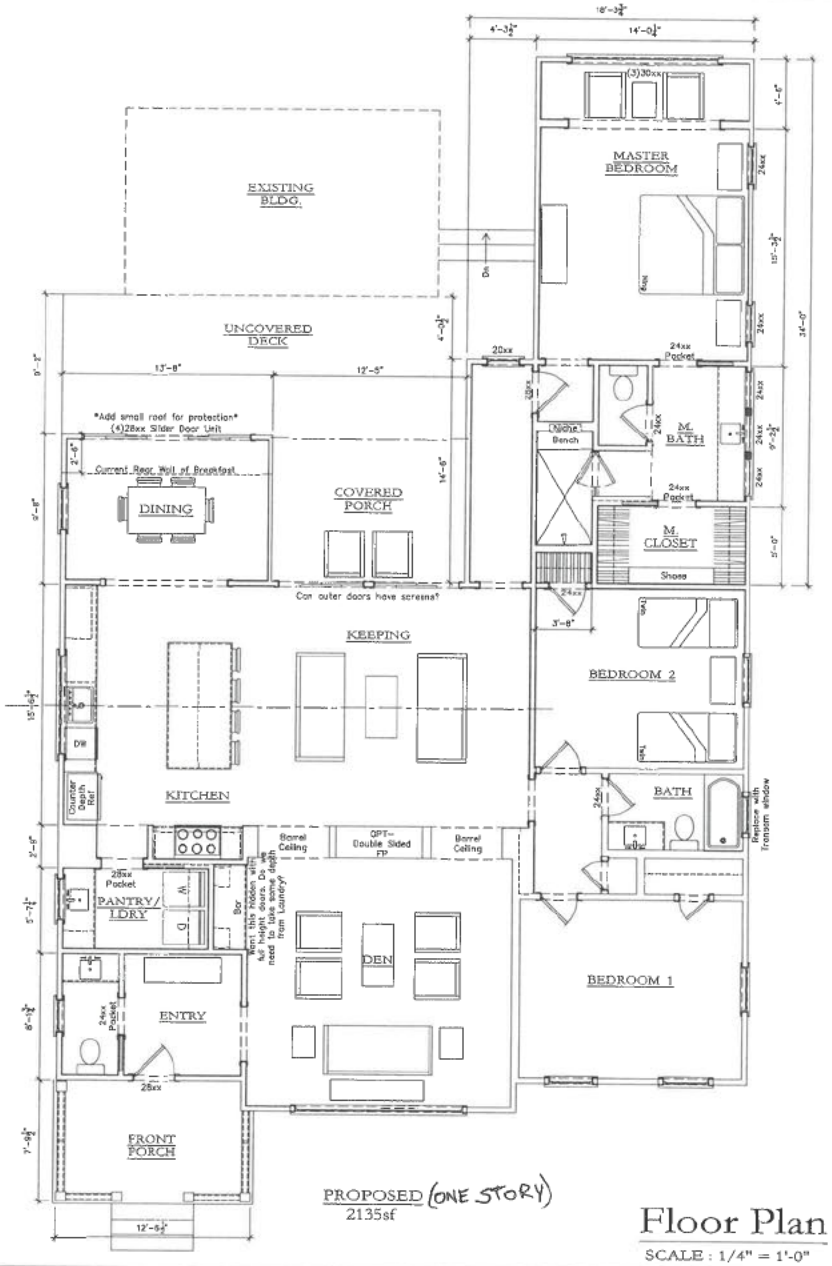


PROPOSED (ONE STORY)
2135sf

# Floor Plan

SCALE : 1/4" = 1'-0"

MERKLE

PROJECT ADDRESS

201 Morris Blvd.
Homewood, AL 35209

Twin Companies

2907 Central Ave.
Suite 105
Homewood, AL 35209

TWIN
INSPIRE. DESIGN. BUILD.

CHANGE LOG :

| Date: | Description: |
|---|---|
| x | x |
| x | x |
| x | x |
| x | x |
| x | x |

TEAM CONTACT: Cynthia Clark
PHONE: 205.802.2555

SHEET INDEX



SHEET NUMBER

A2.0

CAPture Citizen Access

JEFFERSON COUNTY, ALABAMA. CITIZEN ACCESS PORTAL

WELCOME PROPERTY TAX BOE PERSONAL PROPERTY REDEMPTION

- Search
- Pay Tax
- Assessment
- Forms

201 morris blvd Search

ENTER PART OF THE ADDRESS.

○ Name ○ Parcel # ◉ Address

Tax Year: 2022

1 Record Found. TAX YEAR: 2022

29 00 14 4 008 001.000

| | | | | |
|---|---|---|---|---|
| 1 | OWNER NAME: | MERKLE SARAH E | RECEIPT NO: | **5106512** |
| | ADDRESS: | 201 MORRIS BLVD<br>BIRMINGHAM AL 35209-5147 | LAND VALUE:<br>IMP VALUE: | **$335,000**<br>**$181,000** |
| | CLASS: | 3 - RESIDENTIAL | TOTAL VALUE: | **$516,000** |
| | EXEMPTION: | 2-2 | APPR. VALUE: | **$516,000** |
| | MUNICIPALITY: | 12 HOMEWOOD | TOTAL TAX: | $3,799.00 |
| | CLASS USE: | | PAID: | $0.00 |
| | | | TOTAL DUE: | **$3,804.00** |

QUICK LINKS

- BOE
- Property Tax
- Assessment
- Collection
- Millage Rate
- Contact Us
- County Site
- ** News **

**Disclaimer:** Information and data provided by any section of this website are being provided "as-is" without warranty of any kind. The information and data may be subject to errors and omissions.

Jefferson County
716 Richard Arrington Jr Blvd N
Birmingham, AL 35203
(205) 325-5500

COMPLETE AND SUBMIT
PRIOR TO THE DEADLINE DATE

City of Homewood
Board of Zoning Adjustments
Request for Variance or Appeal

☑ **VARIANCE** ☐ **APPEAL**

**ADDRESS OF PROPERTY:** 227 OGLESBY AVE

**BZA CASE # (assigned by city staff):** SV# 22-10-03

**APPLICANT INFORMATION**

Name of Applicant (s): RANEY HARRELL

Address of Applicant(s): 227 OGLESBY AVE

HOMEWOOD AL 35209
City State Zip

Telephone Number(s) of Applicant(s): Redacted by City Staff

Email: Redacted by City Staff

Property Interest of Applicant(s): OWNER
(i.e., owner, contract purchaser, agent, architect, contractor, developer, etc.)

**OWNER INFORMATION** – ***If different from Applicant***

Name of Owner(s): Same

Address of Owner(s) (**ONLY** if address is different from property address) otherwise put same:

City State Zip

Email:

Telephone Number(s) of Owner(s):

**DESCRIPTION, USE AND ZONING OF PROPERTY** (Parcel ID & present zoning can be filled out at time of application submittal)

PARCEL IDENTIFICATION NUMBER: 29-00-13-3-016-001.000

PRESENT USE: _____ vacant _____ residence

_____ commercial (describe):

_____ other (describe):

PRESENT ZONING DISTRICT (City Zoning Map): NPD

COMPLETE AND SUBMIT
PRIOR TO THE DEADLINE DATE



**PLEASE STATE HARDSHIP** – for guidance, see "*What is a Variance*" on page 1 of instructions page:

EXISTING HOME IS NON CONFORMING. I AM SEEKING TO ADD A ROOF TO MY EXISTING BACK PORCH TO PROVIDE A MORE COMFORTABLE OUTDOOR EXPERIENCE AND INCREASE PORCH UTILIZATION.

**PURPOSE OF VARIANCE**

A variance is requested on the property described below in conformity with the powers vested in the Board to permit:

✓ the construction of an addition to a residence,
___ the construction of residence,
___ the construction of an addition to a commercial structure,
___ the construction of a commercial structure,
___ other (describe):_____

COMPLETE AND SUBMIT
PRIOR TO THE DEADLINE DATE

City of Homewood
Board of Zoning Adjustments
Request for Variance or Appeal

## INDICATE THE FOLLOWING

Applicant must provide a survey to verify:

| Setback information | *Required by zoning regulations | Setback dimensions currently existing | Setback dimensions after proposed construction | Setback Variance Requested |
|---|---|---|---|---|
| Front Setback Street Name | 65, 11 | | | |
| Front Setback – Corner lot Street Name | 10 | 9 | 6 | 4 |
| Right Bldg. Setback | | | | |
| Left Bldg. Setback | | | | |
| Rear Bldg. Setback | 20 | | | |
| Accessory Structure Setback: side/rear | 10 / 10 | 9 / 36 | 6 / 30 | 3 / 6 |
| **Property dimensions and structure information** | **As required** | **Currently existing** | **Proposed** | **Variance Requested** |
| Lot Area (sq. ft./acres) | | | | |
| Lot Width | | | | |
| Parking Spaces | | | | |
| Height of Structure | | | | |
| Lot Coverage sq. ft. of structures ÷ lot sq. ft. | | | | |

*Required setback information is available in the Zoning Ordinance which is available on the City of Homewood website. If you need to find out how your property is zoned, please contact the zoning department by calling 332-6828 or 332-6854 or by clicking on the following link to email: Zoning Information.

*The undersigned hereby grants permission for a sign, advertising the BZA hearing date, time and place to be posted on my property. I (we) attach $100.00 application fee and promise to pay any additional costs billed separately for extra items related to this variance request.*

*I (we) certify that all of the above statements and the statements contained in any paper of plans submitted herewith are true to the best of my (our) knowledge and belief.*

Signature of Applicant/Agent — Date

Redacted by City Staff

Signature of Owner — Date 8/30/22

Signature of Owner — Date

# City of Homewood BZA Case Map

**227 Oglesby Ave.**

**SV 22-10-03**

**Aerial Photo**


Subject Property

Parcels

N

0 12.5 25 50 Feet

THE INFORMATION ON THIS DRAWING WAS COMPILED FROM SERVERAL SOURCES AND SHOULD ONLY BE USED FOR GEREAL INFORMATION AND ORENTATION. THIS DRAWING IS THE PROPERTY OF THE CITY OF HOMEWOOD AND ITS USE BY ANYONE FOR ANY PURPOSE OTHER THAN THAT SPECIFICALLY AUTHORIZED BY THE CITY OF HOMEWOOD IS PROHIBITED.

ZONING IS SUBJECT TO CHANGE. PLEASE CALL ZONING OFFICE TO CONFIRM ZONING. 332-6828

LEGEND

| | |
|---|---|
| ASP | ASPHALT |
| BLDG | BUILDING |
| CALC | CALCULATED |
| MEAS | MEASURED |
| CH | CHORD |
| LNG | LONG CHORD |
| d | DEFLECTION |
| Δ | DELTA |
| ESMT | EASEMENT |
| HW | HEADWALL |
| MIN | MINIMUM |
| MH | MANHOLE |
| OH | OVERHANG |
| POR | PORCH |
| R | RADIUS |
| R.O.W. | RIGHT OF WAY |
| SAN | SANITARY |
| STM | STORM |
| UTIL | UTILITY |
| AC | ACRES |
| S.F. | SQUARE FEET |
| ℄ | CENTERLINE |
| A/C | AIR CONDITIONER |
| ● | POLE |
| >—— | ANCHOR |
| —x—— | FENCE |
| —\\— | POWER LINE |
| PVMT | PAVEMENT |
| W/ | WITH |
| TAN | TANGENT |
| RES | RESIDENCE |
| oLGT | LIGHT |
| COV | COVERED |
| | DECK |
| | CONCRETE |
| | WALL |

LEGAL DESCRIPTION:

A part of Lots 22 and 23, in Block 8, according to the survey of Edgemont, map of which is recorded in the Office of the Judge of Probate of Jefferson County, Alabama, in Map Book 16, at Pages 21 and 22, the property described fronts 65 feet on the Southeast line of Oglesby Avenue, and runs back in a Southeasterly direction of irregular width along the Southwest line of Dixon Avenue 142.12 feet to an alley, said lot measuring 40.65 feet in width across the rear along said alley and the southwest line of said lot being 140 feet in length.

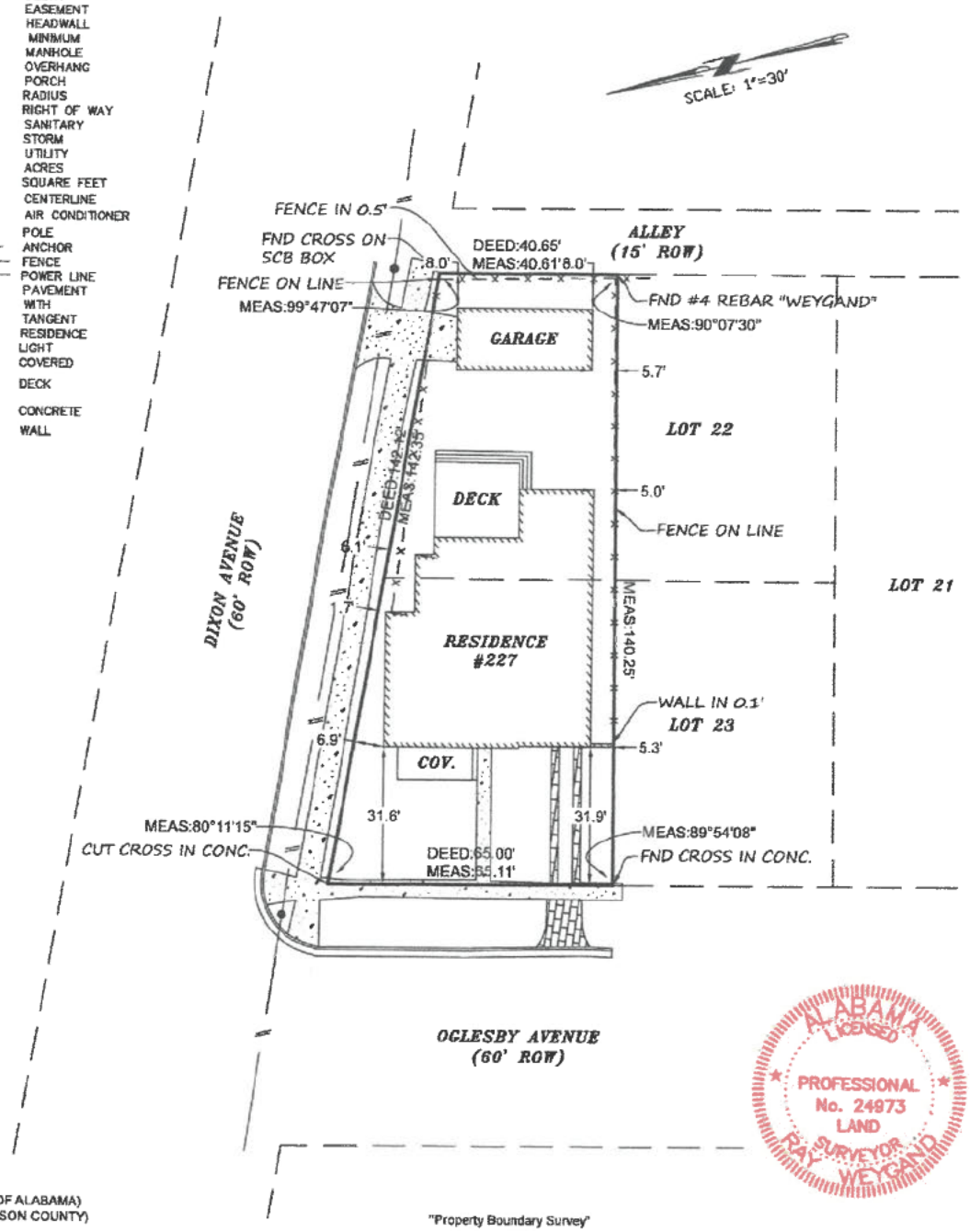


ALABAMA LICENSED PROFESSIONAL No. 24973 LAND SURVEYOR RAY WEYGAND

STATE OF ALABAMA)
JEFFERSON COUNTY)

"Property Boundary Survey"

I, Ray Weygand, a Registered Land Surveyor, hereby state that all parts of this survey and drawing have been completed in accordance with the current requirements of the Standards of Practice for Surveying in the State of Alabama to the best of my knowledge, information and belief; according to my survey of SEPTEMBER 6, 2022. Survey invalid if not sealed in red.

Order No.: 20221418
Purchaser: _____
Address: 227 OGLESBY AVENUE


Ray Weygand, Reg. L.S. #24973
169 Oxmoor Road Homewood, AL 35209
Phone: (205) 942-0086 Fax: (205) 942-0087



WEYGAND SURVEYORS

Note: (a) No title search of the public records has been performed by this firm and land shown hereon was not abstracted for easements and/or rights-of-way, recorded or unrecorded. The parcel shown hereon is subject to setbacks, easements, zoning, and restrictions that may be found in the public records of said county and/or city. (b) All bearings and/or angles, are deed/record map and actual unless otherwise noted. (c) Underground portions of foundations, footings, and/or other underground structures, utilities, cemeteries or burial sites were not located unless otherwise noted. (d) The shown north arrow is based on deed/record map. (e) This survey is not transferable. (f) Easements not shown on recorded map are not shown above.

FRONT

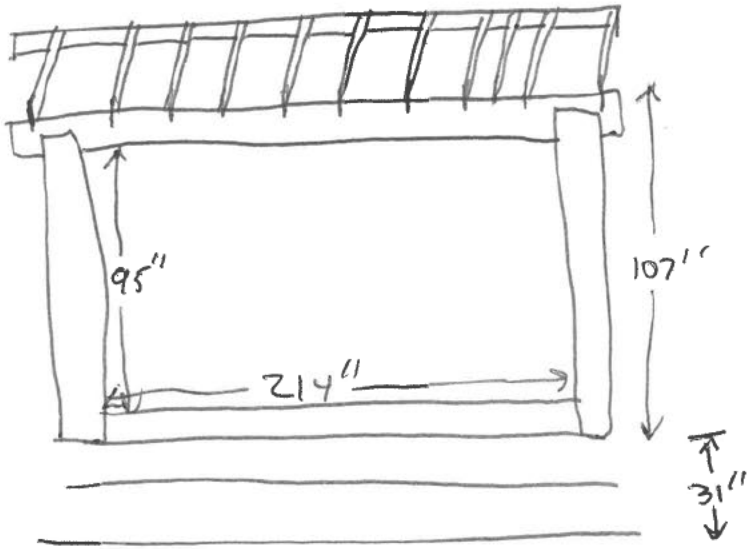


SIDE

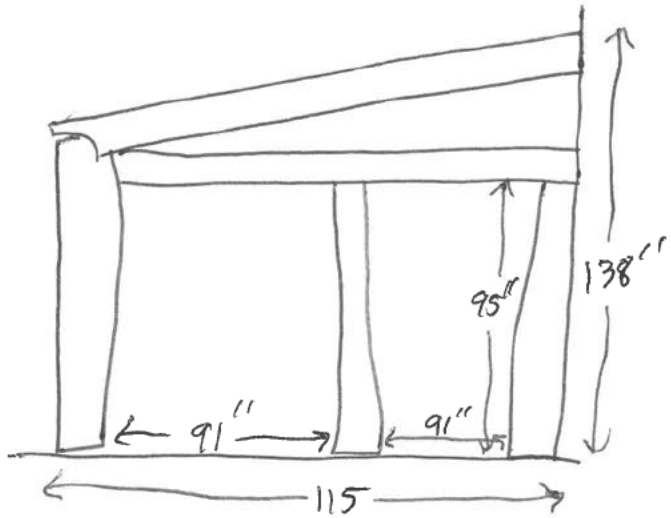


" = INCHES


REPUBLIC

Gmail

Ramey Harrell <rameyh@gmail.com>

# Harrell Residence

**Gus Jelks** < Redacted by City Staff
To: Redacted by City Staff

Thu, Sep 8, 2022 at 11:31 AM

I'm Gus Jelks and I live next door at 225 Oglesby. I have no issues with the Harrell's deck project. Thanks
Gus Jelks
205-821-3385

Sent from my iPhone

Gmail

Ramey Harrell <rameyh@gmail.com>

# Neighborhood Shout-out!

**Logan Gilmore** < Redacted by City Staff
To: "[redacted]" <[redacted]> Redacted by City Staff

Thu, Sep 8, 2022 at 8:51 AM

Logan Gilmore

700 Broadway Street

Homewood, AL 35209

To Whom It May Concern,

My name is Logan Gilmore, my family and I reside at 700 Broadway Street. The intent of this letter is to express complete support behind Ramey Harrell in his construction project. I've had the privilege of knowing the Harrell family for several years. I am confident that the completed project will reflect their love for the Homewood Community. Please feel free to contact me with questions or concerns. As always, thank you for time and service for our community.

Respectfully,

Logan Gilmore, CRNP-BC, RNFA

Cardiac Specialty Nurse Practitioner

3686 Grandview Parkway, Suite 720

Office: 205-971-7566

Mobile: 205-410-1214

lgilmore@alcardio.com

www.theafibclinic.com

CITY OF HOMEWOOD
ENGINEERING & ZONING DEPARTMENT

2850 - 19th Street South - 4th Floor
Homewood, Alabama 35209
Phone 205-332-6800 | Fax 205-332-6955

Patrick McClusky, Mayor Cale Smith, PE, Director

September 30, 2022

Ramey & April Harrell
227 Oglesby Avenue
Homewood, AL 35209

**Dear Owner/Applicant and/or Adjacent Property Owners:**

The owner has petitioned the Homewood Board of Zoning Adjustments for a modification to the Homewood Zoning Ordinance for the property located at:

***SV-22-10-03, 227 Oglesby Avenue, Parcel ID No.: 29 00 13 3 016 001.000***
***Applicants / Property Owners: Ramey & April Harrell***
*A request for a variance to Article IV, District Uses, Sec. A., NPD Neighborhood Preservation District, d. Setbacks, 1. Front, to reduce the setback along the secondary front property line from 10-feet to 6-feet, for a total reduction of 4-feet, to allow for the construction of a roof above an existing uncovered deck.*

The Board of Zoning and Adjustments will consider this petition during a meeting to be held at 6:00 p.m. on Thursday, October 6, 2022, in the Council Chambers (2nd Floor) at Homewood City Hall, 2850 19th Street South. If you prefer not to attend the in-person meeting at City Hall, you may join on-line utilizing the attached Zoom instructions **(SEE INSTRUCTIONS ON THE REVERSE SIDE OF THIS NOTICE)**

This letter will serve as notice to the parties in interest and to all adjacent property owners. Any protest to the above referenced petition will be heard at this time. The applicant and/or owner must participate in the meeting to present their case.

Sincerely,

Sherri Williams
Zoning Supervisor

You may contact our office for further information or questions at (205) 332-6800 OR visit between 7:30 a.m. and 4:30 p.m. Mon-Fri to review any files or drawings pertaining to this application

**Instructions:** Although the proceedings of the meeting may be viewed on-line, please note that anyone wishing to participate in a discussion of the scheduled cases must attend the meeting in Homewood City Hall in person. If you choose to view the meeting via Zoom, please follow the instructions below:

1st Option: Join on-line at www.zoom.us/join
Meeting #: 883 5766 5513
Passcode: 514257

2nd Option: Join through the app if you already have the Zoom app downloaded:
Meeting #: 883 5766 5513
Passcode: 514257

3rd Option: Dial in by phone: 312-626-6799

**Comments in support or opposition to cases on the agenda, may be submitted to the Secretary to the Board of Zoning Adjustments at fred.goodwin@homewoodal.org. Comments should be submitted no later than 24-hours prior to the meeting and will be provided to the board's members for their consideration. Please reference the case number or address in your comments.**

**A copy of the file on this case will be available for review on the City of Homewood's website (cityofhomewood.com) under "Upcoming Meetings/BZA" approximately one week before the scheduled public hearing.**

**The scheduled public hearing will be preceded by a brief work session for Board Members beginning at 5:30 p.m. in the City Council's Committee Workroom located on the 2nd floor behind the Council Chambers.**

CAPture Citizen Access

JEFFERSON COUNTY, ALABAMA. CITIZEN ACCESS PORTAL

WELCOME PROPERTY TAX BOE PERSONAL PROPERTY REDEMPTION

- Search
- Pay Tax
- Assessment
- Forms

227 Oglesby Ave Search

ENTER PART OF THE ADDRESS.

○ Name ○ Parcel # ◉ Address

Tax Year: 2022

1 Record Found. TAX YEAR: 2022

29 00 13 3 016 001.000

| | | | | |
|---|---|---|---|---|
| 1 | OWNER NAME: | HARRELL RAMEY T & APRIL R | RECEIPT NO: | **5107326** |
| | ADDRESS: | 227 OGLESBY AVE<br>BIRMINGHAM AL 35209 | LAND VALUE:<br>IMP VALUE: | **$335,000**<br>**$269,600** |
| | CLASS: | 3 - RESIDENTIAL | TOTAL VALUE: | **$604,600** |
| | EXEMPTION: | 2-2 | APPR. VALUE: | **$604,600** |
| | MUNICIPALITY: | 12 HOMEWOOD | TOTAL TAX: | $4,463.50 |
| | CLASS USE: | | PAID: | $0.00 |
| | | | TOTAL DUE: | **$4,468.50** |

QUICK LINKS

- BOE
- Property Tax
- Assessment
- Collection
- Millage Rate
- Contact Us
- County Site
- ** News **

**Disclaimer:** Information and data provided by any section of this website are being provided "as-is" without warranty of any kind. The information and data may be subject to errors and omissions.

Jefferson County
716 Richard Arrington Jr Blvd N
Birmingham, AL 35203
(205) 325-5500

VISA MasterCard DISCOVER

Powered By: E-Ring, Inc

Website Disclaimer

COMPLETE AND SUBMIT
PRIOR TO THE DEADLINE DATE

City of Homewood
**Board of Zoning Adjustments**
**Request for Variance**

[X] VARIANCE [ ] APPEAL

**ADDRESS OF PROPERTY:** 316 EAST GLENWOOD DR.

**BZA CASE # (assigned by city staff):** SV-22-10-04

**APPLICANT INFORMATION**

Name of Applicant (s): WARREN STEWART

Address of Applicant(s): 316 E GLENWOOD DR

HOMEWOOD ALABAMA 35209
City State Zip

Telephone Number(s) of Applicant(s): Redacted by City Staff

Email : Redacted by City Staff

Property Interest of Applicant(s): owner
(i.e., owner, contract purchaser, agent, architect, contractor, developer, etc)

**OWNER INFORMATION – *If different from Applicant***

Name of Owner(s): Same

Address of Owner(s) (**ONLY** if address is different from property address) otherwise put same:

City State Zip

Email :

Telephone Number(s) of Owner(s):

**DESCRIPTION, USE AND ZONING OF PROPERTY** (Parcel ID & present zoning can be filled out at time of application submittal)

PARCEL IDENTIFICATION NUMBER: 29-00-13-1-020-016.000

PRESENT USE: _____ vacant X residence

_____ commercial (describe):

_____ other (describe):

PRESENT ZONING (per current City map): NPD

COMPLETE AND SUBMIT
PRIOR TO THE DEADLINE DATE



**PLEASE STATE HARDSHIP** – for guidance, see "*What is a Variance*" on page 1 of instructions page:

HOUSE WAS BUILT PRIOR TO CURRENT SETBACK REQUIREMENTS. DESIRE TO ADD TO DWELLING WHILE CONTINUING PLANE OF EXISTING NORTH AND SOUTH EXTERIOR WALLS OF HOUSE. DOING SO WILL MAINTAIN ARCHITECTURAL INTEGRITY OF HOUSE FOR PERIOD IN WHICH IT WAS BUILT.

**PURPOSE OF VARIANCE**

A variance is requested on the property described below in conformity with the powers vested in the Board to permit:

- X the construction of an addition to a residence,
- ___ the construction of residence,
- ___ the construction of an addition to a commercial structure,
- ___ the construction of a commercial structure,
- ___ other (describe):_____

COMPLETE AND SUBMIT
PRIOR TO THE DEADLINE DATE

City of Homewood
**Board of Zoning Adjustments**
**Request for Variance**

## INDICATE THE FOLLOWING

***The following information can be completed when applying but applicant must bring a survey to verify:***

| | *Required by Zoning Regulations | Setback dimensions As they **NOW** exist | Setback dimensions **AFTER** construction | FINAL Setback Variance Requested |
|---|---|---|---|---|
| Front Bldg. Setback Street: | | 39.5' | 39.5' | |
| Front Bldg. Setback Street: (secondary - corner lot) | | | | |
| Right Bldg. Setback | 10 | 9.6 ~~5.6~~ | 9.6 ~~5.6~~ | .4-feet (5-inches) |
| Left Bldg. Setback | | 12.8' | 12.8' | |
| Rear Bldg. Setback | | 32' | 32' | |
| Accessory Structure Setback: side/rear | – | – | – | |
| | As Required | Existing NOW | Proposed | Variance Required |
| Lot Area | | | | |
| Lot Width | | | | |
| Parking | | | | |
| Height of Structure | | | | |
| Lot Coverage | | | | |

*For required setback information, please refer to the Zoning Ordinance Book, which is available on the City of Homewood website. If you need to find out how your property is zoned, please contact the zoning department by calling 332-6828 or 332-6854 or by clicking on the following link to email: Zoning Information.

*The undersigned hereby grants permission for a sign, advertising the BZA hearing date, time and place to be posted on my property. I (we) attach $100.00 application fee and promise to pay any additional costs billed separately for extra items related to this variance request.*

*I (we) certify that all of the above statements and the statements contained in any paper of plans submitted herewith are true to the best of my (our) knowledge and belief.*

Redacted by City Staff

Signature of Applicant — Date: 7-8-2022

Signature of Owner — Date

Signature of Owner — Date

# City of Homewood BZA Case Map

**316 E Glenwood Dr.**

**SV 22-10-04**

**Aerial Photo**


Subject Property

Parcels

N

0 12.5 25 50 Feet

THE INFORMATION ON THIS DRAWING WAS COMPILED FROM SERVERAL SOURCES AND SHOULD ONLY BE USED FOR GEREAL INFORMATION AND ORENTATION. THIS DRAWING IS THE PROPERTY OF THE CITY OF HOMEWOOD AND ITS USE BY ANYONE FOR ANY PURPOSE OTHER THAN THAT SPECIFICALLY AUTHORIZED BY THE CITY OF HOMEWOOD IS PROHIBITED.

ZONING IS SUBJECT TO CHANGE. PLEASE CALL ZONING OFFICE TO CONFIRM ZONING. 332-6828

## REYNOLDS SURVEYING CO., INC.

*Surveying – Land Planning*

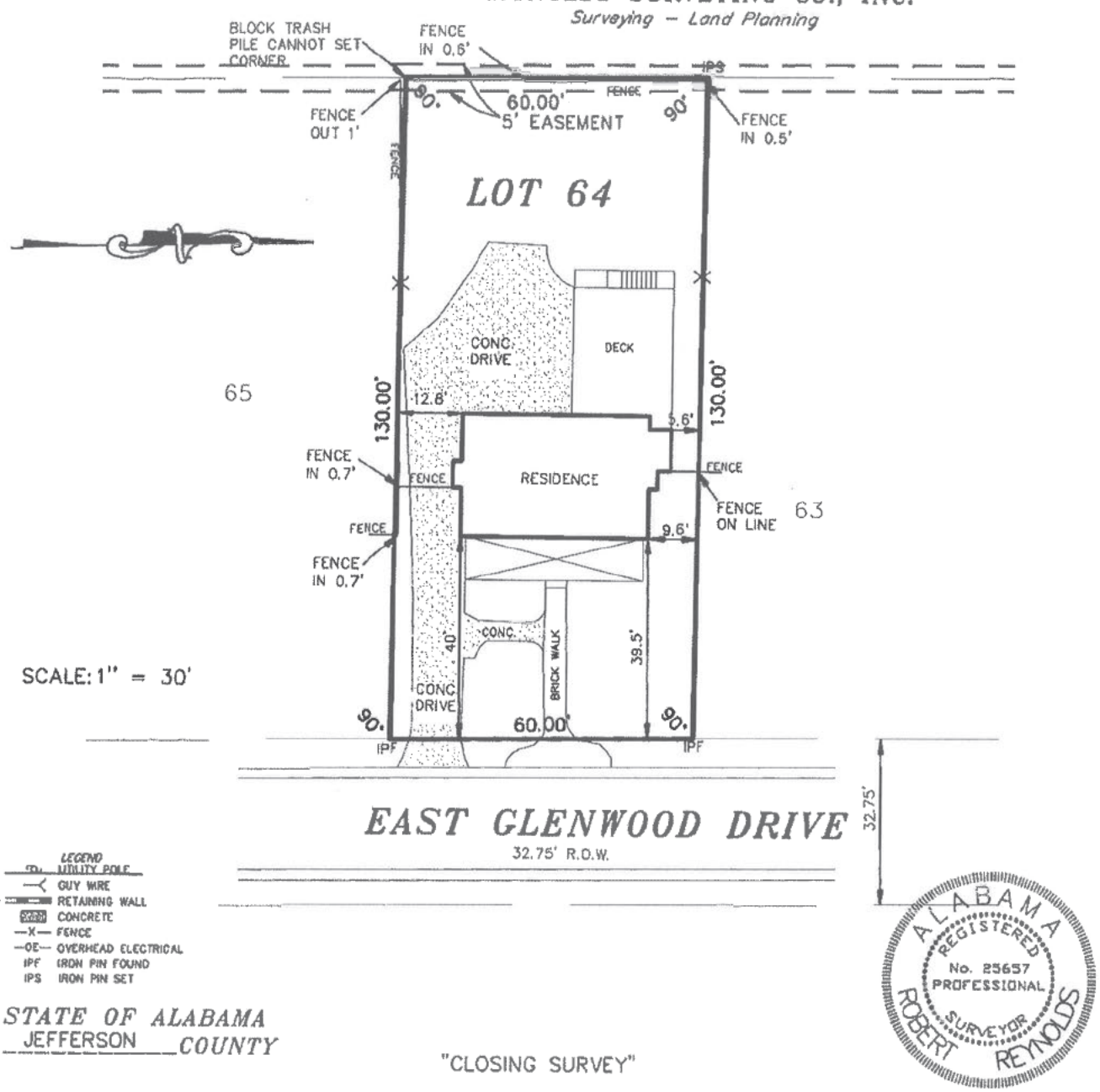


LEGEND
- UTILITY POLE
- GUY WIRE
- RETAINING WALL
- CONCRETE
- —X— FENCE
- —OE— OVERHEAD ELECTRICAL
- IPF IRON PIN FOUND
- IPS IRON PIN SET

ALABAMA REGISTERED No. 25657 PROFESSIONAL SURVEYOR ROBERT REYNOLDS

*STATE OF ALABAMA*
JEFFERSON *COUNTY*

"CLOSING SURVEY"

*I, Robert Reynolds, a Registered Surveyor, do here by state that this is a true and correct plat or map of Lot* 64, *Block* –, *of* SHADES PARK ADDITION TO HOMEWOOD, *as recorded in Map Book* 18, *Page* 43 *in the Office of the Judge Of Probate in* Shelby *County, Alabama. All parts of this survey and drawing have been completed in accordance with the current requirements of the Standards of Practice of Surveying in the State of Alabama to the best of my knowledge, information and belief. The improvements on said premises are as shown. There are no visible encroachments on over or across said lands except as shown. According to my survey this the* 18th *day of* June, 2020.

*NOTE: This survey is not transferable to any additional institutions or subsequent owners.*

Robert Reynolds
*Reg. No. 25657*

*Address:* 316 E. Glenwood Dr.

**RE NOLDS SURVEYING CO., INC.**
*Surveying – Land Planning*

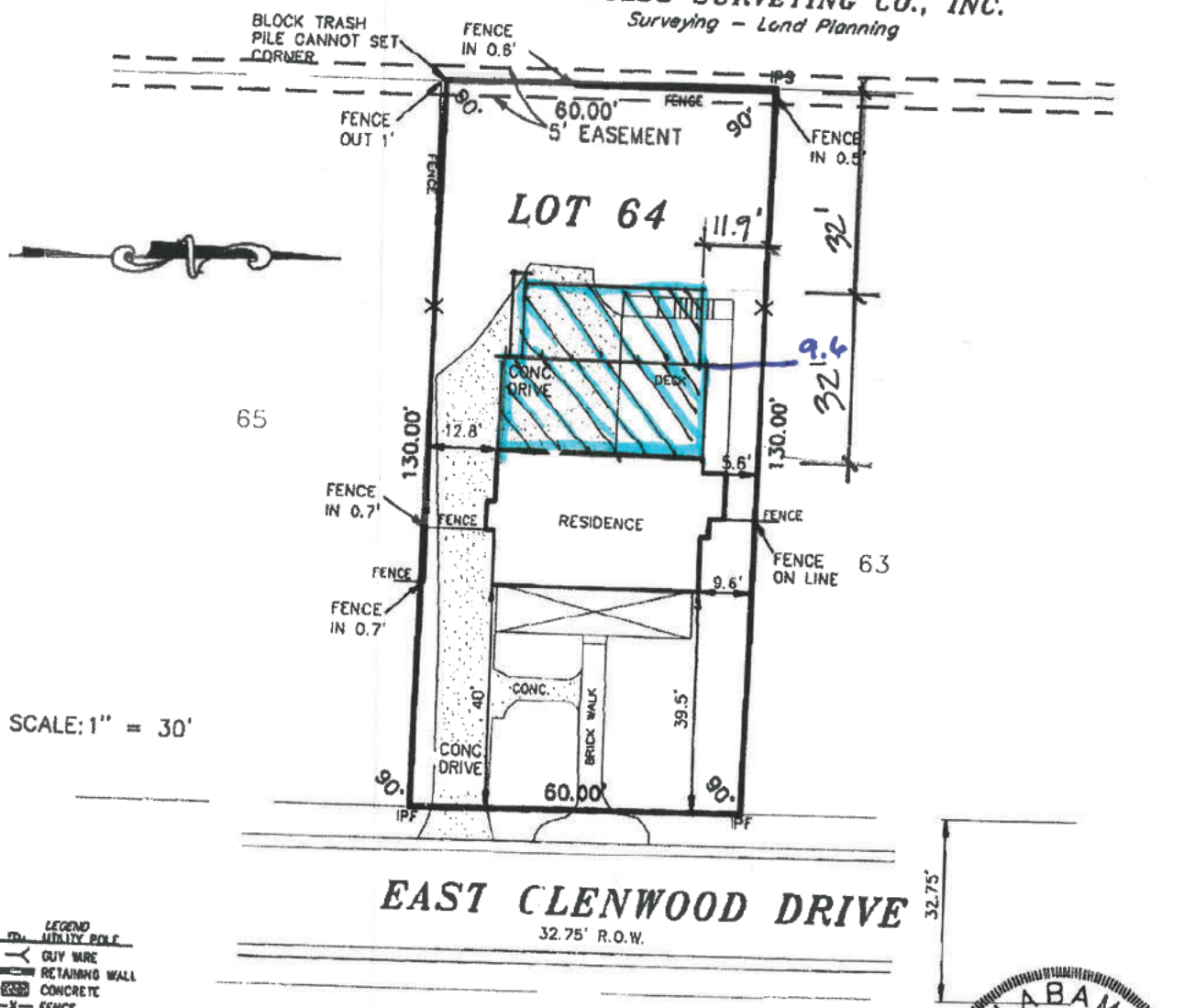


LEGEND
UTILITY POLE
GUY WIRE
RETAINING WALL
CONCRETE
—X— FENCE
—OE— OVERHEAD ELECTRICAL
IPF IRON PIN FOUND
IPS IRON PIN SET

ALABAMA REGISTERED No. 25657 PROFESSIONAL SURVEYOR ROBERT REYNOLDS

*STATE OF ALABAMA*
JEFFERSON *COUNTY*

"CLOSING SURVEY"

*I, Robert Reynolds, a Registered Surveyor, do here by state that this is a true and correct plat or map of Lot* 64, *Block* –, *of* SHADES PARK ADDITION TO HOMEWOOD, *Book* 18, *Page* 43 *in the Office of the Judge Of Probate in* Shelby *County, Alabama. All parts of this survey and drawing have been completed in accordance with the cu rent requirements of the Standards of Practice of Surveying in the State of Alabama to the best of my knowledge, information and belief. The improvements on said premises are as shown. There are no visible encroachments on over or across said lands except as shown. According to my survey this the* 18th *day of* June, 2020.

*NOTE: This survey is not transferable to any additional institutions or subsequent owners.*

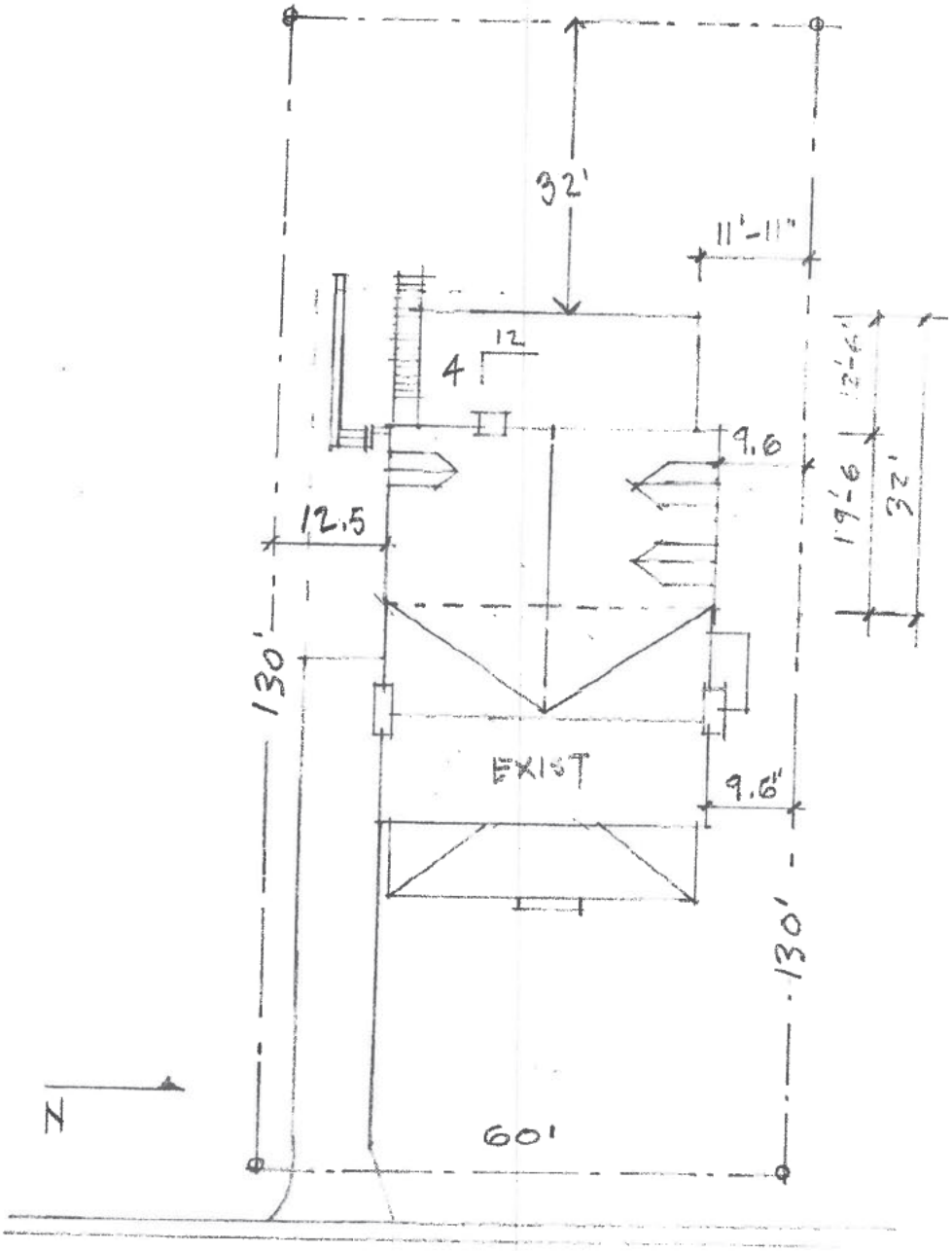


EAST GLENWOOD DRIVE

SITE PLAN

1:20

**E-RECORDED** simplifile

ID: _____

County: _____

Date: _____ Time: _____

THIS INSTRUMENT PREPARED BY:
Jeff W. Parmer
Law Offices of Jeff W. Parmer, LLC
2204 Lakeshore Drive, Suite 125
Birmingham, AL 35209

SEND TAX NOTICE TO:
Warren Stewart
Katherine Stewart
316 East Glenwood Drive
Birmingham, AL 35209

**STATE OF ALABAMA )**

**COUNTY OF JEFFERSON )**

**JOINT SURVIVORSHIP DEED**

KNOW ALL MEN BY THESE PRESENTS: That, for and in consideration of Redacted by City Staff Redacted by City Staff nd other good and valuable consideration, this day in hand paid to the undersigned GRANTORS, **Patrick D. Corwith, and spouse, MaryBeth Corwith** (hereinafter referred to as GRANTORS), the receipt whereof is hereby acknowledged, the GRANTORS do hereby give, grant, bargain, sell and convey unto the GRANTEES, **Warren Stewart and Katherine Stewart** (hereinafter referred to as GRANTEES), for and during their joint lives and upon the death of either, then to the survivor of them in fee simple, together with every contingent remainder and right of reversion, the following described Real Estate, lying and being in the County of **Jefferson,** State of Alabama, to-wit:

**Lot 64, according to the Survey of Shades Park, an Addition to the City of Homewood, as recorded in Map Book 18, page 43, in the Probate Office of Jefferson County, Alabama.**

Subject to existing easements, current taxes, restrictions, set-back lines and rights of way, if any, of record.

**Property Address: 316 East Glenwood Drive Birmingham, AL, 35209**

Redacted by City Staff f the above-recited purchase price was paid from a mortgage loan closed simultaneously herein.

TO HAVE AND TO HOLD, the tract or parcel of land above described together with all and singular the rights, privileges, tenements, appurtenances, and improvements unto the said GRANTEES, as joint tenants, with right of survivorship, their heirs and assigns forever; it being the intention of the parties to this conveyance, that (unless the joint tenancy hereby created is severed or terminated during the joint lives of the GRANTEES herein) in the event one grantee herein survives the other, the entire interest in fee simple shall pass to the surviving grantee, and, if one does not survive the other, then the heirs and assigns of the GRANTEES herein shall take as tenants in common, forever.

AND SAID GRANTORS, for said GRANTORS, GRANTORS' heirs, successors, executors and administrators, covenants with GRANTEES, and with GRANTEES' heirs and assigns, that GRANTORS are lawfully seized in fee simple of the said Real Estate; that said Real Estate is free and clear from all Liens and Encumbrances, except as herein above set forth, and except for taxes due for the current and subsequent years, and except for any Restrictions pertaining to the Real Estate of record in the Probate Office of said County; and that GRANTORS will, and GRANTORS' heirs, executors and administrators shall, warrant and defend the same to said GRANTEES, and GRANTEES' heirs and assigns, forever against the lawful claims of all persons.

IN WITNESS WHEREOF, said GRANTORS have hereunto set their hands and seals this **May 6, 2022.**

Redacted by City Staff

**Patrick D. Corwith**

Redacted by City Staff

**MaryBeth Corwith**

STATE OF ALABAMA )
:
COUNTY OF JEFFERSON)

I, the undersigned, a Notary Public, in and for said County and State, hereby certify that **Patrick D. Corwith and MaryBeth Corwith,** whose names are signed to the foregoing conveyance and who are known to me, acknowledged before me on this day that, being informed of the contents of the Instrument, they signed their names voluntarily on the day the same bears date.

IN WITNESS WHEREOF, I have hereunto set my hand and seal this **May 6, 2022.**

**Jeff W. Parmer**

NOTARY PUBLIC
My Commission Expires: 09/13/2024

STATE OF ALABAMA NOTARY PUBLIC
JEFFREY WADE PARMER
My Commission Expires
September 13, 2024

CITY OF HOMEWOOD
ENGINEERING & ZONING DEPARTMENT

2850 - 19th Street South - 4th Floor
Homewood, Alabama 35209
Phone 205-332-6800 | Fax 205-332-6955

Patrick McClusky, Mayor Cale Smith, PE, Director

September 30, 2022

Warren & Katherine Stewart
316 East Glenwood Drive
Homewood, Alabama 35209

**Dear Owner/Applicant and/or Adjacent Property Owners:**

The owner has petitioned the Homewood Board of Zoning Adjustments for a modification to the Homewood Zoning Ordinance for the property located at:

> ***SV-22-10-04, 316 East Glenwood Drive, Parcel ID No.: 29 00 13 1 020 016.000***
> ***Applicants / Property Owners: Warren & Katherine Stewart***
> *A request for a variance to Article IV, District Uses, Sec. A., NPD Neighborhood Preservation District, d. Setbacks, 2. Side, to reduce the setback along the right-side property line from 10-feet to 9.6-feet, for a total reduction of .4-feet (5-inches), to allow for the construction of an addition at the rear of an existing, non-conforming single-family dwelling.*

The Board of Zoning and Adjustments will consider this petition during a meeting to be held at 6:00 p.m. on Thursday, October 6, 2022, in the Council Chambers (2nd Floor) at Homewood City Hall, 2850 19th Street South. If you prefer not to attend the in-person meeting at City Hall, you may join on-line utilizing the attached Zoom instructions **(SEE INSTRUCTIONS ON THE REVERSE SIDE OF THIS NOTICE)**

This letter will serve as notice to the parties in interest and to all adjacent property owners. Any protest to the above referenced petition will be heard at this time. The applicant and/or owner must participate in the meeting to present their case.

Sincerely,

Sherri Williams
Zoning Supervisor

You may contact our office for further information or questions at (205) 332-6800 OR visit between 7:30 a.m. and 4:30 p.m. Mon-Fri to review any files or drawings pertaining to this application

**Instructions:** Although the proceedings of the meeting may be viewed on-line, please note that anyone wishing to participate in a discussion of the scheduled cases must attend the meeting in Homewood City Hall in person. If you choose to view the meeting via Zoom, please follow the instructions below:

1st Option: Join on-line at www.zoom.us/join
Meeting #: 883 5766 5513
Passcode: 514257

2nd Option: Join through the app if you already have the Zoom app downloaded:
Meeting #: 883 5766 5513
Passcode: 514257

3rd Option: Dial in by phone: 312-626-6799

**Comments in support or opposition to cases on the agenda, may be submitted to the Secretary to the Board of Zoning Adjustments at fred.goodwin@homewoodal.org. Comments should be submitted no later than 24-hours prior to the meeting and will be provided to the board's members for their consideration. Please reference the case number or address in your comments.**

**A copy of the file on this case will be available for review on the City of Homewood's website (cityofhomewood.com) under "Upcoming Meetings/BZA" approximately one week before the scheduled public hearing.**

**The scheduled public hearing will be preceded by a brief work session for Board Members beginning at 5:30 p.m. in the City Council's Committee Workroom located on the 2nd floor behind the Council Chambers.**

CAPture Citizen Access

JEFFERSON COUNTY, ALABAMA. CITIZEN ACCESS PORTAL

WELCOME PROPERTY TAX BOE PERSONAL PROPERTY REDEMPTION

- Search
- Pay Tax
- Assessment
- Forms

| | |
|---|---|
| **PARCEL #:** | **29 00 13 1 020 016.000** |
| **OWNER:** | CORWITH PATRICK D & MARYBETH |
| **ADDRESS:** | 316 E GLENWOOD DR HOMEWOOD AL 35209-5434 |
| **LOCATION:** | 316 EAST GLENWOOD DR BHAM AL 35209 |

| | | |
|---|---|---|
| **[ 111-C+ ]** | Baths: **2.0** | H/C Sqft: **2,024** |
| **16-005.0** | Bed Rooms: **5** | Land Sch: **G1** |
| Land: **290,000** | Imp: **293,000** | Total: **583,000** |
| Acres: **0.000** | Sales Info: **06/26/2020** | **$430,000** |

<< Prev Next >> [ 1 / 1 Records ] Processing...

Tax Year : 2022

SUMMARY LAND BUILDINGS SALES PHOTOGRAPHS MAPS

QUICK LINKS
- BOE
- Property Tax
- Assessment
- Collection
- Millage Rate
- Contact Us
- County Site
- News



Jefferson County
716 Richard Arrington Jr Blvd N
Birmingham, AL 35203
(205) 325-5500

## SUMMARY

### ASSESSMENT

| | | | |
|---|---|---|---|
| PROPERTY CLASS: | 3 | OVER 65 CODE: | |
| EXEMPT CODE: | 2-2 | DISABILITY CODE: | |
| MUN CODE: | 12 HOMEWOOD | HS YEAR: | 2021 |
| SCHOOL DIST: | | EXM OVERRIDE AMT: | $0.00 |
| OVR ASD VALUE: | $0.00 | TOTAL MILLAGE: | 75 |
| CLASS USE: | | | |
| FOREST ACRES: | 0 | TAX SALE: | |
| PREV YEAR VALUE: | $498,100.00 | BOE VALUE: | 0 |

### VALUE

| | | |
|---|---|---|
| LAND VALUE 10% | | $290,000 |
| LAND VALUE 20% | | $0 |
| CURRENT USE VALUE | [DEACTIVATED] | $0 |
| CLASS 2 | | |
| CLASS 3 | | |
| BLDG 001 | 111 | $293,000 |
| TOTAL MARKET VALUE **[APPR. VALUE: $583,000]**: | | $583,000 |

Assesment Override:

MARKET VALUE:
CU VALUE:
PENALTY:
ASSESSED VALUE:

### TAX INFO

| | CLASS | MUNCODE | ASSD. VALUE | TAX | EXEMPTION | TAX EXEMPTION | TOTAL TAX |
|---|---|---|---|---|---|---|---|
| STATE | 3 | 12 | $58,300 | $378.95 | $4,000 | $26.00 | $352.95 |
| COUNTY | 3 | 12 | $58,300 | $787.05 | $2,000 | $27.00 | $760.05 |
| SCHOOL | 3 | 12 | $58,300 | $478.06 | $0 | $0.00 | $478.06 |
| DIST SCHOOL | 3 | 12 | $58,300 | $0.00 | $0 | $0.00 | $0.00 |
| CITY | 3 | 12 | $58,300 | $1,848.11 | $2,000 | $18.00 | $1,830.11 |
| FOREST | 3 | 12 | $0 | $0.00 | $0 | $0.00 | $0.00 |
| SPC SCHOOL1 | 3 | 12 | $58,300 | $320.65 | $0 | $0.00 | $320.65 |
| SPC SCHOOL2 | 3 | 12 | $58,300 | $559.68 | $0 | $0.00 | $559.68 |

TOTAL FEE & INTEREST: (Detail) $5.00

**ASSD. VALUE: $58,300.00** **$4,372.50** **GRAND TOTAL: $4,306.50**

Payoff Quote

### DEEDS

| INSTRUMENT NUMBER | DATE |
|---|---|
| 2022051088 | 5/6/2022 |
| 2020068032 | 6/26/2020 |
| 4313-195 | 05/16/1992 |

### PAYMENT INFO

| PAY DATE | TAX YEAR | PAID BY | AMOUNT |
|---|---|---|---|
| | 2022 | | $0.00 |
| 12/9/2021 | 2021 | CORELOGIC | $3,670.49 |
| 12/8/2020 | 2020 | CORELOGIC, INC. | $3,646.50 |
| 11/5/2019 | 2019 | NATIONSTAR MORTGAGE LLC DBA MR. COOPER | $3,310.49 |
| 11/29/2018 | 2018 | LERETA, LLC | $3,027.00 |
| 11/17/2017 | 2017 | CORE LOGIC INC | $2,839.50 |
| 11/21/2016 | 2016 | CORELOGIC | $2,672.99 |
| 12/1/2015 | 2015 | CORELOGIC INC | $2,475.01 |
| 12/2/2014 | 2014 | CORELOGIC INC | $2,507.99 |
| 11/19/2013 | 2013 | CORELOGIC INC | $2,507.99 |
| 11/16/2012 | 2012 | BAC TAX SERVICES CORPORATION | $2,454.00 |
| 20111208 | 2011 | *** | $2,474.26 |
| 20101203 | 2010 | *** | $2,474.26 |
| 20091205 | 2009 | *** | $2,474.26 |
| 20081115 | 2008 | *** | $2,652.77 |
| 20071123 | 2007 | *** | $2,754.00 |
| 20061207 | 2006 | *** | $2,615.27 |
| 20051018 | 2005 | *** | $2,192.99 |

COMPLETE AND SUBMIT
PRIOR TO THE DEADLINE DATE

City of Homewood
**Board of Zoning Adjustments**
**Request for Variance**

[X] **VARIANCE** - Revised - [ ] **APPEAL**

**ADDRESS OF PROPERTY:** 190 Vulcan Road Birmingham, AL 35209

**BZA CASE # (assigned by city staff):** SV # 22-10-05

**APPLICANT INFORMATION**

Name of Applicant (s): Caprine Engineering, LLC

Address of Applicant(s): 200 Office Park Drive, Suite 215

Birmingham (City) AL (State) 35223 (Zip)

Telephone Number(s) of Applicant(s): (205) 423-5082

Email : chris.eck[illegible]aprineeng.com ty.tidwell@caprineeng.com

Property Interest of Applicant(s): Civil Engineer
(i.e., owner, contract purchaser, agent, architect, contractor, developer, etc)

**OWNER INFORMATION** – ***If different from Applicant***

Name of Owner(s): Hussein Mawani

Address of Owner(s) (**ONLY** if address is different from property address) otherwise put same:

3501 4th Avenue S. Birmingham (City) AL (State) 35222 (Zip)

Email : Redacted by City Staff

Telephone Number(s) of Owner(s): (Redacted by City Staff

**DESCRIPTION, USE AND ZONING OF PROPERTY** (Parcel ID & present zoning can be filled out at time of application submittal)

PARCEL IDENTIFICATION NUMBER: 29-00-14-3-004-004.001

PRESENT USE: X vacant _____ residence

_____ commercial (describe): _____

_____ other (describe): _____

PRESENT ZONING (per current City map): C-5 General Business District

COMPLETE AND SUBMIT
PRIOR TO THE DEADLINE DATE



**PLEASE STATE HARDSHIP** – for guidance, see "*What is a Variance*" on page 1 of instructions page:

The currently vacant building to be redeveloped into a car dealership has 79,693 SF of floor area. The owner has plans to use 40,225 SF of the floor area with the remaining building left as an open shell space with no future plans to expand. For C-5 zoning, two parking spaces are required per 1000 SF of floor area. The required parking equals 160 parking spaces. The parking required for the planned developed building area at current parking requirements equals 81 parking spaces. The site currently has 106 spaces. The owner intends to utilize roughly 40-50 parking spaces to display cars for sale at any time, leaving 31 parking spaces for customer parking. Therefore, we request a parking variance from 160 parking spaces to 106 parking spaces, which exceeds the parking space requirement for the actual usable floor area. We also request a variance for parking island requirements in Sec I. Other Landscaping Requirements 3) Interior Island Landscape Area Requirements. The previously developed site would require a further reduction in parking with the inclusion of parking islands every 10 spaces. We request to eliminate the need to add parking islands to the site by meeting the minimum tree count elsewhere around the site. We also request a variance to use the existing 20 parking spaces within the building setback for vehicular sales. To not allow sales would render the existing parking within the building setback useless. The existing parking lot within the building setback would be generously screened with landscaping to obstruct the view from the ROW to the portion of vehicles located within the building setback.□ □

**PURPOSE OF VARIANCE**

A variance is requested on the property described below in conformity with the powers vested in the Board to permit:

___ the construction of an addition to a residence,
___ the construction of residence,
___ the construction of an addition to a commercial structure,
___ the construction of a commercial structure,
_X_ other (describe): Parking Variance and Interior Island Landscape Area Requirements, Vehicular Storage for Sales within the Building Setback.

COMPLETE AND SUBMIT
PRIOR TO THE DEADLINE DATE

# City of Homewood
## Board of Zoning Adjustments
## Request for Variance

**INDICATE THE FOLLOWING**
***The following information can be completed when applying but applicant must bring a survey to verify:***

| | *Required by Zoning Regulations | Setback dimensions As they **NOW** exist | Setback dimensions **AFTER** construction | FINAL Setback Variance Requested |
|---|---|---|---|---|
| Front Bldg. Setback Street: | | | | |
| Front Bldg. Setback Street: (secondary - corner lot) | | | | |
| Right Bldg. Setback | | | | |
| Left Bldg. Setback | | | | |
| Rear Bldg. Setback | | | | |
| Accessory Structure Setback: side/rear | | | | |
| | As Required | Existing NOW | Proposed | Variance Required |
| Lot Area | | | | |
| Lot Width | | | | |
| Parking | 160 | 106 | 106 | 54 |
| Height of Structure | | | | |
| Lot Coverage | | | | |

*For required setback information, please refer to the Zoning Ordinance Book, which is available on the City of Homewood website. If you need to find out how your property is zoned, please contact the zoning department by calling 332-6828 or 332-6854 or by clicking on the following link to email: Zoning Information.

*The undersigned hereby grants permission for a sign, advertising the BZA hearing date, time and place to be posted on my property. I (we) attach $100.00 application fee and promise to pay any additional costs billed separately for extra items related to this variance request.*

*I (we) certify that all of the above statements and the statements contained in any paper of plans submitted herewith are true to the best of my (our) knowledge and belief.*

Redacted by City Staff

Signature of Applicant — Date: 8/30/22

Signature of Owner — Date: 09/08/22

Signature of Owner — Date

# City of Homewood BZA Case Map

**190 Vulcan Rd.**

**SV 22-10-05**

**Aerial Photo**


Subject Property

Parcels

N

0 65 130 260 Feet

THE INFORMATION ON THIS DRAWING WAS COMPILED FROM SERVERAL SOURCES AND SHOULD ONLY BE USED FOR GEREAL INFORMATION AND ORENTATION. THIS DRAWING IS THE PROPERTY OF THE CITY OF HOMEWOOD AND ITS USE BY ANYONE FOR ANY PURPOSE OTHER THAN THAT SPECIFICALLY AUTHORIZED BY THE CITY OF HOMEWOOD IS PROHIBITED.

ZONING IS SUBJECT TO CHANGE. PLEASE CALL ZONING OFFICE TO CONFIRM ZONING. 332-6828

CAPRINE
PLANNING · CIVIL ENGINEERING · CONSULTING

September 7, 2022

Ira Holding Inc.
3501 4th Avenue S.
Birmingham, AL 35222

**Re: Affidavit – Applicant and Authorized Applicant**
**190 Vulcan Road, Homewood, AL [PIN: 29-00-14-3-004-004.001]**

To Whom it May Concern:

In an effort to confirm information submitted on an application for a **parking variance request** through the **City of Homewood** for the above-described property, please confirm that **Birmingham Luxury Motors** is authorized to serve as **applicant** for this request on the above-described property and that **Caprine Engineering, LLC** is authorized as **agent of the applicant** for this request on the same property.

Please sign below and return at your earliest convenience to confirm.

Thank you.

Sincerely,
**Caprine Engineering, LLC**

Redacted by City Staff

E. Chris Eckroate, P.E.
Principal

**Owner:**
**Ira Holding Inc.**
**Name & Title (printed):**

Redacted by City Staff

**Signed:**_____ **Date:** 09/08/22


190

## GENERAL PLANTING NOTES

1. CONTRACTOR SHALL BE RESPONSIBLE FOR THE SITE INSPECTION PRIOR TO LANDSCAPE CONSTRUCTION AND INSTALLATION IN ORDER TO ACQUAINT HIMSELF WITH EXISTING CONDITIONS.
2. THE LOCATION OF ALL SURFACE AND UNDERGROUND STRUCTURES AND UTILITIES SHALL BE VERIFIED BY THE CONTRACTOR AT GROUND BREAK. THE CONTRACTOR SHALL BE RESPONSIBLE FOR PROTECTING ALL EXISTING STRUCTURES AND UTILITIES TO REMAIN FROM DAMAGE AS REQUIRED DURING CONSTRUCTION, AND TO REPAIR ANY DAMAGE WHICH SHOULD OCCUR TO THE SATISFACTION OF THE OWNER AND/OR DAMAGED PARTY.
3. CONTRACTOR SHALL VERIFY PLANT COUNT FROM PLAN AND REPORT DIFFERENCES PRIOR TO CONSTRUCTION.
4. ALL PLANTING AREAS SHALL BE FREE OF OBSTRUCTIONS LARGER THAN 1 1/2" IN SIZE.
5. TREES ARE PURCHASED BY OWNER FOR CONTRACTOR'S INSTALLATION.
6. ALL PLANT MATERIALS ARE SUBJECT TO APPROVAL OR REFUSAL BY THE LANDSCAPE ARCHITECT AT THE JOB SITE.
7. THE LOCATION OF ALL TREES SHALL BE APPROVED BY THE LANDSCAPE ARCHITECT BEFORE THE PREPARATION OF BEDS. PLANTING SHALL BE LOCATED WHERE SHOWN ON THE DRAWINGS OR WHERE FIELD LOCATED BY THE LANDSCAPE ARCHITECT.
8. TREES WITH LOW LIMBS SHALL BE LOCATED WHERE LIMBS WILL NOT OVERHAND SIDEWALK OR VEHICLE LOADS. LIMBS NEED BE ABOVE THE SIDEWALK BEFORE LANDSCAPE ARCHITECT BEFORE RELOCATING TREES OR REMOVING LIMBS.
9. MINIMIZE ALL ROOT DISTURBANCE WITHIN THE DRIP LINE OF EXISTING TREES.
10. CONTRACTOR SHALL SUPPLY AND SPREAD TOPSOIL IN SHRUB BEDS AS SHOWN IN THE DRAWINGS.
11. THE LANDSCAPE CONTRACTOR SHALL PROVIDE APPROVED TOPSOIL TO PERFORM INCIDENTAL GRADING WORK.
12. CONTRACTOR SHALL BE RESPONSIBLE FOR PROVIDING POSITIVE DRAINAGE IN ALL PLANT AREAS.
13. PLANTS SHALL BE WELL-FORMED, VIGOROUS GROWING SPECIMENS WITH GROWTH TYPICAL OF VARIETIES SPECIFIED, AND SHALL BE FREE FROM INJURY, INSECTS, AND DISEASES. PLANTS SHALL EQUAL OR SURPASS QUALITY AS DEFINED IN THE CURRENT ISSUE OF "AMERICAN STANDARDS FOR NURSERY STOCK" AS PUBLISHED BY AMERICAN HORTORIS.
14. ALL PLANT MATERIAL SHALL BE BALLED AND BURLAPPED OR CONTAINER GROWN.
15. ALL SHRUBS, TREES, AND GROUNDCOVERS SHALL BE PLANTED WITH A SOIL MIXTURE CONSISTING OF 50% TOPSOIL AND ORGANIC MATERIAL, AND PER SPECIFICATIONS.
16. FRONT NOSE OF SHRUBS SHALL BE PLANTED MINIMUM 12" BEYOND SIDELINE AT LAWNS OR WALKS, AND MINIMUM 12" FROM BACK OF CURB AT PARKING AREAS.
17. ALL PLANTING BEDS AND TREE PITS SHALL BE MULCHED WITH A 3" SETTLED LAYER OF SHREDDED FINE STRAW MULCH.
18. ALL DISTURBED AREAS NOT PLANTED WITH SHRUBS, TREES, OR SOD, SHALL BE SEEDED.
19. SEASONAL COLOR SHALL BE PLANTED IN FLOWERING STATE.
20. CONTRACTOR SHALL GUARANTEE ALL PLANT MATERIAL, INCLUDING GRASS, FOR ONE FULL YEAR FROM DATE OF SUBSTANTIAL COMPLETION.
21. ALL TREES AND SHRUBS TO BE MAINTAINED WITH "TERRA-SORB" WATER RETAINING AGENT OR APPROVED EQUAL, PER MANUFACTURER'S RECOMMENDATIONS.



2 TREE PLANTING DETAIL
Scale: NOT TO SCALE



1 TYPICAL CONTAINER SHRUB PLANTING DETAIL
Scale: NOT TO SCALE

## IRRIGATION NOTES (DESIGN-BUILD)

1. THE IRRIGATION CONTRACTOR SHALL VERIFY THE PRESSURE AND FLOW PRIOR TO COMMENCEMENT OF CONSTRUCTION. REPORT TO THE OWNER OR OWNER'S REPRESENTATIVE ANY DIFFERENCES BETWEEN THE PRESSURE INDICATED AND THE ACTUAL PRESSURE READING AT THE POINT OF CONNECTION. ACTUAL LAYOUT OF PIPING, SPRINKLER HEADS, VALVES, CONTROLLERS, AND OTHER RELATED EQUIPMENT SHALL BE DETERMINED ON SITE. MINOR FIELD CHANGES SHALL BE MADE AT NO ADDITIONAL COST TO OWNER.
2. ALL PIPING, VALVES, HEADS, ETC., SHALL BE LOCATED INSIDE OF THE PLANTED AREA APPROXIMATELY 1' FROM ANY HARDSCAPE.
3. IT IS THE RESPONSIBILITY OF THE IRRIGATION CONTRACTOR TO FAMILIARIZE HIMSELF WITH THE SITE, ALL GRADE DIFFERENCES, LOCATIONS OF WALLS, AND INSTALLED UTILITIES. COORDINATE WORK WITH THE OWNER OR GENERAL CONTRACTOR AND OTHER SUBCONTRACTORS FOR THE LOCATION AND INSTALLATION OF PIPE SLEEVES UNDERNEATH PAVEMENT AND THROUGH WALLS.
4. THE IRRIGATION CONTRACTOR SHALL CAREFULLY INVESTIGATE THE STRUCTURAL AND FINISHED CONDITIONS AFFECTING HIS/HER WORK AND PLAN HIS/HER WORK ACCORDINGLY. FURNISHING SUCH FITTINGS, ETC. AS MAY BE REQUIRED TO MEET SUCH CONDITIONS. ALL WORK SHALL BE INSTALLED IN SUCH A MANNER AS TO AVOID CONFLICTS BETWEEN IRRIGATION SYSTEM COMPONENTS, LANDSCAPE PLANTING, AND ARCHITECTURAL FEATURES.
5. THIS SYSTEM SHALL BE INSTALLED USING ACCEPTED AND QUALITY INSTALLATION STANDARDS AS USE BY THE INDUSTRY. ALL MANUFACTURER'S SPECIFICATIONS WILL BE FOLLOWED.
6. MAINLINE SHALL BE BURIED A MINIMUM OF 18" UNDER COVER; LATERAL PIPING A MINIMUM OF 12" UNDER COVER. ALL BACKFILL SURROUNDING THE PIPE SHALL BE CLEANED OF ALL MATERIALS LARGER THAN 1" IN SIZE. BACKFILL SHALL BE ADDED IN 6" INCREMENTS AND MECHANICALLY TAMPED TO ELIMINATE SETTLEMENT.
7. FLUSH ALL LINES AND HEADS PRIOR TO INSTALLING NOZZLES. ADJUST NOZZLE SPRAY ARC AND RADIUS FOR OPTIMUM PERFORMANCE TO PREVENT OVERSPRAY ONTO PAVED SURFACES OR FACE OF BUILDINGS AS MUCH AS POSSIBLE TO FIT THE SITE CONDITIONS. THROTTLE FLOW CONTROL AT EACH VALVE FOR OPTIMUM OPERATING PRESSURE FOR EACH ZONE.
8. ALL SPRINKLER HEADS SHALL BE SET PERPENDICULAR TO FINISHED GRADE OF THE AREA TO BE IRRIGATED, UNLESS NOTED OTHERWISE.
9. WHEN VERTICAL OBSTRUCTIONS (POLES, SIGNS, TREES, HYDRANTS, ETC.) INTERFERE WITH THE SPRAY PATTERN OF THE HEADS SO AS TO PREVENT PROPER COVERAGE, THE CONTRACTOR SHALL FIELD-ADJUST THE SPRINKLER SYSTEM BY INSTALLING A QUARTER, THIRD, OR HALF-CIRCLE HEAD AT THE SIDES OF THE OBSTRUCTION SO AS TO PROVIDE PROPER COVERAGE. ALL ADJUSTMENTS SHALL BE MADE AT NO ADDITIONAL COST.
10. USE TEFLON TAPE ON ALL MALE PIPE THREADS ON PVC PIPE, SWING JOINTS, AND VALVE ASSEMBLIES.
11. INSTALL VALVE BOXES 18 INCHES FROM AND PERPENDICULAR TO WALKS, CURBS, BUILDING, OR LANDSCAPE FEATURES. AT MULTIPLE VALVE BOX GROUPS EACH BOX SHALL BE INSTALLED A MINIMUM OF 12 INCHES APART. IRRIGATION CONTRACTOR SHALL UTILIZE VALVE ID TAGS ON ALL REMOTE CONTROL VALVES.
12. ALL VALVES SHALL BE PLACED IN VALVE BOXES AS SHOWN IN THE APPROVED DETAILS, AND ALL ELECTRICAL CONNECTIONS SHALL BE SEALED WITH WATERPROOF CONNECTORS. ALL CONTROL WIRE SHALL BE BURIED AT A MINIMUM 2' AND A 12" LOOP IS TO BE PROVIDED AT EACH VALVE FOR SERVICING.
13. QUICK COUPLERS: INSTALL AT LEAST ONE QUICK COUPLER PER QUARTER BLOCK, PLUS AT LEAST ONE IN EACH MEDIAN.
14. 120-VOLT ELECTRICAL POWER AT THE CONTROLLER SHALL BE PROVIDED BY THE GENERAL CONTRACTOR. IT IS THE RESPONSIBILITY OF THE IRRIGATION CONTRACTOR TO MAKE THE FINAL HOOK-UP FROM THE POWER PROVIDED TO THE CONTROLLER. CONTROLLER, RAIN SENSOR, METER, TAP AND BACKFLOW LOCATIONS ARE AS SHOWN ON THE PLANS OR AS STATED IN THE DETAILS AND LEGEND. EXACT LOCATION OF CONTROLLER IS TO BE VERIFIED BY GENERAL CONTRACTOR AND/OR OWNER. ALL INFORMATION IS TO BE VERIFIED PRIOR TO ANY INSTALLATION OF THE PROJECT.
15. THE IRRIGATION CONTRACTOR IS RESPONSIBLE FOR ALL CLEAN-UP ASSOCIATED WITH HIS WORK.
16. IRRIGATION CONTRACTOR SHALL PROVIDE THE OWNER AND LANDSCAPE ARCHITECT WITH A REPRODUCIBLE AS-BUILT DRAWING WITHIN 21 DAYS UPON COMPLETION OF THE IRRIGATION INSTALLATION. CONTRACTOR SHALL ALSO PROVIDE THE OWNER: 1/2 WRENCH HEAD FOR DISASSEMBLING AND ADJUSTING EACH TYPE OF SPRINKLER HEAD AND VALVE AND 3 KEYS FOR EACH OF THE AUTOMATIC CONTROLLERS.
17. THERE SHALL BE NO SUBSTITUTIONS OR CHANGES TO THE APPROVED IRRIGATION DESIGN ALLOWED WITHOUT DIRECT, WRITTEN APPROVAL FROM THE IRRIGATION CONSULTANT OR THE LANDSCAPE ARCHITECT.
18. IRRIGATION CONTRACTOR SHALL PROVIDE THE FIRST WINTERIZATION BLOW-OUT. IN ADDITION, HE SHALL PROVIDE THE SPRING TURN-ON. ALL NECESSARY HEAD ADJUSTMENTS SHALL BE MADE AT THAT TIME, ALONG WITH REPLACEMENT OR REPAIR OF ANY WARRANTY ITEMS. THESE ITEMS SHALL BE INCLUDED IN THE IRRIGATION ALLOWANCE.
19. SLEEVING BY GENERAL CONTRACTOR.
20. INITIAL WATERING NOTES: ALL IRRIGATION ZONES ARE TO RUN EVERY SUPPLYING 1" OF WATER PER WEEK FOR 3-4 WEEKS. FOR GREATER EFFICIENCY, ALL SYSTEMS SHOULD BE OPERATED AT NIGHT OR DURING EARLY MORNING HOURS. DO NOT SET TIMERS TO WATER JUST PRIOR TO SUNDOWN. ONCE PLANTS ARE ESTABLISHED, WATERING CAN BE DECREASED TO 3-4 DAYS PER WEEK. IN WINTER MONTHS, WATERING CAN BE SPREAD OUT TO EVERY 10-14 DAYS.
21. PROVIDE RAIN SENSOR IN LOCATION(S) APPROVED BY OWNER AND/OR LANDSCAPE ARCHITECT.
22. TWO-WIRE SYSTEMS: PROVIDE SURGE PROTECTORS: EVERY 500 FT. OF CONTROL WIRE AND AT WIRE ENDS.
23. DRIP ZONES: PROVIDE DRIP SYSTEM OPERATION INDICATOR STEM RISING 6" FOR VISIBILITY WHEN SYSTEM IS CHARGED TO 20 PSI MIN.

## PLANTING SCHEDULE

| Trees | | | | | | |
|---|---|---|---|---|---|---|
| Quantity | Botanical Name | Common Name | Root | Scheduled Size | Spacing | Comments |
| 9 | Lagerstroemia indica x fauriei 'Tuskegee' | TUSKEGEE CRAPEMYRTLE | B&B | 2 1/2"-3" cal. | 10'0" s.o. | Matched mins 3 trunks min. 1 1/2" per trunk |
| 10 | Quercus nuttallii | NUTTALL OAK | B&B | 2 1/2"-3" cal. | 10'0" s.o. | |
| Shrubs | | | | | | |
| Quantity | Botanical Name | Common Name | Root | Scheduled Size | Spacing | Comments |
| 54 | Abelia x grandiflora 'Kaleidoscope' PPAF 10,989 | KALEIDOSCOPE ABELIA | Cont. | 3 gal. | 2'6" s.o. | |
| 36 | Cotoneaster franchetii | FRANCHETS COTONEASTER | Cont. | 18"-24" Spread | 3'0" s.o. | |
| 18 | Dryopteris erythrosora 'Brilliance' | AUTUMN FERN | Cont. | 12"-15" spread | 2'0" s.o. | |
| 18 | Hydrangea paniculata 'Limelight' | LIMELIGHT HYDRANGEA | Cont. | 18"-24" spread | 4'0" s.o. | |
| 12 | Hydrangea quercifolia | OAKLEAF HYDRANGEA | Cont. | 18"-24" spread | 4'0" s.o. | |
| 10 | Itea virginica 'Henry's Garnet' | VIRGINIA SWEETSPIRE | Cont. | 15"-18" spread | 4'0" s.o. | |
| 98 | Juniperus chinensis 'Nick's Compact' | NICK'S COMPACT JUNIPER | Cont. | 15-18" spread | 3'0" s.o. | |
| 18 | Viburnum carlesii 'Mrs Schiller's Delight' | MRS SCHILLERS VIBURNUM | Cont. | 15"-18" spread | 3'0" s.o. | |
| Groundcovers, Ornamental Grasses & Turfgrass | | | | | | |
| Quantity | Botanical Name | Common Name | Root | Scheduled Size | Spacing | Comments |
| 0 | Liriope muscari | ASPERGERA | Cont. | 1 gal. | 1'0" s.o. | |
| 40 | Muhlenbergia capillaris | MUHLICAN FEATHER GRASS | Cont. | 1 gal. | 2'0" s.o. | Full containers |
| | Cynodon dactylon | Bermuda Grass | Sod | | | |
| | Cynodon dactylon | Bermuda Grass | Seed | | | Seed all disturbed areas not otherwise noted |

## Homewood, AL - C-5 commercial zoning

Finds Urban Land Design

## Birmingham Luxury Motors, Homewood, AL

Article 3 - Tree Protection and Landscape

| | | | Required | Provided |
|---|---|---|---|---|
| Birmingham Tree Density (MTD) Req. | | | | |
| | Requirement | Average of 24 trees per acre (1100/1.31 ac/1, 250 acre) | 7 Trees | 34 |
| | | Perimeter trees to count toward MTD total | | |
| Buffer Yard Requirements: | | | | |
| | Requirement | Existing trees to count toward buffer | | |
| Parking Lot Landscaping Requirements: | | | | |
| | Requirement | Minimum 50% of the linear feet of any side of a building facing public right of way (150 linear feet) | | |
| | | Planting area must be a minimum of 3 feet in width (450 square feet) | | |
| | Requirement | 1 shrub required for every 15 square feet of total required planted area (450 square feet) | 180 | 87 |
| Perimeter VA Landscape Area (PVA) Requirements: | | | | |
| | Requirement | 1 tree per 30 linear feet of perimeter, excluding drive | | |
| | | 10 shrubs per 100 linear feet | | |
| | | Vulcan Rd (Dash 1467 feet) | | |
| | | Trees | 50 | 14 |
| | | Shrubs | 147 | 241 |
| | | Service Road (Dashed) | | |
| | | Trees | 0 | 0 |
| | | Shrubs | 0 | 0 |
| | | Service Road (Dashed) | | |
| | | Trees | 0 | 0 |
| | | Shrubs | 0 | 0 |
| Interior Island Landscape Area Requirements: | | | | |
| | Requirement | Parking island required every 10 parking spaces | 8 | 0 |
| | Requirement | Parking islands require 1 shrub, tree | 8 | 8 |






Renta
URBAN LAND DESIGN
205.533.3039
PO Box 360 / Birmingham, AL 35201
renta@dbi.com

STATE OF ALABAMA
ALBERT LEE RENTA
REGISTERED
815
LANDSCAPE ARCHITECT
FOR PERMIT

BIRMINGHAM LUXURY MOTORS
190 VULCAN ROAD
BIRMINGHAM, AL 35209

| REVISIONS | | |
|---|---|---|
| NO | DATE | DESCRIPTION |

COMPLIANCE

| | |
|---|---|
| JOB NO: | FIFT-2201 |
| DATE: | 09/20/2022 |
| DRAWN BY: | AW |
| CHECKED BY: | ALR |
| SHEET NUMBER: | L1.0 |

CITY OF HOMEWOOD
ENGINEERING & ZONING DEPARTMENT

2850 - 19th Street South - 4th Floor
Homewood, Alabama 35209
Phone 205-332-6800 | Fax 205-332-6955

Patrick McClusky, Mayor Cale Smith, PE, Director

September 30, 2022

Hussein Mawani
3501 4th Avenue South
Birmingham, Alabama 35222

**Dear Owner/Applicant and/or Adjacent Property Owners:**

The owner has petitioned the Homewood Board of Zoning Adjustments for a modification to the Homewood Zoning Ordinance for the property located at:

***SV-22-10-05, 190 Vulcan Road, Parcel ID No.: 29 00 14 3 004 004.001***
***Applicant: Caprine Engineering / Property Owner: Hussein Mawani***

a. *A request for a variance to Article VII. Off-Street Parking and Loading Requirements, Sec. M., Required Parking Spaces for Individual Uses, to reduce the number of required parking spaces for an automobile dealership in the C-5 General Business Zoning District from 160 to 106, for a total reduction of 54 spaces.*
b. *A request for a variance to Article XI Tree Protection and Landscape, Sec. I, Other Landscaping Requirements, 3. Interior Island Landscape Area Requirements, to eliminate landscape islands between every 10 parking spaces with the required number of trees being distributed throughout the site.*
c. *A request for a variance to Article IV, District Uses, Sec. Q, C-5 General Business District, (3)(b), to permit the outside storage of vehicles for sale in parking spaces currently existing within the building setback.*

The Board of Zoning and Adjustments will consider this petition during a meeting to be held at 6:00 p.m. on Thursday, October 6, 2022, in the Council Chambers (2nd Floor) at Homewood City Hall, 2850 19th Street South. If you prefer not to attend the in-person meeting at City Hall, you may join on-line utilizing the attached Zoom instructions **(SEE INSTRUCTIONS ON THE REVERSE SIDE OF THIS NOTICE)**

This letter will serve as notice to the parties in interest and to all adjacent property owners. Any protest to the above referenced petition will be heard at this time. The applicant and/or owner must participate in the meeting to present their case.

Sincerely,

Sherri Williams
Zoning Supervisor

cc: Caprine Engineering

You may contact our office for further information or questions at (205) 332-6800 OR visit between 7:30 a.m. and 4:30 p.m. Mon-Fri to review any files or drawings pertaining to this application

**Instructions:** Although the proceedings of the meeting may be viewed on-line, please note that anyone wishing to participate in a discussion of the scheduled cases must attend the meeting in Homewood City Hall in person. If you choose to view the meeting via Zoom, please follow the instructions below:

1st Option: Join on-line at www.zoom.us/join
Meeting #: 883 5766 5513
Passcode: 514257

2nd Option: Join through the app if you already have the Zoom app downloaded:
Meeting #: 883 5766 5513
Passcode: 514257

3rd Option: Dial in by phone: 312-626-6799

**Comments in support or opposition to cases on the agenda, may be submitted to the Secretary to the Board of Zoning Adjustments at fred.goodwin@homewoodal.org. Comments should be submitted no later than 24-hours prior to the meeting and will be provided to the board's members for their consideration. Please reference the case number or address in your comments.**

**A copy of the file on this case will be available for review on the City of Homewood's website (cityofhomewood.com) under "Upcoming Meetings/BZA" approximately one week before the scheduled public hearing.**

**The scheduled public hearing will be preceded by a brief work session for Board Members beginning at 5:30 p.m. in the City Council's Committee Workroom located on the 2nd floor behind the Council Chambers.**

COMPLETE AND SUBMIT
PRIOR TO THE DEADLINE DATE

City of Homewood
Board of Zoning Adjustments
Request for Variance or Appeal

☒ **VARIANCE** ☐ **APPEAL**

**ADDRESS OF PROPERTY:** **320 Oxmoor Rd, Homewood, AL 35209**

**BZA CASE # (assigned by city staff):** SV # 22-10-06

**APPLICANT INFORMATION**

Name of Applicant (s): **Homewood Hardware, LLC Jason Russell**

Address of Applicant(s): **415 Caldwell Dr**

**Warrior** (City) **AL** (State) **35180** (Zip)

Telephone Number(s) of Applicant(s): **O: 205-647-3202 x203. M: 205-994-1411**

Email: **Jason@russellpig.com**

Property Interest of Applicant(s): **Tennant**
(i.e., owner, contract purchaser, agent, architect, contractor, developer, etc.)

**OWNER INFORMATION** – ***If different from Applicant***

Name of Owner(s): **High Cotton Palisades, LLC, High Cotton Shoals, LLC & Pharo Palisades I, LLC**

Address of Owner(s) (**ONLY** if address is different from property address) otherwise put same:
**Attn: Will Akin, PO Box 430113, Birmingham, AL 35243**
City State Zip

Email: **will@cgpre.com**

Telephone Number(s) of Owner(s): **205-401-5894**

**DESCRIPTION, USE AND ZONING OF PROPERTY** (Parcel ID & present zoning can be filled out at time of application submittal)

PARCEL IDENTIFICATION NUMBER: 29-00-14-4-004-006.000

PRESENT USE: _____ vacant _____ residence

_____ commercial (describe): _____

_____ other (describe): _____

PRESENT ZONING DISTRICT (City Zoning Map): GURD

COMPLETE AND SUBMIT
PRIOR TO THE DEADLINE DATE

City of Homewood
Board of Zoning Adjustments
Request for Variance or Appeal

**PLEASE STATE HARDSHIP** – for guidance, see "*What is a Variance*" on page 1 of instructions page:

**To create a semi dry storage are for mulch, dirt, fertilizers, soil amendments and quickcrete and also to create a dry area to unload delivery trucks minimizing traffic and parking disruptions for ourselves and other tenants in the center and adjacent buisnesses.**

**Submitted plans would fence the rear of the building to the curb with privacy screening and construct a metal cover for the area matching the style of front awnings.**

**PURPOSE OF VARIANCE**

A variance is requested on the property described below in conformity with the powers vested in the Board to permit:

___ the construction of an addition to a residence,
___ the construction of residence,
___ the construction of an addition to a commercial structure,
X__ the construction of a commercial structure,
___ other (describe):_____

COMPLETE AND SUBMIT
PRIOR TO THE DEADLINE DATE

City of Homewood
Board of Zoning Adjustments
Request for Variance or Appeal

## INDICATE THE FOLLOWING

Applicant must provide a survey to verify:

| Setback information | *Required by zoning regulations | Setback dimensions currently existing | Setback dimensions after proposed construction | Setback Variance Requested |
|---|---|---|---|---|
| Front Setback<br>Street Name OXMOOR ROAD | 35' | 98.7' | 98.7' | |
| Front Setback – Corner lot<br>Street Name COLUMBIANA RD | 9' 35 | VARIES (10' TO 26') | ~~3'~~ | ~~35'~~ 4' 32' |
| Right Bldg. Setback | NOT APPLICABLE | NOT APPLICABLE | NOT APPLICABLE | |
| Left Bldg. Setback | 0' | 0' | 0' | |
| Rear Bldg. Setback | 20' | 0' | 0' | |
| Accessory Structure Setback: side/rear | / | / | / | / |
| **Property dimensions and structure information** | **As required** | **Currently existing** | **Proposed** | **Variance Requested** |
| Lot Area (sq. ft./acres) | 10,000' MIN. | 26,571.5 SF | 26,571.5 SF | |
| Lot Width | | 130.17' | 130.17' | |
| Parking Spaces | NOT APPLICABLE | NOT APPLICABLE | NOT APPLICABLE | |
| Height of Structure | 45' | 17' | 17' | |
| Lot Coverage<br>sq. ft. of structures ÷ lot sq. ft. | | .38 | .43 | |

*Required setback information is available in the Zoning Ordinance which is available on the City of Homewood website. If you need to find out how your property is zoned, please contact the zoning department by calling 332-6828 or 332-6854 or by clicking on the following link to email: Zoning Information.

*The undersigned hereby grants permission for a sign, advertising the BZA hearing date, time and place to be posted on my property. I (we) attach $100.00 application fee and promise to pay any additional costs billed separately for extra items related to this variance request.*

*I (we) certify that all of the above statements and the statements contained in any paper of plans submitted herewith are true to the best of my (our) knowledge and belief.*

Redacted by City Staff

Signature of Applicant/Agent — Date: 9/7/2022

DocuSigned by:
Redacted by City Staff
Signature of Owner — Date: 9/13/2022

Signature of Owner — Date:

# City of Homewood BZA Case Map

**320 Oxmoor Rd.**

**SV 22-10-06**

**Aerial Photo**

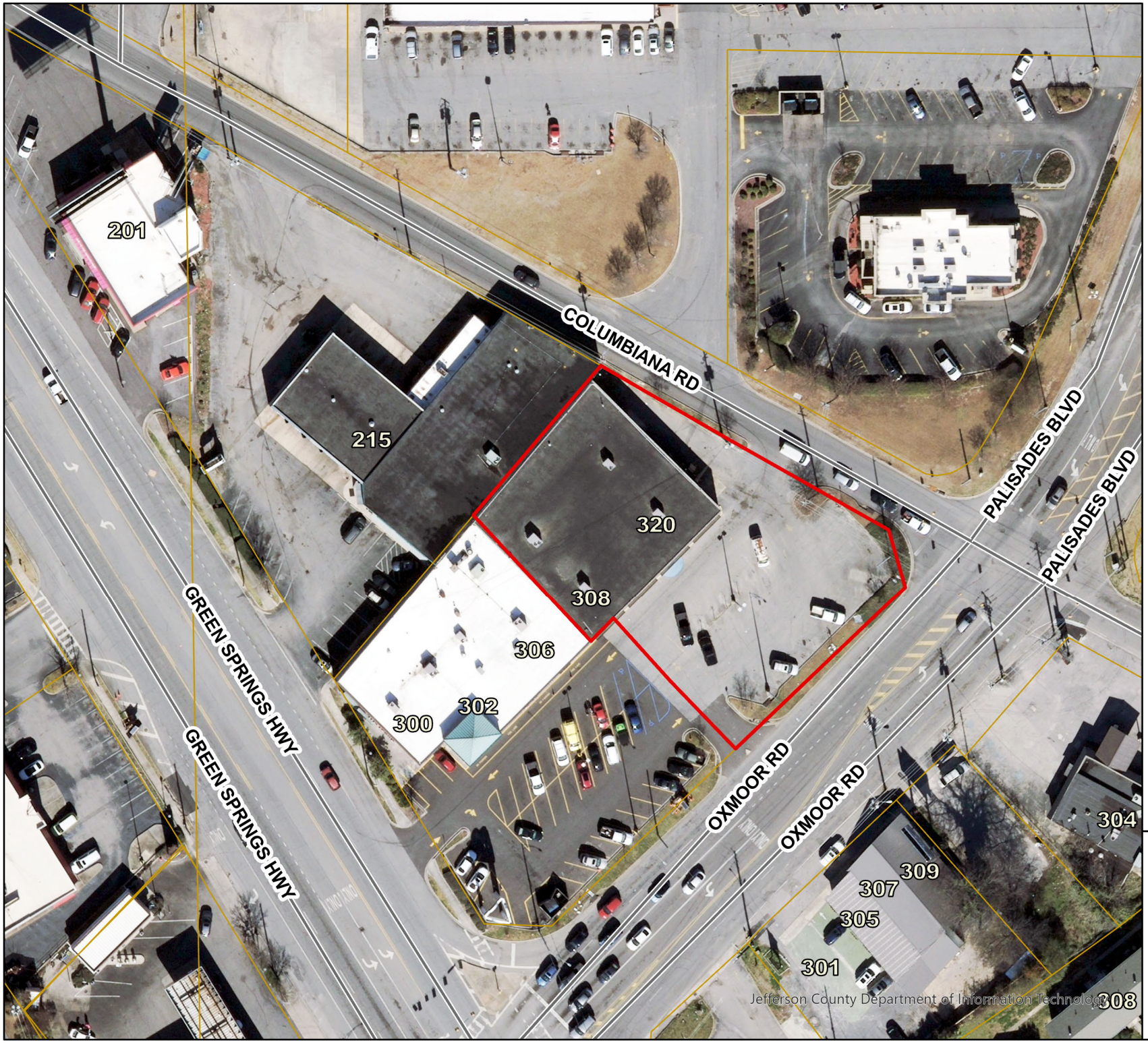


Subject Property

Parcels

N

0 25 50 100 Feet

THE INFORMATION ON THIS DRAWING WAS COMPILED FROM SERVERAL SOURCES AND SHOULD ONLY BE USED FOR GEREAL INFORMATION AND ORENTATION. THIS DRAWING IS THE PROPERTY OF THE CITY OF HOMEWOOD AND ITS USE BY ANYONE FOR ANY PURPOSE OTHER THAN THAT SPECIFICALLY AUTHORIZED BY THE CITY OF HOMEWOOD IS PROHIBITED.

ZONING IS SUBJECT TO CHANGE. PLEASE CALL ZONING OFFICE TO CONFIRM ZONING. 332-6828


FOLEASED SE
10,000 +/- SF AVAILABLE
AUDREY AKIN BONE
205.401.5894


ONLY PAY IF WE WIN
SHARPCARPET


SHARPCARPET
ONLY PAY IF WE WIN

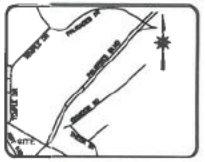

VICINITY MAP
not to scale

| LEGEND | |
|---|---|
| ⊕ | IRON PIN FOUND |
| ⊕ | IRON PIN SET (5/8" REBAR w/CAP) |
| ⊠ | CONCRETE MONUMENT FOUND |
| + | CROSS FOUND |
| ○ | CALCULATED POINT |
| | UTILITY POLE w/GUY |
| —OHP— | OVERHEAD POWER LINE |
| —OHT— | OVERHEAD TELEPHONE LINE |
| —SS— | SANITARY SEWER LINE |
| —U— | UNDERGROUND WATER LINE |
| —E— | UNDERGROUND GAS LINE |
| —C— | UNDERGROUND COMMUNICATION LINE |
| | RIGHT OF WAY |
| | WATER METER |
| | WATER VALVE |
| | ASPHALT SURFACE |
| | CONCRETE SURFACE |
| | STORM SEWER MANHOLE |
| | SANITARY SEWER MANHOLE |
| | TELEPHONE PEDESTAL |
| | SANITARY SEWER CLEANOUT |
| | ELECTRIC BOX |
| | FIRE HYDRANT |
| | TELEPHONE MANHOLE |
| | PARKING COUNT |

| ABBREVIATIONS | | | |
|---|---|---|---|
| P.O.C. | POINT OF COMMENCEMENT | TYP. | TYPICAL |
| P.O.B. | POINT OF BEGINNING | BOW | BACK OF WALK |
| INV. | INVERT | BOC | BACK OF CURB |
| PVC | POLYVINYL | EL. | ELEVATION |
| (R) | RECORD | | |
| (M) | MAP BOOK 133, PAGE 80 | | |

| PARKING COUNT |
|---|
| REGULAR: 27 |
| HANDICAP: 1 |
| OVERALL: 28 |

| ENCROACHMENTS |
|---|
| 1. CURB ALONG PALISADES BLVD. |

STREET VIEW FROM PALISADES BOULEVARD

AERIAL VIEW

SITE PHOTOS
IMAGE TAKEN FROM GOOGLE EARTH PRO, © 2011 GOOGLE, © 2011 EUROPA TECHNOLOGIES, © 2011 NAVTEQ

SCALE IN FEET

## SURVEY & TITLE LEGAL DESCRIPTION

Lot 2, according to the Survey of Palisades West Gate, as recorded in map Book 133, Page 80, in the Probate Office of Jefferson County, Alabama, Birmingham Division.

Together with rights in and to a non-exclusive easement for vehicular and pedestrian ingress and egress and for parking over, along and across and appurtenant as recorded in Deed 3874, page 255 in the Probate Office of Jefferson County, Alabama.

## TITLE COMMITMENT

Surveyor's comments on exceptions listed in Schedule B for the ALTA Owners Policy and ALTA Loan Policy of Title Insurance (File No. 4822B-2C) dated November 30, 2020 by Land Title Company of Alabama as agents for Chicago Title Insurance Company:

1. Any defect, lien, encumbrance, adverse claim, or other matter that appears for the first time in the Public Records or is created, attaches, or is disclosed between the Commitment Date and the date on which all of the Schedule B, Part I—Requirements are met. Not addressed by surveyor.
2. All taxes for the year 2021 and subsequent years, not yet due and payable. Not addressed by surveyor.
3. Any encroachment, encumbrance, violation, variation, or adverse circumstance affecting the title that would be disclosed by an accurate and complete survey of the land.
4. Rights or claims of parties in possession not shown by the public records. Not addressed by surveyor.
5. Easements, or claims of easements, not shown by the public records. (See note #1).
6. Any lien, or right to a lien, for services, labor, or material heretofore or hereafter furnished, imposed by law and not shown by the public records. Not addressed by surveyor.
7. Taxes or special assessments which are not shown as existing liens by the public records. Not addressed by surveyor.
8. Such state of facts as shown on recent subdivision plat recorded in Map Book 133, page 80 Jefferson County Records. Shown hereon.
9. Any prior reservation or conveyance, together with release of damages of minerals of every kind and character, including, but not limited to, oil, gas, sand and gravel in, on and under subject property. Not addressed by surveyor.
10. Mineralogy Joined.
11. Right of way to Jefferson County, Alabama, recorded in Volume 3884, page 391, in the Probate Office of Jefferson County, Alabama. Does not affect subject property.
12. Easement to Birmingham Gas Company, as recorded in Volume 3886, page 333 and Volume 4081, page 19, in the Probate Office of Jefferson County, Alabama. Instruments are vague and unable to plot. May or may not affect subject property.
13. Easement to Alabama Power Company recorded in Volume 3887, page 365, in the Probate Office of Jefferson County, Alabama. Instrument is blanket in nature and includes subject property.
14. Easement to South Central Bell as recorded in Deed 848, page 489, Deed 848, page 490, Deed 848, page 497 and Deed 843, page 385, in the Probate Office of Jefferson County, Alabama. Instruments are vague and unable to plot. May or may not affect subject property.
15. Easement to Alabama Power Company recorded in Deed 1108, page 374, in the Probate Office of Jefferson County, Alabama. Does not affect subject property.
16. Restrictions, Covenants, Agreement and Limitations appearing of record in Volume 3874, page 322, in the Probate Office of Jefferson County, Alabama, but omitting any covenant or restriction based on race, color, religion, sex, handicap, familial status, or national origin, instrument includes subject property.
17. Easement for sanitary sewer recorded in Deed 3874, page 277 in the Probate Office of Jefferson County, Alabama. Does not affect subject property.
18. Easement to Alabama Power Company recorded in Volume 3887, page 376, in the Probate Office of Jefferson County, Alabama. Instrument is blanket in nature and includes subject property.
19. Title to all minerals within and underlying the premises, together with all mining rights and other rights, privileges and immunities relating thereto, as recorded in Volume 3886, page 376, in the Probate Office of Jefferson County, Alabama. Instrument is blanket in nature and includes subject property.
20. Rights of others in and to the use of a non-exclusive easement for vehicular and pedestrian ingress/egress and for parking, Party Wall Easement and Utility Easement, Restrictions and Limitations recorded in Deed 3874, page 256 in the Probate Office of Jefferson County, Alabama. Instrument includes subject property.
21. Mortgage(s) Joined.
22. Rights of tenants in possession.
23. Any claim that the Title is subject to a trust or lien, created under The Perishable Agricultural Compensation Act (7 U.S.C. Section 499a, et seq.) or the Packer and Stockyards Act (7 U.S.C. Section 181 et. seq.) or under similar state laws.

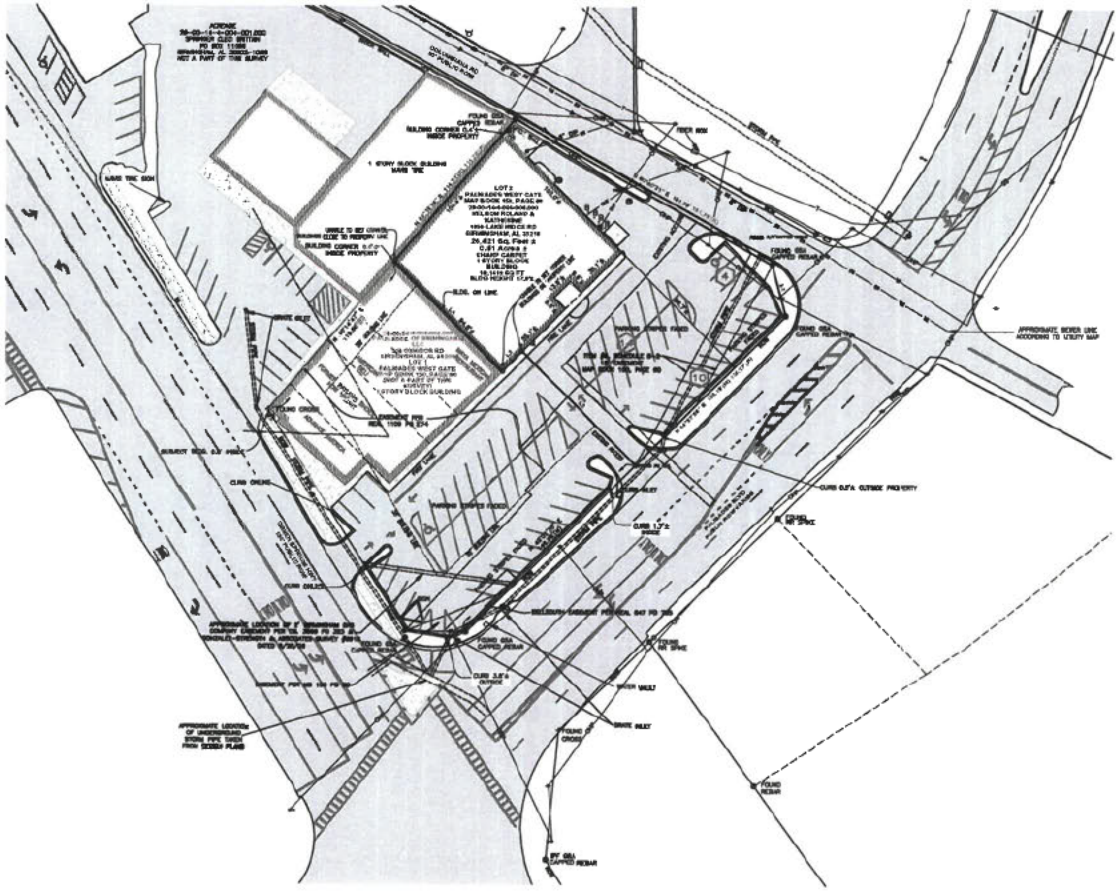


| NOTES |
|---|
| 1. All observable and rights of way of which the surveyor has knowledge are shown hereon; others may exist of which the surveyor has no knowledge and of which there is no observable evidence. |
| 2. No affected roads by Surveyor to locate underground utilities. All utilities shown hereon were drawn based on field evidence only which should be considered approximate and should be marked on the ground by the utility companies prior to construction. The telephone numbers for the Alabama One Location Center (811Call) are 205-444-4444 (Birmingham area) and (800) 292-8525 (elsewhere). |
| 3. No attempt has been made and no guarantee are hereby given as to the location of sub-surface foundations. |
| 4. According to the Flood Insurance Rate Map (FIRM) for Jefferson County, Alabama (community-panel number 01073C0351H, dated September 3, 2010), all of the subject property lies within Zone X, defined as "Areas determined to be outside the 0.2% annual chance floodplain." |
| 5. North arrow and bearings shown hereon are based on Transverse Mercator Projection - Alabama West Zone -- NAD 83 adjusted 2011, Using Global Positioning System (GPS) and derived by RTK observation. Using the Alabama Department of Transportation CORS Network (SAIC). |
| 6. At the time of the field survey there was no observable evidence of earthwork, new building work, building addition or construction, changes in street right of way lines, street or sidewalk repair or construction, nor of the site as a solid waste dump, dump, or sanitary landfill. |
| 7. At the time of the field survey there was no observable evidence of earthwork, new building work, building addition or construction, changes in street right of way lines, street or sidewalk repair or construction, nor of the site as a solid waste dump, dump, or sanitary landfill. |
| 8. There was no observable evidence or evidence provided to the surveyor of potential wetlands on the subject property. |
| 9. The property surveyed has direct vehicular and pedestrian access to Palisades Blvd, Columbiana Road and Green Springs Highway, all public right of ways. |
| 10. The property surveyed and shown hereon is the same property as described in title commitment number 4822B-2C, dated November 30, 2020, and prepared by Land Title Company of Alabama as agents for Chicago Title Insurance Company. |
| 11. The boundary lines of the subject property are contiguous with the boundary lines of all adjoining streets, highways, rights of ways and waterways, public or private, as described in their most recent respective legal descriptions of record. |
| 12. The boundary line dimensions as shown on this survey may form a mathematically closed figure within 0.5 feet. |
| 13. No encroachments from improvements located on the property onto any adjacent properties and/or easements or right-of-way were observed at the time of the survey, nor were any properties from improvements located on any adjacent properties and/or easements or right-of-way onto the property observed at the time of the survey unless shown hereon. |

Certified to: High Cotton Palisades, LLC; High Cotton Woods, LLC; Pharo Palisades I, LLC; Sandsted Bank; Land Title Company of Alabama and Chicago Title Insurance Company

This is to certify that this map or plat and the survey on which it is based were made in accordance with the 2016 Minimum Standard Detail Requirements for ALTA/NSPS Land Title Surveys," jointly established and adopted by ALTA, and NSPS and includes Items 1-4,6-7(a,b),7(c),8,9,13,14,16-18 of Table A thereof. The field work was completed on 12-2-2020.

Date: 12-22-2020

Derek S. Goodman, Registered No. 30806
dsgoodman@gonzalez-strength.com

ALL PARTS OF THE SURVEY AND DRAWING HAVE BEEN COMPLETED IN ACCORDANCE WITH THE CURRENT REQUIREMENTS OF THE STANDARD OF PRACTICE FOR SURVEYING IN THE STATE OF ALABAMA.

811 Know what's below. Call before you dig. Dial 811 Or Call 888-292-7711

| REVISIONS | |
|---|---|
| NO. | DESCRIPTION |
| | |

QUARTER - SECTION
EAST CHG PALP
TOWNSHIP 18 SOUTH
SECTION 14
RANGE 4 WEST

TITLE
ALTA/NSPS LAND TITLE SURVEY
PALISADES WEST GATE
320 COLUMBIANA ROAD
BIRMINGHAM, AL 35209
PCN
HIGH COTTON PALISADES, LLC

| | |
|---|---|
| DATE: 12-2-20 | SCALE: 1"=20' |
| DRAWN BY: | CERTIFIED SURVEY DATE: |
| CHECKED BY: | COORDINATE FILE: |
| FIELD BOOK/PAGE: | DWG. NAME: |

GONZALEZ - STRENGTH & ASSOCIATES, INC.
CIVIL ENGINEERS - LAND SURVEYORS - TRANSPORTATION
1550 WOODS OF RIVERCHASE DRIVE, SUITE 206
HOOVER, ALABAMA 35244
PHONE: (205) 823-2166
FAX: (205) 823-2033
www.Gonzalez-Strength.com
© Copyright 2011

DWG. NO.
R1-60
PROJECT
20-0583

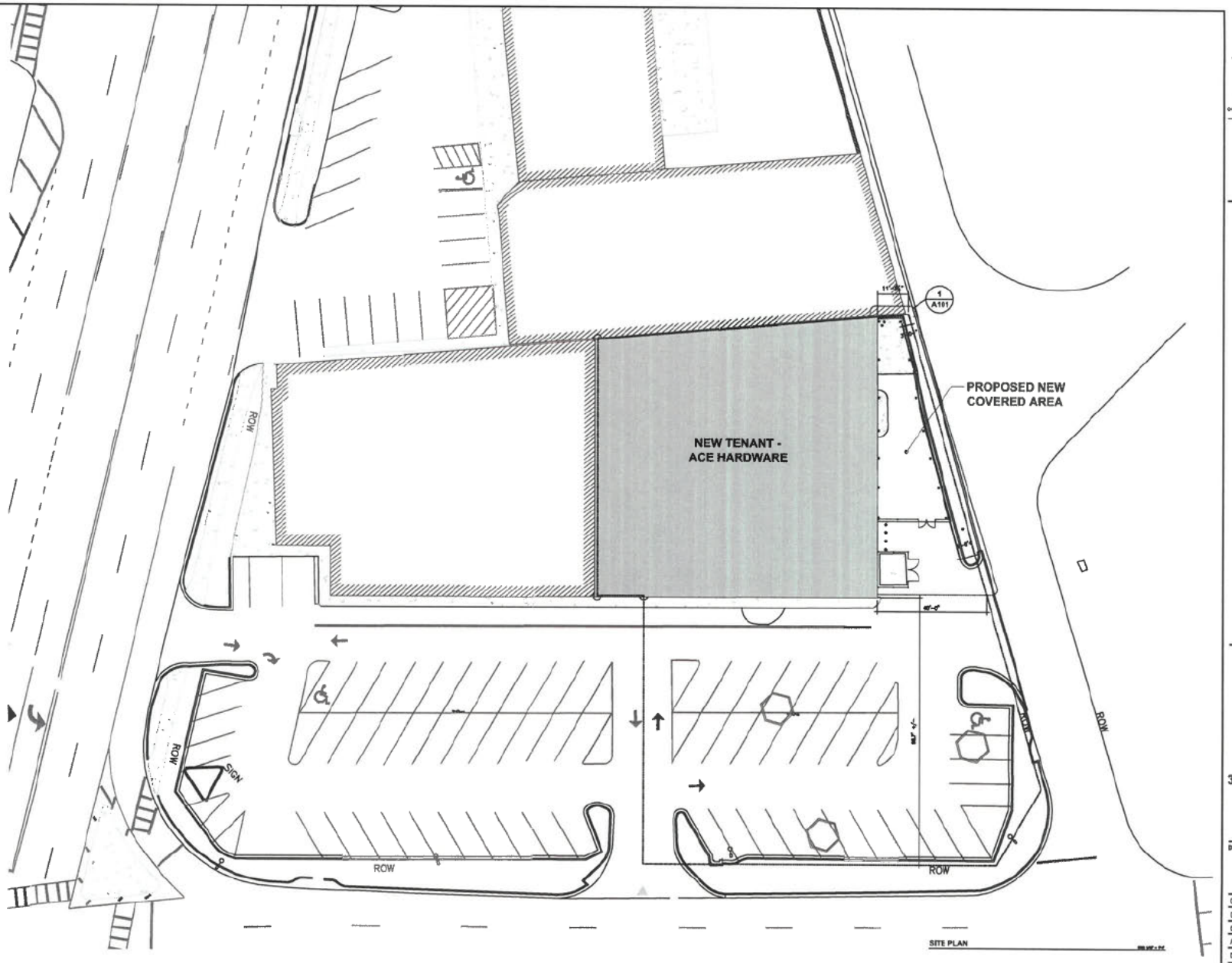


THOMPSON ARCHITECTURE
INCORPORATED
2913 Colonial Road Birmingham, AL 35223
Telephone 205 414 1272
e-mail: rthompson@thompsonarchitecture.com

ISSUED FOR
REVIEW:

09-06-22

SITE
IMPROVEMENTS
FOR

# ACE HARDWARE

320 OXMOOR ROAD
HOMEWOOD, AL
35209

DRAWING NAME

SITE PLAN

| | |
|---|---|
| COM | ACH--22023 |
| DRAWN BY | EC |
| CHECKED | RT |
| APPROVED | RT |
| DATE | 09--29--22 |

A100

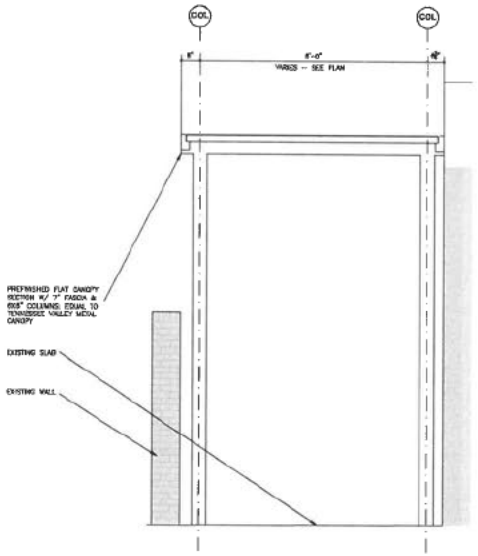


3 A101 **SECTION @ SITE WALL** SCALE: 1/2" = 1'-0"

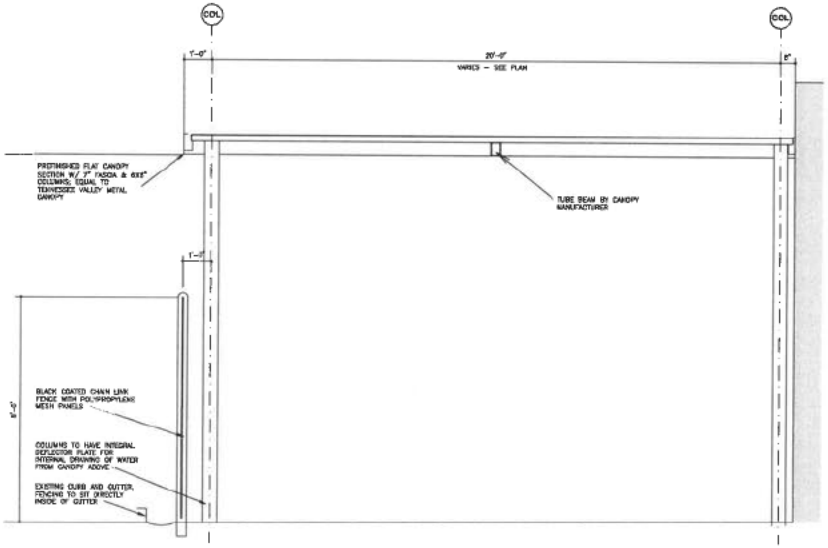


2 A101 **SECTION @ FENCE** SCALE: 1/2" = 1'-0"

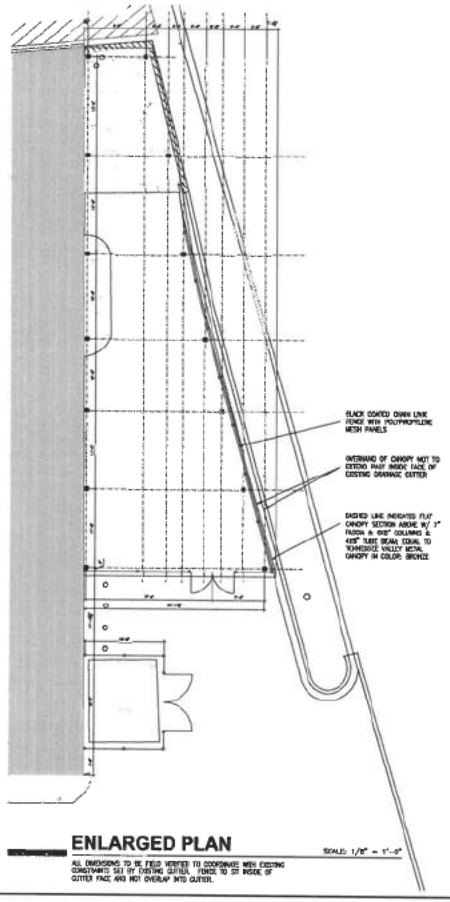


**ENLARGED PLAN** SCALE: 1/8" = 1'-0"

ALL DIMENSIONS TO BE FIELD VERIFIED TO COORDINATE WITH EXISTING CONDITIONS SET BY EXISTING GUTTER. FENCE TO SIT INSIDE OF GUTTER FACE AND NOT OVERLAP INTO GUTTER.

THOMPSONARCHITECTURE
INCORPORATED
2513 Cahaba Road Birmingham, AL 35223
Telephone 205.414.1272
e-mail: rthompson@thompsonarchitecture.com

ISSUED FOR REVIEW:

09-06-22

SITE IMPROVEMENTS FOR

# ACE HARDWARE

320 OXMOOR ROAD
HOMEWOOD, AL
35209

DRAWING NAME

ENLARGED SITE DETAILS

| | |
|---|---|
| COM | ACH-22023 |
| DRAWN BY | EC |
| CHECKED | RT |
| APPROVED | RT |
| DATE | 08-29-22 |

A101

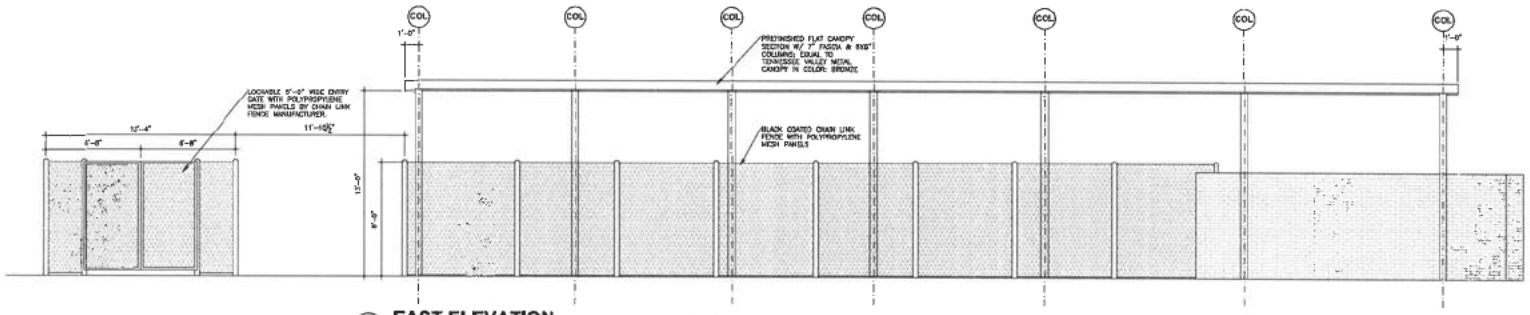


2 A102 **EAST ELEVATION** SCALE: 1/4" = 1'-0"

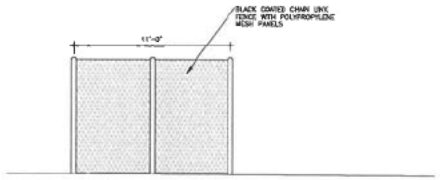


3 A102 **SOUTH ELEVATION** SCALE: 1/4" = 1'-0"
DUMPSTER ENCLOSURE

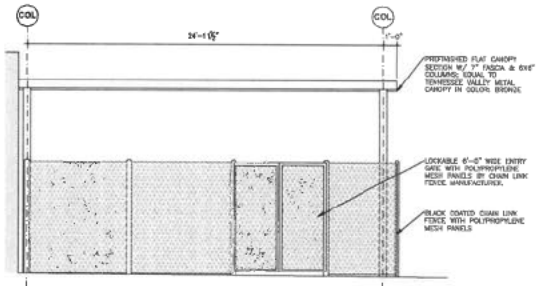


1 A102 **SOUTH ELEVATION** SCALE: 1/4" = 1'-0"


THOMPSONARCHITECTURE INCORPORATED

2913 Cahaba Road Birmingham, AL 35223
Telephone 205 414 1272
e-mail: dthompson@thompsonarchitecture.com


**ISSUED FOR REVIEW:**

**09-06-22**

**SITE IMPROVEMENTS FOR**

# ACE HARDWARE

**320 OXMOOR ROAD HOMEWOOD, AL 35209**

DRAWING NAME

**ENLARGED SITE ELEVATIONS**

| | |
|---|---|
| COM | ACH-22023 |
| DRAWN BY | EC |
| CHECKED | RT |
| APPROVED | RT |
| DATE | 08-29-22 |

**A102**

CITY OF HOMEWOOD
ENGINEERING & ZONING DEPARTMENT

2850 - 19th Street South - 4th Floor
Homewood, Alabama 35209
Phone 205-332-6800 | Fax 205-332-6955

Patrick McClusky, Mayor Cale Smith, PE, Director

September 30, 2022

High Cotton Palisades, LLC
High Cotton Shoals, LLC & Pharo Palisades I, LLC
Attention: Will Akin
Post Office Box 430113
Birmingham, Alabama 35243

**Dear Owner/Applicant and/or Adjacent Property Owners:**

The owner has petitioned the Homewood Board of Zoning Adjustments for a modification to the Homewood Zoning Ordinance for the property located at:

***SV-22-10-06, 320 Oxmoor Road, Parcel ID No.: 29 00 14 4 004 006.000***
***Applicant: Homewood Hardware, LLC., Jason Russell***
***Property Owners: High Cotton Palisades, LLC, High Cotton Shoals, LLC & Pharo Palisades I, LLC***

*A request for a variance to Article V. District Development Criteria, Sec. A. Quantitative Development Criteria, Table 1, to reduce the setback along the secondary front from 35-feet to 3-feet for a total reduction of 32-feet, to allow the construction of a covered, semi-dry outdoor storage area*

The Board of Zoning and Adjustments will consider this petition during a meeting to be held at 6:00 p.m. on Thursday, October 6, 2022, in the Council Chambers (2nd Floor) at Homewood City Hall, 2850 19th Street South. If you prefer not to attend the in-person meeting at City Hall, you may join on-line utilizing the attached Zoom instructions **(SEE INSTRUCTIONS ON THE REVERSE SIDE OF THIS NOTICE)**

This letter will serve as notice to the parties in interest and to all adjacent property owners. Any protest to the above referenced petition will be heard at this time. The applicant and/or owner must participate in the meeting to present their case.

Sincerely,

Sherri Williams
Zoning Supervisor

cc: Homewood Hardware, LLC – Jason Russell

You may contact our office for further information or questions at (205) 332-6800 OR visit between 7:30 a.m. and 4:30 p.m. Mon-Fri to review any files or drawings pertaining to this application

**Instructions:** Although the proceedings of the meeting may be viewed on-line, please note that anyone wishing to participate in a discussion of the scheduled cases must attend the meeting in Homewood City Hall in person. If you choose to view the meeting via Zoom, please follow the instructions below:

1st Option: Join on-line at www.zoom.us/join
Meeting #: 883 5766 5513
Passcode: 514257

2nd Option: Join through the app if you already have the Zoom app downloaded:
Meeting #: 883 5766 5513
Passcode: 514257

3rd Option: Dial in by phone: 312-626-6799

**Comments in support or opposition to cases on the agenda, may be submitted to the Secretary to the Board of Zoning Adjustments at fred.goodwin@homewoodal.org. Comments should be submitted no later than 24-hours prior to the meeting and will be provided to the board's members for their consideration. Please reference the case number or address in your comments.**

**A copy of the file on this case will be available for review on the City of Homewood's website (cityofhomewood.com) under "Upcoming Meetings/BZA" approximately one week before the scheduled public hearing.**

**The scheduled public hearing will be preceded by a brief work session for Board Members beginning at 5:30 p.m. in the City Council's Committee Workroom located on the 2nd floor behind the Council Chambers.**

CAPture Citizen Access

JEFFERSON COUNTY, ALABAMA. CITIZEN ACCESS PORTAL

WELCOME PROPERTY TAX BOE PERSONAL PROPERTY REDEMPTION

- Search
- Pay Tax
- Assessment
- Forms

| | |
|---|---|
| **PARCEL #:** | **29 00 14 4 004 006.000** |
| **OWNER:** | NELSON ROLAND & KATHERINE |
| **ADDRESS:** | 1859 LAKE RIDGE RD BIRMINGHAM AL 35216 |
| **LOCATION:** | 320 OXMOOR RD HOMEWOOD AL 35209 |

| | | |
|---|---|---|
| **[ 500-D+ ]** | Baths: **1.0** | H/C Sqft: **9,574** |
| **50-015.0** | Bed Rooms: **0** | Land Sch: **S142** |
| Land: **198,100** | Imp: **708,900** | Total: **907,000** |
| Acres: **0.000** | Sales Info: **$0** | |

<< Prev Next >> [ 1 / 1 Records ] Processing...

Tax Year : 2022

SUMMARY LAND BUILDINGS SALES PHOTOGRAPHS MAPS

QUICK LINKS
- BOE
- Property Tax
- Assessment
- Collection
- Millage Rate
- Contact Us
- County Site
- ** News **

**Disclaimer:** Information and data provided by any section of this website are being provided "as-is" without warranty of any kind. The information and data may be subject to errors and omissions.

Jefferson County
716 Richard Arrington Jr Blvd N
Birmingham, AL 35203
(205) 325-5500

## SUMMARY

### ASSESSMENT

| | | | |
|---|---|---|---|
| PROPERTY CLASS: | 2 | OVER 65 CODE: | |
| EXEMPT CODE: | | DISABILITY CODE: | |
| MUN CODE: | 12 HOMEWOOD | HS YEAR: | 0 |
| SCHOOL DIST: | | EXM OVERRIDE AMT: | $0.00 |
| OVR ASD VALUE: | $0.00 | TOTAL MILLAGE: | 75 |
| CLASS USE: | | | |
| FOREST ACRES: | 0 | TAX SALE: | |
| PREV YEAR VALUE: | $907,000.00 | BOE VALUE: | 0 |

### VALUE

| | | |
|---|---|---|
| LAND VALUE 10% | | $0 |
| LAND VALUE 20% | | $198,110 |
| CURRENT USE VALUE | [DEACTIVATED] | $0 |
| CLASS 2 | | |
| PAVING ASPHALT | 34PASP1 | $22,600 |
| BLDG 001 | 500 | $686,300 |
| CLASS 3 | | |
| TOTAL MARKET VALUE **[APPR. VALUE: $907,000]**: | | $907,010 |

Assesment Override:

MARKET VALUE:
CU VALUE:
PENALTY:
ASSESSED VALUE:

### TAX INFO

| | CLASS | MUNCODE | ASSD. VALUE | TAX | EXEMPTION | TAX EXEMPTION | TOTAL TAX |
|---|---|---|---|---|---|---|---|
| STATE | 2 | 12 | $181,400 | $1,179.10 | $0 | $0.00 | $1,179.10 |
| COUNTY | 2 | 12 | $181,400 | $2,448.90 | $0 | $0.00 | $2,448.90 |
| SCHOOL | 2 | 12 | $181,400 | $1,487.48 | $0 | $0.00 | $1,487.48 |
| DIST SCHOOL | 2 | 12 | $181,400 | $0.00 | $0 | $0.00 | $0.00 |
| CITY | 2 | 12 | $181,400 | $5,750.38 | $0 | $0.00 | $5,750.38 |
| FOREST | 2 | 12 | $0 | $0.00 | $0 | $0.00 | $0.00 |
| SPC SCHOOL1 | 2 | 12 | $181,400 | $997.70 | $0 | $0.00 | $997.70 |
| SPC SCHOOL2 | 2 | 12 | $181,400 | $1,741.44 | $0 | $0.00 | $1,741.44 |

TOTAL FEE & INTEREST: (Detail) $15.00

**ASSD. VALUE: $181,400.00** **$13,605.00** **GRAND TOTAL: $13,620.00**

Payoff Quote

### DEEDS

| INSTRUMENT NUMBER | DATE |
|---|---|
| 2020150444 | 12/30/2020 |

### PAYMENT INFO

| PAY DATE | TAX YEAR | PAID BY | AMOUNT |
|---|---|---|---|
| | 2022 | | $0.00 |
| 1/10/2022 | 2021 | HIGH COTTON PALISADES LLC | $13,620.00 |
| 11/4/2020 | 2020 | NELSON ROLAND & KATHERINE | $13,620.00 |
| 10/30/2019 | 2019 | OR KATHERINE Y. NELSON | $13,620.00 |
| 10/23/2018 | 2018 | ROLAND J. NELSON | $9,907.50 |
| 1/5/2018 | 2017 | - | $9,907.50 |
| 11/15/2016 | 2016 | NELSON DRUGS INC | $9,907.50 |
| 12/8/2015 | 2015 | | $9,907.50 |
| 10/28/2014 | 2014 | OR KATHERINE Y. NELSON | $9,778.51 |
| 11/22/2013 | 2013 | - | $9,778.51 |
| 11/26/2012 | 2012 | NELSON ROLAND & KATHERINE | $9,778.51 |
| 20111202 | 2011 | *** | $9,907.50 |
| 20101112 | 2010 | *** | $9,907.50 |
| 20091209 | 2009 | *** | $9,907.50 |
| 20081209 | 2008 | *** | $10,101.01 |
| 20071217 | 2007 | *** | $10,373.99 |
| 20061212 | 2006 | *** | $10,101.01 |
| 20051221 | 2005 | *** | $9,718.51 |