Inglesina
ITALIANA

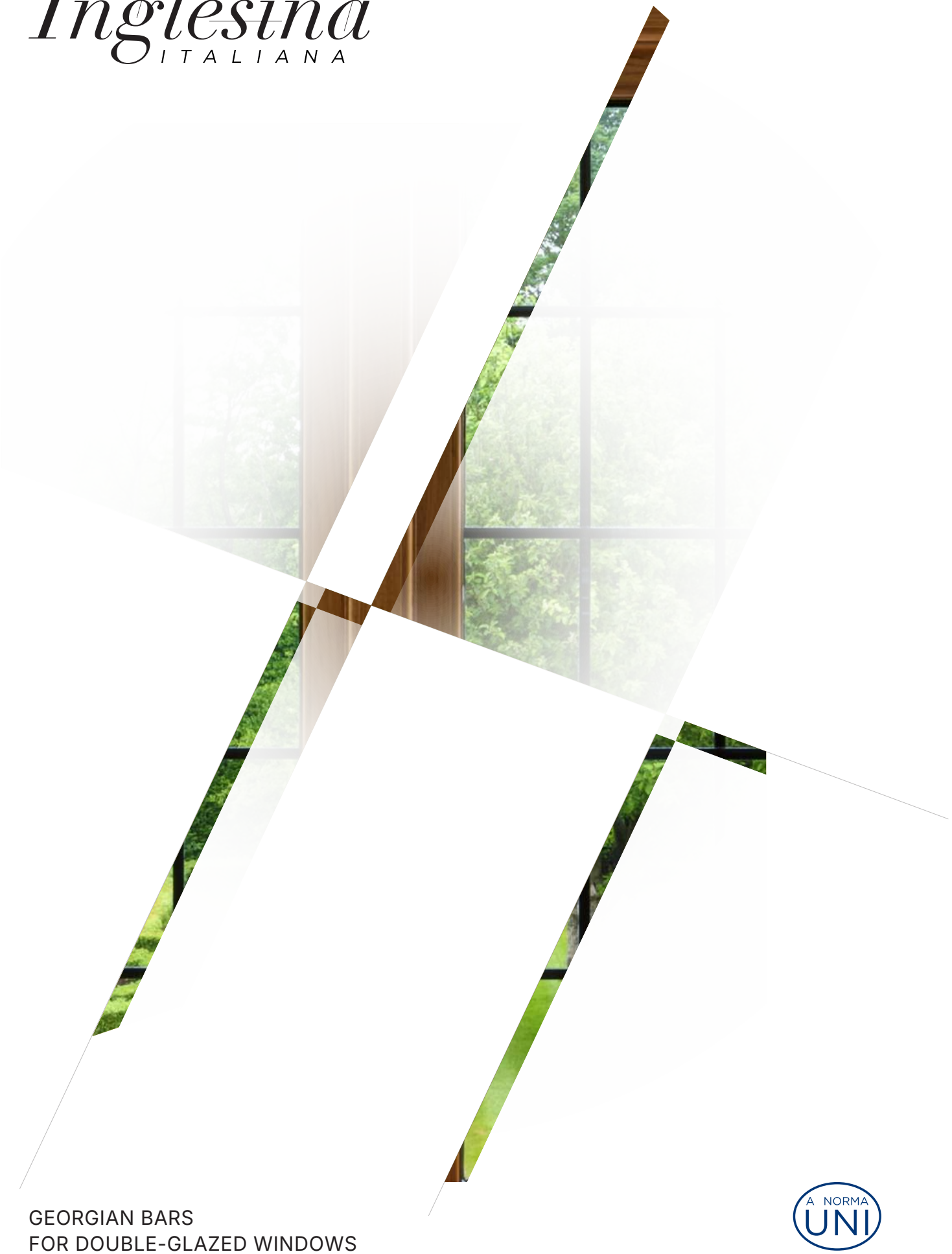

GEORGIAN BARS
FOR DOUBLE-GLAZED WINDOWS

A NORMA UNI

Varsavia

Dimensions

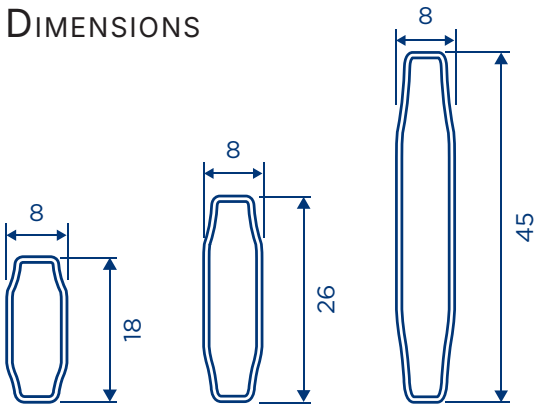



Colours

OTHER OPTIONS AVAILABLE ON REQUEST

PEARL WHITE RAL 1013 (IVORY)	RUBY RED RAL 3003	MOSS GREEN RAL 6005	PALE GREEN RAL 6021	ANTHRACITE GREY RAL 7016
CHOCOLATE BROWN RAL 8017	JET BLACK RAL 9005	PURE WHITE RAL 9010	SILVER GREY MATT RAL 7001	

Wood-effect finishes

OTHER OPTIONS AVAILABLE ON REQUEST

DOUGLAS LE01	MAHOGANY LE03	LIGHT OAK LE04	DARK OAK LE05	GOLDEN OAK LE07
MACORÈ LE08	WALNUT LE10	WHITE LE11	WINCHESTER LE67	

Assembly

MILLED SYSTEM

The grid is assembled using vertical and horizontal bars joined by through connectors. The horizontal bars are milled so that they overlap the vertical ones. Durability and rigidity are guaranteed for the whole life of the window. The system can be certified.



Germanella

Dimensions

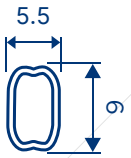



Colours

OTHER OPTIONS AVAILABLE ON REQUEST

GOLD | POLISHED SILVER | SATIN SILVER | WHITE

Assembly



HALF-LAP SYSTEM

The grid is assembled by punching the profile, overlapping the resulting notches and joining them with clip-on crosses. This system offers high rigidity and long-lasting durability, but can only be used with the Germanella profile. The system can be certified.

Duplex

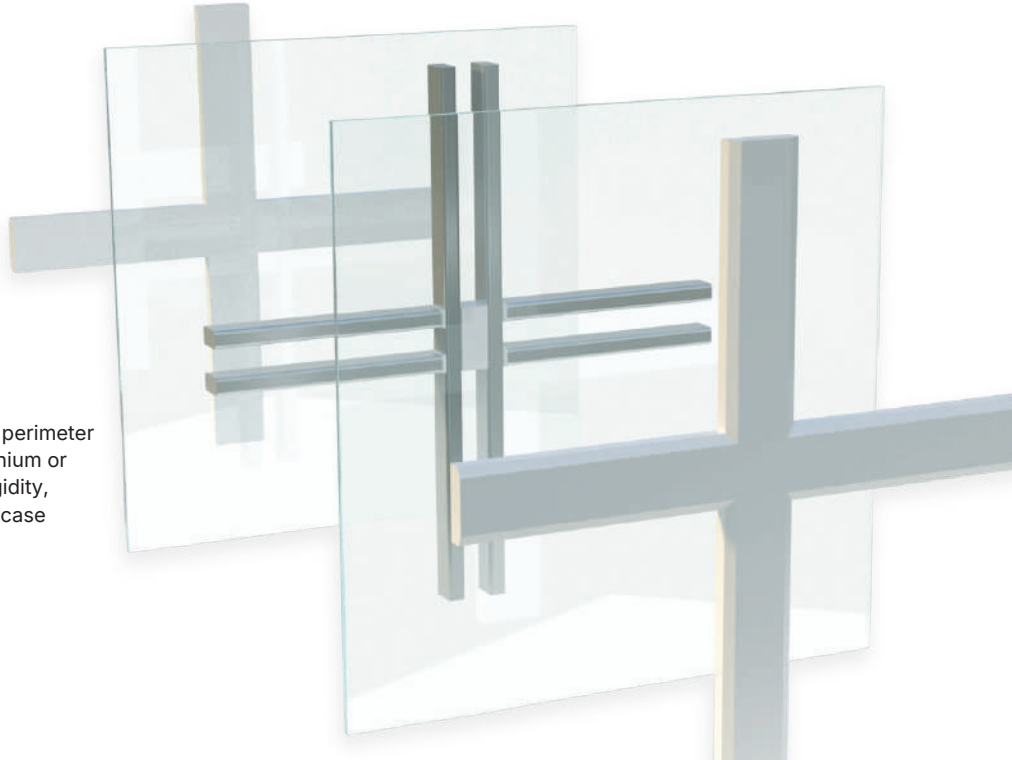

Assembly

Made with vertical bars, horizontal bars and a perimeter spacer in the same material and colour (aluminium or warm edge). To ensure excellent structural rigidity, shims are inserted, made to measure case by case according to the specific dimensions.

Quality
Precision
Speed

Inglesina ITALIANA

Via Cavalier Angelo
Manzoni 18, Maiano
26866 Sant'Angelo
Lodigiano (LO), Italy

t. +39 0371 843883
inglesinaitaliana.it
info@inglesinaitaliana.it