SEAL-LESS PUMP COMPANY
seal-less.com

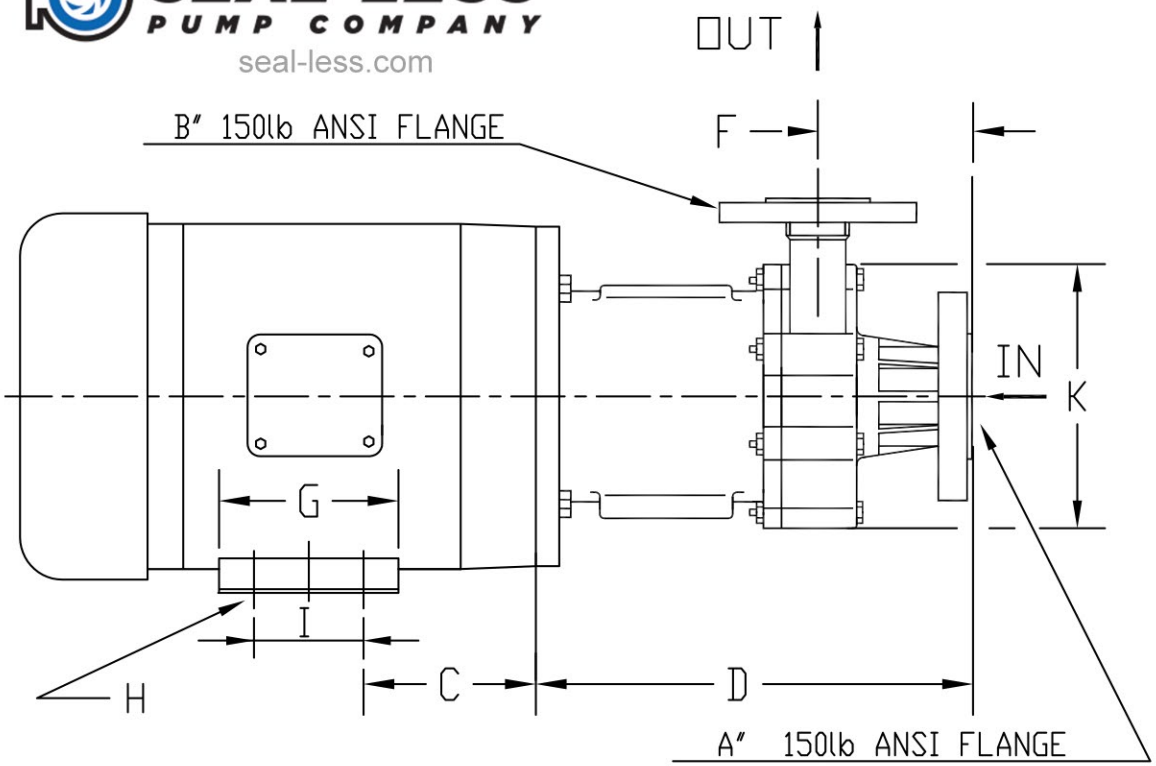

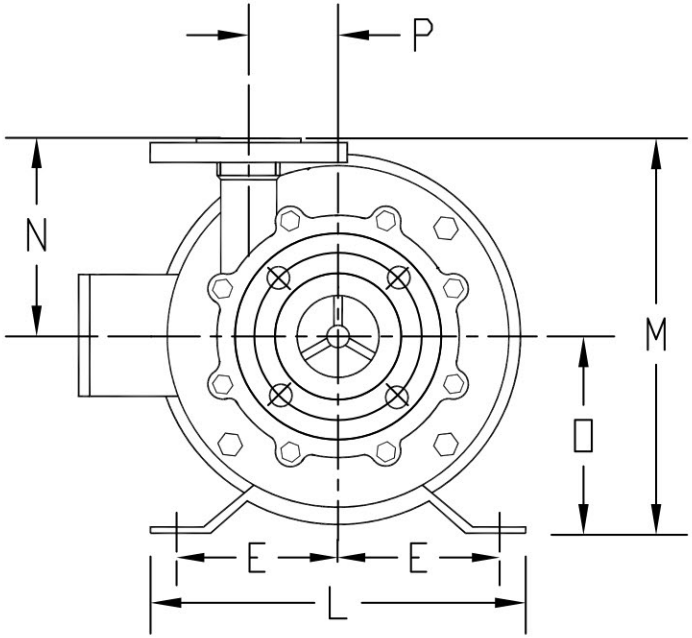

DIMENSIONS (inches)

PUMP MODEL	NEMA FRAME	A	B	C	D	E	F	G	H	I	K	L	M	N	O	P
M6SS	56C	1	3/4	2-3/4	9	2-7/16	3	4-1/2	11/32	3	5-1/2	6-1/2	7-1/4	3-3/4	3-1/2	1-13/16
M10SS	56C	1-1/2	1	2-3/4	9-11/16	2-7/16	3-1/2	4-1/2	11/32	3	5-17/32	6-1/2	7-5/8	4-1/8	3-1/2	1-3/4
	145TC					2-3/4		6	11/32	5						
M15SS	56C	1-1/2	1-1/4	2-3/4	11	2-7/16	3-15/16	4-1/2	11/32	3	7-7/8	6-1/2	8-5/8	5-1/8	3-1/2	2-7/16
	145TC					2-3/4		6	11/32	5						