FOR OFFICIAL USE

N5

National Qualifications 2026

Mark

X844/75/01

Applications of Mathematics Paper 1 (Non-calculator)



FRIDAY, 15 MAY

9:00 AM – 9:50 AM

X8447501

Fill in these boxes and read what is printed below.

Full name of centre

Town

Forename(s)

Surname

Number of seat

Date of birth

Day | Month | Year

Scottish candidate number

Total marks — 35

Attempt ALL questions.

You must NOT use a calculator.

To earn full marks you must show your working in your answers.

State the units for your answer where appropriate.

Write your answers clearly in the spaces provided in this booklet. Additional space for answers is provided at the end of this booklet. If you use this space you must clearly identify the question number you are attempting.

Use **blue** or **black** ink.

Do not remove any exam materials. You must leave this booklet on your desk; if you do not, you could lose all the marks for this paper.

Qualifications Scotland
Teisteanasan Alba

X8447501 01

© Qualifications Scotland 2026

FORMULAE LIST

Circumference of a circle $C = \pi d$

Area of a circle $A = \pi r^2$

Theorem of Pythagoras

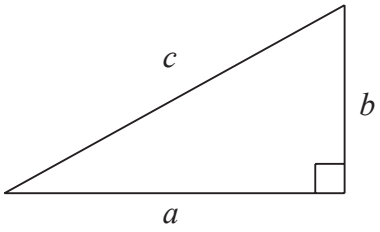

$a^2 + b^2 = c^2$

Volume of a cylinder $V = \pi r^2 h$

Volume of a prism $V = Ah$

Volume of a cone $V = \frac{1}{3}\pi r^2 h$

Volume of a sphere $V = \frac{4}{3}\pi r^3$

Standard deviation $s = \sqrt{\frac{\Sigma(x - \bar{x})^2}{n - 1}}$

or $s = \sqrt{\frac{\Sigma x^2 - \frac{(\Sigma x)^2}{n}}{n - 1}}$, where n is the sample size.

Gradient

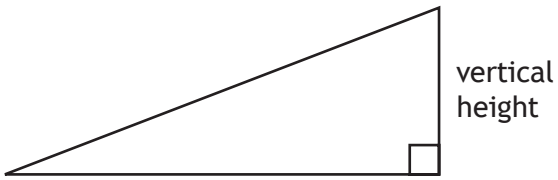

$$\text{gradient} = \frac{\text{vertical height}}{\text{horizontal distance}}$$

Total marks — 35

Attempt ALL questions

1. A tyre pressure gauge is shown.

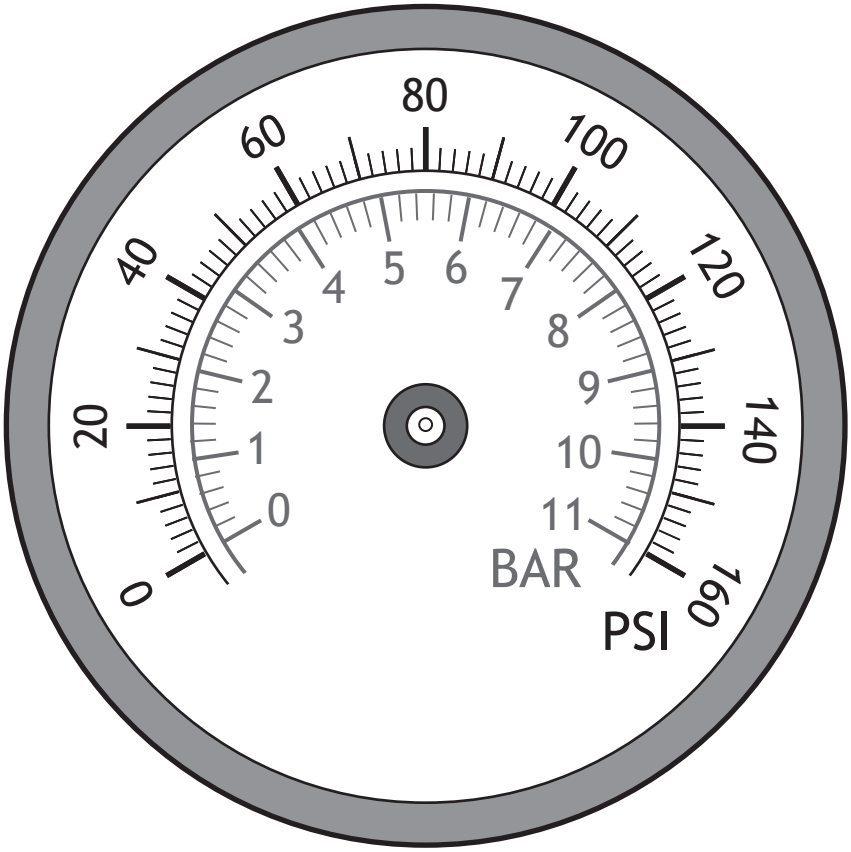

Safety regulations require a lorry's tyre pressure must be greater than or equal to 8.2 bar.

Trevor's lorry has a tyre pressure of 112 psi.

Mark **both** pressures on the gauge **and** determine if the tyre is safe. **2**

[Turn over

2. Craig is a farmer.

Each of Craig's sheep receives one dose of vitamins.

- On Monday he gave $\frac{1}{7}$ of his sheep a dose of vitamins.
- On Tuesday he gave a different $\frac{2}{3}$ of his sheep a dose of vitamins.

Calculate the fraction of Craig's sheep that have not yet had a dose of vitamins. **3**

3. Helen is saving to buy a puppy.

- Her monthly net pay is £1770.
- Her monthly expenses are £1420.
- She plans to save 20% of her remaining money each month.

The puppy will cost £1250.

Calculate the minimum number of months it will take to save this amount. **2**

[Turn over

4. A company renovates houses before they are rented out.

The table shows the tasks that must be completed before the house can be rented out.

Task	Description	Preceding task	Time (hours)
A	Inspect property	none	4
B	Repair electrics	F	6
C	Service boiler	A	3
D	Empty property	A	8
E	Order materials	A	2
F	Repair plumbing	D, E	7
G	Clean property	I	12
H	Repair flooring	B	10
I	Paint property	C, H, J	24
J	Repair walls, doors and ceilings	B	5

(a) Complete the diagram below to show the tasks and times. **2**

(An additional diagram, if required, can be found on *page 15*.)

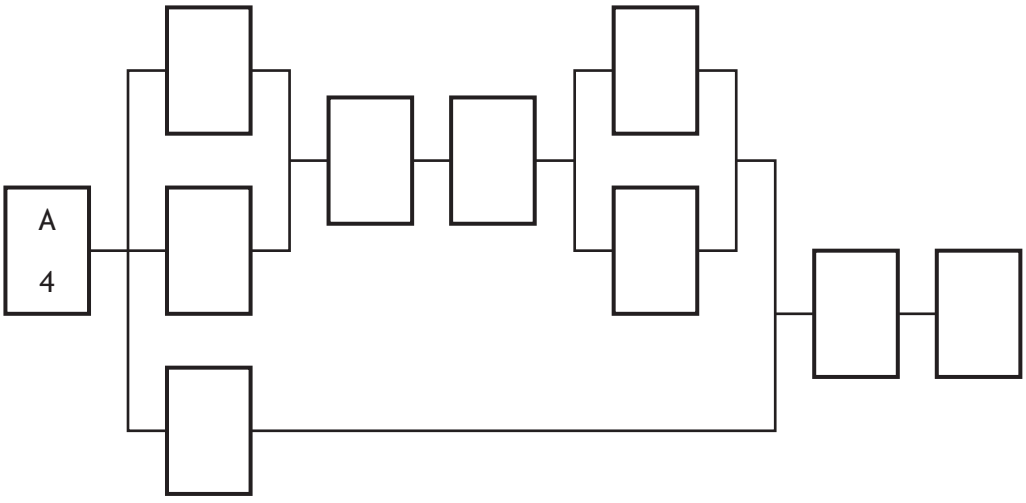

(b) Calculate the minimum time taken to complete all of the tasks. **1**

5. Ainzlie recorded the number of cars that she washed each day at a carwash over a period of ten days.

26 9 27 14 31 18 21 7 10 17

(a) For this data, calculate:

- the median
- the upper and lower quartiles. **2**

(b) Construct a box plot for this set of data. **2**

(An additional grid, if required, can be found on *page 15*.)

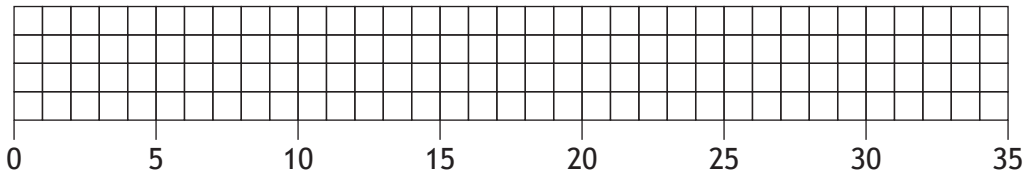

(c) Calculate the interquartile range for the number of cars that Ainzlie washed. **1**

[Turn over

6. A warehouse has a ramp at its back door.

The dimensions are shown.

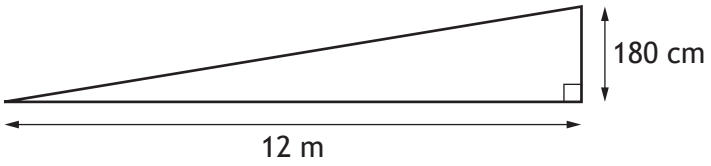

Calculate the gradient of the ramp.

Give your answer as a fraction **in its simplest form**. **2**

7. Jayanti sells kitchens.

She is paid a basic monthly salary of £1765 plus commission of 5% on her monthly sales **over** £40,000.

In March her sales totalled £56,000.

Calculate Jayanti's gross pay in March. **2**

[Turn over

8. David is a pilot. He keeps a record of the distances and times of each flight. **MARKS** DO NOT WRITE IN THIS MARGIN

The table shows the distances, to the nearest 100 miles, and times taken for the flights.

Distance (miles)	600	700	1100	1800	2000	2100	3300	3600
Flight time (hours)	1.8	2.4	2.6	4.2	4.4	5.6	8.0	7.2

(a) On the grid below draw a scattergraph to show this data. **2**

(An additional grid, if required, can be found on *page 16*.)

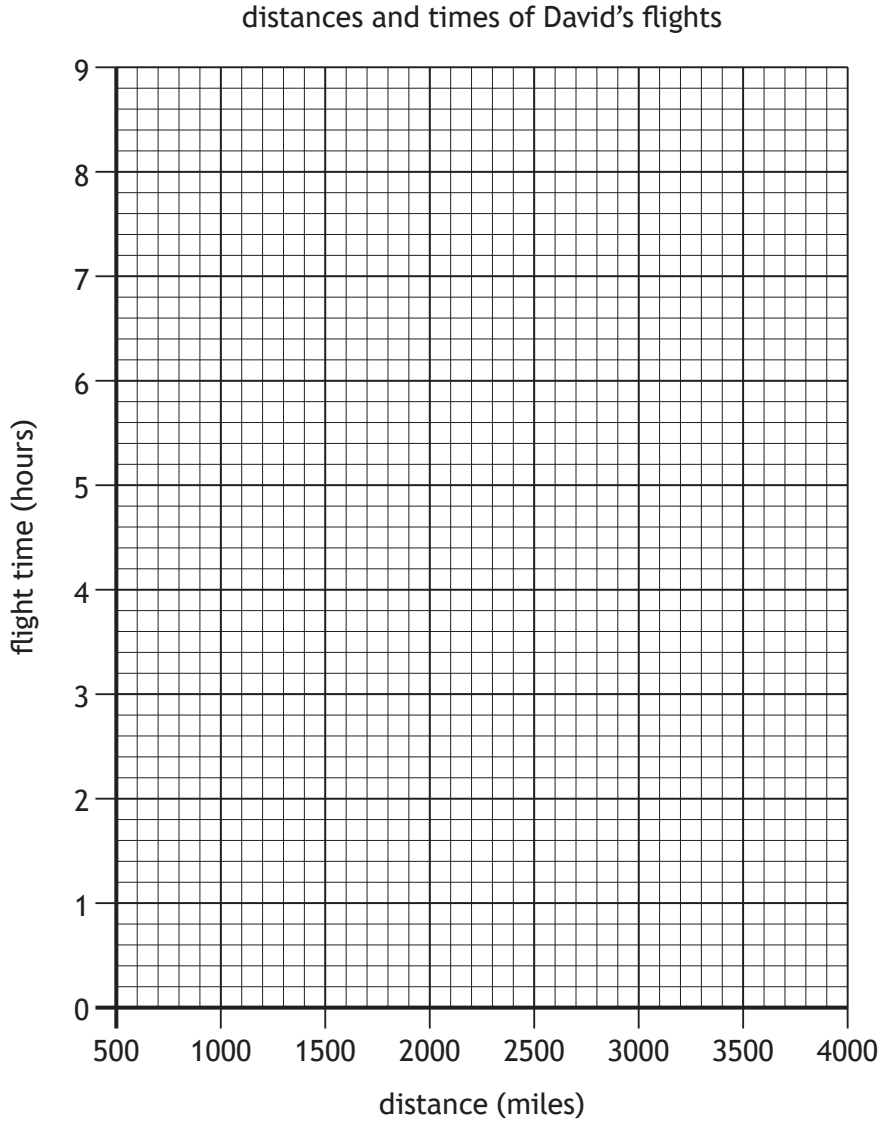

(b) Draw a line of best fit on your scattergraph. **1**

(c) David's next flight is expected to last 3.4 hours.

Use your line of best fit to estimate the distance of this flight. **1**

9. The volume flow rate (VFR) of a liquid is calculated using volume of liquid in m^3 and time in seconds.

It is calculated using the formula

$$\text{VFR} = \frac{\text{volume}}{\text{time}}$$

54 m^3 of water flows from a tank in a time of $1\frac{1}{2}$ **minutes**.

Calculate the volume flow rate of the water in m^3 **per second**.

Give your answer as a decimal. **2**

10. Emma sells bath salts.

The price of the bath salts is directly proportional to its weight.

Emma sells 450 grams of bath salts for £4.32.

Calculate the price of **1 kilogram** of bath salts. **2**

[Turn over

11. Ann is playing a game which involves rolling a fair dice and flipping a fair coin.

- The dice has six sides numbered 1, 2, 3, 4, 5, 6.
- The coin has two sides, heads and tails.

There are two possible ways to win the game:

1. The coin landing on tails **and** the dice landing on a multiple of 3.
2. The coin landing on heads **and** the dice landing on an odd number.

Calculate the probability that Ann will win on her next turn.
Give your answer as a fraction. **3**

12. A garden has been designed in the shape of a square and a quarter circle.

A fence will be built around the garden.

The fence will have a 1 metre-wide gap as shown.

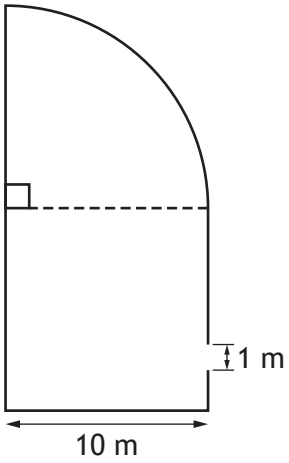

Calculate the total length of the fence.

Use $\pi = 3.14$. **2**

[Turn over

13. A company was interested in customer opinions about a soft drink.

They carried out a survey.

The results are shown in the pie chart.

results of survey about soft drink

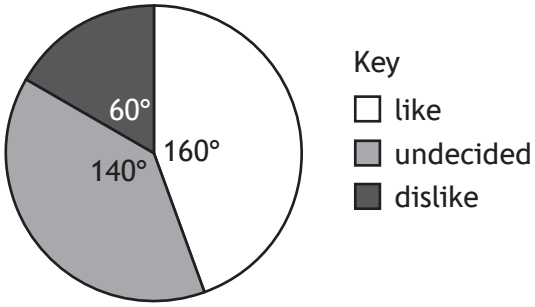

Following this survey, the company changed to a new recipe.

They then carried out a second survey.

The results of the second survey are shown in the table.

Like	Dislike	Undecided
280	70	130

Determine if there has been a decrease in the proportion of customers who **dislike** the soft drink.

Use your working to justify your answer. **3**

[END OF QUESTION PAPER]

FOR OFFICIAL USE

N5

National Qualifications 2026

Mark

X844/75/02

Applications of Mathematics Paper 2

FRIDAY, 15 MAY

10:30 AM – 12:10 PM

X8447502

Fill in these boxes and read what is printed below.

Full name of centre

Town

Forename(s)

Surname

Number of seat

Date of birth

Day | Month | Year

Scottish candidate number

Total marks — 55

Attempt ALL questions.

You may use a calculator.

To earn full marks you must show your working in your answers.

State the units for your answer where appropriate.

Write your answers clearly in the spaces provided in this booklet. Additional space for answers is provided at the end of this booklet. If you use this space you must clearly identify the question number you are attempting.

Use **blue** or **black** ink.

Do not remove any exam materials. You must leave this booklet on your desk; if you do not, you could lose all the marks for this paper.

Qualifications Scotland
Teisteanasan Alba

X8447502 01

© Qualifications Scotland 2026

FORMULAE LIST

Circumference of a circle $C = \pi d$

Area of a circle $A = \pi r^2$

Theorem of Pythagoras

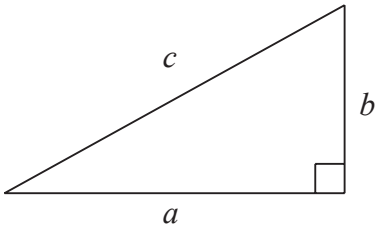

$a^2 + b^2 = c^2$

Volume of a cylinder $V = \pi r^2 h$

Volume of a prism $V = Ah$

Volume of a cone $V = \frac{1}{3}\pi r^2 h$

Volume of a sphere $V = \frac{4}{3}\pi r^3$

Standard deviation $s = \sqrt{\frac{\Sigma(x - \bar{x})^2}{n - 1}}$

or $s = \sqrt{\frac{\Sigma x^2 - \frac{(\Sigma x)^2}{n}}{n - 1}}$, where n is the sample size.

Gradient

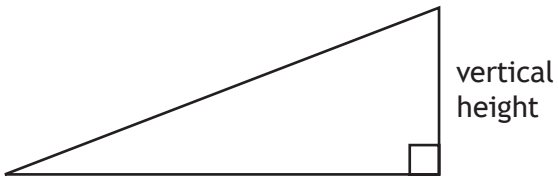

$$\text{gradient} = \frac{\text{vertical height}}{\text{horizontal distance}}$$

Total marks — 55

Attempt ALL questions

1. A new housing development is being built in a village.

The village currently has a population of 750.

The developers expect the population to increase by 36% for each of the next 3 years.

Calculate the expected population after 3 years.

Give your answer rounded to **2 significant figures**. **4**

[Turn over

2. Rachel's front door is in the shape of a rectangle with a semi-circular window. The dimensions are shown.

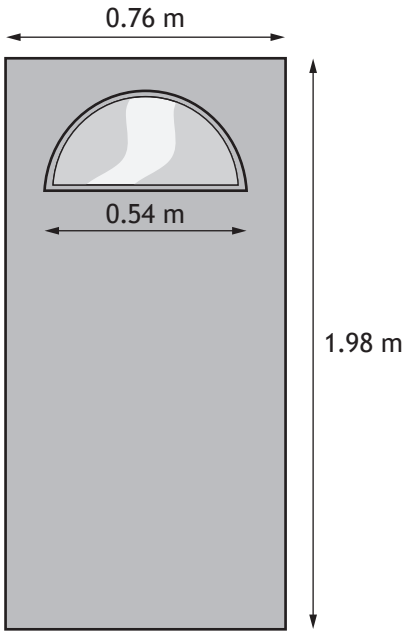

Rachel wants to paint the front of the door excluding the window.

Calculate the area of the door to be painted. **2**

3. Lee earns a gross annual salary of £42,000.

National Insurance is calculated on a person's pay before deductions such as pension contributions.

National Insurance rates per year	
Up to £12,584	0%
From £12,584 to £50,284	8%
Over £50,284	2%

(a) Calculate Lee's annual National Insurance payment. **2**

Lee pays 11.2% of their gross annual salary into their pension.

Lee's annual income tax is £4787.12.

(b) Calculate Lee's annual net pay. **2**

[Turn over

4. Shehbaz is travelling from Glasgow to Barcelona and then Istanbul.

Rates of Exchange	
Pounds Sterling (£)	**Other Currencies**
1	1.15 euros
1	44 Turkish lira

- Shehbaz converted £840 into euros.
- He stayed in Barcelona for 4 days.
- He spent 205 euros each day that he was in Barcelona.

He converted his remaining euros into Turkish lira.

(a) Calculate how many Turkish lira he received. **3**

4. (continued)

Shehbaz flies from Glasgow to Barcelona.

The plane departs at 1:30 pm local time.

The time in Barcelona is 1 hour ahead of Glasgow.

The plane flew 1680 kilometres at an average speed of 600 kilometres per hour.

(b) Calculate the local time the plane landed in Barcelona. **3**

[Turn over

4. (continued)

Shehbaz flies from Glasgow to Barcelona and then from Barcelona to Istanbul.

The flight from Glasgow to Barcelona:

- distance: 1680 km
- bearing: 161°.

The flight from Barcelona to Istanbul:

- distance: 2250 km
- bearing: 082°.

(c) (i) Construct a scale drawing to illustrate this journey. **3**
Use a scale of 1 cm : 300 km.
(An additional diagram, if required, can be found on *page 20*.)



4. (c) (continued)

The plane then returns directly to Glasgow from Istanbul.

(ii) Use your scale drawing to determine the distance **and** bearing of Glasgow from Istanbul. **2**

[Turn over

5. Alan works for a company that lays patios.

His current hourly rate is £14 per hour.

He has a contract for 35 hours of work per week but regularly works extra hours.

Alan has been offered two pay options:

- **Option 1**: Earn **time and a half** for any extra hours.
- **Option 2**: Receive a 10% increase in his hourly rate. All hours worked will be paid at this rate.

(a) Determine which option gives Alan a higher gross pay for working 40 hours in a week. **3**

5. (continued)

Alan needs to buy 120 paving slabs for a patio. He is comparing prices from three different shops, each with its own pricing.

- **Shop A**: The cost per slab is £10, and there is a 'Buy 2, Get 1 Free' deal.
- **Shop B**: The cost per slab is £9, with a 15% discount applied to the total cost of the slabs.
- **Shop C**: The cost per slab is £7.50.

(b) Determine the cheapest option for buying 120 slabs. **3**

It takes 4 workers 15 hours to lay a patio.

The patio company are able to provide **2 extra** workers.

All workers work at the same rate.

(c) Calculate how long it will take to lay the patio. **2**

[Turn over

5. (continued)

The patio company completed a job for a customer.

- It cost the company £2300 for materials and £672 for wages to complete the job.
- The customer paid £3800 for the job.

(d) Calculate the company's percentage profit. **2**

6. Katy is conducting quality control for a garden centre.

Bags of fertiliser must weigh 25 kg $\pm$ 4.8%.

Below are the weights of ten bags of fertiliser, in kilograms:

24.7	25.8	29.9	24.6	23.7
26.5	26.0	24.4	20.1	25.9

(a) Identify which of these weights are **not** suitable. **3**

[Turn over

6. (continued)

The garden centre recorded how many products it sells.

A sample of the number of spades sold per month is shown.

35 18 28 30 32 40 20

(b) Calculate the mean and standard deviation of the number of spades sold per month. **4**

The garden centre also sells hose pipes.

In the same months the mean number of hose pipes sold each month was 18 and the standard deviation was 13.

(c) Make two valid comments comparing the number of spades sold and the number of hose pipes sold. **2**

6. (continued)

Margaret buys a greenhouse from the garden centre.

The advertised price was £900.

Margaret used a payment plan to purchase the greenhouse.

The **total price** of the payment plan was **18% more** than the advertised price.

The payments are calculated as follows:

- the deposit is $\frac{1}{5}$ of the **total price**.
- there are 10 equal monthly instalments.
- followed by a final payment of £160.

(d) Calculate the cost of each monthly instalment. **3**

[Turn over

7. A golf club has adult, senior and junior members.
The ratio of members is 4:3:1 respectively.
There are 102 senior members.

(a) Calculate the total number of members in the club. **2**

7. (continued)

The club holds an annual Ladies' Championship. The winner receives a trophy.

The trophy has a metal top, consisting of a cone and sphere.

The cone and sphere both have a radius of 3.5 cm.

The total height of the metal top is 11 cm.

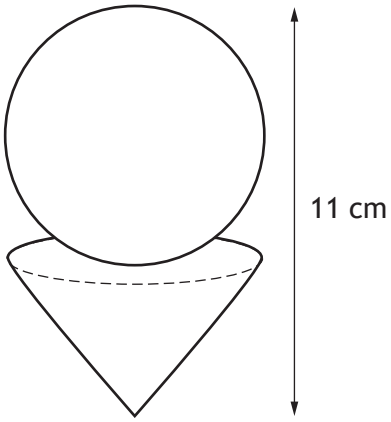

(b) Calculate the volume of metal in the trophy top. **3**

[Turn over

7. (continued)

The length of a golf hole is the distance between the tee and the flag.

Laura plays a golf hole that is 430 metres long.

Laura stands at the tee and hits her ball. Her ball stops 274 metres from the tee, as shown in the diagrams.

The distance between Laura's ball and the flag is shown by the dashed line in **Diagram 2**.

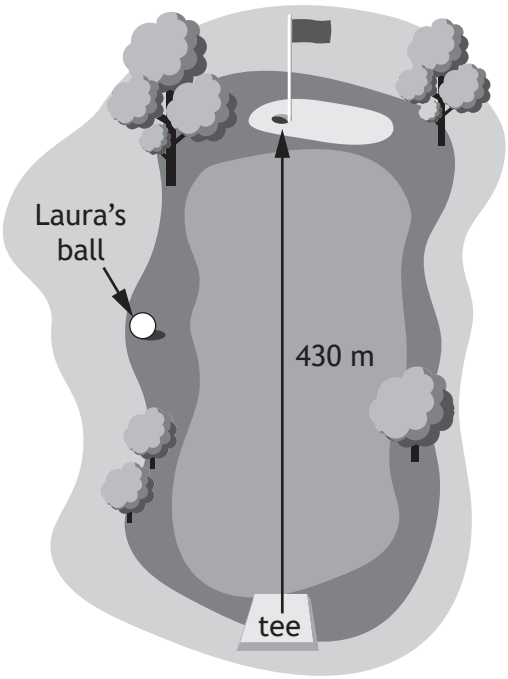

Diagram 1

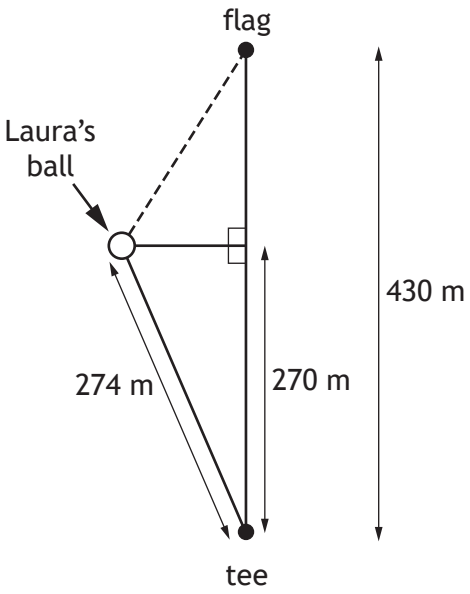

Diagram 2

(c) Calculate the distance between Laura's ball and the flag.

Do not use a scale drawing. **4**

7. (continued)

The club shop sells boxes of golf balls with dimensions as shown.



The boxes are shipped in a container with internal dimensions as shown.
The boxes must be aligned in the same direction.

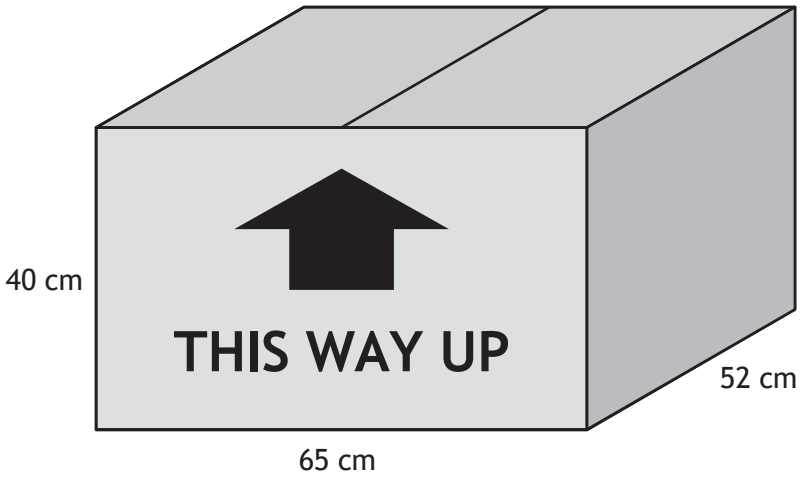

(d) Calculate the maximum number of golf ball boxes that can fit in the container. **3**

[END OF QUESTION PAPER]