FOR OFFICIAL USE

N5

National Qualifications 2024

Mark

X844/75/01

Applications of Mathematics Paper 1 (Non-calculator)



MONDAY, 13 MAY

9:00 AM – 9:50 AM

X8447501

Fill in these boxes and read what is printed below.

Full name of centre

Town

Forename(s)

Surname

Number of seat

Date of birth

Day | Month | Year

Scottish candidate number

Total marks — 35

Attempt ALL questions.

You must NOT use a calculator.

To earn full marks you must show your working in your answers.

State the units for your answer where appropriate.

Write your answers clearly in the spaces provided in this booklet. Additional space for answers is provided at the end of this booklet. If you use this space you must clearly identify the question number you are attempting.

Use **blue** or **black** ink.

Before leaving the examination room you must give this booklet to the Invigilator; if you do not, you may lose all the marks for this paper.

SQA ©

X8447501

FORMULAE LIST

Circumference of a circle $C = \pi d$

Area of a circle $A = \pi r^2$

Theorem of Pythagoras

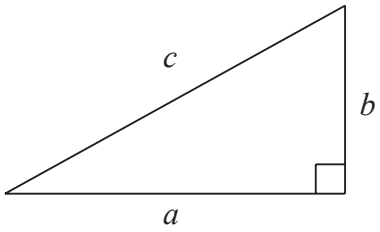

$a^2 + b^2 = c^2$

Volume of a cylinder $V = \pi r^2 h$

Volume of a prism $V = Ah$

Volume of a cone $V = \frac{1}{3}\pi r^2 h$

Volume of a sphere $V = \frac{4}{3}\pi r^3$

Standard deviation $s = \sqrt{\frac{\Sigma(x - \bar{x})^2}{n - 1}}$

or $s = \sqrt{\frac{\Sigma x^2 - \frac{(\Sigma x)^2}{n}}{n - 1}}$, where n is the sample size.

Gradient

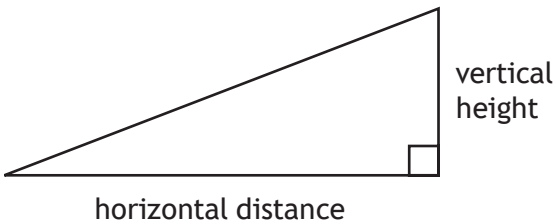

$$\text{gradient} = \frac{\text{vertical height}}{\text{horizontal distance}}$$

Total marks — 35

Attempt ALL questions

1. Ella's temperature on Wednesday was 37.5 °C.

Ella's temperature on Thursday was 98 °F.

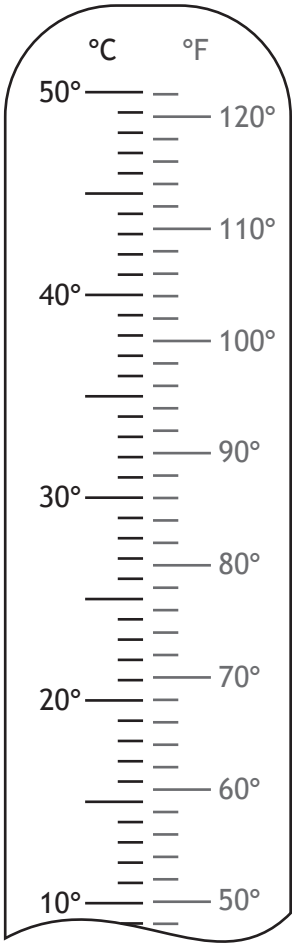

Mark both temperatures on the thermometer **and** determine on which day she had the higher temperature.

(An additional diagram, if required, can be found on *page 14*.) **2**

[Turn over

2. Hamish is doing scientific research involving foals (baby horses).

For his research, Hamish must use foals that weigh 49.5 kg $\pm$ 2 kg.

Below are the weights of 20 foals, in kilograms.

49.5	46.9	47.9	51.6	49.7
49.4	51.5	47.0	48.6	50.6
51.8	48.8	48.0	47.5	50.0
51.4	47.4	51.0	49.1	47.6

Calculate the percentage of foals that Hamish **cannot** use for his research. **3**

3. Lee is saving up to buy a laptop costing £470.

He earns £11.50 per hour and works 30 hours each week.

Lee is paid weekly.

He pays £20.25 in tax and £12.35 in National Insurance each week.

He spends £42.40 each week on rail fares.

Lee saves $\frac{1}{3}$ of his remaining money towards the laptop.

Calculate how many weeks it will take Lee to save enough money to buy the laptop. **3**

[Turn over

4. Stephen has built a new ramp.

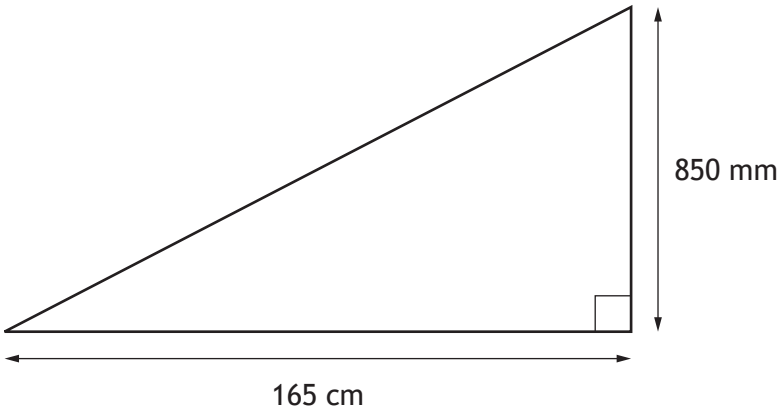

Calculate the gradient of the ramp.
Give your answer as a fraction **in its simplest form.** **2**

5. The number of films Megan downloaded each month for a year is shown.

34 19 22 10 13 38 9 12 26 7 19 21

(a) (i) For this data, calculate:

- the median
- the lower quartile
- the upper quartile. **2**

(ii) Construct a boxplot for this data.

(An additional diagram, if required, can be found on *page 14*.) **2**

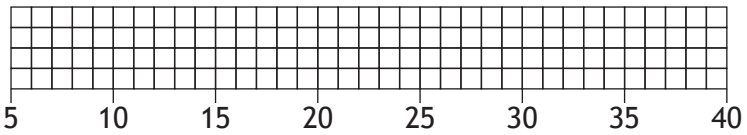

(b) (i) Calculate the interquartile range for the number of films Megan downloaded. **1**

Tommy also recorded the number of films he downloaded each month.

The interquartile range for the number of films Tommy downloaded is 10.

(ii) Make one valid comment comparing the number of films Megan and Tommy downloaded. **1**

[Turn over

6. Jamie bought 2 identical cakes for his birthday.

His friends ate $\frac{2}{3}$ of the first cake.

His family ate $\frac{3}{4}$ of the second cake.

Calculate the **total** amount of cake left over.

Give your answer as a fraction of a cake. **3**

7. A container consists of a cuboid and a triangular prism.

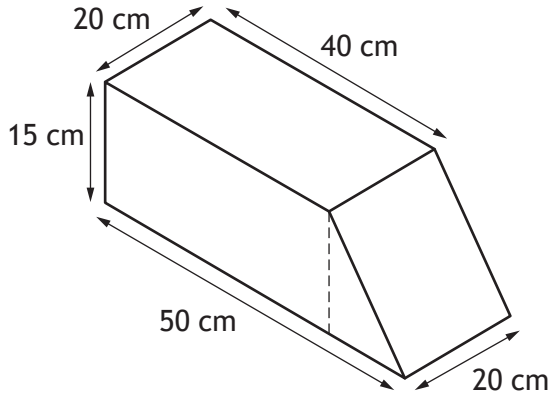

Calculate the volume of the container.

Give your answer in **litres**. **3**

[Turn over

8. Tabitha is a van driver for a supermarket that provides home deliveries.

Orders are packed into boxes for home delivery to customers.

The dimensions of each box and the internal dimensions of the van are shown in the diagrams.

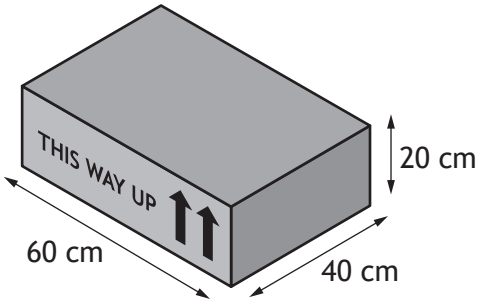

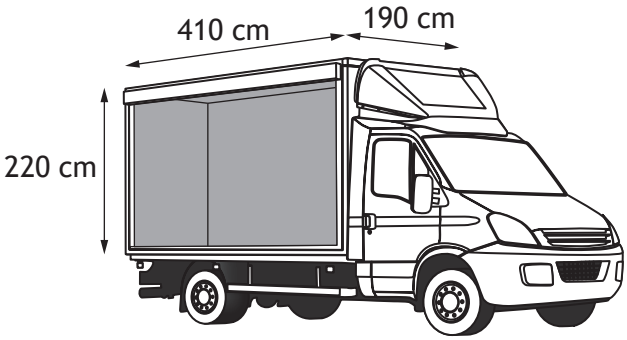

All boxes must be aligned in the same direction.

Calculate the maximum number of boxes that will fit in the van. **3**

9. A banner is being edged with ribbon.

It is in the shape of a rectangle and two quarter circles.

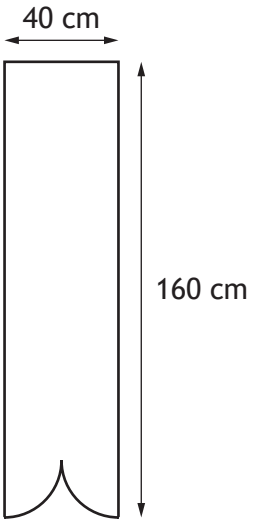

Calculate the length of ribbon needed to edge the banner.

Use $\pi = 3.14$. **2**

[Turn over

10. In 2022 and 2023 all S4 pupils at Lowgrove Academy achieved a Numeracy qualification.

The results for S4 pupils in **2022** are shown in the pie chart.

2022 Numeracy results

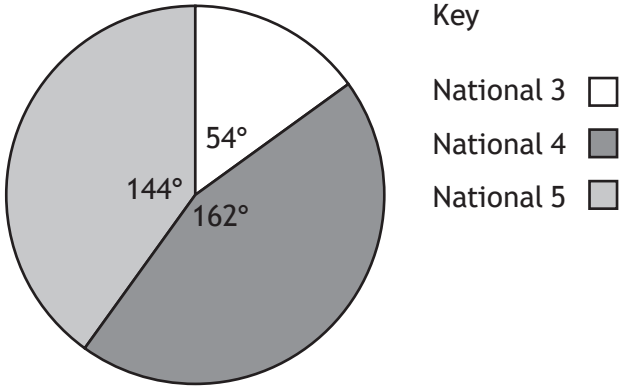

The results for S4 pupils in **2023** are shown in the table.

Qualification	Number of pupils
National 3	18
National 4	52
National 5	50

Determine if there has been an increase in the proportion of pupils achieving National 5 Numeracy.

Use your working to justify your answer. **3**

11. A helicopter was hired to drop passengers off at two separate locations.

It flew 60 km on a bearing of 227° to the first location.

It then flew 45 km on a bearing of 152° to the second location.

(a) Construct a scale drawing to illustrate this journey.

Use a scale of 1 cm : 10 km. **3**



The helicopter then returns to the start from the second location.

(b) Use your scale drawing to determine the distance and bearing of the start from the second location.

(An additional diagram, if required, can be found on *page 15*.) **2**

[END OF QUESTION PAPER]

FOR OFFICIAL USE

N5

National Qualifications 2024

Mark

X844/75/02

Applications of Mathematics Paper 2

MONDAY, 13 MAY

10:20 AM – 12:00 NOON

X8447502

Fill in these boxes and read what is printed below.

Full name of centre

Town

Forename(s)

Surname

Number of seat

Date of birth

Day | Month | Year

Scottish candidate number

Total marks — 55

Attempt ALL questions.

You may use a calculator.

To earn full marks you must show your working in your answers.

State the units for your answer where appropriate.

Write your answers clearly in the spaces provided in this booklet. Additional space for answers is provided at the end of this booklet. If you use this space you must clearly identify the question number you are attempting.

Use **blue** or **black** ink.

Before leaving the examination room you must give this booklet to the Invigilator; if you do not, you may lose all the marks for this paper.

SQA ©

FORMULAE LIST

Circumference of a circle $C = \pi d$

Area of a circle $A = \pi r^2$

Theorem of Pythagoras

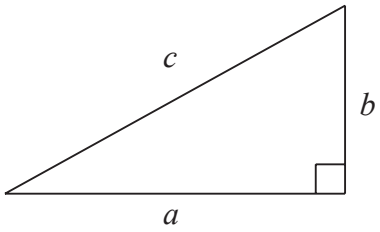

$a^2 + b^2 = c^2$

Volume of a cylinder $V = \pi r^2 h$

Volume of a prism $V = Ah$

Volume of a cone $V = \frac{1}{3}\pi r^2 h$

Volume of a sphere $V = \frac{4}{3}\pi r^3$

Standard deviation $s = \sqrt{\frac{\Sigma(x - \bar{x})^2}{n - 1}}$

or $s = \sqrt{\frac{\Sigma x^2 - \frac{(\Sigma x)^2}{n}}{n - 1}}$, where n is the sample size.

Gradient

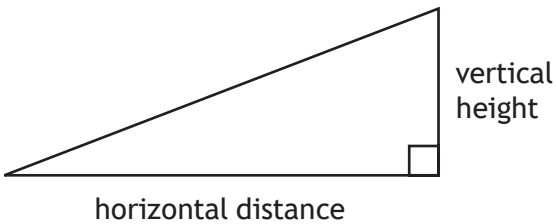

$$\text{gradient} = \frac{\text{vertical height}}{\text{horizontal distance}}$$

Total marks — 55

Attempt ALL questions

1. A school currently has 1200 pupils.

The number of pupils is expected to increase by 5.3% each year for the next 4 years.

Calculate the expected number of pupils after 4 years.

Give your answer rounded to **3 significant figures**. **4**

[Turn over

2. A snooker ball is a sphere with a diameter of 5.2 cm.

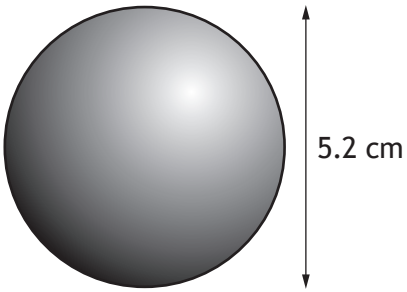

(a) Calculate the volume of the snooker ball. **2**

The density of an object can be calculated using the formula below.

$$\text{Density} = \frac{\text{mass}}{\text{volume}}$$

The mass of the snooker ball is 142 grams.

(b) Calculate the density of the snooker ball.
Give your answer in grams per cubic centimetre. **1**

3. A lottery consists of a draw with 49 balls numbered from 1 to 49.
In the draw six numbered balls are drawn **and not replaced**.
These six numbers were 3, 7, 12, 13, 28 and 42.
A further bonus ball is then drawn.
Calculate the probability of the bonus ball being a number **less than 8**. **2**

4. A section of garden is in the shape of four **identical** right-angled triangles.
It consists of a circular flower bed surrounded by a patio as shown.
The flower bed has a radius of 4 metres.

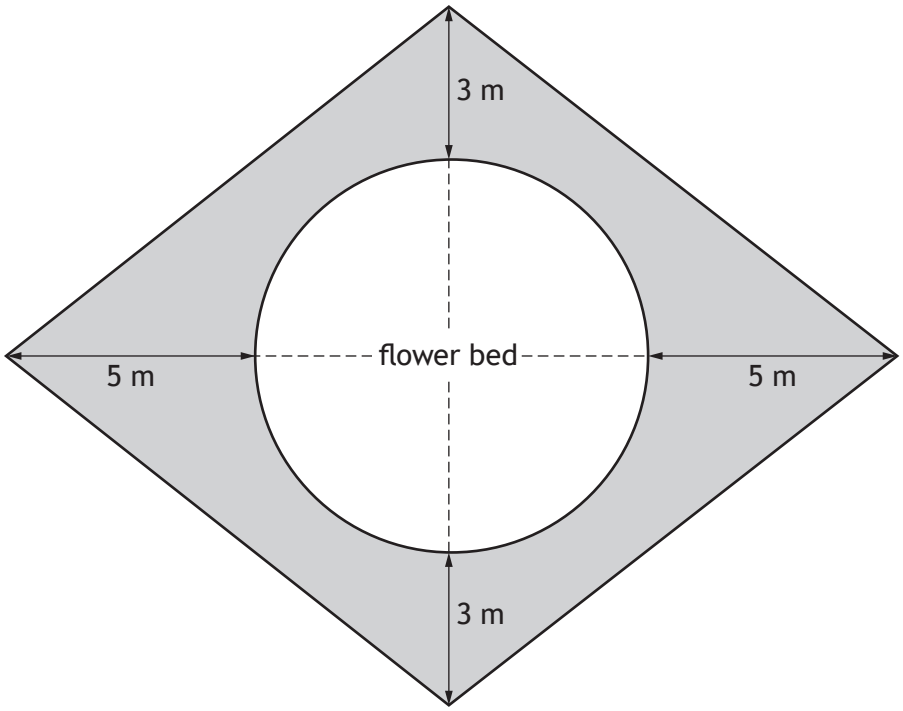

The patio is represented by the shaded area.
Calculate the area of the patio. **4**

5. Akira has an annual salary of £35,670.

National Insurance is calculated on a person's salary **before** deductions.

Annual National Insurance rates	
Up to £12,584	0%
From £12,584 to £50,284	12%
Over £50,284	2%

(a) Calculate Akira's annual National Insurance payment. **2**

Akira pays 9.4% of her **annual salary** into her pension.

Her annual income tax is £3994.42.

She is paid in 52 weekly payments.

(b) Calculate Akira's **weekly** net pay. **2**

[Turn over

6. A boat sails due East from a harbour.

A lighthouse is 500 metres due North of the harbour.

When the boat is at position A it is 600 metres away from the lighthouse.

It sails a further 400 metres to position B.

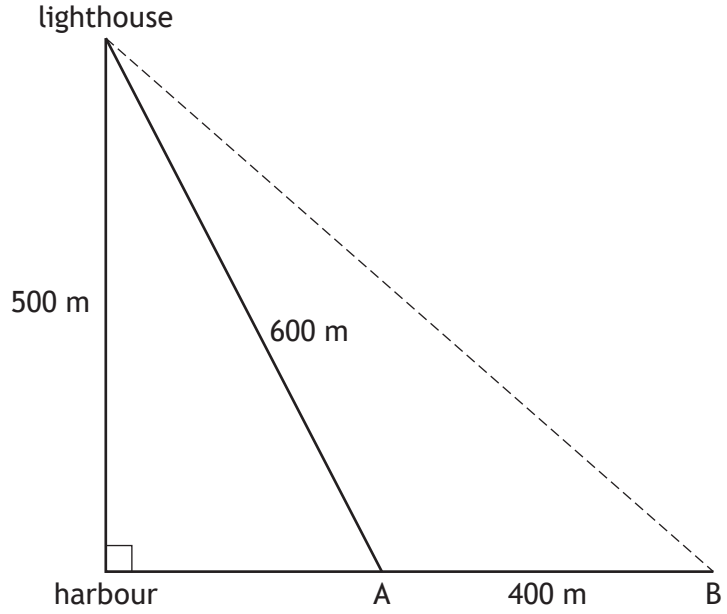

Calculate the **direct** distance from position B to the lighthouse as shown by the dotted line. **4**

Do not use a scale drawing.

7. Rab bought a house at auction to modernise and then sell.

The purchase price was £85,800.

In addition, he paid:

- 1.5% of the purchase price in legal fees
- a fee of £250 to the auction house.

(a) Calculate the **total** amount that Rab paid for the house. **1**

(b) Rab wanted to lay tiles on the hallway floor.

He needs 36 boxes of tiles.

He looked at three different shops before buying the tiles.

Shop A	Shop B	Shop C
£26 per box Special offer: Buy 2 boxes and get a third box half price	£32 per box Special offer: 30% discount on **total price** when 20 or more boxes are purchased	£22 per box

Determine the lowest price for buying 36 boxes of tiles.

Use your working to justify your answer. **3**

[Turn over

7. (continued)

(c) (i) Rab modernised the house.

The work done is shown in the table.

Activity	Description	Preceding task	Time in days
A	clear rubbish from house and garden	none	7
B	landscape the garden	A	10
C	plaster the walls	E,G	9
D	decorate the house	C	8
E	rewire the house	F	15
F	fix the roof	A	18
G	re-plumb the house	F	11
H	lay all the flooring	C	6
I	advertise the house for sale	B,D,H	1

Complete the diagram to show the tasks **and** the time taken for each.
(An additional diagram, if required, can be found on *page 17*.) **2**

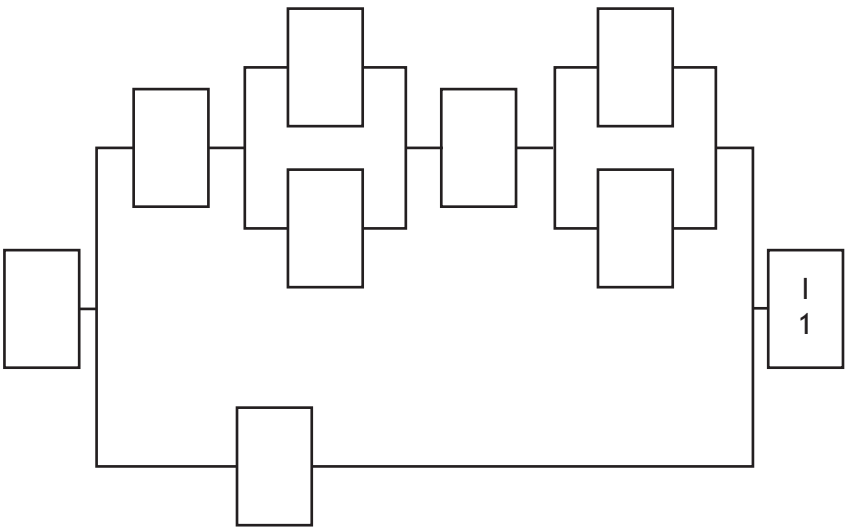

7. (c) (continued)

(ii) Calculate the minimum time required for the renovations to be completed. **2**

(d) Rab employed GreenPlant Gardeners to landscape the garden.

The company told Rab that 3 workers would take 10 days to landscape the garden.

The company were able to provide 2 **extra** workers.

All the workers work at the same rate.

They work Monday to Friday each week.

The work started on the morning of Monday 2 October.

Determine the date the work will finish. **3**

[Turn over

8. A bathroom company counts the number of visitors to their shop in Stirling each Sunday.

A sample of these results is shown.

44 55 32 39 43 26 34

(a) For these results, calculate:

(i) the mean **1**

(ii) the standard deviation. **3**

The number of visitors to the company's shop in Aberdeen each Sunday was also recorded.

The mean number of visitors was 49 and the standard deviation was 3.2.

(b) Make two valid comments about the number of visitors each Sunday to the shops in Stirling and Aberdeen. **2**

8. (continued)

The shop tracks the methods used to purchase a new bathroom.
The three methods available are debit card, credit card or cash.
Last year the purchase methods used were in a ratio of 3 : 4 : 2 respectively.
172 bathrooms were purchased using a credit card.

(c) Calculate the total number of bathrooms purchased last year. **2**

The advertised price for a deluxe bathroom is £6700.
It can be bought using a payment plan.
The payment plan is £325 more expensive than the advertised price.
The payment plan consists of:

- a deposit of 12.5% of the **advertised price**
- 50 equal monthly instalments.

(d) Calculate the monthly instalment. **3**

[Turn over

9. Emma is planning a holiday to Spain.

Her sister, who lives in the USA, sent her $100 for her birthday.

Emma exchanged it for euros to use as spending money.

Exchange Rates

£1 = 1.11 euros
£1 = $1.30

(a) Calculate how many euros Emma received. **2**

Emma worked overtime to earn some extra spending money.

Her basic rate of pay is £12.80 an hour.

She is contracted to work 37.5 hours per week. She is paid **time-and-a-half** for any overtime she works.

Last week Emma worked 5 days from 07:30 until 12:30. After a lunch break she then worked from 13:00 until 17:30 on each of those 5 days.

(b) Calculate how much Emma earned last week. **3**

9. (continued)

Emma intends to fly to Alicante airport.

She considers two options:

- a bus to Edinburgh Airport for a flight to Alicante, or
- drive to Manchester Airport for a flight to Alicante.

The costs associated with each option are shown below.

Edinburgh	
Return flights	£256
Return bus fare	£ 14.50

Manchester	
Return flights	£152
Parking	£ 49
Fuel costs	?

- The return journey from Emma's house to the car park at Manchester Airport is 492 miles.
- Emma's car will cover an average of 48 miles per gallon of fuel.
- 1 gallon = 4.545 litres.
- 1 litre of fuel costs £1.42.

(c) Determine which option is cheaper for Emma. **4**

[Turn over

9. (continued)

Emma chose to fly from Edinburgh.

Her plane took off at 11:30 local time.

The time in Alicante is 1 hour ahead of the time in Edinburgh.

The plane flew 1552.5 miles at an average speed of 575 miles per hour.

(d) Calculate the local time that the plane landed in Alicante. **3**

[END OF QUESTION PAPER]