National Qualifications 2024

2024 Applications of Mathematics

National 5 – Paper 1

Question Paper Finalised Marking Instructions

© Scottish Qualifications Authority 2024

These marking instructions have been prepared by examination teams for use by SQA appointed markers when marking external course assessments.

The information in this document may be reproduced in support of SQA qualifications only on a non-commercial basis. If it is reproduced, SQA must be clearly acknowledged as the source. If it is to be reproduced for any other purpose, written permission must be obtained from permissions@sqa.org.uk.

SQA ©

General marking principles for National 5 Applications of Mathematics

Always apply these general principles. Use them in conjunction with the detailed marking instructions, which identify the key features required in candidates' responses.

For each question, the marking instructions are generally in two sections:

generic scheme — this indicates why each mark is awarded
illustrative scheme — this covers methods which are commonly seen throughout the marking

In general, you should use the illustrative scheme. Only use the generic scheme where a candidate has used a method not covered in the illustrative scheme.

(a) Always use positive marking. This means candidates accumulate marks for the demonstration of relevant skills, knowledge and understanding; marks are not deducted for errors or omissions.

(b) If you are uncertain how to assess a specific candidate response because it is not covered by the general marking principles or the detailed marking instructions, you must seek guidance from your team leader.

(c) One mark is available for each •. There are no half marks.

(d) If a candidate's response contains an error, all working subsequent to this error must still be marked. Only award marks if the level of difficulty in their working is similar to the level of difficulty in the illustrative scheme.

(e) Only award full marks where the solution contains appropriate working. A correct answer with no working receives no mark, unless specifically mentioned in the marking instructions.

(f) Candidates may use any mathematically correct method to answer questions, except in cases where a particular method is specified or excluded.

(g) If an error is trivial, casual or insignificant, for example $6 \times 6 = 12$, candidates lose the opportunity to gain a mark, except for instances such as the second example in point (h) below.

(h) If a candidate makes a transcription error (question paper to script or within script), they lose the opportunity to gain the next process mark, for example

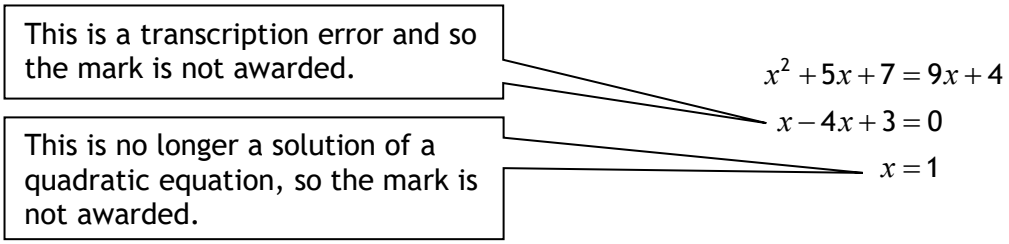

The following example is an exception to the above

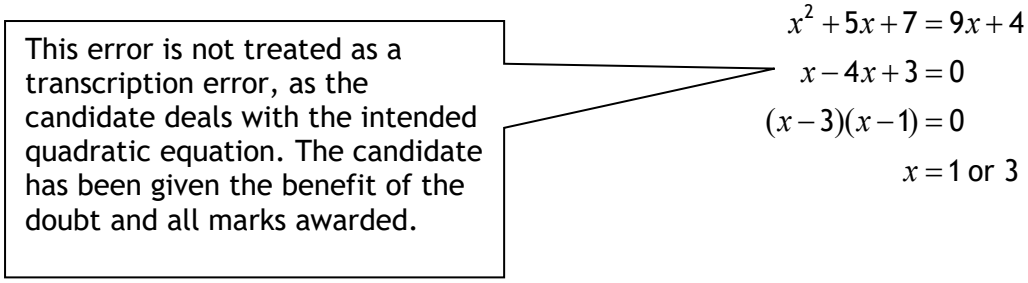

(i) **Horizontal/vertical marking**
If a question results in two pairs of solutions, apply the following technique, but only if indicated in the detailed marking instructions for the question.

Example:

	$\bullet^5$	$\bullet^6$
$\bullet^5$	$x = 2$	$x = -4$
$\bullet^6$	$y = 5$	$y = -7$

Horizontal: $\bullet^5$ $x = 2$ and $x = -4$ Vertical: $\bullet^5$ $x = 2$ and $y = 5$
$\bullet^6$ $y = 5$ and $y = -7$ $\bullet^6$ $x = -4$ and $y = -7$

You must choose whichever method benefits the candidate, **not** a combination of both.

(j) In final answers, candidates should simplify numerical values as far as possible unless specifically mentioned in the detailed marking instruction. For example

$\frac{15}{12}$ must be simplified to $\frac{5}{4}$ or $1\frac{1}{4}$ $\frac{43}{1}$ must be simplified to 43

$\frac{15}{0{\cdot}3}$ must be simplified to 50 $\frac{4/5}{3}$ must be simplified to $\frac{4}{15}$

$\sqrt{64}$ must be simplified to 8*

*The square root of perfect squares up to and including 144 must be known.

(k) Commonly Observed Responses (COR) are shown in the marking instructions to help mark common and/or non-routine solutions. CORs may also be used as a guide when marking similar non-routine candidate responses.

(l) Do not penalise candidates for any of the following, unless specifically mentioned in the detailed marking instructions:

a) working subsequent to a correct answer
b) correct working in the wrong part of a question
c) legitimate variations in numerical answers/algebraic expressions, for example angles in degrees rounded to nearest degree
d) omission of units
e) bad form (bad form only becomes bad form if subsequent working is correct), for example

$(x^3+2x^2+3x+2)(2x+1)$ written as
$(x^3+2x^2+3x+2)\times 2x+1$
$=2x^4+5x^3+8x^2+7x+2$
gains full credit

f) repeated error within a question, but not between questions or papers

(m) In any 'Show that…' question, where candidates have to arrive at a required result, the last mark is not awarded as a follow-through from a previous error, unless specified in the detailed marking instructions.

(n) You must check all working carefully, even where a fundamental misunderstanding is apparent early in a candidate's response. You may still be able to award marks later in the question so you must refer continually to the marking instructions. The appearance of the correct answer does not necessarily indicate that you can award all the available marks to a candidate.

(o) You should mark legible scored-out working that has not been replaced. However, if the scored-out working has been replaced, you must only mark the replacement working.

(p) If candidates make multiple attempts using the same strategy and do not identify their final answer, mark all attempts and award the lowest mark. If candidates try different valid strategies, apply the above rule to attempts within each strategy and then award the highest mark.

For example:

Strategy 1 attempt 1 is worth 3 marks.	Strategy 2 attempt 1 is worth 1 mark.
Strategy 1 attempt 2 is worth 4 marks.	Strategy 2 attempt 2 is worth 5 marks.
From the attempts using strategy 1, the resultant mark would be 3.	From the attempts using strategy 2, the resultant mark would be 1.

In this case, award 3 marks.

Marking Instructions for each question

Question	Generic scheme	Illustrative scheme	Max mark
1.	• [1] Strategy/communication: mark one temperature correctly on scale • [2] Communication: mark other temperature on scale and conclusion consistent with working	• [1] 37.5 or 98 • [2] 98 or 37.5 and Wednesday	**2**

Notes:
1. Any mark between 37 and 38 can be accepted for 37.5.

Commonly Observed Responses:
1. Wednesday — award 0/2 ××
2. $98 = 36.5$, Wednesday, with no marks or only one mark on diagram — award 1/2 ×✓
3. $37.5 = 100$, Wednesday, with no marks or only one mark on diagram — award 1/2 ×✓

Question	Generic scheme	Illustrative scheme	Max mark
2.	• [1] Process: state limits • [2] Process: identify unsuitable foals • [3] Process/communication: calculate percentage that are not suitable	• [1] 47.5 and 51.5 • [2] 46.9, 47.0, 47.4, 51.6, 51.8 • [3] 25%	**3**

Notes:
1. Correct answer without working — award 0/3
2. • [2] can be awarded where the weights have been marked on the list.
3. • [3] is only available for expressing their identified number of foals as a percentage of 20.

Commonly Observed Responses:
1. 47.5 and 51.5 ® no weights identified ®25% — award 2/3 ✓×✓
2. No limits stated ® 46.9, 47.0, 47.4, 51.6, 51.8 ® 25% — award 2/3 ×✓✓
3. No limits stated ® no weights identified ® $\frac{5}{20}$ = 25% — award 1/3 ××✓
4. No limits stated → 46.9, 47.0, 47.4, 47.5, 51.5, 51.6, 51.8 → 35% — award 1/3 ××✓
5. No limits stated ® no weights identified ® $\frac{5}{20}$ — award 0/3 ×××

Question	Generic scheme	Illustrative scheme	Max mark
3.	$\bullet^1$ Process: calculate gross pay $\bullet^2$ Process: calculate left over money $\bullet^3$ Process: calculate number of weeks	$\bullet^1$ 345 $\bullet^2$ 270 $\bullet^3$ $(470 \div 90 = 5.2\ldots)$ leading to 6 weeks.	**3**

Notes:

1. Correct answer without working award 0/3
2. $\bullet^3$ is only available for calculations involving 470 with the exception of COR 2, COR 3 and COR 5.
3. $\bullet^3$ is available for an incomplete calculation eg $470 \div 90 = 5$ or $5\ldots \rightarrow 6$.
4. Ignore errors in division calculations after the decimal point or in remainder.

Commonly Observed Responses:

1. $470 \div 90 = 6$ award 3/3 ✓✓✓
2. $540 \div 90 = 6$ award 3/3 ✓✓✓
3. $90 \times 6 = 540 \rightarrow 6$ award 3/3 ✓✓✓
4. $470 \div 90 \rightarrow 5 \text{ r } 20 \rightarrow 6$ award 3/3 ✓✓✓
5. $47 \div 9 \rightarrow 5 \text{ r } 2 \rightarrow 6$ award 3/3 ✓✓✓

Question	Generic scheme	Illustrative scheme	Max mark
4.	$\bullet^1$ Process: consistent units for numerator and denominator $\bullet^2$ Process/communication: state gradient and give answer as fraction in simplest form	$\bullet^1$ 850 and 1650 **OR** $\bullet^1$ 85 and 165 $\bullet^2$ $\frac{17}{33}$	**2**

Notes:

1. Correct answer without working award 2/2
2. $\bullet^2$ is not available when an attempt is made to further simplify a fraction already in its simplest form eg $\frac{17}{33} = \frac{1}{2}$
3. $\bullet^2$ is not available where candidates only give their answer as a decimal or a percentage.

Commonly Observed Responses:

1. $\frac{850}{165} \rightarrow \frac{170}{33}$ award 1/2 ×✓
2. $\frac{850}{165}$ award 0/2 ××
3. $\frac{165}{850} \rightarrow \frac{33}{170}$ award 0/2 ××

Question			Generic scheme	Illustrative scheme	Max mark
5.	(a)	(i)	$\bullet^1$ Process: determine the median $\bullet^2$ Process: find the upper and lower quartiles	$\bullet^1$ 19 $\bullet^2$ $Q_1 = 11$ $Q_3 = 24$	**2**

Notes:

Ordered list: 7, 9, 10, 12, 13, 19, 19, 21, 22, 26, 34, 38.

1. The answers for (a)(i) can be inferred from the boxplot if not stated.
2. If the numbers are unordered, only $\bullet^2$ is available, see COR 1.
3. If **one** number is missed from or added to an **unordered** list, $\bullet^1$ and $\bullet^2$ are not available.
4. If **one** number is missed from or added to an **ordered** list,
   - $\bullet^1$ is not available,
   - $\bullet^2$ is only available when all three quartiles are consistent with candidate's list.
5. If **more than one** number is missed from or added to an **ordered** list, $\bullet^1$ and $\bullet^2$ are not available.

Commonly Observed Responses:

1. From unordered list: median = 23.5 and quartiles of 16 and 16.5. award 1/2 ×✓

		(ii)	$\bullet^3$ Communication: end points marked $\bullet^4$ Communication: Q_1, Q_2 and Q_3 marked and boxplot drawn	$\bullet^3$ end points 7 and 38 $\bullet^4$ box showing Q_1, Q_2 and Q_3	**2**

Notes:

1. The answers for (a)(i) can be inferred from the boxplot if not stated.
2. If the candidate constructs a dot plot award 0/2.
3. $\bullet^4$ is not available for candidates who only mark the five figure summary using dots or crosses.
4. $\bullet^4$ cannot be awarded if more than 5 values are marked.
5. $\bullet^{3\&4}$ are still available when the calculated value of Q_2 does not lie between the calculated values of Q_1 and Q_3.

Commonly Observed Responses:

Question			Generic scheme	Illustrative scheme	Max mark
5.	(b)	(i)	$\bullet^5$ Process: calculate interquartile range	$\bullet^5$ 13	**1**

Notes:

1. $\bullet^5$ must be consistent with quartiles from $\bullet^2$.

Commonly Observed Responses:

1. IQR = 13, SIQR = 6.5 — award 1/1 ✓
2. $13 \rightarrow 6.5$ — award 0/1 ×

		(ii)	$\bullet^6$ Communication: comment regarding consistency	$\bullet^6$ eg the number of films Tommy downloaded was more consistent	**1**

Notes:

1. Answer must be consistent with answer to (b)(i).
2. Numerical comparisons are not required but when used they must be accurate.
3. Comments **must** refer to films and/or downloads as well as Tommy and/or Megan.
4. For the award of $\bullet^6$

Accept eg

a) Tommy's films are more consistent.
b) The films Tommy downloads are less varied.
c) Megan's number of films downloaded is more spread out.
d) Megan's downloads are more varied.
e) There was less variation in his number of films.

Do not accept eg

f) "**On average**" contained in any statement.
g) The **range** of Tommy's number of films is more consistent.
h) Megan's **interquartile range** is more varied.

Commonly Observed Responses:

Question			Generic scheme	Illustrative scheme	Max mark
6.			**Method 1** $\bullet^1$ Strategy: evidence of common denominator $\bullet^2$ Process: add fractions $\bullet^3$ Process: calculate the fraction of cake left over	 $\bullet^1$ 12 or equivalent $\bullet^2$ $\frac{17}{12}$ $\bullet^3$ $\frac{7}{12}$ (or equivalent)	**3**
			Method 2 $\bullet^1$ Process: calculate the remaining fraction of each cake $\bullet^2$ Strategy: evidence of common denominator $\bullet^3$ Process: calculate the fraction of cake left over	$\bullet^1$ $\frac{1}{3}$ and $\frac{1}{4}$ $\bullet^2$ 12 or equivalent $\bullet^3$ $\frac{7}{12}$ (or equivalent)	

Notes:

1. Correct answer without working award 0/3
2. In method 1, $\bullet^2$ can be implied by $\bullet^3$.
3. In method 1, $\bullet^3$ is only available when the fraction is calculated by subtracting from 2.
4. In method 2, $\bullet^3$ is only available for adding the 2 fractions from $\bullet^1$.
5. The final answer does not need to be in its simplest form.
6. Do not penalise incorrect simplification of final answer.
7. Candidates working in decimals must work to at least 3 decimal places for $\bullet^2$ to be awarded in method 1 or $\bullet^3$ in method 2.
8. Candidates working in percentages must work to at least 1 decimal place for $\bullet^2$ to be awarded in method 1 or $\bullet^3$ in method 2.

Commonly Observed Responses:

For candidates using method 1:

1. $\frac{2}{12}+\frac{3}{12}=\frac{5}{12}\rightarrow\frac{19}{12}$ award 2/3 ✓×✓
2. $\frac{8}{12}+\frac{9}{12}=\frac{17}{24}\rightarrow\frac{31}{24}$ award 2/3 ✓×✓
3. $\frac{8}{12}+\frac{9}{12}=\frac{17}{12}\rightarrow\frac{7}{24}$ award 2/3 ✓✓×
4. $\frac{2}{12}+\frac{3}{12}=\frac{5}{12}\rightarrow\frac{7}{12}$ award 1/3 ✓××
5. $\frac{8}{12}+\frac{9}{12}=\frac{17}{24}\rightarrow\frac{7}{24}$ award 1/3 ✓××
6. $\frac{2}{3}+\frac{3}{4}=\frac{5}{7}\rightarrow\frac{9}{7}$ award 1/3 ××✓
7. $\frac{2}{3}+\frac{3}{4}=\frac{5}{7}\rightarrow\frac{2}{7}$ award 0/3 ×××

For candidates using method 2:

8. $\frac{1}{3}+\frac{1}{4}=\frac{7}{12}\rightarrow\frac{5}{12}$ award 2/3 ✓✓×
9. $\frac{1}{3}+\frac{1}{4}=\frac{7}{12}\rightarrow\frac{17}{12}$ award 2/3 ✓✓×

Question			Generic scheme	Illustrative scheme	Max mark
7.			**Method 1** •[1] Process: calculate volume of triangular prism •[2] Process: calculate volume of cuboid •[3] Process: calculate total volume and convert to litres	•[1] 1500 •[2] 12 000 or 15 000 •[3] 13.5 (litres)	**3**
			Method 2 •[1] Process: calculate area of triangle •[2] Process: calculate area of the cross section •[3] Process: calculate total volume and convert to litres	•[1] 75 •[2] 675 •[3] 13.5 (litres)	

Notes:

1. Correct answer without working award 0/3
2. •[3] is only available for converting a composite area or a composite volume to a volume in litres.

Commonly Observed Responses:

In method 1:

1. $1500 \rightarrow 1.5$ award 1/3 ✓✗✗
2. $12000 \rightarrow 12$ award 1/3 ✗✓✗
3. $15000 \rightarrow 15$ award 1/3 ✗✓✗

Question	Generic scheme	Illustrative scheme	Max mark
8.	$\bullet^1$ Process: calculate the number of boxes along the length and breadth of the van for one arrangement $\bullet^2$ Process: calculate the number of boxes along the length and breadth of the van for the other arrangement $\bullet^3$ Process/Communication: calculate the number of boxes in each arrangement and state maximum	$\bullet^1$ $(410 \div 60 =) 6 \cdot \ldots$ $(190 \div 40 =) 4 \cdot \ldots$ $\bullet^2$ $(410 \div 40 =) 10 \cdot \ldots$ $(190 \div 60 =) 3 \cdot \ldots$ $(220 \div 20 = 11)$ $\bullet^3$ $(6 \times 4 \times 11 =) 264$ $(10 \times 3 \times 11 =) 330$ Maximum: 330 boxes	**3**

Notes:

1. Correct answer without working — award 0/3
2. Where the candidate only considers volume — award 0/3
3. $\bullet^2$ can only be awarded where the 20 is consistent with the same dimension as $\bullet^1$.
4. $\bullet^3$ is still available if the candidate only states $6 \times 4 = 24$ instead of $6 \times 4 \times 11 = 264$.
5. Where the candidate considers more than two arrangements do not award $\bullet^3$.
6. Where the candidate only considers one arrangement a maximum of 1 mark is available.

Commonly Observed Responses:

1. $11 \times 4 \times 6 = 264$ and $20 \times 4 \times 5 = 400 \rightarrow 400$ boxes — award 2/3 ✓✗✓
2. $6 \times 4 \times 11 = 264$ and $6 \times 5 \times 9 = 270 \rightarrow 270$ boxes — award 2/3 ✓✗✓
3. $10 \times 3 \times 11 = 330$ and $10 \times 9 \times 3 = 270 \rightarrow 330$ boxes — award 2/3 ✗✓✓
4. $10 \times 3 \times 11 = 330$ and $20 \times 3 \times 5 = 300 \rightarrow 330$ boxes — award 2/3 ✗✓✓
5. $7,5$ and $11,4 \rightarrow 385$ and $484 \rightarrow 484$ boxes — award 2/3 ✗✓✓
6. $7,5$ and $11,4$ with incorrect or no total number of boxes — award 1/3 ✗✓✗

Question			Generic scheme	Illustrative scheme	Max mark
9.			•[1] Process: calculate arc length of one semi-circle or two quarter circles •[2] Process: calculate perimeter	•[1] 62.8 or $31.4 + 31.4$ •[2] 422.8 (cm)	**2**

Notes:

1. Correct answer without working — award 0/2
2. For candidates who use πr^2 — award 0/2
3. BE AWARE
   62.8 can be calculated from a range of invalid methods.
4. •[1] is not available where there is evidence that an incorrect diameter is used.
5. •[1] is not available when the answer is a whole number eg $125.6 \div 2 = 63$.
6. •[2] can only be awarded for $160 + 160 + 40$ added to the candidates calculated arc length.

Commonly Observed Responses:

1. $125.6 \div 2 = 62.8 \rightarrow 63 + 160 + 160 + 40 = 423$ — award 2/2 ✓✓
2. $140 + 140 + 40 + 62.8 \rightarrow 382.8$ — award 1/2 ✓×
3. 360 — award 0/2 ××
4. 400 — award 0/2 ××

Question			Generic scheme	Illustrative scheme	Max mark
10.			**Method 1** •[1] Strategy/communication: identify fraction of N5 in 2023 •[2] Strategy/process: express both N5 fractions in comparable form •[3] Communication: state conclusion consistent with working	•[1] $\frac{50}{120}$ or equivalent •[2] $\frac{150}{360}$ and $\frac{144}{360}$ **OR** •[2] 0.416… and 0.4 or equivalent •[3] Yes, with evidence of 2 values in comparable form indicated	**3**
			Method 2 •[1] Strategy/communication: identify fraction of N5 in 2023 or state the angle per pupil •[2] Process: calculate angle for N5 in 2023 •[3] Communication: state conclusion consistent with working	•[1] $\frac{50}{120}$ or $3(^\circ)$ or equivalent •[2] 150 •[3] Yes, with evidence of 150 and 144 indicated	
			Method 3 •[1] Strategy/communication: identify fraction of N5 in 2022 •[2] Process: calculate fraction of 120 •[3] Communication: state conclusion consistent with working	•[1] $\frac{144}{360}$ or equivalent •[2] 48 •[3] Yes, with evidence of 50 and 48 indicated	

Notes:

1. For all methods •[1] can be implied by •[2].
2. Where candidate selects the incorrect angle from the pie chart •[3] is still available.
3. •[3] can be awarded where a candidate states an increase of 6 when using method 2, or an increase of 2 when using method 3.

Commonly Observed Responses:

Question			Generic scheme	Illustrative scheme	Max mark
11.	(a)		$\bullet^1$ Process: calculate scale distances $\bullet^2$ Process/communication: measure correct bearing from start $\bullet^3$ Process/communication: draw correct length from start, measure correct bearing, and draw correct length from first location	$\bullet^1$ 6 cm 4.5 cm $\bullet^2$ Bearing of $227°(\pm1°)$ measured correctly from start point $\bullet^3$ $6\text{cm}(\pm0.1\text{cm})$ drawn and a bearing of $152°(\pm1°)$ measured and $4.5\text{cm}(\pm0.1\text{cm})$ drawn	**3**
Notes: 1. $\bullet^1$ can be implied by drawing 2 lines of the correct length. 2. Candidates who draw 2 lines from the start point can receive a maximum mark of 2/3. 3. Bearing for both legs must be $\pm1°$ relative to the original North line.					
Commonly Observed Responses: 1. 6 cm line with bearing of $227°$ and 4.5 cm line with bearing of $152°$ both drawn from start point award 2/3 ✓✓×					
	(b)		$\bullet^4$ Process/communication: state bearing consistent with diagram $\bullet^5$ Process/communication: state distance consistent with diagram	$\bullet^4$ $016(°)$ $\bullet^5$ 84 (km)	**2**
Notes: 1. $\bullet^4$ and $\bullet^5$ are not available where a candidate has drawn both legs starting from the same start point in (a). 2. The third leg of the journey need not actually be drawn. 3. For $\bullet^4$ answer must be a **three** figure bearing.					
Commonly Observed Responses:					

[END OF MARKING INSTRUCTIONS]

National Qualifications 2024

2024 Applications of Mathematics

Paper 2

Question Paper Finalised Marking Instructions

© Scottish Qualifications Authority 2024

These marking instructions have been prepared by examination teams for use by SQA appointed markers when marking external course assessments.

The information in this document may be reproduced in support of SQA qualifications only on a non-commercial basis. If it is reproduced, SQA must be clearly acknowledged as the source. If it is to be reproduced for any other purpose, written permission must be obtained from permissions@sqa.org.uk.

General marking principles for National 5 Applications of Mathematics

Always apply these general principles. Use them in conjunction with the detailed marking instructions, which identify the key features required in candidates' responses.

For each question, the marking instructions are generally in two sections:

generic scheme — this indicates why each mark is awarded
illustrative scheme — this covers methods which are commonly seen throughout the marking

In general, you should use the illustrative scheme. Only use the generic scheme where a candidate has used a method not covered in the illustrative scheme.

(a) Always use positive marking. This means candidates accumulate marks for the demonstration of relevant skills, knowledge and understanding; marks are not deducted for errors or omissions.

(b) If you are uncertain how to assess a specific candidate response because it is not covered by the general marking principles or the detailed marking instructions, you must seek guidance from your team leader.

(c) One mark is available for each •. There are no half marks.

(d) If a candidate's response contains an error, all working subsequent to this error must still be marked. Only award marks if the level of difficulty in their working is similar to the level of difficulty in the illustrative scheme.

(e) Only award full marks where the solution contains appropriate working. A correct answer with no working receives no mark, unless specifically mentioned in the marking instructions.

(f) Candidates may use any mathematically correct method to answer questions, except in cases where a particular method is specified or excluded.

(g) If an error is trivial, casual or insignificant, for example $6 \times 6 = 12$, candidates lose the opportunity to gain a mark, except for instances such as the second example in point (h) below.

(h) If a candidate makes a transcription error (question paper to script or within script), they lose the opportunity to gain the next process mark, for example

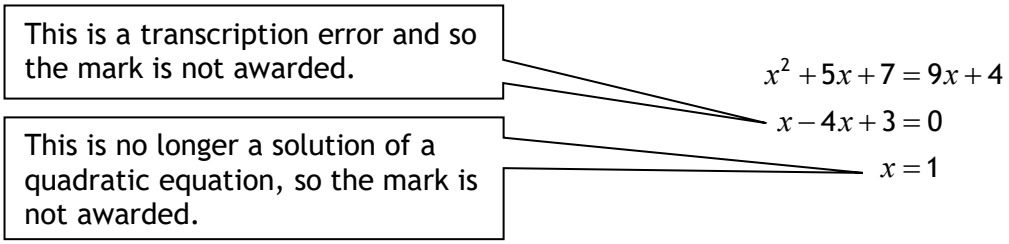

The following example is an exception to the above

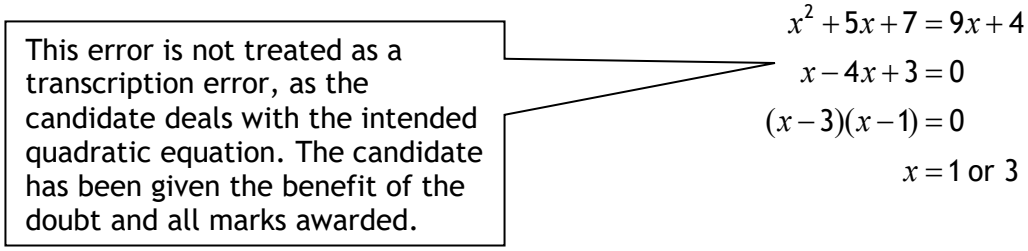

(i) Horizontal/vertical marking

If a question results in two pairs of solutions, apply the following technique, but only if indicated in the detailed marking instructions for the question.

Example:

	$\bullet^5$	$\bullet^6$
$\bullet^5$	$x = 2$	$x = -4$
$\bullet^6$	$y = 5$	$y = -7$

Horizontal: $\bullet^5$ $x = 2$ and $x = -4$ Vertical: $\bullet^5$ $x = 2$ and $y = 5$

$\bullet^6$ $y = 5$ and $y = -7$ $\bullet^6$ $x = -4$ and $y = -7$

You must choose whichever method benefits the candidate, **not** a combination of both.

(j) In final answers, candidates should simplify numerical values as far as possible unless specifically mentioned in the detailed marking instruction. For example

$\frac{15}{12}$ must be simplified to $\frac{5}{4}$ or $1\frac{1}{4}$ $\frac{43}{1}$ must be simplified to 43

$\frac{15}{0{\cdot}3}$ must be simplified to 50 $\frac{4/5}{3}$ must be simplified to $\frac{4}{15}$

$\sqrt{64}$ must be simplified to 8*****

*The square root of perfect squares up to and including 144 must be known.

(k) Commonly Observed Responses (COR) are shown in the marking instructions to help mark common and/or non-routine solutions. CORs may also be used as a guide when marking similar non-routine candidate responses.

(l) Do not penalise candidates for any of the following, unless specifically mentioned in the detailed marking instructions:

- working subsequent to a correct answer
- correct working in the wrong part of a question
- legitimate variations in numerical answers/algebraic expressions, for example angles in degrees rounded to nearest degree
- omission of units
- bad form (bad form only becomes bad form if subsequent working is correct), for example

  $(x^3+2x^2+3x+2)(2x+1)$ written as

  $(x^3+2x^2+3x+2)\times 2x+1$

  $=2x^4+5x^3+8x^2+7x+2$

  gains full credit

- repeated error within a question, but not between questions or papers

(m) In any 'Show that…' question, where candidates have to arrive at a required result, the last mark is not awarded as a follow-through from a previous error, unless specified in the detailed marking instructions.

(n) You must check all working carefully, even where a fundamental misunderstanding is apparent early in a candidate's response. You may still be able to award marks later in the question so you must refer continually to the marking instructions. The appearance of the correct answer does not necessarily indicate that you can award all the available marks to a candidate.

(o) You should mark legible scored-out working that has not been replaced. However, if the scored-out working has been replaced, you must only mark the replacement working.

(p) If candidates make multiple attempts using the same strategy and do not identify their final answer, mark all attempts and award the lowest mark. If candidates try different valid strategies, apply the above rule to attempts within each strategy and then award the highest mark.

For example:

Strategy 1 attempt 1 is worth 3 marks.	Strategy 2 attempt 1 is worth 1 mark.
Strategy 1 attempt 2 is worth 4 marks.	Strategy 2 attempt 2 is worth 5 marks.
From the attempts using strategy 1, the resultant mark would be 3.	From the attempts using strategy 2, the resultant mark would be 1.

In this case, award 3 marks.

Marking Instructions for each question

Question	Generic scheme	Illustrative scheme	Max mark
1.	$\bullet^1$ Strategy: know how to calculate percentage increase $\bullet^2$ Strategy: identify power or equivalent $\bullet^3$ Strategy/process: use valid strategy to calculate expected number of pupils $\bullet^4$ Process/communication: round to 3 significant figures	$\bullet^1$ evidence of 1.053 or equivalent $\bullet^2$ …^{4} or equivalent $\bullet^3$ 1475… $\bullet^4$ 1480	**4**

Notes:

1. Correct answer without working award 0/4
2. $\bullet^3$ can only be awarded for a calculation involving a multiplication and a power or equivalent.
3. Candidates using repeated addition must work to a minimum of 4 significant figures, rounded or truncated, to gain $\bullet^3$.
4. Where all calculations are shown, $\bullet^3$ can be implied by $\bullet^4$.

Commonly Observed Responses:

1. $1475.3 \rightarrow 1480$ with no other working shown award 4/4 ✓✓✓✓
2. $1200 \times 1.053^4 = 1480$ with no unrounded answer award 4/4 ✓✓✓✓
3. $1200 \times 1.053^4 = 1470$ with no unrounded answer award 3/4 ✓✓✓×
4. 1475.3… award 3/4 ✓✓✓×
5. $1200 \div 1.053^4 = 976.04\ldots \rightarrow 976$ award 3/4 ✓✓×✓
6. $1200 \times 0.947^4 = 965.11\ldots \rightarrow 965$ award 3/4 ×✓✓✓
7. $1200 \times 5.3^4 = 946857.7\ldots \rightarrow 947000$ award 3/4 ×✓✓✓
8. $1200 + \left(0.053^4 \times 1200\right) = 1200.0\ldots \rightarrow 1200$ award 2/4 ×✓✓×
9. $1200 \div 0.947^4 = 1492 \rightarrow 1490$ award 2/4 ×✓×✓
10. $1200 + \left(0.053 \times 1200\right) \times 4 = 1454.4 \rightarrow 1450$ award 2/4 ✓××✓

Question			Generic scheme	Illustrative scheme	Max mark
2.	(a)		•[1] Strategy: substitute into sphere formula •[2] Process: calculate the volume of a snooker ball including units	•[1] $\frac{4}{3}\times\pi\times 2.6^3$ •[2] 73.62… cm^3	**2**

Notes:

1. Correct answer without working — award 2/2
2. •[2] is only available for a calculation involving a fraction, a power and π.

Commonly Observed Responses:

1. $\frac{4}{3}\times 3.14\times 2.6^3 \rightarrow 73.58\ldots cm^3$ — award 2/2 ✓✓
2. $\frac{4}{3}\times\pi\times 5.2^3 = 588.97\ldots cm^3$ — award 1/2 ×✓
3. $\frac{4}{3}\times\pi\times 2.6^2 = 28.31\ldots cm^3$ — award 1/2 ×✓
4. $\frac{3}{4}\times\pi\times 2.6^3 \rightarrow 41.41\ldots cm^3$ — award 1/2 ×✓
5. $\frac{4}{3}\times\pi\times 2.6 \rightarrow 10.89\ldots cm^3$ — award 0/2××

	(b)		•[3] Process: calculate the density of a snooker ball	•[3] 1.92… (grams per cubic centimetre)	**1**

Notes:

Commonly Observed Responses:

1. $\frac{142}{74} = 1.91\ldots$ — award 1/1 ✓
2. 2, with no working — award 1/1 ✓

Question			Generic scheme	Illustrative scheme	Max mark
3.			$\bullet^1$ Process: calculate total number of balls remaining, or number of balls less than 8 remaining $\bullet^2$ Process/communication: calculate other value and state probability	$\bullet^1$ 43 or 5 $\bullet^2$ $\frac{5}{43}$	**2**

Notes:

1. $\bullet^2$ is not available for an answer expressed as a ratio.

Commonly Observed Responses:

1. $\frac{5}{43} \rightarrow 0.116\ldots$ award 2/2 ✓✓
2. $\frac{7}{49}$ award 0/2 ××

Question			Generic scheme	Illustrative scheme	Max mark
4.			$\bullet^1$ Process: calculate the area of the circle	$\bullet^1$ 50.265…	**4**
			$\bullet^2$ Process: calculate the dimensions of triangles or diagonals of rhombus	$\bullet^2$ 7 or 14 and 9 or 18	
			$\bullet^3$ Process: calculate the total area	$\bullet^3$ 126	
			$\bullet^4$ Process: calculate the area of the patio	$\bullet^4$ 75.734…	

Notes:

1. Correct answer without working award 0/4
2. Do not penalise candidates who truncate or round to the nearest whole number.
3. $\bullet^1$ and $\bullet^4$ are not available when a candidate does not use πr^2.
4. $\bullet^4$ is only available when a candidate has subtracted an area from an area.
5. When a candidate uses Pythagoras to calculate the area $\bullet^3$ and $\bullet^4$ are unavailable with the exception of COR 2.
6. $\bullet^4$ is not available when a candidate's calculated total area is less than their calculated circle area.
7. Accept use of π to at least 2 decimal places.

Commonly Observed Responses:

1. $50.265\ldots \rightarrow$ dimensions of 14 and 18 $\rightarrow 14\times 18-50.265=201.73\ldots$ award 3/4 ✓✓×✓
2. $50.265\ldots \rightarrow \sqrt{9^2+7^2}=11.4\ldots \rightarrow 11.4\ldots^2-50.265\ldots=79.7\ldots$ award 3/4 ✓✓×✓
3. $50.265\ldots \rightarrow \sqrt{9^2+7^2}=11.4\ldots \rightarrow 50.265\ldots-11.4\ldots=38.86\ldots$ award 2/4 ✓✓××
4. $50.265\ldots \rightarrow$ dimensions of 3 and 5 $\rightarrow 30 \rightarrow (50.265-30=)20.265\ldots$ award 2/4 ✓×✓×

Question			Generic scheme	Illustrative scheme	Max mark
5.	(a)		$\bullet^1$ Strategy/process: calculate amount taxed at 12% $\bullet^2$ Process: calculate national insurance	$\bullet^1$ 23 086 $\bullet^2$ 2770.32	**2**

Notes:

1. Correct answer without working award 2/2
2. Where final answer is not a whole number $\bullet^2$ is only available where final answer is rounded or truncated to 2 decimal places.
3. If 50 284 or 2% is used in any calculation $\bullet^2$ is not available.
4. If 35 670 is not used in any calculation award 0/2
5. Do not penalise candidates who subtract their National Insurance calculation from the annual salary.

Commonly Observed Responses:

1. 88% of $23\,086 \rightarrow 20\,315.68$ award 1/2 ✓×
2. 12% of $35\,670 \rightarrow 4280.40$ award 1/2 ×✓
3. 12% of $(50\,284 - 12\,584) \rightarrow 4524$ award 0/2 ××
4. 12% of $9568 \rightarrow 1148.16$ award 0/2 ××

	(b)		$\bullet^3$ Process: calculate pension contribution $\bullet^4$ Process: calculate weekly salary	$\bullet^3$ 3352.98 $\bullet^4$ 491.39	**2**

Notes:

1. Correct answer without working award 2/2
2. $\bullet^3$ is only available for 3352.98 or 32 317.02.
3. Where final answer is not a whole number $\bullet^4$ is only available where final answer is rounded or truncated to 2 decimal places.
4. $\bullet^4$ must include a subtraction of a calculated National Insurance, 3994.42 and a third value from annual salary and a division by 52.

Commonly Observed Responses:

1. From COR 2 in (a) $35\,670 - (4280.40 + 3994.42 + 3352.98) = 24\,042.20 \rightarrow 462.35$ award 2/2 ✓✓
2. 25 552.28 award 1/2 ✓×
3. $(35\,670 - (3352.98 + 3994.42)) \div 52 \rightarrow 544.66$ or 544.67 award 1/2 ✓×

Question			Generic scheme	Illustrative scheme	Max mark
6.			$\bullet^1$ Strategy/communication: substitute into Pythagoras' theorem	$\bullet^1$ $600^2 - 500^2$	**4**
			$\bullet^2$ Process: calculate distance from Harbour to position 1	$\bullet^2$ 331.66…	
			$\bullet^3$ Strategy/communication: substitute into Pythagoras' theorem	$\bullet^3$ $500^2 + 731.66^2$	
			$\bullet^4$ Process: calculate the distance from lighthouse to position 2	$\bullet^4$ 886.18…	

Notes:

1. Correct answer without working — award 0/4
2. $\bullet^1$ is not available if a candidate writes $500^2 - 600^2$.
3. $\bullet^2$ is available if a candidate writes $500^2 - 600^2 \rightarrow 331.66\ldots$.
4. Do not penalise candidates who truncate, or round to the nearest whole number throughout.

Commonly Observed Responses:

1. $600^2 + 500^2 \rightarrow 781.0\ldots \rightarrow 500^2 + 1181.0\ldots^2 \rightarrow 1282.5\ldots$ — award 3/4 ×✓✓✓
2. $600^2 - 500^2 \rightarrow 331.6\ldots \rightarrow 731.6\ldots^2 - 500^2 \rightarrow 534.1\ldots$ — award 3/4 ✓✓×✓
3. $\sqrt{600^2 - 500^2} = 331.6\ldots$ and $\sqrt{600^2 + 400^2} = 721.1$ — award 2/4 ✓✓××
4. $600^2 + 500^2 \rightarrow 781.0\ldots \rightarrow 1181.0\ldots^2 - 500^2 \rightarrow 1069.9\ldots$ — award 2/4 ×✓×✓
5. $600^2 + 400^2 \rightarrow 721.1\ldots$ — award 1/4 ×✓××
6. $400^2 + 500^2 \rightarrow 640.3\ldots$ — award 1/4 ×✓××

Question			Generic scheme	Illustrative scheme	Max mark
7.	(a)		•1 Process: calculate total paid	•1 $(1.015\times 85\,800+250=)87\,337$	**1**
Notes:					
Commonly Observed Responses:					
	(b)		•2 Process: calculate cost for shop A •3 Process: calculate cost for shop B •4 Process/communication: calculate cost for shop C and state conclusion consistent with working	•2 780 •3 806.40 •4 792 and 780 or Shop A	**3**
Notes: 1. Where a candidate only considers shop C award 0/3 2. For •3 do not penalise candidates who round or truncate to a whole number of pounds within the calculation or omit the trailing zero. 3. •4 is only available if a candidate considers 3 calculated cost, see COR 1. 4. Where cheapest value is not a whole number •4 is only available where cheapest value is rounded or truncated to 2 decimal places.					
Commonly Observed Responses: 1. Shop A: 780, Shop B: 345.60, Shop C: 792 leading to 345.60 or Shop B award 1/3 ✓××					
	(c)	(i)	•5 Strategy/communication: any 5 tasks and times in the correct boxes •6 Strategy/Communication: complete diagram	•5&6 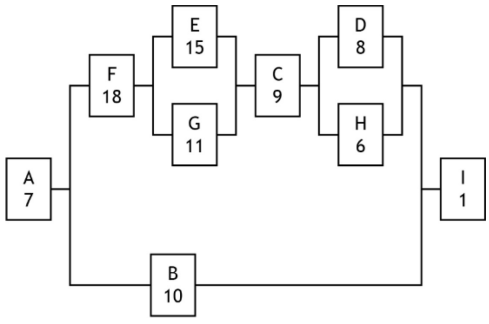	**2**
Notes: 1. If a candidate omits any numbers, all tasks must be correct to be awarded 1/2. 2. If a candidate omits letters, all times must be correct to be awarded 1/2. 3. E and G are interchangeable. 4. D and H are interchangeable.					
Commonly Observed Responses:					

Question			Generic scheme	Illustrative scheme	Max mark
7.	(c)	(ii)	$\bullet^7$ Strategy: select critical path $\bullet^8$ Process: state time consistent with path chosen	$\bullet^7$ $7+18+15+9+8+1$ $\bullet^8$ 58	**2**

Notes:

1. Correct answer with no working — award 2/2
2. $\bullet^8$ is only available for any complete path through the diagram.

Commonly Observed Responses:

1. $(7+10+1=)18$ — award 1/2 ×✓
2. $(7+18+15+9+6+1=)56$ — award 1/2 ×✓
3. $(7+18+11+9+8+1=)54$ — award 1/2 ×✓
4. $(7+18+11+9+6+1=)52$ — award 1/2 ×✓
5. $(7+18+15+9+8+1+10=)68$ — award 0/2 ××
6. $(7+10+9+8+15+18+11+6+1=)85$ — award 0/2 ××

	(d)		$\bullet^9$ Process: divide by 5 or multiply by 3 $\bullet^{10}$ Process: calculate time for 5 workers $\bullet^{11}$ Communication: state date work finishes	$\bullet^9$ 2 or 30 $\bullet^{10}$ 6 $\bullet^{11}$ (Monday) 9 October	**3**

Notes:

1. Correct answer without working — award 0/3
2. Only $\bullet^{10}$ and $\bullet^{11}$ are available for candidates who write **both** $(10\div3=)3.33\ldots$ and $(10\div5=)2$.
3. Only $\bullet^{11}$ is available if candidates use direct proportion, see COR 4.
4. $\bullet^{11}$ is not available if the calculated number of days is 5 or fewer.
5. For $\bullet^{11}$ when the day of the week is stated it **must** be consistent with the date.

Commonly Observed Responses:

1. $(10\div5=)2\rightarrow(10-2-2=)6\rightarrow$ 9 October — award 3/3 ✓✓✓
2. $30\rightarrow(30\div2=)15\rightarrow$ 20 October — award 2/3 ✓×✓
3. $30\rightarrow(30\times5=)150\rightarrow$ 26 or 27 April — award 2/3 ✓×✓
4. $10\div3\times5\rightarrow16.66\ldots\rightarrow$ 24 October — award 1/3 ××✓
5. $(10\div3=)3.33\ldots\rightarrow(10-3.33\ldots-3.33\ldots=)3.33\ldots\rightarrow$ 5 October — award 0/3 ×××

Question			Generic scheme	Illustrative scheme	Max mark
8.	(a)	(i)	•[1] Process: calculate mean	•[1] 39	**1**
		(ii)	Method 1 •[2] Process: calculate $\left(x-\bar{x}\right)^2$ •[3] Strategy/process: substitute into formula •[4] Process: calculate standard deviation	•[2] 25, 256, 49, 0, 16, 169, 25 •[3] $\sqrt{\frac{540}{7-1}}$ •[4] 9.48…	**3**
			Method 2 •[2] Process: calculate $\sum x$ and $\sum x^2$ •[3] Strategy/process: substitute into formula •[4] Process: calculate standard deviation	•[2] 273, 11187 •[3] $\sqrt{\frac{11187-\frac{273^2}{7}}{7-1}}$ •[4] 9.48…	

Notes:

1. Correct answer without working award 0/3
2. Do not accept rounding or truncating to the nearest whole number for final answer.
3. For •[3] do not penalise a square root sign that does not extend to the denominator.
4. •[4] can only be awarded for a calculation involving at least 2 steps including a division followed by a square root.

Commonly Observed Responses:

1. $\frac{\sqrt{540}}{6} \rightarrow 3.872\ldots$ award 2/3 ✓✓×
2. $\sqrt{\frac{540}{6}} \rightarrow \sqrt{9.48\ldots}$ award 2/3 ✓✓×
3. $\sqrt{\frac{540}{7}} \rightarrow 8.783\ldots$ award 2/3 ✓×✓
4. $\sqrt{\frac{540}{39-1}} \rightarrow 3.769\ldots$ award 2/3 ✓×✓
5. $\frac{540}{6} \rightarrow 90$ award 1/3 ✓××

Question			Generic scheme	Illustrative scheme	Max mark
8.	(b)		•^{5} Communication: comment regarding mean •^{6} Communication: comment regarding standard deviation	•^{5} eg, on average the number of visitors to the Aberdeen shop on a Sunday was greater. •^{6} eg, the number of visitors to the Aberdeen shop was more consistent.	**2**

Notes:

1. Answer must be consistent with answer to part (a).
2. Numerical comparisons are not required but when used they must be accurate.
3. For the award of •^{5}

   Accept eg
   a) On average there were more visitors in Aberdeen.
   b) The average number of people was lower in Stirling.
   c) Stirling had lower average customers.
   d) On average Aberdeen was busier.
   e) On average the Aberdeen shop is more popular.

   Do not accept eg
   f) Aberdeen had **overall** higher visitors.
   g) On average Stirling is lower.
   h) On average the **mean** number of visitors in Aberdeen was higher.
   i) On average the number of customers in Aberdeen was **better**.

4. For the award of •^{6}

   Accept eg
   a) The number of visitors in the Stirling shop was more varied.
   b) The visitors to the Stirling shop were more spread out.
   c) There is less variation in the number of visitors in Aberdeen.
   d) The spread of the number of visitors was higher for Stirling.
   e) The customers in Aberdeen were more consistent.

   Do not accept eg
   f) **"On average"** contained in any statement.
   g) The **numbers** in Stirling are more varied.
   h) The **standard deviation** in Aberdeen was more consistent.
   i) The **range** of customers in Stirling was higher.
   j) The Aberdeen shop is more consistent.

Commonly Observed Responses:

1. On average the number of customers in Aberdeen was higher and the **number of customers** was more consistent. award 2/2 ✓✓
2. On average the number of customers in Aberdeen was higher and more consistent. award 1/2 ✓×

Question			Generic scheme	Illustrative scheme	Max mark
8.	(c)		•^{7} Process: calculate one share •^{8} Process: calculate the total number of bathrooms purchased	•^{7} 43 •^{8} 387	**2**

Notes:

1. Correct answer without working award 2/2
2. For commonly observed answers illustrated below, 19·… multiplied by 3, 4 or 2 •^{8} can be awarded.
3. Where the candidate attempts more than one COR all calculations must be correct for •^{8} to be awarded.
4. •^{7} cannot be awarded if the candidate has also calculated $172\div3$ and/or $172\div2$ and/or $172\div9$.

Commonly Observed Responses:

1. $172\div9\times3\rightarrow57\cdot\ldots$ award 1/2 ×✓
2. $172\div9\times4\rightarrow76\cdot\ldots$ award 1/2 ×✓
3. $172\div9\times2\rightarrow38\cdot\ldots$ award 1/2 ×✓

	(d)		•^{9} Process: calculate deposit •^{10} Process: calculate total cost of payment plan •^{11} Process/communication: calculate the cost of 1 monthly instalment	•^{9} 837.50 •^{10} 7025 •^{11} 123.75	**3**

Notes:

1. Correct answer without working award 3/3
2. Where the final answer is not a whole number, •^{11} is only available where final answer is rounded or truncated to 2 decimal places.
3. For •$^{9\ \&\ 10}$ do not penalise candidates who omit the trailing zero.
4. •^{10} can be implied by a candidate who states 6187.50.
5. •^{11} can only be awarded for a calculation involving subtracting a calculated deposit and a division by 50.

Commonly Observed Responses:

1. $(12.5\%\text{ of }7025=)878.12\ldots\rightarrow6146.87\ldots\rightarrow122.93\text{ or }122.94$ award 2/3 ×✓✓
2. $837.50\rightarrow(7025+837.50=)7862.50\rightarrow157.25$ award 2/3 ✓✓×
3. $837.50\rightarrow(6700-837.50=)5862.5\rightarrow117.25$ award 2/3 ✓×✓
4. $(837.50+325=)1162.5\rightarrow23.25$ award 1/3 ✓××
5. $837.50\div50=16.75$ award 1/3 ✓××
6. $7025\div50=140.50$ award 1/3 ×✓×
7. $6700\div50=134$ award 0/3 ×××

Question			Generic scheme	Illustrative scheme	Max mark
9.	(a)		$\bullet^1$ Strategy/process: convert dollars into pounds $\bullet^2$ Process: convert pounds into euros	$\bullet^1$ 76.92… $\bullet^2$ 85.38	**2**

Notes:

1. Correct answer without working award 2/2
2. $\bullet^1$ can be rounded or truncated to a whole number or any number of decimal places.
3. $\bullet^2$ must be rounded or truncated to the nearest cent, 10 cents or euro
   eg 85.38 rounded to 85.40 or 85.4 .
4. Do not penalise the wrong units in the final answer.

Commonly Observed Responses:

1. $100 \div 1.3 \div 1.11 = 69.29$ or 69.30 award 1/2 ✓×
2. $100 \times 1.30 \div 1.11 = 117.11$ or 117.12 award 1/2 ×✓
3. $100 \times 1.3 \times 1.11 = 144.30$ award 1/2 ×✓
4. $100 \times 1.11 = 111$ award 0/2 ××

	(b)		$\bullet^3$ Process: calculate normal pay $\bullet^4$ Process: calculate overtime hours $\bullet^5$ Process: calculate total pay	$\bullet^3$ 480 $\bullet^4$ 10 $\bullet^5$ 672	**3**

Notes:

1. Correct answer without working award 3/3
2. $\bullet^5$ is only available for a calculation involving the candidate's answer to $\bullet^4$ multiplied by 12.8 and by 1.5, added to the candidate's answer to $\bullet^3$ with the exception of COR 2.
3. Where answer is not a whole number $\bullet^5$ is only available where final answer is rounded or truncated to 2 decimal places.

Commonly Observed Responses:

1. $47.5 \times 12.80 = 608$ award 1/3 ✓××
2. $47.5 \times 12.80 \times 1.5 = 912$ award 1/3 ××✓
3. $480 + (47.5 \times 12.80 \times 1.5) = 1392$ award 1/3 ✓××

Question			Generic scheme	Illustrative scheme	Max mark
9.	(c)		•[6] Process: calculate number of gallons •[7] Process: calculate number of litres •[8] Process: calculate total cost of Manchester option •[9] Process/communication: calculate total for Edinburgh and state consistent conclusion	•[6] $(492 \div 48 =) 10.25$ •[7] $(10.25 \times 4.545 =) 46.58\ldots$ •[8] $(46.58\ldots \times 1.42 + 152 + 49 =) 267.15$ •[9] 270.50, Manchester is cheaper	**4**

Notes:

1. Correct answer without working award 0/4
2. •[6] is also available for 11 gallons provided there is evidence of a valid strategy.
3. •[7] is also available for 47 litres.
4. •[6] is not available to candidates who round down number of gallons.
5. •[7] is not available to candidates who round down number of litres.
6. •[6&7] are not available for 48×4.545 or $48 \div 4.545$.
7. For •[8] do not penalise candidates who do not round their answer to 2 decimal places.
8. For •[9] do not penalise candidates who omit the trailing zero.

Commonly Observed Responses:

1. $10.25 \rightarrow 4.545 \times 1.42 = 6.4539 \rightarrow (6.45 \times 10.25 + 152 + 49 =) 267.11 \rightarrow 270.50$, Manchester
   award 4/4 ✓✓✓✓
2. 10.25 rounded to 11 gallons $\rightarrow$ 49.995l $\rightarrow$ £70.99 or £71 $\rightarrow$ £272 and £270.50, Edinburgh
   award 4/4 ✓✓✓✓
3. $492 \div 48 = 10.25$ rounded to 10 gallons $\rightarrow 45.45 \times 1.42 = 64.539 \rightarrow$ £265.54 and £270.50, Manchester
   award 3/4 ×✓✓✓
4. $48 \times 4.545 = 218.16 \rightarrow (218.16 \times 1.42 + 152 + 49 =) 510.78\ldots \rightarrow 270.50$, Edinburgh
   award 2/4 ××✓✓
5. $48 \div 4.545 = 10.561\ldots$ rounded to 11 gallons $\rightarrow 11 \times 1.42 = 15.62 \rightarrow$ £216.62 and £270.50, Manchester
   award 2/4 ××✓✓
6. $48 \div 4.545 = 10.561\ldots$ rounded to 11 gallons $\rightarrow$ 49.995l $\rightarrow$ 70.99 or 71 $\rightarrow$ £272 and £270.50, Edinburgh
   award 2/4 ××✓✓

Question			Generic scheme	Illustrative scheme	Max mark
9.	(d)		Method 1 •[10] Process: calculate time of flight in hours •[11] Process: convert time to hours and minutes and add on •[12] Process/communication: calculate local time in Alicante when flight landed	•[10] 2.7 •[11] 14:12 •[12] 15:12 or 3:12 pm	**3**
			Method 2 •[10] Process: calculate local time in Alicante when flight left •[11] Process: calculate time of flight in hours •[12] Process/communication: state time flight landed	•[10] 12:30 or 12:30 pm •[11] 2.7 •[12] 15:12 or 3:12 pm	

Notes:

1. Correct answer without working — award 3/3
2. For •[12] accept 03:12 pm or 15:12 pm.
3. For •[12] do not accept 3:12, 03:12 or 3 hours 12 minutes.

Commonly Observed Responses:

1. $2.7 \rightarrow 2:40$ pm $\rightarrow 3:40$ pm — award 2/3 ✓×✓
2. $2.7 \rightarrow 1:37$ pm $\rightarrow 2:37$ pm — award 2/3 ✓×✓

[END OF MARKING INSTRUCTIONS]