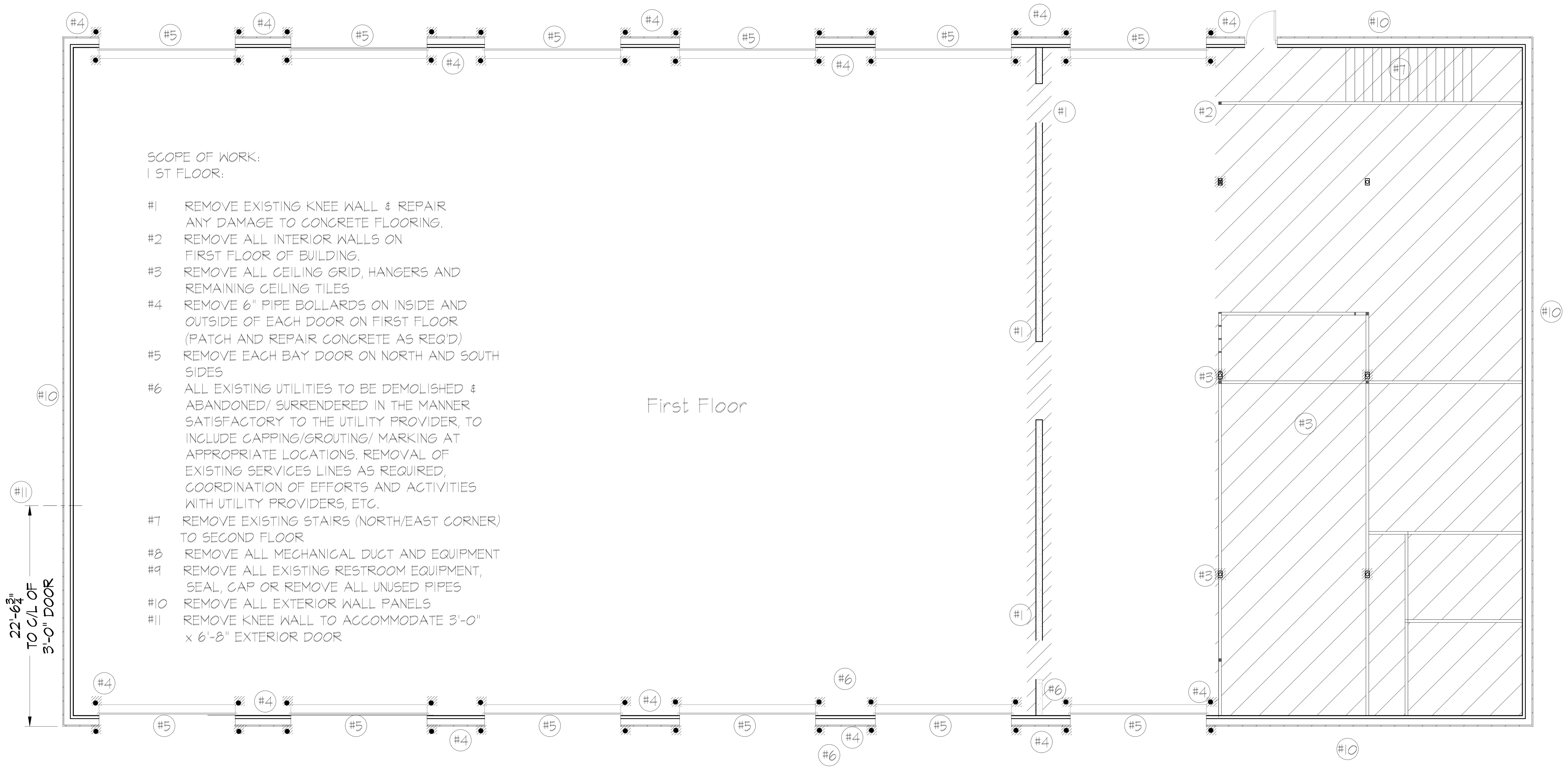

SCOPE OF WORK:
1 ST FLOOR:

#1 REMOVE EXISTING KNEE WALL & REPAIR ANY DAMAGE TO CONCRETE FLOORING.
#2 REMOVE ALL INTERIOR WALLS ON FIRST FLOOR OF BUILDING.
#3 REMOVE ALL CEILING GRID, HANGERS AND REMAINING CEILING TILES
#4 REMOVE 6" PIPE BOLLARDS ON INSIDE AND OUTSIDE OF EACH DOOR ON FIRST FLOOR (PATCH AND REPAIR CONCRETE AS REQ'D)
#5 REMOVE EACH BAY DOOR ON NORTH AND SOUTH SIDES
#6 ALL EXISTING UTILITIES TO BE DEMOLISHED & ABANDONED/ SURRENDERED IN THE MANNER SATISFACTORY TO THE UTILITY PROVIDER, TO INCLUDE CAPPING/GROUTING/ MARKING AT APPROPRIATE LOCATIONS. REMOVAL OF EXISTING SERVICES LINES AS REQUIRED, COORDINATION OF EFFORTS AND ACTIVITIES WITH UTILITY PROVIDERS, ETC.
#7 REMOVE EXISTING STAIRS (NORTH/EAST CORNER) TO SECOND FLOOR
#8 REMOVE ALL MECHANICAL DUCT AND EQUIPMENT
#9 REMOVE ALL EXISTING RESTROOM EQUIPMENT, SEAL, CAP OR REMOVE ALL UNUSED PIPES
#10 REMOVE ALL EXTERIOR WALL PANELS
#11 REMOVE KNEE WALL TO ACCOMMODATE 3'-0" x 6'-8" EXTERIOR DOOR

1 DEMO
SCALE: 1/8" = 1'-0"
RE: -

FOR BIDS
PRINTED: 8/5/25

KING architects INC.
Barry D. King, AIA, Architect
1312 Sampson St.
Westlake, LA 70669
337-494-0806
www.kingarchitects.net

© COPYRIGHT 2024
ALL INFORMATION, EITHER DRAWN, WRITTEN, OR IMPLIED APPEARING IN THIS DOCUMENT SHALL NOT BE DUPLICATED, DISCLOSED, OR OTHERWISE USED WITHOUT THE WRITTEN PERMISSION OF BARRY D. KING AIA. THIS DOCUMENT IS AN INSTRUMENT OF SERVICE AND IS THE SOLE PROPERTY OF THE AUTHOR. FURTHERMORE, THE USE OF THIS DOCUMENT FOR ANY PURPOSE SHALL BE REVOKED, IF THE INTENT OF THE DESIGN OR THE CONSTRUCTION TECHNIQUES OR DETAILS SHOWN HEREIN ARE NOT ADHERED TO OR THE CONTRACTUAL AGREEMENT GOVERNING THEIR USE ARE NOT STRICTLY ADHERED TO.

JOB NO:	2316
DATE:	MAR, 2025
DRWN. BY:	-
CHKD. BY:	BDK

REVISIONS

1	FOR BIDS
2	-
3	-
4	-

BARRY D. KING REG. NO. 3175 STATE OF LOUISIANA REGISTERED ARCHITECT

GREATER ST MARY MISSIONARY BAPTIST
1401 MOELING STREET
LAKE CHARLES, LA 70601
MINISTRY CENTER

FIRST FLOOR DEMO
ALTERNATE #1

MC-D-100

KAI # 2316 / PRINT DATE 8/5/25

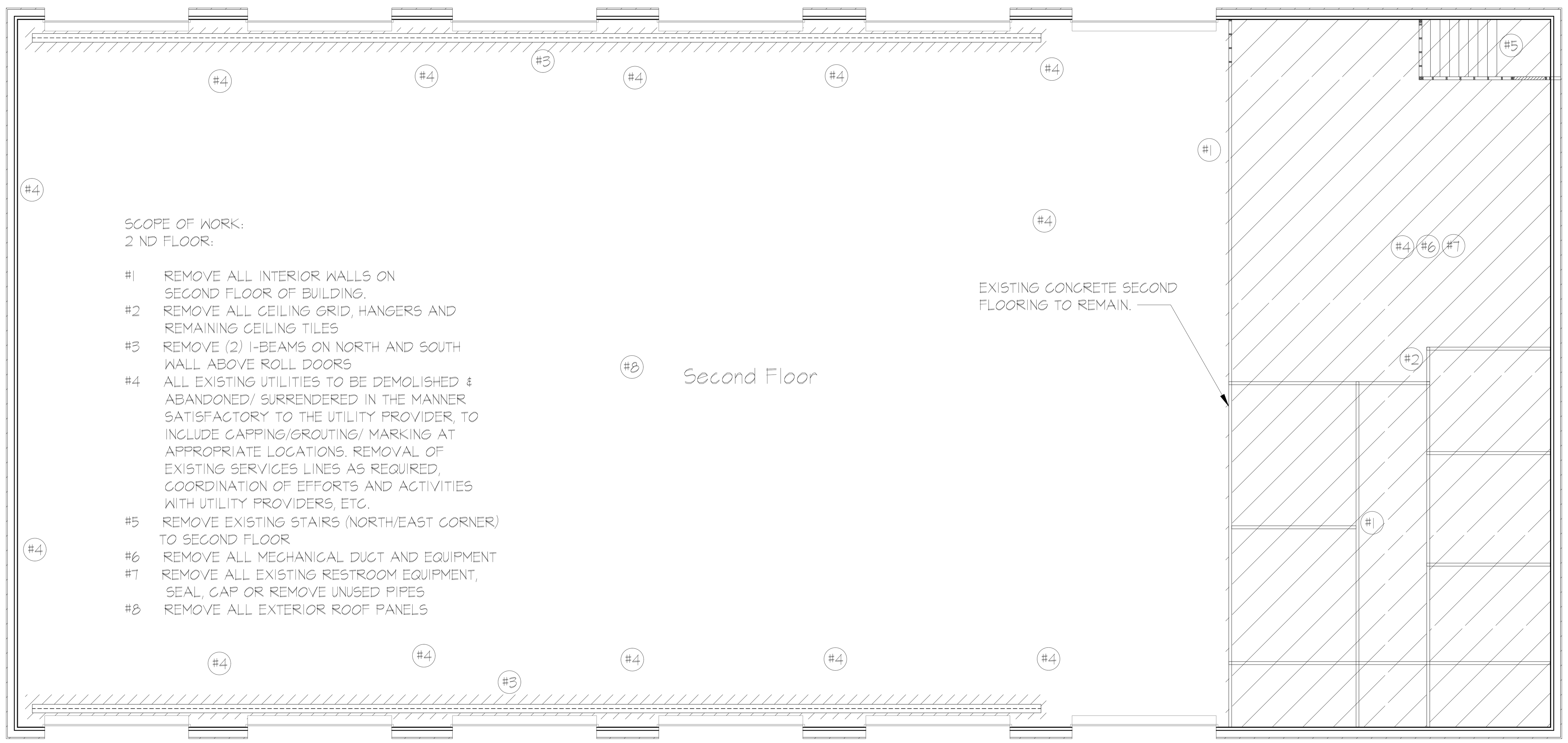

SCOPE OF WORK:
2 ND FLOOR:

#1 REMOVE ALL INTERIOR WALLS ON SECOND FLOOR OF BUILDING.
#2 REMOVE ALL CEILING GRID, HANGERS AND REMAINING CEILING TILES
#3 REMOVE (2) I-BEAMS ON NORTH AND SOUTH WALL ABOVE ROLL DOORS
#4 ALL EXISTING UTILITIES TO BE DEMOLISHED & ABANDONED/ SURRENDERED IN THE MANNER SATISFACTORY TO THE UTILITY PROVIDER, TO INCLUDE CAPPING/GROUTING/ MARKING AT APPROPRIATE LOCATIONS. REMOVAL OF EXISTING SERVICES LINES AS REQUIRED, COORDINATION OF EFFORTS AND ACTIVITIES WITH UTILITY PROVIDERS, ETC.
#5 REMOVE EXISTING STAIRS (NORTH/EAST CORNER) TO SECOND FLOOR
#6 REMOVE ALL MECHANICAL DUCT AND EQUIPMENT
#7 REMOVE ALL EXISTING RESTROOM EQUIPMENT, SEAL, CAP OR REMOVE UNUSED PIPES
#8 REMOVE ALL EXTERIOR ROOF PANELS

1 DEMO 2ND
SCALE: 1/8" = 1'-0"
RE: -

FOR BIDS
PRINTED: 8/4/25

KING architects INC.
Barry D. King, AIA, Architect
1312 Sampson St.
Westlake, LA 70669
337-494-0806
www.kingarchitects.net

© COPYRIGHT 2024
ALL INFORMATION, EITHER DRAWN, WRITTEN, OR IMPLIED APPEARING IN THIS DOCUMENT SHALL NOT BE DUPLICATED, DISCLOSED, OR OTHERWISE USED WITHOUT THE WRITTEN PERMISSION OF BARRY D. KING AIA THIS DOCUMENT IS AN INSTRUMENT OF SERVICE AND IS THE SOLE PROPERTY OF THE AUTHOR. FURTHERMORE, THE USE OF THIS DOCUMENT FOR ANY PURPOSE SHALL BE REVOKED, IF THE INTENT OF THE DESIGN OR THE CONSTRUCTION TECHNIQUES OR DETAILS SHOWN HEREIN ARE NOT ADHERED TO OR THE CONTRACTUAL AGREEMENT GOVERNING THEIR USE ARE NOT STRICTLY ADHERED TO.

JOB NO: 2316
DATE: MAR, 2025
DRWN. BY: -
CHKD. BY: -

REVISIONS
FOR BIDS

BARRY D. KING REG. NO. 3755 STATE OF LOUISIANA REGISTERED ARCHITECT

GREATER ST MARY MISSIONARY BAPTIST
1401 MOELING STREET
LAKE CHARLES, LA 70601
MINISTRY CENTER

DEMO 2ND FLOOR
ALTERNATE #1

MC-D-101
KAI # 2316 / PRINT DATE 8/4/25

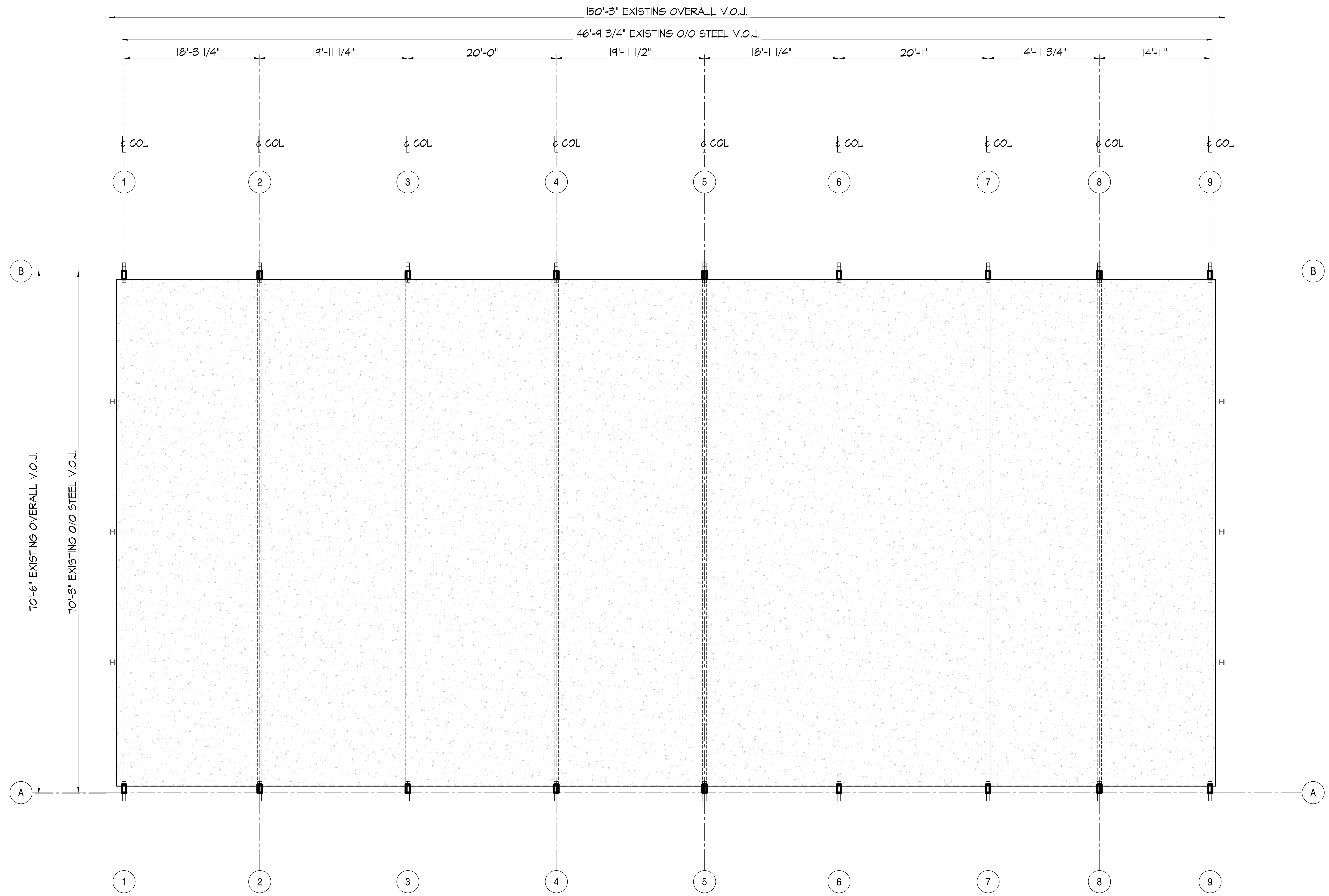

1 FIRST FLOOR PLAN
SCALE: 1/8" = 1'-0"
RE: -

NORTH

CONCRETE FLOOR PREP NOTES.

1. TO PREP THE EXISTING CONCRETE FOUNDATION FOR NEW 2" CONCRETE CAP, THOROUGHLY CLEAN THE SURFACE WITH A PRESSURE WASHER, REMOVE ANY LOOSE DEBRIS, ROUGHEN THE SURFACE USING A GRINDER OR SCABBLER TO CREATE BETTER ADHESION, THEN APPLY A CONCRETE BONDING AGENT BEFORE POURING THE NEW CONCRETE CAP; ENSURE TO ADDRESS ANY SIGNIFICANT CRACKS OR IMPERFECTIONS IN THE EXISTING FOUNDATION BEFOREHAND.
2. POUR 2" CAP WITH FIBERGLASS MESH@ CENTER OF 2". BOTTOM OF CAP TO THICKEN TO MATCH EXISTING CONCRETE SLOPE.
3. EXISTING CATCH BASINS AND PIPE TO BE ABANDONED IN PLACE AS DESCRIBED HERE IN.

FOR BIDS
PRINTED: 8/4/25

KING architects INC.
Barry D. King, AIA,
Architect
1312 Sampson St.
Westlake, LA 70669
337-494-0806
www.kingarchitects.net

© COPYRIGHT 2025
ALL INFORMATION, EITHER DRAWN, WRITTEN, OR IMPLIED APPEARING IN THIS DOCUMENT SHALL NOT BE DUPLICATED, DISCLOSED, OR OTHERWISE USED WITHOUT THE WRITTEN PERMISSION OF BARRY D. KING AIA THIS DOCUMENT IS AN INSTRUMENT OF SERVICE AND IS THE SOLE PROPERTY OF THE AUTHOR. FURTHERMORE, THE USE OF THIS DOCUMENT FOR ANY PURPOSE SHALL BE REVOKED, IF THE INTENT OF THE DESIGN OR THE CONSTRUCTION TECHNIQUES OR DETAILS SHOWN HEREIN ARE NOT ADHERED TO OR THE CONTRACTUAL AGREEMENT GOVERNING THEIR USE ARE NOT STRICTLY ADHERED TO.

JOB NO: 2316
DATE: MAR. 2025
DRWN. BY: -
CHKD. BY: -

REVISIONS

△	FOR BIDS
△	-
△	-
△	-

GREATER ST MARY
MISSIONARY BAPTIST
1401 MOELING STREET
LAKE CHARLES, LA 70601
MINISTRY CENTER

CONCRETE
OVERLAY
ALTERNATE #1

MC-S-100

FRAMING NOTE:
- INSTALL 8" PURLINS AT DOOR OPENINGS TO ACCOMMODATE NEW FLOOR PLAN.

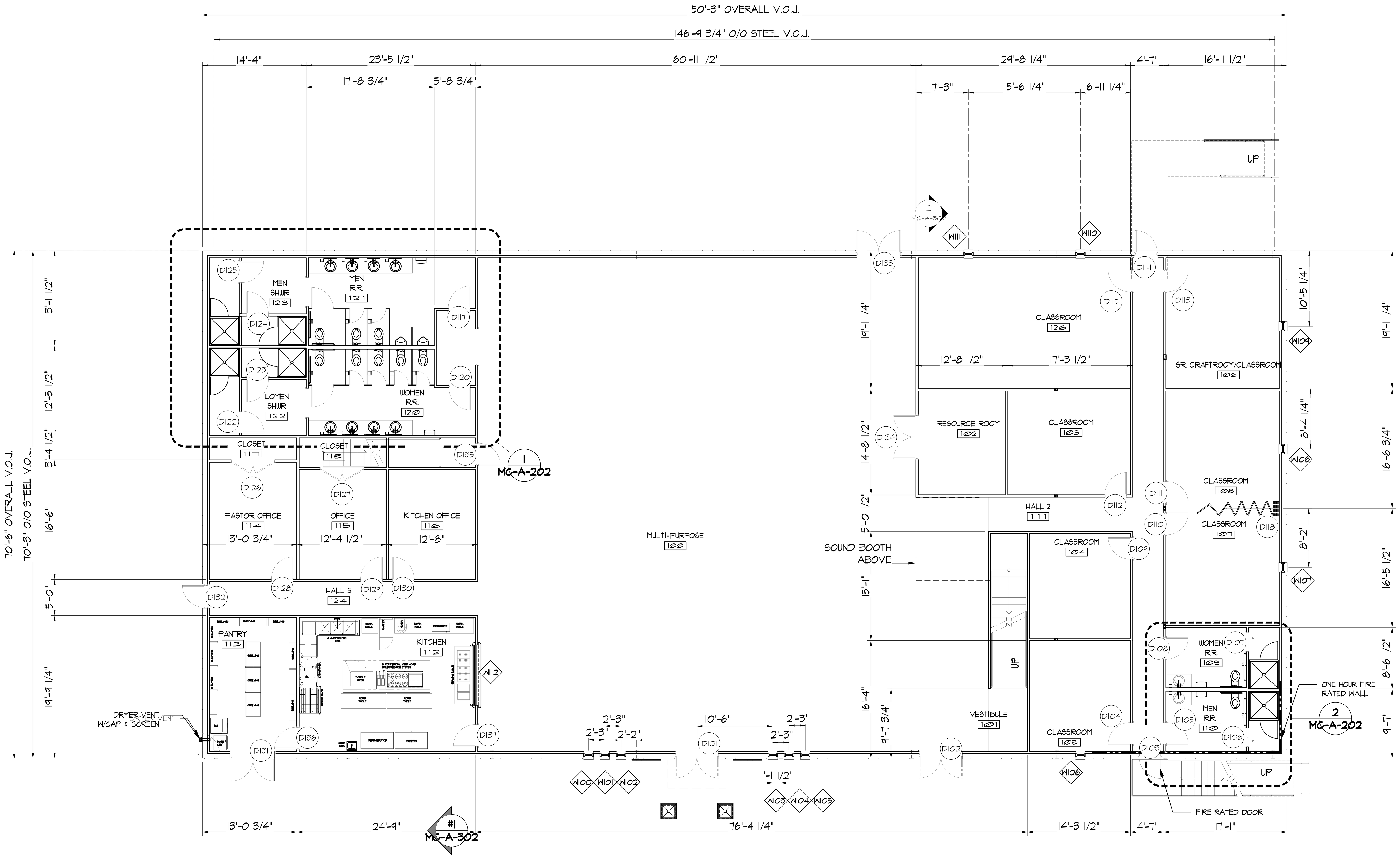

1 FIRST FLOOR PLAN
SCALE: 1/8" = 1'-0"
RE: MC-A-200

NORTH

FOR BIDS
PRINTED: 8/4/25

KING architects INC.
Barry D. King, AIA, Architect
1312 Sampson St.
Westlake, LA 70669
337-494-0806
www.kingarchitects.net

© COPYRIGHT 2025
ALL INFORMATION, EITHER DRAWN, WRITTEN, OR IMPLIED APPEARING IN THIS DOCUMENT SHALL NOT BE DUPLICATED, DISCLOSED, OR OTHERWISE USED WITHOUT THE WRITTEN PERMISSION OF BARRY D. KING AIA. THIS DOCUMENT IS AN INSTRUMENT OF SERVICE AND IS THE SOLE PROPERTY OF THE AUTHOR. FURTHERMORE, THE USE OF THIS DOCUMENT FOR ANY PURPOSE SHALL BE REVOKED, IF THE INTENT OF THE DESIGN OR THE CONSTRUCTION TECHNIQUES OR DETAILS SHOWN HEREIN ARE NOT ADHERED TO OR THE CONTRACTUAL AGREEMENT GOVERNING THEIR USE ARE NOT STRICTLY ADHERED TO.

JOB NO: 2316
DATE: MAR. 2025
DRWN. BY: BDC
CHKD. BY: BDK

REVISIONS
A FOR BIDS

GREATER ST MARY MISSIONARY BAPTIST
LAKE CHARLES, LA 70601
MINISTRY CENTER
MINISTRY BUILDING

FIRST FLOOR PLAN
ALTERNATE #1

MC-A-200

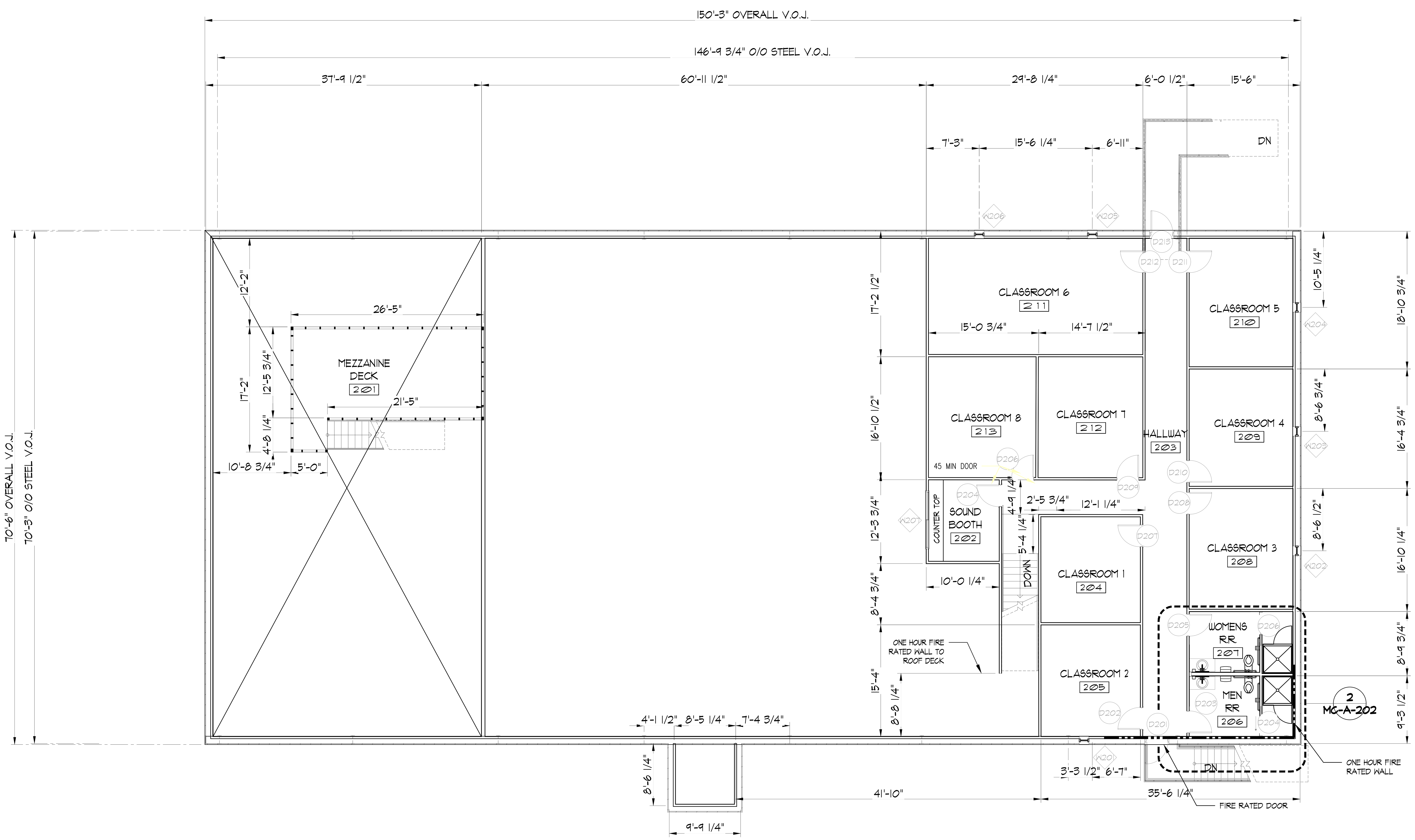

1 SECOND FLOOR PLAN

SCALE: 1/8" = 1'-0"
RE: MC-A-201

NORTH

FOR BIDS

PRINTED: 8/4/25

KING architects INC.

Barry D. King, AIA, Architect
1312 Sampson St.
Westlake, LA 70669
337-494-0806
www.kingarchitects.net

© COPYRIGHT 2024
ALL INFORMATION, EITHER DRAWN, WRITTEN, OR IMPLIED APPEARING IN THIS DOCUMENT SHALL NOT BE DUPLICATED, DISCLOSED, OR OTHERWISE USED WITHOUT THE WRITTEN PERMISSION OF BARRY D. KING AIA. THIS DOCUMENT IS AN INSTRUMENT OF SERVICE AND IS THE SOLE PROPERTY OF THE AUTHOR. FURTHERMORE, THE USE OF THIS DOCUMENT FOR ANY PURPOSE SHALL BE REVOKED, IF THE INTENT OF THE DESIGN OR THE CONSTRUCTION TECHNIQUES OR DETAILS SHOWN HEREIN ARE NOT ADHERED TO OR THE CONTRACTUAL AGREEMENT GOVERNING THEIR USE ARE NOT STRICTLY ADHERED TO.

JOB NO:	2316
DATE:	MAR. 2025
DRWN. BY:	BDC
CHKD. BY:	BDK

REVISIONS

A	FOR BIDS

BARRY D. KING REG. NO. 3755 STATE OF LOUISIANA REGISTERED ARCHITECT

GREATER ST MARY MISSIONARY BAPTIST
LAKE CHARLES, LA 70601
MINISTRY CENTER
MINISTRY BUILDING

SECOND FLOOR PLAN
ALTERNATE #1

MC-A-201

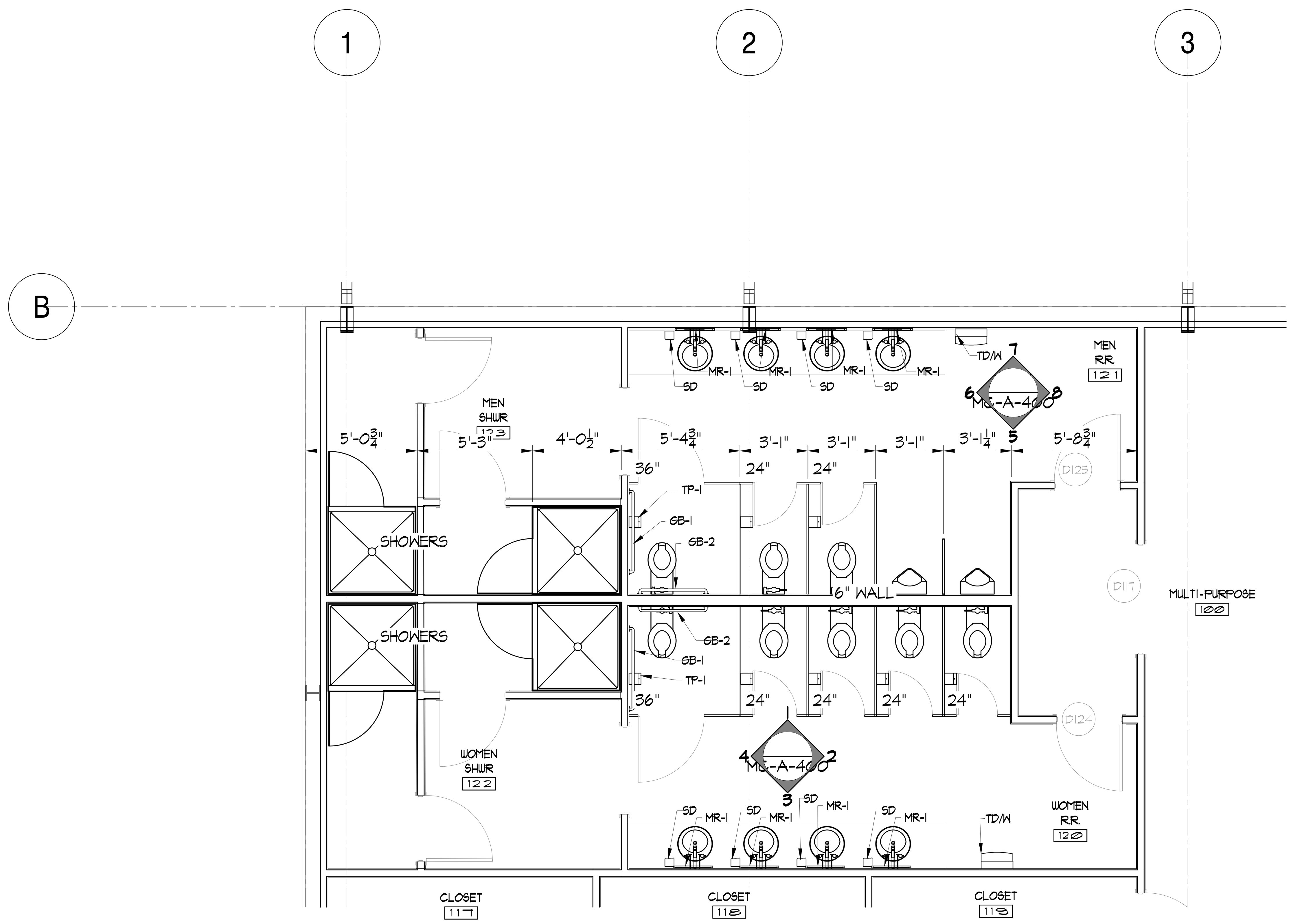

1 ENLARGED RESTROOMS
SCALE: 1/4" = 1'-0"
RE: A-400

NORTH

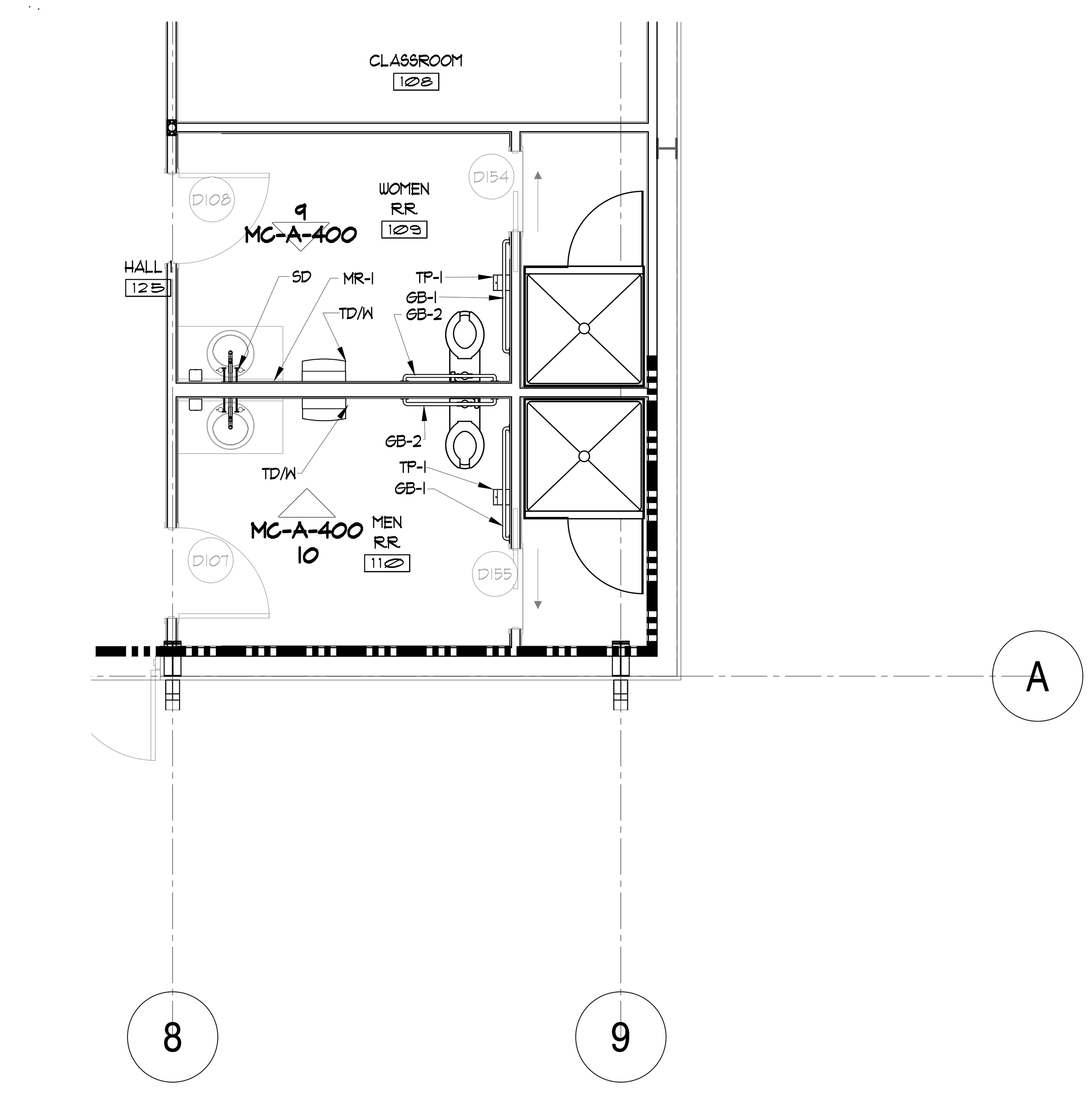

2 ENLARGED CLASSROOM RESTROOMS
SCALE: 1/4" = 1'-0"
RE: A-200, A201, A400

NORTH

SCHEDULE OF TOILET ACCESSORIES

ITEM	QTY	DESCRIPTION
LG-2	10	LAV GUARD
MR-1	8	S.S. FRAMED MIRROR
TP-1	10	TOILET TISSUE (ROLL) DISPENSER
GB-1	4	GRAB BAR 44"
GB-2	4	GRAB BAR 36"
SD	10	SOAP DISPENSER
TD/W	4	TOWEL DISPENSER/WASTE

FOR BIDS
PRINTED: 8/4/25

KING architects INC.
Barry D. King, AIA, Architect
1312 Sampson St.
Westlake, LA 70669
337-494-0806
www.kingarchitects.net

© COPYRIGHT 2024
ALL INFORMATION, EITHER DRAWN, WRITTEN, OR IMPLIED APPEARING IN THIS DOCUMENT SHALL NOT BE DUPLICATED, DISCLOSED, OR OTHERWISE USED WITHOUT THE WRITTEN PERMISSION OF BARRY D. KING AIA THIS DOCUMENT IS AN INSTRUMENT OF SERVICE AND IS THE SOLE PROPERTY OF THE AUTHOR. FURTHERMORE, THE USE OF THIS DOCUMENT FOR ANY PURPOSE SHALL BE REVOKED, IF THE INTENT OF THE DESIGN OR THE CONSTRUCTION TECHNIQUES OR DETAILS SHOWN HEREIN ARE NOT ADHERED TO OR THE CONTRACTUAL AGREEMENT GOVERNING THEIR USE ARE NOT STRICTLY ADHERED TO.

JOB NO: 2316
DATE: MAR. 2025
DRWN. BY: -
CHKD. BY: -

REVISIONS

1	FOR BIDS

BARRY D. KING REG. NO. 3755 STATE OF LOUISIANA REGISTERED ARCHITECT

GREATER ST MARY MISSIONARY BAPTIST
1401 MOELING STREET
LAKE CHARLES, LA 70601
MINISTRY CENTER

ENLARGED PLANS
ALTERNATE #1

MC-A-202
KAI # 2316 / PRINT DATE 8/4/25

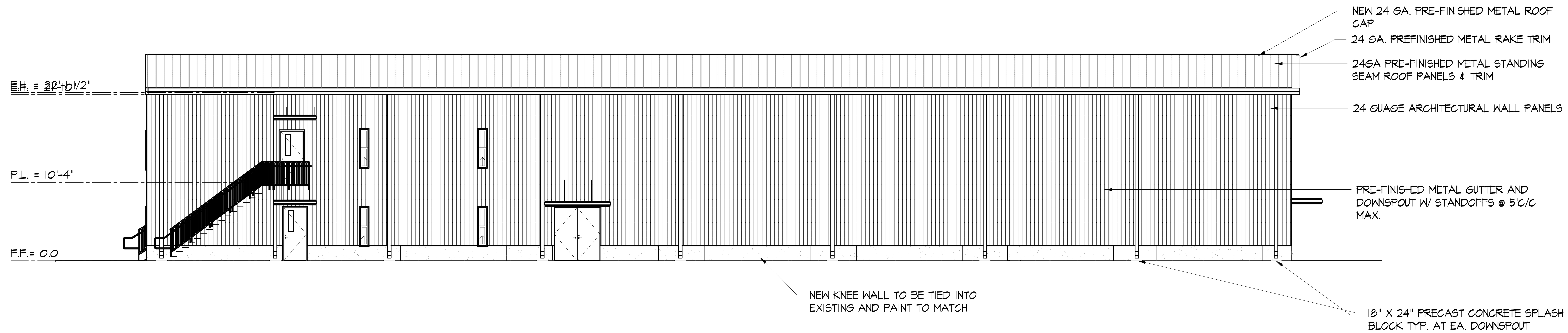

1 NORTH ELEVATION
SCALE:1/8" = 1'-0"
RE: -

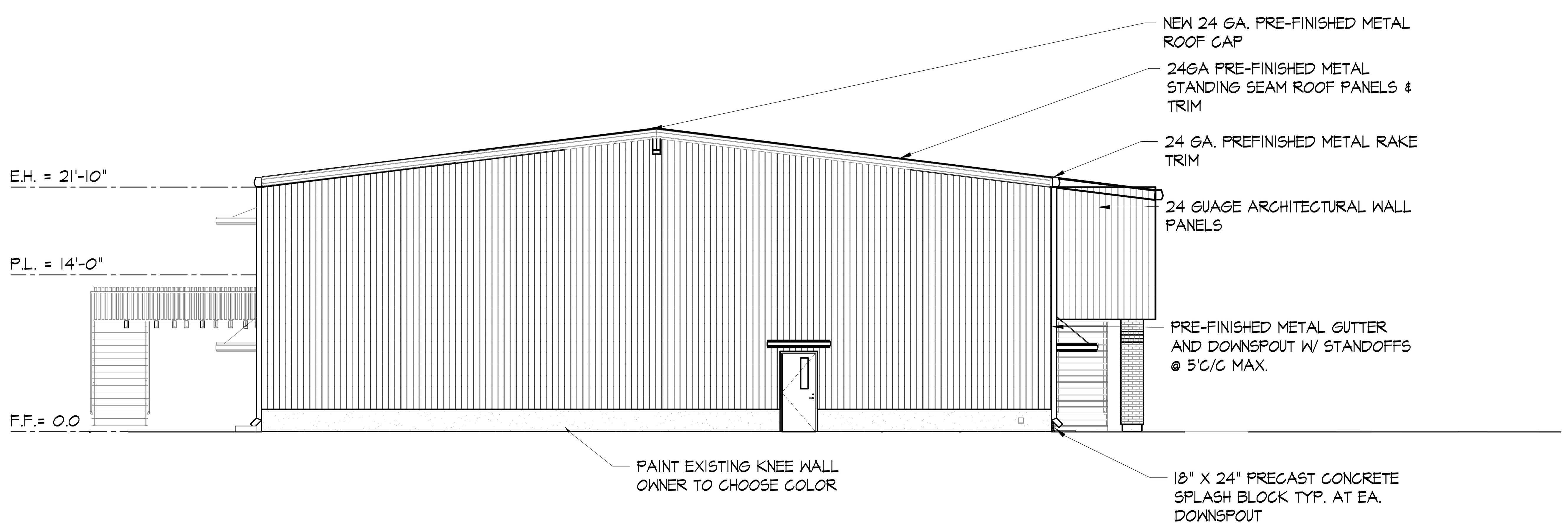

2 WEST ELEVATION
SCALE:1/8" = 1'-0"
RE: -

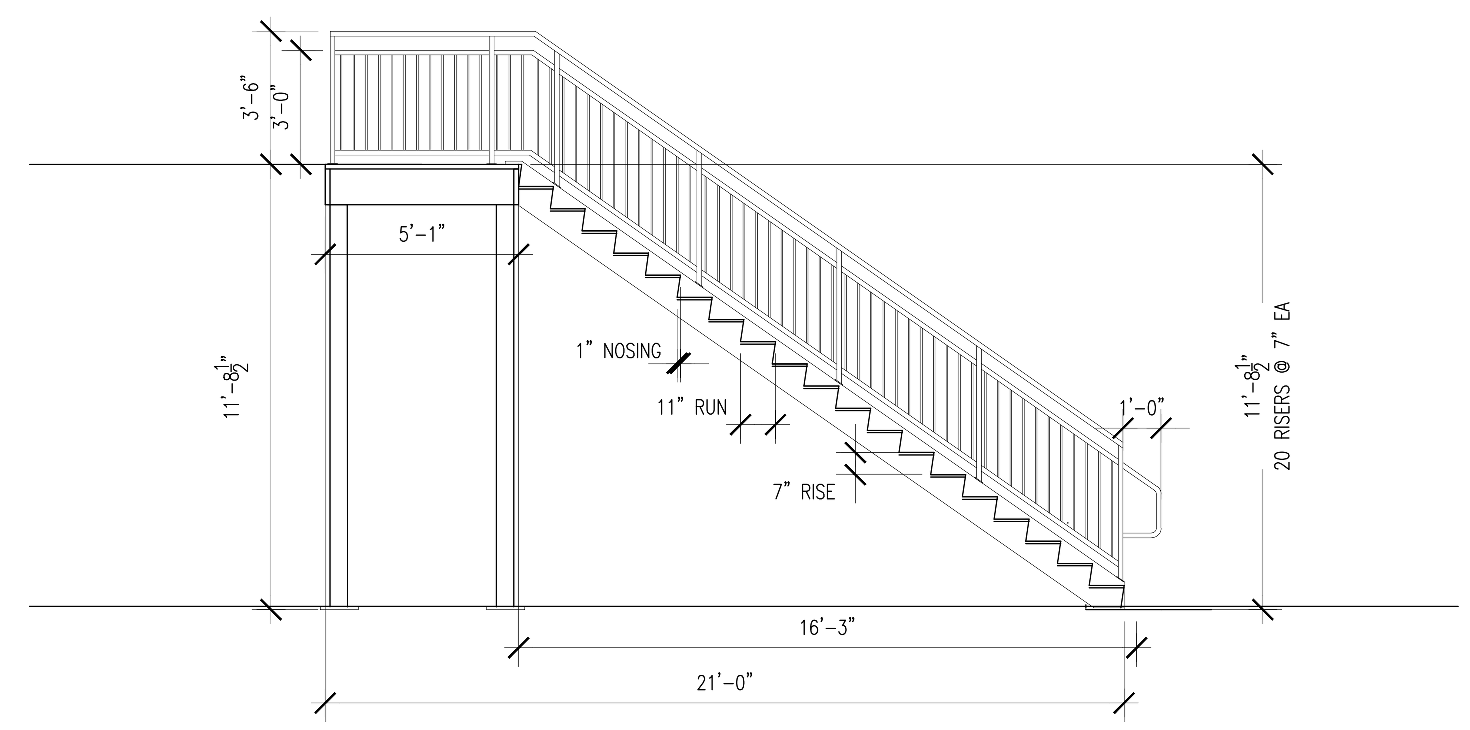

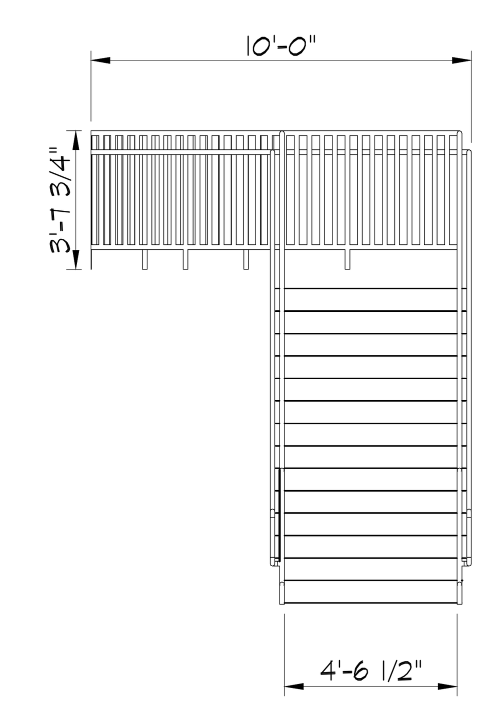

3 STEEL PAN STAIR
SCALE:3/4" = 1'-0"
RE: -

FOR BIDS
PRINTED: 8/5/25

KING architects INC.
Barry D. King, AIA, Architect
1312 Sampson St.
Westlake, LA 70669
337-494-0806
www.kingarchitects.net

© COPYRIGHT 2025
ALL INFORMATION, EITHER DRAWN, WRITTEN OR IMPLIED APPEARING IN THIS DOCUMENT SHALL NOT BE DUPLICATED, DISCLOSED, OR OTHERWISE USED WITHOUT THE WRITTEN PERMISSION OF BARRY D. KING AIA. THIS DOCUMENT IS AN INSTRUMENT OF SERVICE AND IS THE SOLE PROPERTY OF THE AUTHOR. FURTHERMORE, THE USE OF THIS DOCUMENT FOR ANY PURPOSE SHALL BE REVOKED, IF THE INTENT OF THE DESIGN OR THE CONSTRUCTION TECHNIQUES OR DETAILS SHOWN HEREIN ARE NOT ADHERED TO OR THE CONTRACTUAL AGREEMENT GOVERNING THEIR USE ARE NOT STRICTLY ADHERED TO.

JOB NO:	2316
DATE:	MAR, 2025
DRWN. BY:	BDC
CHKD. BY:	BDK

REVISIONS

A	FOR BIDS

BARRY D. KING REG. NO. 3735 STATE OF LOUISIANA REGISTERED ARCHITECT

GREATER ST MARY
MISSIONARY BAPTIST
1401 MOELING STREET
LAKE CHARLES, LA 70601
MINISTRY CENTER

NORTH & WEST ELEVATIONS
ALTERNATE #1

MC-A-300

KAI # 2316 / PRINT DATE 8/5/25

NOTE:
WHERE ROLL DOORS HAVE BEEN REMOVED, CONTRACTOR TO FORM AND POUR NEW CONCRETE KNEE WALL TO MATCH EXISTING. FRAME OPENING ABOVE KNEE WALL WITH NEW PURLINS TO MATCH EXISTING.
ENTIRE CONCRETE KNEE WALL TO BE PREPPED, PRIMED AND PAINTED.

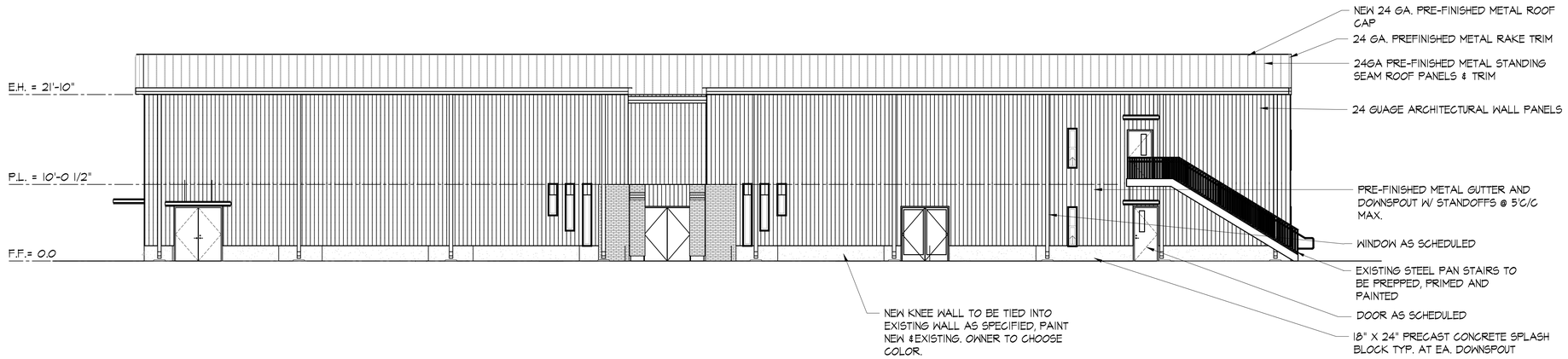

1 SOUTH ELEVATION
SCALE: 1/8" = 1'-0"
RE: -

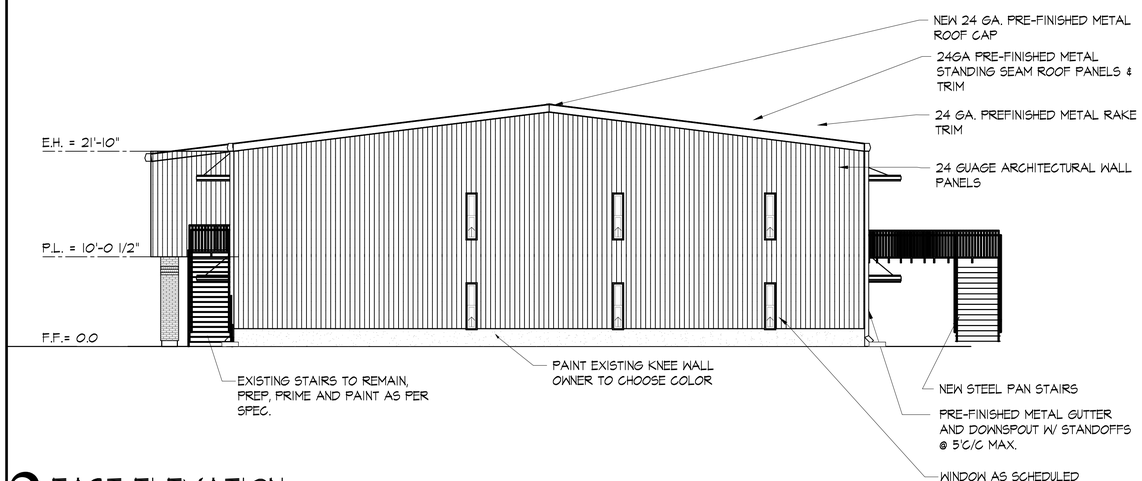

2 EAST ELEVATION
SCALE: 1/8" = 1'-0"
RE: -

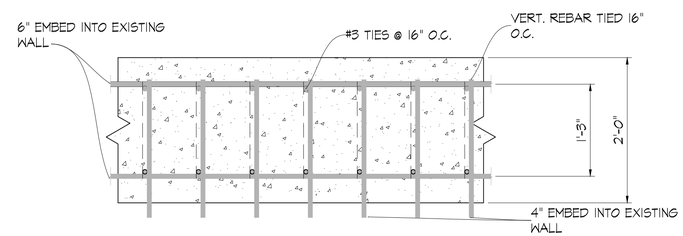

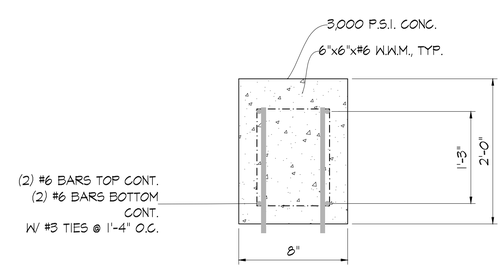

3 KNEE WALL DETAIL
SCALE: 1/8" = 1'-0"
RE: -

FOR BIDS
PRINTED: 8/5/25

KING architects INC.
Barry D. King, AIA,
Architect
1312 Sampson St.
Westlake, LA 70669
337-494-0806
www.kingarchitects.net

© COPYRIGHT 2025
ALL INFORMATION, EITHER DRAWN, WRITTEN, OR IMPLIED APPEARING IN THIS DOCUMENT SHALL NOT BE DUPLICATED, DISCLOSED, OR OTHERWISE USED WITHOUT THE WRITTEN PERMISSION OF BARRY D. KING AIA. THIS DOCUMENT IS AN INSTRUMENT OF SERVICE AND IS THE SOLE PROPERTY OF THE AUTHOR. FURTHERMORE, THE USE OF THIS DOCUMENT FOR ANY PURPOSE SHALL BE REVOKED, IF THE INTENT OF THE DESIGN OR THE CONSTRUCTION TECHNIQUES OR DETAILS SHOWN HEREIN ARE NOT ADHERED TO OR THE CONTRACTUAL AGREEMENT GOVERNING THEIR USE ARE NOT STRICTLY ADHERED TO.

JOB NO:	2316
DATE:	MAR, 2025
DRWN. BY:	BDC
CHKD. BY:	BDK

REVISIONS

A	FOR BIDS

GREATER ST MARY
MISSIONARY BAPTIST
1401 MOELING STREET
LAKE CHARLES, LA 70601
MINISTRY CENTER

SOUTH & EAST ELEVATION
ALTERNATE #1

MC-A-301

KAI # 2316 / PRINT DATE 8/5/25

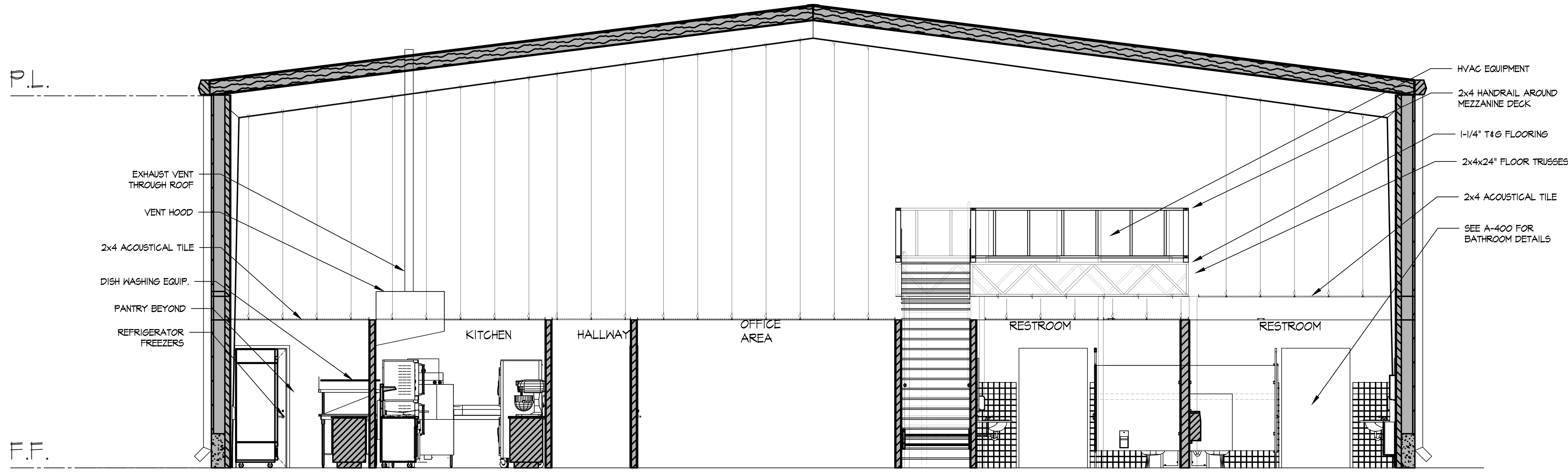

1 F.F. ELEVATION
SCALE: 1/4" = 1'-0"
RE: A-200

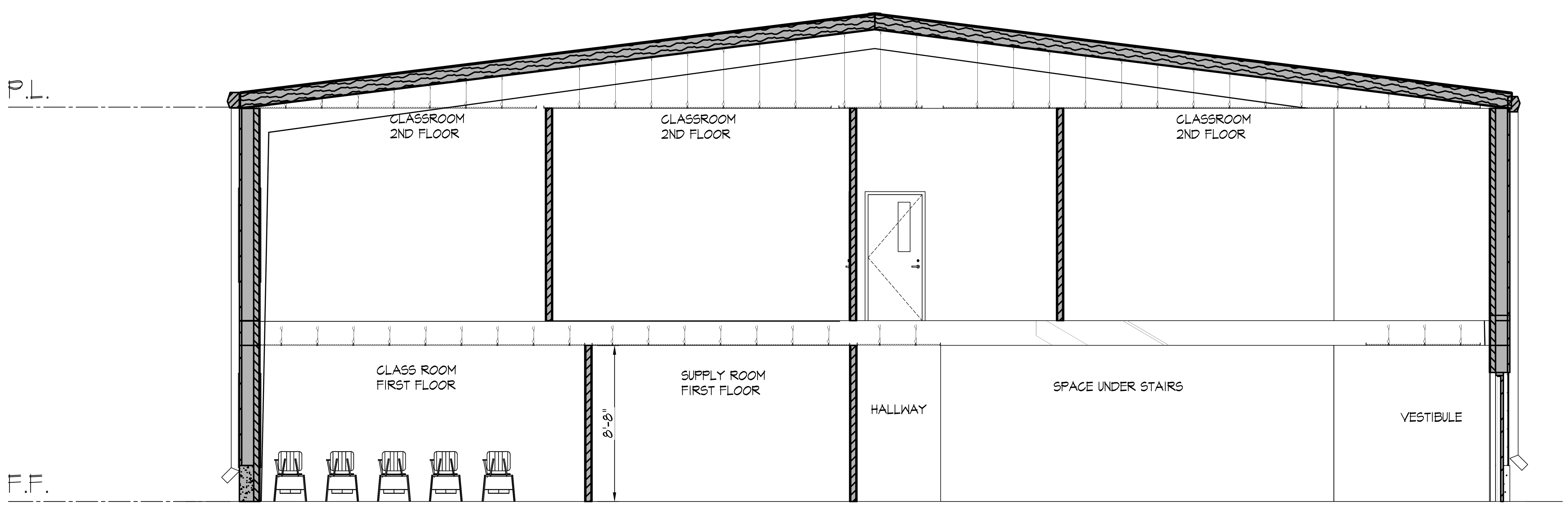

2 SF SECTION
SCALE: 1/4" = 1'-0"
RE: A-200

FOR BIDS
PRINTED: 8/5/25

KING architects INC.
Barry D. King, AIA, Architect
1312 Sampson St.
Westlake, LA 70669
337-494-0806
www.kingarchitects.net

© COPYRIGHT 2024
ALL INFORMATION, EITHER DRAWN, WRITTEN, OR IMPLIED APPEARING IN THIS DOCUMENT SHALL NOT BE DUPLICATED, DISCLOSED, OR OTHERWISE USED WITHOUT THE WRITTEN PERMISSION OF BARRY D. KING AIA THIS DOCUMENT IS AN INSTRUMENT OF SERVICE AND IS THE SOLE PROPERTY OF THE AUTHOR. FURTHERMORE, THE USE OF THIS DOCUMENT FOR ANY PURPOSE SHALL BE REVOKED, IF THE INTENT OF THE DESIGN OR THE CONSTRUCTION TECHNIQUES OR DETAILS SHOWN HEREIN ARE NOT ADHERED TO OR THE CONTRACTUAL AGREEMENT GOVERNING THEIR USE ARE NOT STRICTLY ADHERED TO.

JOB NO: 2316
DATE: MAR. 2025
DRWN. BY: -
CHKD. BY: -

REVISIONS

1	FOR BIDS

BARRY D. KING REG. NO. 3755 STATE OF LOUISIANA REGISTERED ARCHITECT

GREATER ST MARY MISSIONARY BAPTIST
1401 MOELING STREET
LAKE CHARLES, LA 70601
MINISTRY CENTER

BUILDING SECTION
ALTERNATE #1

MC-A-302

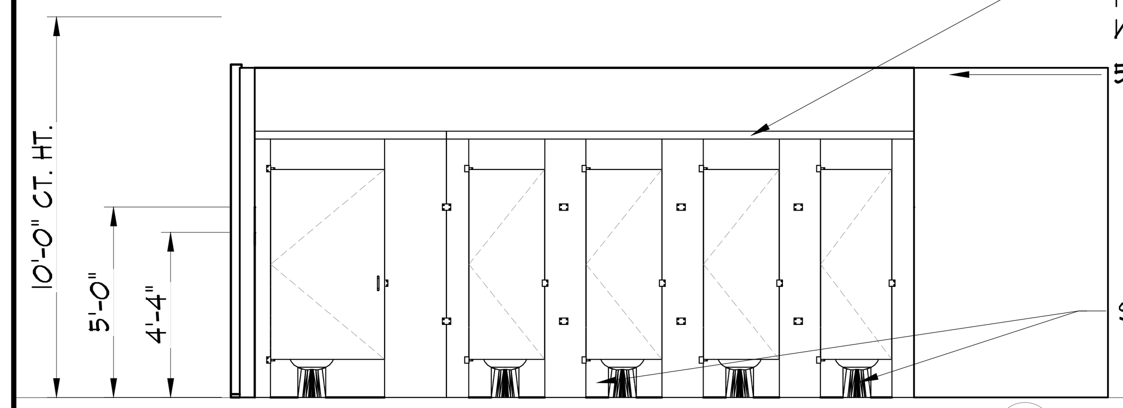

1 WOMENS RR
SCALE: 1/4" = 1'-0"
RE: A-200, A-201, A-202

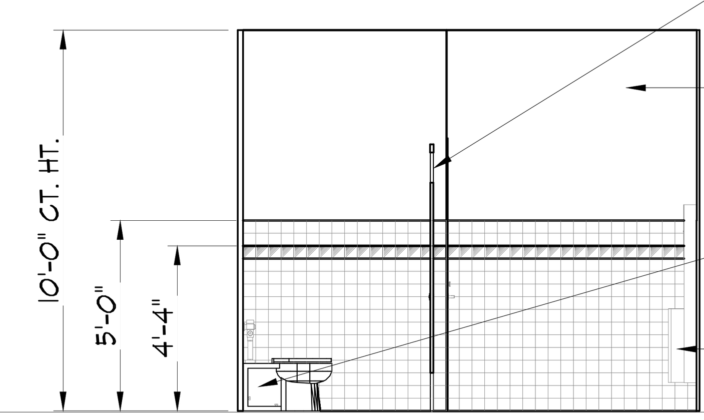

2 WOMENS RR
SCALE: 1/4" = 1'-0"
RE: A-200, A-201, A-202

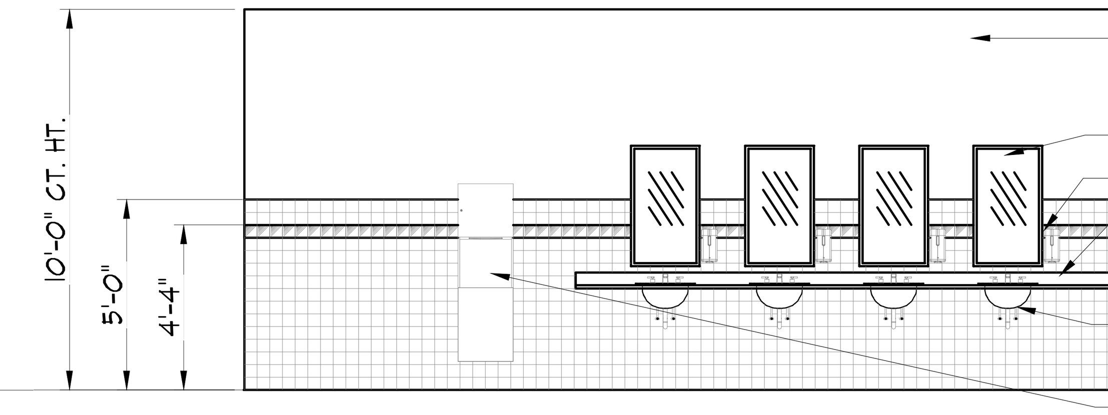

3 WOMENS RR
SCALE: 1/4" = 1'-0"
RE: A-200, A-201, A-202

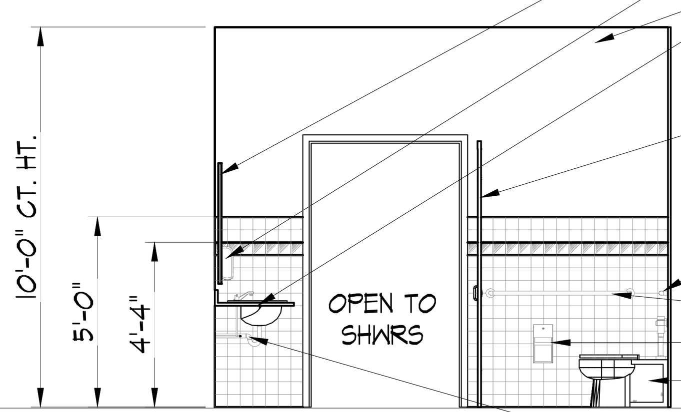

4 WOMENS RR
SCALE: 1/4" = 1'-0"
RE: A-200, A-201, A-202

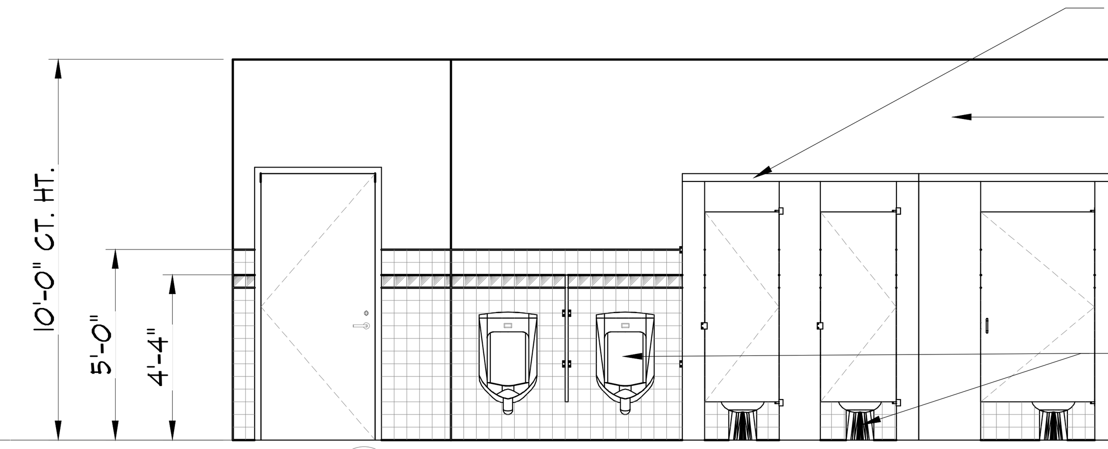

5 MENS RR
SCALE: 1/4" = 1'-0"
RE: A-200, A-201, A-202

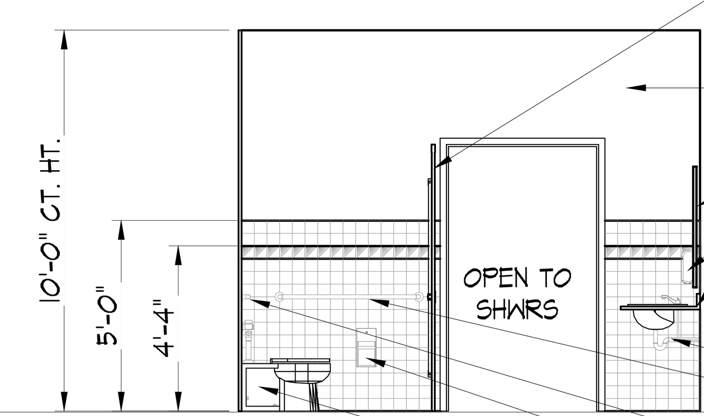

6 MENS RR
SCALE: 1/4" = 1'-0"
RE: A-200, A-201, A-202

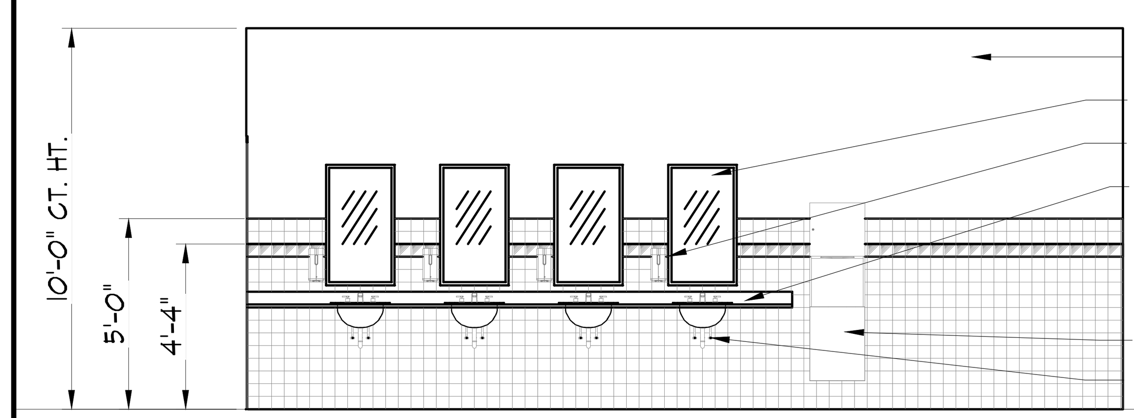

7 MENS RR
SCALE: 1/4" = 1'-0"
RE: A-200, A-201, A-202

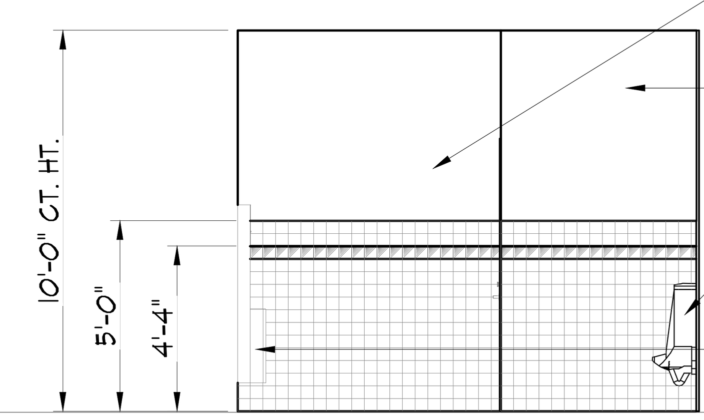

8 MENS RR
SCALE: 1/4" = 1'-0"
RE: A-200, A-201, A-202

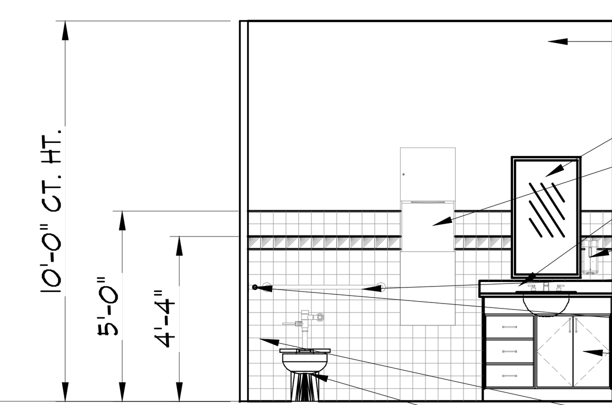

9 MENS RR
SCALE: 1/4" = 1'-0"
RE: A-200, A-201, A-202

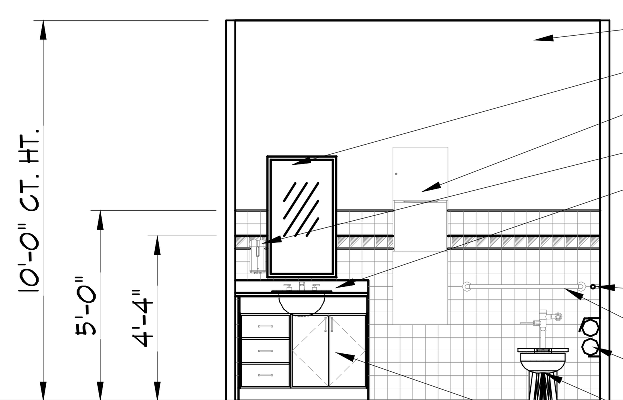

10 LADIES RR
SCALE: 1/4" = 1'-0"
RE: A-200, A-201, A-202

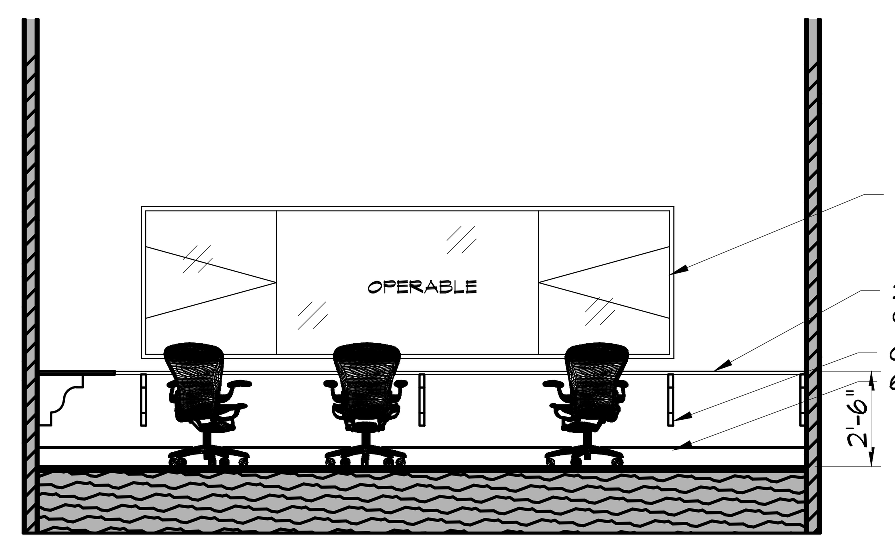

11 SOUND BOOTH
SCALE: 1/4" = 1'-0"
RE: A-200, A-201, A-202

FOR BIDS
PRINTED: 8/21/25

KING architects INC.
Barry D. King, AIA, Architect
1312 Sampson St.
Westlake, LA 70669
337-494-0806
www.kingarchitects.net

© COPYRIGHT 2024
ALL INFORMATION, EITHER DRAWN, WRITTEN, OR IMPLIED APPEARING IN THIS DOCUMENT SHALL NOT BE DUPLICATED, DISCLOSED, OR OTHERWISE USED WITHOUT THE WRITTEN PERMISSION OF BARRY D. KING AIA. THIS DOCUMENT IS AN INSTRUMENT OF SERVICE AND IS THE SOLE PROPERTY OF THE AUTHOR. FURTHERMORE, THE USE OF THIS DOCUMENT FOR ANY PURPOSE SHALL BE REVOKED, IF THE INTENT OF THE DESIGN OR THE CONSTRUCTION TECHNIQUES OR DETAILS SHOWN HEREIN ARE NOT ADHERED TO OR THE CONTRACTUAL AGREEMENT GOVERNING THEIR USE ARE NOT STRICTLY ADHERED TO.

JOB NO: 2316
DATE: MAR. 2025
DRWN. BY: BDC
CHKD. BY: BDK

REVISIONS

1	FOR BIDS

BARRY D. KING REG. NO. 3755 STATE OF LOUISIANA REGISTERED ARCHITECT

GREATER ST MARY MISSIONARY BAPTIST
1401 MOELING STREET
LAKE CHARLES, LA 70601
MINISTRY CENTER

INTERIOR ELEVATIONS
ALTERNATE #1

MC-A-400

KAI # 2316 / PRINT DATE 8/21/25

DOOR SCHEDULE

DOOR #	SIZE	WIDTH	HEIGHT	Material	GLAZING	REMARKS
D101	PR 36 x 84	6'-0"	7'-0"	STORE FRONT	FULL GLASS	LOCKABLE/ACCESS CONTROL
D102	PR 36 x 84	6'-0"	7'-0"	STORE FRONT	FULL GLASS	LOCKABLE/ACCESS CONTROL
D103	36 x 84	3'-0"	7'-0"	HOLLOW CORE METAL	6"X27" WIRE GLASS	LOCKABLE
D104	36 x 84	3'-0"	7'-0"	SOLID CORE WOOD	6"X27" WIRE GLASS	LOCKABLE
D105	PR 36 x 84	6'-0"	7'-0"	INSULATED HOLLOW METAL	NO	LOCKABLE
D106	36 x 84	3'-0"	7'-0"	SOLID CORE WOOD	NO	POCKET
D107	36 x 84	3'-0"	7'-0"	SOLID CORE WOOD	NO	POCKET
D108	36 x 84	3'-0"	7'-0"	SOLID CORE WOOD	NO	LOCKABLE
D109	36 x 84	3'-0"	7'-0"	SOLID CORE WOOD	6"X27" WIRE GLASS	LOCKABLE
D110	36 x 84	3'-0"	7'-0"	SOLID CORE WOOD	6"X27" WIRE GLASS	LOCKABLE
D111	36 x 84	3'-0"	7'-0"	SOLID CORE WOOD	6"X27" WIRE GLASS	LOCKABLE
D112	36 x 84	3'-0"	7'-0"	SOLID CORE WOOD	6"X27" WIRE GLASS	LOCKABLE
D113	36 x 84	3'-0"	7'-0"	SOLID CORE WOOD	6"X27" WIRE GLASS	LOCKABLE
D114	36 x 84	3'-0"	7'-0"	INSULATED HOLLOW METAL	6"X27" WIRE GLASS	LOCKABLE
D115	36 x 84	3'-0"	7'-0"	SOLID CORE WOOD	6"X27" WIRE GLASS	LOCKABLE
D117	36 x 84	3'-0"	7'-0"	SOLID CORE WOOD	NO	PASSAGE LOCK
D118	24 x 84	15'-8"	9'-0"	ACCORDION PARTITION	NO	NO LOCK
D120	36 x 84	3'-0"	7'-0"	SOLID CORE WOOD	NO	PASSAGE LOCK
D122	36 x 84	3'-0"	7'-0"	SOLID CORE WOOD	NO	LOCKABLE
D123	36 x 84	3'-0"	7'-0"	SOLID CORE WOOD	NO	LOCKABLE
D124	36 x 84	3'-0"	7'-0"	SOLID CORE WOOD	NO	LOCKABLE
D125	36 x 84	3'-0"	7'-0"	SOLID CORE WOOD	NO	LOCKABLE
D126	PR 36 x 84	6'-0"	7'-0"	SOLID CORE WOOD	NO	PASSAGE LOCK
D127	PR 36 x 84	6'-0"	7'-0"	SOLID CORE WOOD	NO	PASSAGE LOCK
D128	36 x 84	3'-0"	7'-0"	SOLID CORE WOOD	6"X27" WIRE GLASS	LOCKABLE/ACCESS CONTROL
D129	36 x 84	3'-0"	7'-0"	SOLID CORE WOOD	6"X27" WIRE GLASS	LOCKABLE
D130	36 x 84	3'-0"	7'-0"	SOLID CORE WOOD	6"X27" WIRE GLASS	LOCKABLE
D131	PR 36 x 84	6'-0"	7'-0"	INSULATED HOLLOW METAL	NO	LOCKABLE
D132	36 x 84	3'-0"	7'-0"	INSULATED HOLLOW METAL	NO	LOCKABLE
D133	PR 36 x 84	6'-0"	7'-0"	INSULATED HOLLOW METAL	NO	LOCKABLE
D134	PR 36 x 84	6'-0"	7'-0"	SOLID CORE WOOD	NO	LOCKABLE
D135	36 x 84	3'-0"	7'-0"	SOLID CORE WOOD	NO	LOCKABLE
D136	36 x 84	3'-0"	7'-0"	SOLID CORE WOOD	6"X27" WIRE GLASS	LOCKABLE
D137	36 x 84	3'-0"	7'-0"	SOLID CORE WOOD	6"X27" WIRE GLASS	LOCKABLE

DOOR SCHEDULE

Door#	SIZE	WIDTH	HEIGHT	THICKNESS	GLAZING	REMARKS
D201	36 x 84	3'-0"	7'-0"	1 3/4"	NO	
D202	36 x 84	3'-0"	7'-0"	1 3/4"	6"x27" WIRE GLASS	
D203	36 x 84	3'-0"	7'-0"	1 3/4"	NO	
D204	36 x 84	3'-0"	7'-0"	1 3/4"	NO	POCKET
D205	36 x 84	3'-0"	7'-0"	1 3/4"	NO	
D206	36 x 84	3'-0"	7'-0"	1 3/4"	NO	POCKET
D207	36 x 84	3'-0"	7'-0"	1 3/4"	6"x27" WIRE GLASS	
D208	36 x 84	3'-0"	7'-0"	1 3/4"	6"x27" WIRE GLASS	
D209	36 x 84	3'-0"	7'-0"	1 3/4"	6"x27" WIRE GLASS	
D210	36 x 84	3'-0"	7'-0"	1 3/4"	6"x27" WIRE GLASS	
D211	36 x 84	3'-0"	7'-0"	1 3/4"	6"x27" WIRE GLASS	
D212	36 x 84	3'-0"	7'-0"	1 3/4"	6"x27" WIRE GLASS	
D213	36 x 84	3'-0"	7'-0"	1 3/4"	NO	

NOTE:
LOCKS ON DOORS IN MEANS OF EGRESS SHALL NOT REQUIRE THE USE OF A KEY, SPECIAL DEVICE OR SPECIAL KNOWLEDGE TO OPEN IN DIRECTION OF EGRESS.

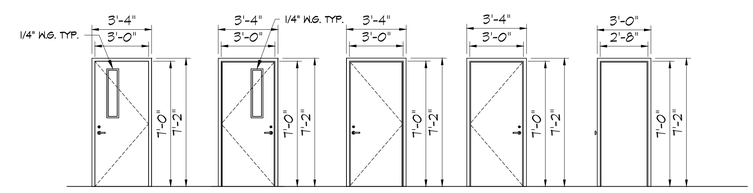

APPLIES TO DOORS: D204 D206 D207 D208 D209 D210 D211 D212 D215

APPLIES TO DOORS: D201 D203 D205 D213

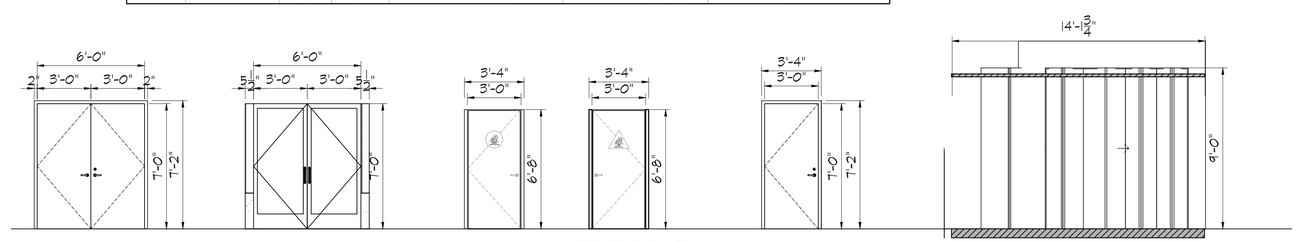

APPLIES TO DOORS: D131 D133 D134

APPLIES TO DOORS: D101 D102

APPLIES TO DOORS: D108 D120

APPLIES TO DOORS: D105 D117

APPLIES TO DOORS: D122 D123 D124 D125 D135

APPLIES TO DOORS: D118

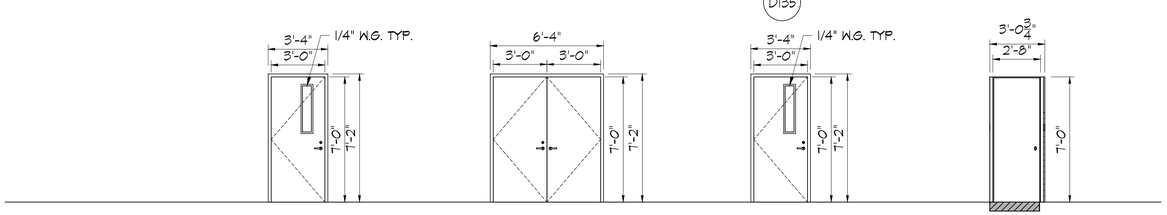

APPLIES TO DOORS: D103 D114 D132

APPLIES TO DOORS: D126 D127

APPLIES TO DOORS: D104 D109 D110 D111 D112 D113 D115 D128 D129 D130 D136 D137

APPLIES TO DOORS: D106 D107

1 DOOR SCHEDULE
SCALE: 1/4" = 1'-0"
RE: MC-A-800

FOR BIDS
PRINTED: 8/5/25

KING architects INC.
Barry D. King, AIA,
Architect
1312 Sampson St.
Westlake, LA 70669
337-494-0806
www.kingarchitects.net

c COPYRIGHT 2024
ALL INFORMATION, EITHER DRAWN, WRITTEN, OR IMPLIED APPEARING IN THIS DOCUMENT SHALL NOT BE DUPLICATED DISCLOSED OR OTHERWISE USED WITHOUT THE WRITTEN PERMISSION OF BARRY D. KING AIA THIS DOCUMENT IS AN INSTRUMENT OF SERVICE AND IS THE SOLE PROPERTY OF THE AUTHOR. FURTHERMORE, THE USE OF THIS DOCUMENT FOR ANY PURPOSE SHALL BE REVOKED, IF THE INTENT OF THE DESIGN OR THE CONSTRUCTION TECHNIQUES OR DETAILS SHOWN HEREIN ARE NOT ADHERED TO OR THE CONTRACTUAL AGREEMENT GOVERNING THEIR USE ARE NOT STRICTLY ADHERED TO.

JOB NO: 2316
DATE: MAR, 2025
DRWN. BY: -
CHKD. BY: -

REVISIONS
A FOR BIDS
1
2
3

GREATER ST MARY
MISSIONARY BAPTIST
LAKE CHARLES, LA 70601
MINISTRY CENTER
MINISTRY BUILDING

SCHEDULES
ALTERNATE #1

MC-A-800

KAI # 2316 / PRINT DATE 8/5/25

FIRST FLOOR SCHEDULE OF ROOM FINISHES-

RM #	ROOM NAME	FLOOR: LVT WOOD GRAIN PLANK	FLOOR: SEALED CONCRETE	FLOOR: STAINED CONCRETE	BASE: RUBBER BASE (4")	WALLS: 5/8" GWB TAPE, FLOAT AND PAINT	WALLS: 5/8" GWB W/FRP FINISH	WALLS: 5/8" MOISTURE RESISTANT GWB TAPE, FLOAT AND PAINT	CLG: ARMSTRONG #1717 (24"X24"X5/8") LAY-IN	CLG HT: 10'-0"	CLG HT: OPEN TO ROOF STRUCTURE	REMARKS
100	MULTIPURPOSE ROOM	O			O	O					O	
101	VESTIBULE	O			O	O					O	
102	RESOURCE ROOM	O			O	O			O	O		
103	CLASSROOM	O			O	O			O	O		
104	CLASSROOM	O			O	O			O	O		
105	CLASSROOM	O			O	O			O	O		
106	SR. CRAFTROOM/CLASSROOM	O			O	O			O	O		
107	CLASSROOM	O			O	O			O	O		
108	CLASSROOM	O			O	O			O	O		
109	WOMEN R.R.	O			O			O	O	O		
110	MEN R.R.	O			O			O	O	O		
112	KITCHEN		O		O		O		O	O		
113	PANTRY		O		O		O		O	O		
114	PASTOR OFFICE			O	O	O			O	O		
115	OFFICE			O	O	O			O	O		
116	KITCHEN OFFICE			O	O	O			O	O		
117	CLOSET			O	O	O			O	O		
118	CLOSET			O	O	O			O	O		
120	WOMEN R.R.			O	O	O			O	O		
121	MEN R.R.			O	O	O			O	O		
122	WOMEN SHWR			O	O	O			O	O		
123	MEN SHWR			O	O	O			O	O		
126	CLASSROOM	O			O	O			O	O		

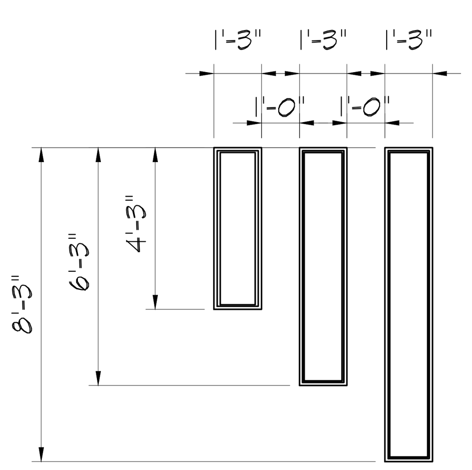

APPLIES TO WINDOWS:

W100 W101 W102
W103 W104 W105

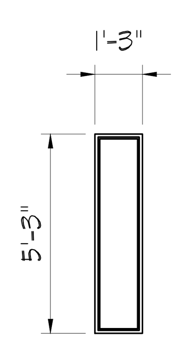

APPLIES TO WINDOWS:

W106 W107 W108
W109 W110 W111
W201 W202 W203
W204 W205 W206

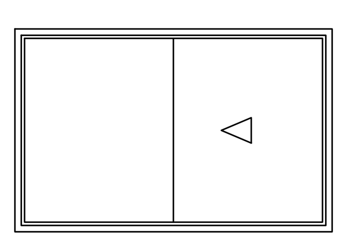

APPLIES TO WINDOW:

W207

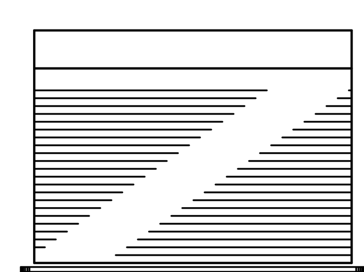

APPLIES TO WINDOW

W112

SECOND FLOOR SCHEDULE OF ROOM FINISHES-

RM #	ROOM NAME	FLOOR: 1-1/4" T&G PLYWOOD	FLOOR: LVT WOOD GRAIN PLANK	BASE: RUBBER BASE (4")	WALLS: 5/8" GWB TAPE, FLOAT AND PAINT	CLG: ARMSTRONG #1717 (24"X24"X5/8") LAY-IN	CLG: OPEN TO ROOF DECK	CLG HT: 10'-0"	CLG HT: OPEN TO ROOF DECK	REMARKS
100	MULTIPURPOSE ROOM BELOW								O	
201	MEZZANINE DECK	O					O	O		
202	SOUND BOOTH		O	O	O	O		O		
203	HALLWAY		O	O	O	O		O		
204	CLASSROOM 1		O	O	O	O		O		
205	CLASSROOM 2		O	O	O	O		O		
206	MEN RR		O	O	O	O		O		
207	WOMENS R.R.		O	O	O	O		O		
208	CLASSROOM 3		O	O	O	O		O		
209	CLASSROOM 4		O	O	O	O		O		
210	CLASSROOM 5		O	O	O	O		O		
211	CLASSROOM 6		O	O	O	O		O		
212	CLASSROOM 7		O	O	O	O		O		
213	CLASSROOM 8		O	O	O	O		O		

WINDOW SCHEDULE

MARK	SIZE	WIDTH	HEIGHT	HEAD HEIGHT	GLAZING	MATERIAL	REMARKS
W100	12 x 48	1'-0"	4'-0"	10'-0 1/2"	DUAL PANE	ALUM.	FIXED
W101	12 x 72	1'-0"	6'-0"	10'-0 1/2"	DUAL PANE	ALUM.	FIXED
W102	12 x 96	1'-0"	8'-0"	10'-0 1/2"	DUAL PANE	ALUM.	FIXED
W103	12 x 96	1'-0"	8'-0"	10'-0 1/2"	DUAL PANE	ALUM.	FIXED
W104	12 x 72	1'-0"	6'-0"	10'-0 1/2"	DUAL PANE	ALUM.	FIXED
W105	12 x 48	1'-0"	4'-0"	10'-0 1/2"	DUAL PANE	ALUM.	FIXED
W106	12 x 60	1'-0"	5'-0"	7'-0"	DUAL PANE	ALUM.	FIXED
W107	12 x 60	1'-0"	5'-0"	7'-0"	DUAL PANE	ALUM.	FIXED
W108	12 x 60	1'-0"	5'-0"	7'-0"	DUAL PANE	ALUM.	FIXED
W109	12 x 60	1'-0"	5'-0"	7'-0"	DUAL PANE	ALUM.	FIXED
W110	12 x 60	1'-0"	5'-0"	7'-0"	DUAL PANE	ALUM.	FIXED
W111	12 x 60	1'-0"	5'-0"	7'-0"	DUAL PANE	ALUM.	FIXED

WINDOW SCHEDULE

MARK	SIZE	WIDTH	HEIGHT	HEAD HEIGHT	GLAZING	MATERIAL	REMARKS
W201	12 x 60	1'-0"	5'-0"	7'-0"	DUAL PANE	ALUM.	FIXED
W202	12 x 60	1'-0"	5'-0"	7'-0"	DUAL PANE	ALUM.	FIXED
W203	12 x 60	1'-0"	5'-0"	7'-0"	DUAL PANE	ALUM.	FIXED
W204	12 x 60	1'-0"	5'-0"	7'-0"	DUAL PANE	ALUM.	FIXED
W205	12 x 60	1'-0"	5'-0"	7'-0"	DUAL PANE	ALUM.	FIXED
W206	12 x 60	1'-0"	5'-0"	7'-0"	DUAL PANE	ALUM.	FIXED
W207	96 x 60	8'-0"	5'-0"	7'-0"	DUAL PANE	ALUM.	SLIDER

FOR BIDS
PRINTED: 8/21/25

KING architects INC.

Barry D. King, AIA,
Architect
1312 Sampson St.
Westlake, LA 70669
337-494-0806
www.kingarchitects.net

© COPYRIGHT 2024
ALL INFORMATION, EITHER DRAWN, WRITTEN, OR IMPLIED APPEARING IN THIS DOCUMENT SHALL NOT BE DUPLICATED, DISCLOSED, OR OTHERWISE USED WITHOUT THE WRITTEN PERMISSION OF BARRY D. KING AIA THIS DOCUMENT IS AN INSTRUMENT OF SERVICE AND IS THE SOLE PROPERTY OF THE AUTHOR. FURTHERMORE, THE USE OF THIS DOCUMENT FOR ANY PURPOSE SHALL BE REVOKED, IF THE INTENT OF THE DESIGN OR THE CONSTRUCTION TECHNIQUES OR DETAILS SHOWN HEREIN ARE NOT ADHERED TO OR THE CONTRACTUAL AGREEMENT GOVERNING THEIR USE ARE NOT STRICTLY ADHERED TO.

JOB NO: 2316
DATE: MAR. 2025
DRWN. BY: -
CHKD. BY: -

REVISIONS
1 FOR BIDS

GREATER ST MARY
MISSIONARY BAPTIST
1401 MOELING STREET
LAKE CHARLES, LA 70601
MINISTRY CENTER

ROOM FIN.
WIND.
SCHEDULE
ALTERNATE #1

MC-A-801

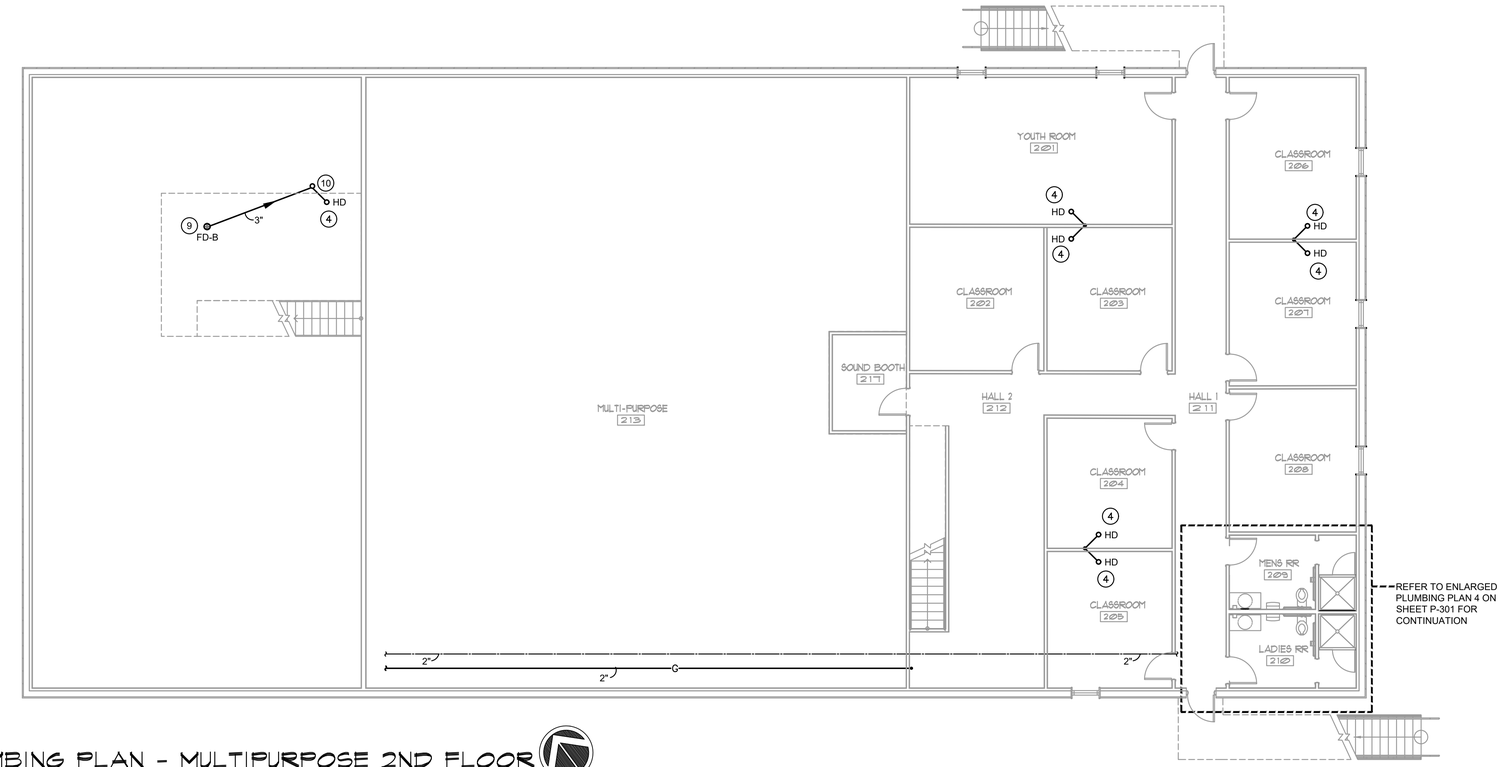

2 PLUMBING PLAN - MULTIPURPOSE 2ND FLOOR

SCALE: 1/8" = 1'-0" REFER TO ARCHITECTURAL PLANS FOR DIMENSIONS

NORTH

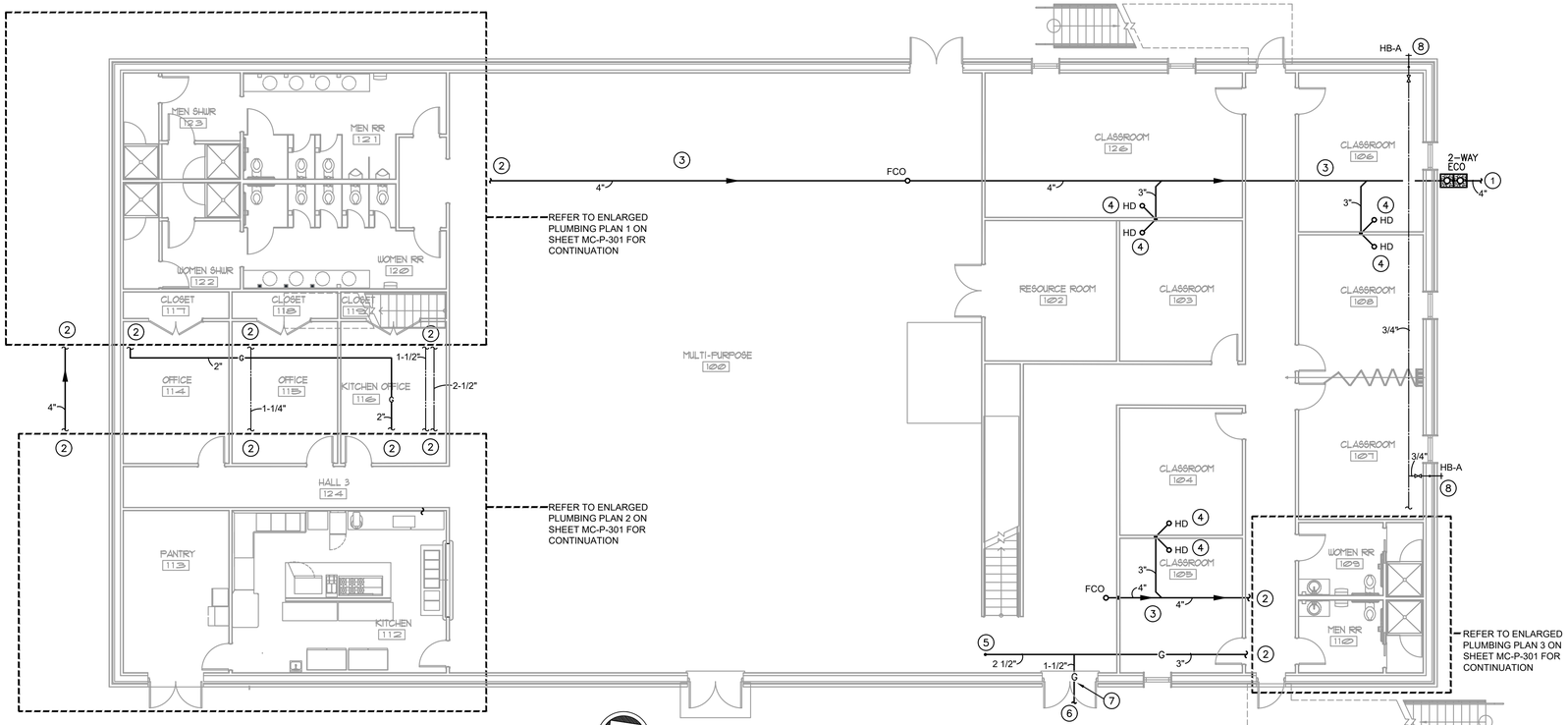

1 PLUMBING PLAN - MULTIPURPOSE 1ST FLOOR

SCALE: 1/8" = 1'-0" REFER TO ARCHITECTURAL PLANS FOR DIMENSIONS

NORTH

GENERAL NOTES:

A. ALL WORK SHALL BE IN ACCORDANCE WITH APPLICABLE LOCAL, STATE, AND FEDERAL CODES (INCLUDING INTERNATIONAL PLUMBING CODE, INTERNATIONAL BUILDING CODE, INTERNATIONAL FUEL GAS CODE, NFPA, ETC.) AND APPLICABLE DEQ AND DHHOP REGULATIONS TO THE SATISFACTION OF THE AUTHORITIES HAVING JURISDICTION. CONTRACTOR SHALL OBTAIN REQUIRED PERMITS AND APPROPRIATE WORK AUTHORIZATION PRIOR TO BEGINNING WORK.

B. CONTRACTOR SHALL VERIFY EXACT LOCATION OF UTILITIES, INVERT ELEVATIONS, ETC. PRIOR TO BEGINNING ANY ROUGH-IN OF SUBSURFACE WORK. COORDINATE ALL UTILITY TIE-IN REQUIREMENTS WITH RESPECTIVE UTILITIES.

C. REFER TO ARCHITECTURAL DRAWINGS FOR ALL DIMENSIONS, DETAILS, ETC. INSTALL WORK TO CONFORM TO ARCHITECTURAL AND STRUCTURAL DRAWINGS AS REQUIRED. REVIEW COMPLETE SET OF CONTRACT DOCUMENTS PRIOR TO SUBMITTING BID.

D. CONTRACTOR SHALL RUN ALL NEW UTILITIES (WATER, SEWER, ETC.) AROUND NEW CONSTRUCTION AREA AS INDICATED PRIOR TO SHUTTING DOWN OR TIE-ING INTO ANY SYSTEMS. COORDINATE ALL UTILITY SERVICE DISRUPTIONS TO OTHER UTILITY CUSTOMERS WITH RESPECTIVE UTILITY. ALL UTILITY RELOCATION (SUCH AS WATER) SHALL BE DONE IN STRICT COMPLIANCE WITH UTILITY COMPANY STANDARDS AND REQUIREMENTS. CONTACT UTILITY COMPANY, VERIFY AND DOCUMENT REQUIREMENTS, COSTS, CHARGES, ETC. CONTRACTOR SHALL FULLY COMPLY WITH ALL UTILITY COMPANY REQUIREMENTS.

E. COORDINATE ALL WORK THROUGH GENERAL CONTRACTOR. COORDINATE CUTTING, PATCHING, TRENCHING WORK WITH SITE GRADING / PAVING PLAN.

F. COORDINATE INSTALLATION OF ALL PLUMBING, PIPING, ETC. WITH ARCHITECTURAL, STRUCTURAL, CIVIL, MECHANICAL, ELECTRICAL, EXISTING AND NEW CONDITIONS, ALL TRADES, ETC.

G. ALL DOMESTIC WATER BRANCH LINES SHALL HAVE VALVES AT MAIN LINE.

H. RUN ALL GAS PIPING IN NON-CONCEALED SPACES. PROVIDE SLEEVES AT ALL GAS LINES THAT PENETRATE WALLS.

PLUMBING KEYNOTES:

1. REFER TO SHEET CH-P-100 FOR CONTINUATION.
2. REFER TO SHEET MC-P-301 FOR CONTINUATION.
3. SAW CUT EXISTING SLAB FOR INSTALLATION OF NEW SEWER LINES. PATCH SLAB TO MATCH EXISTING.
4. PROVIDE A 2" INSULATED HUB DRAIN ABOVE CEILING FOR CONDENSATE. INSULATE SEWER STACK DOWN TO SLAB AS PER SPECIFICATIONS.
5. GAS LINE RISES UP. REFER TO SECOND FLOOR THIS SHEET FOR CONTINUATION.
6. REFER TO SHEET CH-P-200 FOR CONTINUATION.
7. PROVIDE SLEEVE WHERE GAS PIPE PENETRATES WALL.
8. 3/4" DOMESTIC COLD WATER LINE DOWN IN WALL AND OUT TO HOSE BIBB. PROVIDE ACCESSIBLE BALL TYPE CUTOFF VALVE ABOVE CEILING.

KING architects INC.
Barry D. King, AIA,
Architect
1312 Sampson St.
Westlake, LA 70669
337.494.0806
www.kingarchitects.net

© COPYRIGHT 2022
ALL INFORMATION, EITHER DRAWN, WRITTEN, OR IMPLIED APPEARING IN THIS DOCUMENT SHALL NOT BE DUPLICATED, DISCLOSED, OR OTHERWISE USED WITHOUT THE WRITTEN PERMISSION OF BARRY D. KING AIA THIS DOCUMENT IS AN INSTRUMENT OF SERVICE AND IS THE SOLE PROPERTY OF THE AUTHOR. FURTHERMORE, THE USE OF THIS DOCUMENT FOR ANY PURPOSE SHALL BE REVOKED, IF THE INTENT OF THE DESIGN OR THE CONSTRUCTION TECHNIQUES OR DETAILS SHOWN HEREIN ARE NOT ADHERED TO OR THE CONTRACTUAL AGREEMENT GOVERNING THEIR USE ARE NOT STRICTLY ADHERED TO.

JOB NO: 2316
DATE: JULY 2025
DRWN. BY: ET
CHKD. BY: RCC

REVISIONS

STATE OF LOUISIANA
R. CRAIG CAMPBELL, II
License No. 20350
8/1/25
PROFESSIONAL ENGINEER

GREATER ST MARY MISSIONARY BAPTIST
1401 MOELING STREET
LAKE CHARLES, LA 70601
MINISTRY CENTER

ADG ENGINEERING
ASSOCIATED DESIGN GROUP, INC.
3909 W Congress Street, Suite 201
Lafayette, Louisiana 70506
Phone: (337) 234-5710
Email: adginc@adginc.org
Project No. 24232

PLUMBING PLAN

ALTERNATE #1

MC-P-300

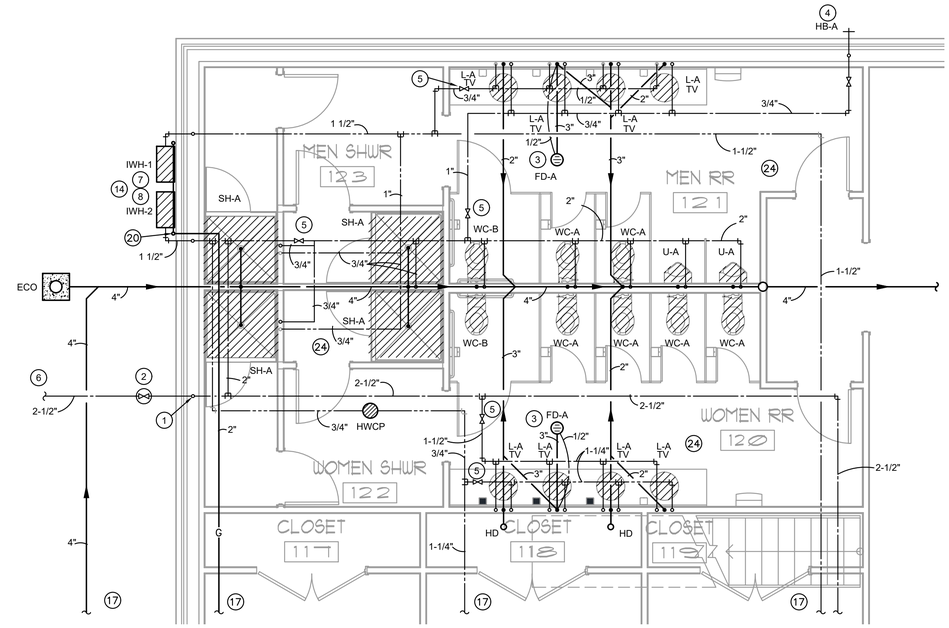

1 PLUMBING PLAN - MEN RR 121 / WOMEN RR 120

SCALE: 1/4" = 1'-0" REFER TO ARCHITECTURAL PLANS FOR DIMENSIONS

NORTH

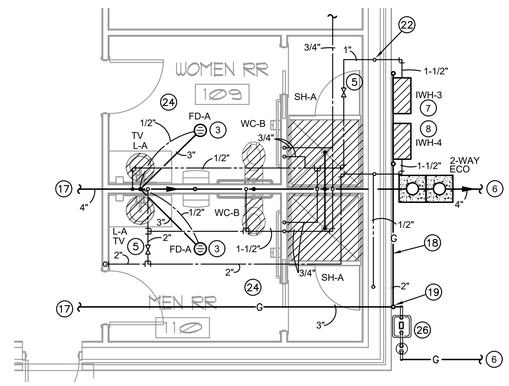

3 PLUMBING PLAN - WOMEN RR 109 / MEN RR 110

SCALE: 1/4" = 1'-0" REFER TO ARCHITECTURAL PLANS FOR DIMENSIONS

NORTH

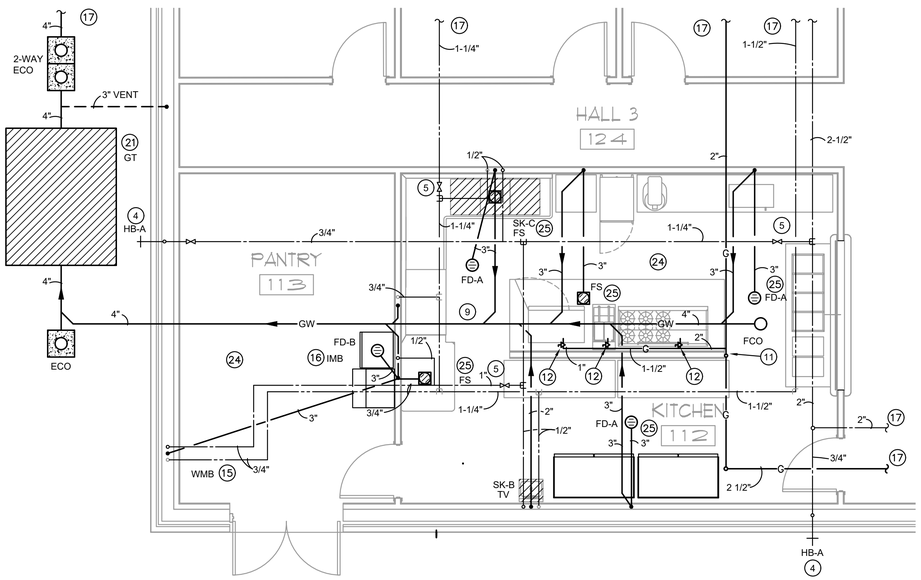

2 PLUMBING PLAN - KITCHEN 112 / PANTRY 113

SCALE: 1/4" = 1'-0" REFER TO ARCHITECTURAL PLANS FOR DIMENSIONS

NORTH

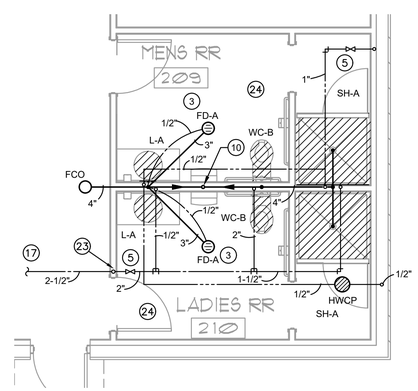

4 PLUMBING PLAN - MENS RR 209 / 210 LADIES RR

SCALE: 1/4" = 1'-0" REFER TO ARCHITECTURAL PLANS FOR DIMENSIONS

NORTH

GENERAL NOTES:

A. ALL WORK SHALL BE IN ACCORDANCE WITH APPLICABLE LOCAL, STATE, AND FEDERAL CODES (INCLUDING INTERNATIONAL PLUMBING CODE, INTERNATIONAL BUILDING CODE, INTERNATIONAL FUEL GAS CODE, NFPA, ETC.) AND APPLICABLE DEQ AND DHHOP REGULATIONS TO THE SATISFACTION OF THE AUTHORITIES HAVING JURISDICTION. CONTRACTOR SHALL OBTAIN REQUIRED PERMITS AND APPROPRIATE WORK AUTHORIZATION PRIOR TO BEGINNING WORK.

B. CONTRACTOR SHALL VERIFY EXACT LOCATION OF UTILITIES, INVERT ELEVATIONS, ETC. PRIOR TO BEGINNING ANY ROUGH-IN OF SUBSURFACE WORK. COORDINATE ALL UTILITY TIE-IN REQUIREMENTS WITH RESPECTIVE UTILITIES.

C. REFER TO ARCHITECTURAL DRAWINGS FOR ALL DIMENSIONS, DETAILS, ETC. INSTALL WORK TO CONFORM TO ARCHITECTURAL AND STRUCTURAL DRAWINGS AS REQUIRED. REVIEW COMPLETE SET OF CONTRACT DOCUMENTS PRIOR TO SUBMITTING BID.

D. CONTRACTOR SHALL RUN ALL NEW UTILITIES (WATER, SEWER, GAS, ETC.) AROUND NEW CONSTRUCTION AREA AS INDICATED PRIOR TO SHUTTING DOWN OR TIE-ING INTO ANY SYSTEMS. COORDINATE ALL UTILITY SERVICE DISRUPTIONS TO OTHER UTILITY CUSTOMERS WITH RESPECTIVE UTILITY. ALL UTILITY RELOCATION (SUCH AS WATER) SHALL BE DONE IN STRICT COMPLIANCE WITH UTILITY COMPANY STANDARDS AND REQUIREMENTS. CONTACT UTILITY COMPANY, VERIFY AND DOCUMENT REQUIREMENTS, COSTS, CHARGES, ETC. CONTRACTOR SHALL FULLY COMPLY WITH ALL UTILITY COMPANY REQUIREMENTS.

E. COORDINATE ALL WORK THROUGH GENERAL CONTRACTOR. COORDINATE CUTTING, PATCHING, TRENCHING WORK WITH SITE GRADING / PAVING PLAN.

F. COORDINATE INSTALLATION OF ALL PLUMBING, PIPING, ETC. WITH ARCHITECTURAL, STRUCTURAL, CIVIL, MECHANICAL, ELECTRICAL, EXISTING AND NEW CONDITIONS, ALL TRADES, ETC.

G. ALL DOMESTIC WATER BRANCH LINES SHALL HAVE VALVES AT MAIN LINE.

H. RUN ALL GAS PIPING IN NON-CONCEALED SPACES. PROVIDE SLEEVES AT ALL GAS LINES THAT PENETRATE WALLS.

I. KITCHEN EQUIPMENT IS PROVIDED BY OWNER. PLUMBING CONTRACTOR SHALL INSTALL AND CONNECT PIPING AS REQUIRED FOR PROPER OPERATION OF ALL EQUIPMENT REQUIRING WATER, SEWER AND GAS CONNECTIONS.

PLUMBING KEYNOTES:

1. RUN 2-1/2" DOMESTIC COLD WATER LINE UP FROM BELOW SLAB. CONTINUE UP AND RUN ABOVE CEILING.
2. PROVIDE POTABLE WATER MAIN SHUT-OFF VALVE IN CAST IRON VALVE BOX WITH METAL COVER MARKED "WATER".
3. TAP OFF LAVATORY P-TRAP WITH 1/2" CHROME LINE TO WALL AND CONTINUE IN WALL WITH 1/2" SOFT COPPER LINE TO BELOW SLAB TO TRAP PRIMER CONNECTION ON FLOOR DRAIN. ALL EXPOSED SUPPLY LINES SHALL BE CHROME (J.R. SMITH 2698 OR APPROVED EQUIVALENT P-TRAP TYPE).
4. 3/4" DOMESTIC COLD WATER LINE DOWN IN WALL AND OUT TO HOSE BIBB. PROVIDE ACCESSIBLE BALL TYPE CUTOFF VALVE ABOVE CEILING.
5. PROVIDE A BALL TYPE CUTOFF VALVE ABOVE ACCESSIBLE CEILING FOR ISOLATION. (TYPICAL)
6. REFER TO SHEET MC-P-301 FOR CONTINUATION.
7. REFER TO DETAIL FOR WATER HEATER PIPING.
8. INSTALL INSTANTANEOUS WATER HEATERS ON WALL IN THIS VICINITY. INSTALL PER MANUFACTURER'S RECOMMENDATION. REFER TO SHEET MC-P-401 SCHEDULE AND DETAIL 10.
9. COORDINATE EXACT LOCATION OF FLOOR DRAINS AND FLOOR SINKS WITH FINAL EQUIPMENT LAYOUT AND ARCHITECTURAL / KITCHEN EQUIPMENT DRAWINGS PRIOR TO ANY ROUGH-INS. PROVIDE PROSET TRAP GUARD INSERT IN FLOOR DRAIN.
10. 4" SANITARY SEWER PIPING DOWN TO FIRST FLOOR IN THIS VICINITY.
11. PLUMBING CONTRACTOR SHALL INSTALL A 2" MECHANICAL GAS VALVE BELOW CEILING AS PROVIDED BY HOOD SUPPRESSION CONTRACTOR. PROVIDE CUTOFF VALVE UPSTREAM OF MECHANICAL VALVE.
12. GAS LINE DOWN TO 24" A.F.F. TURN AND CONTINUE OF PIPE SUPPORTS WITH HEADER BEHIND EQUIPMENT. PROVIDE BALL TYPE SHUTOFF VALVE WITH DRIP LEG AT EACH PIECE OF EQUIPMENT REQUIRING GAS. CONNECT TO EQUIPMENT WITH FLEXIBLE TUBING AND QUICK DISCONNECT AS REQUIRED FOR PROPER INSTALLATION AND OPERATION. COORDINATE WITH KITCHEN EQUIPMENT CONTRACTOR. INSTALL PER MANUFACTURERS RECOMMENDATION.
13. PROVIDE A 2" INSULATED HUB DRAIN ABOVE CEILING FOR A/C UNIT CONDENSATE. INSULATE SEWER STACK DOWN TO SLAB AS PER SPECIFICATIONS.
14. WATER HEATERS TO SUPPLY 140 DEGREE WATER. COORDINATE THE TEMPERING VALVES ARE PROVIDE ON SINKS , SHOWERS, AND LAVATORIES AS INDICATE WITH THE MARKING TV ON THE PLANS. THREE COMPARTMENT SINK AND DISHWASHER TO RECEIVE 140 DEGREE WATER.
15. COORDINATE EXACT LOCATION OF WASHING MACHINE PRIOR TO INSTALLING PLUMBING.
16. COORDINATE EXACT LOCATION OF ICE MACHINE PRIOR TO INSTALLING PLUMBING.
17. REFER TO SHEET MC-P-300 FOR CONTINUATION.
18. ROUTE GAS LINE EXPOSED ALONG WALL TO TANKLESS WATER HEATERS. PROVIDE SHUTOFF VALVE WITH DRIP LEG AT EACH HEATER.
19. 3" GAS LINE RUN EXPOSED UP ALONG WALL. TURN GAS LINE THROUGH WALL IN SLEEVE AND CONTINUE ABOVE LAY IN CEILING. SEAL INSIDE OF SLEEVE.
20. 2" GAS LINE THROUGH WALL IN SLEEVE. TURN DOWN EXPOSED ALONG WALL AND CONTINUE TO TANKLESS WATER HEATERS. SEAL INSIDE OF SLEEVE. PROVIDE SHUTOFF VALVE WITH DRIP LEG AT EACH HEATER.
21. PROVIDE A 1000 GALLON GREASE TRAP MODEL SCHIER GB1000 WITH PEDESTRIAN GRADE COVERS. PROVIDE EXTENSION LIDS AS REQUIRED TO BRING LIDS TO GRADE. PROVIDE ANCHOR KIT.
22. 1" HOT WATER LINE UP TO SECOND FLOOR.
23. 2" COLD WATER LINE DOWN TO FIRST FLOOR.
24. SAW CUT EXISTING SLAB FOR INSTALLATION OF NEW SEWER LINES. PATCH SLAB TO MATCH EXISTING.
25. COORDINATE EXACT LOCATION OF FLOOR DRAINS AND FLOOR SINKS WITH FINAL EQUIPMENT LAYOUT AND ARCHITECTURAL / KITCHEN EQUIPMENT DRAWINGS PRIOR TO ANY ROUGH-INS. PROVIDE PROSET TRAP GUARD INSERT IN FLOOR DRAIN.
26. GAS METER AND REGULATOR BY LOCAL GAS COMPANY (1575 CFH DEMAND). CONTRACTOR SHALL PAY FOR ALL SERVICE AND CONNECTION CHARGES, INCLUDING METER AND REGULATOR COST. CONTACT LOCAL GAS CO. PRIOR TO BID FOR ESTIMATE OF SERVICE AND CONNECTION CHARGES.

KING architects INC.
Barry D. King, AIA,
Architect
1312 Sampson St.
Westlake, LA 70669
337.494.0806
www.kingarchitects.net

© COPYRIGHT 2022
ALL INFORMATION, EITHER DRAWN, WRITTEN, OR IMPLIED APPEARING IN THIS DOCUMENT SHALL NOT BE DUPLICATED, DISCLOSED, OR OTHERWISE USED WITHOUT THE WRITTEN PERMISSION OF BARRY D. KING AIA THIS DOCUMENT IS AN INSTRUMENT OF SERVICE AND IS THE SOLE PROPERTY OF THE AUTHOR. FURTHERMORE, THE USE OF THIS DOCUMENT FOR ANY PURPOSE SHALL BE REVOKED, IF THE INTENT OF THE DESIGN OR THE CONSTRUCTION TECHNIQUES OR DETAILS SHOWN HEREIN ARE NOT ADHERED TO OR THE CONTRACTUAL AGREEMENT GOVERNING THEIR USE ARE NOT STRICTLY ADHERED TO.

JOB NO: 2316
DATE: JULY 2025
DRWN. BY: ET
CHKD. BY: RCC

REVISIONS

STATE OF LOUISIANA
R. CRAIG CAMPBELL, II
License No. 20380
PROFESSIONAL ENGINEER

GREATER ST MARY MISSIONARY BAPTIST
1401 MOELING STREET
LAKE CHARLES, LA 70601
MINISTRY CENTER

ADG ENGINEERING
ASSOCIATED DESIGN GROUP, INC.
3909 W Congress Street, Suite 201
Lafayette, Louisiana 70506
Phone: (337) 234-5710
Email: adginc@adginc.org
Project No. 24232

ENLARGED PLUMBING PLANS

ALTERNATE #1

MC-P-301

PLUMBING FIXTURE SCHEDULE

MARK DESCRIPTION	MFGR	SERVICES WASTE	VENT	HW	CW	REMARKS
WC–A WATER CLOSET FLUSH VALVE	KOHLER SLOAN CHURCH	4"	3"	––	1"	KOHLER K–4350: 15" HIGH WHITE, VITREOUS CHINA, SIPHON JET ACTION FLOOR MOUNT WATER CLOSET WITH ELONGATED BOWL AND 1–1/2" TOP SPUD AND BOLT CAPS. PROVIDE CHURCH MODEL 295C WHITE OPEN FRONT SEAT/LESS COVER WITH STAINLESS STEEL CHECK HINGE, SLOAN REGAL 111–1.6 FLUSH VALVE.
WC–B WATER CLOSET FLUSH VALVE ADA	KOHLER SLOAN CHURCH	4"	3"	––	1"	KOHLER K–4368: 17" HIGH WHITE, VITREOUS CHINA, ELONGATED BOWL, SIPHON JET, 1.6 GAL FLUSH, 10" ROUGH–IN, FLOOR MOUNT WATER CLOSET WITH ELONGATED BOWL AND 1–1/2" BRASS TOP SPUD, CHURCH 295C ELONGATED OPEN FRONT SEAT WITH CONCEALED 300 SERIES STAINLESS STEEL CHECK HINGES, AND SLOAN REGAL 111 XL 1.6 GALLON FLUSH VALVE WITH VACUUM BREAKER FLUSH CONNECTION.
U–A URINAL	KOHLER SLOAN	2"	2"	––	3/4"	KOHLER K–4904–ET: WHITE, VITREOUS CHINA, SIPHON JET ACTION URINAL W/ 3/4" TOP SPUD. BEEHIVE STRAINER. SLOAN REGAL 186–1 (1.0 GALLON) FLUSH VALVE. COORDINATE MOUNTING HEIGHT WITH ARCHITECTURAL DRAWINGS TO COMPLY WITH ADA REQUIREMENTS. PROVIDE FLOOR MOUNTED CARRIER.
L–A LAVATORY COUNTERTOP ADA	KOHLER – K–2196 – K–7443–5A WATTS – LFUSG–B–M2 TRUEBRO – 102 LAVGUARD	2"	2"	1/2"	1/2"	WHITE VITREOUS CHINA SELF–RIMMING COUNTERTOP LAVATORY WITH 8" CENTERS. WIDESPREAD FAUCET WITH WRIST BLADE HANDLES AND GRID DRAIN W/ PERFORATED STRAINER AND TAILPIECE, 1–1/4" 17 GA. CAST BRASS P–TRAP WITH CLEANOUT PLUG, 3/8" ANGLE SUPPLIES WITH STOPS. INSULATE P–TRAP AND WATER SUPPLIES. PROVIDE ASSE 1070 THERMOSTATIC MIXING VALVE UNDER LAVATORY. REFER TO ARCHITECTURAL DRAWINGS FOR MOUNTING HEIGHT.
SK–B HANDWASH KITCHEN	ELKAY – CHS–1716 LEONARD – 170D–LF	2"	2"	1/2"	1/2"	WALL HUNG TYPE 304 STAINLESS STEEL HAND SINK WITH 7" BACKSPLASH, WALL HANGER AND INTEGRAL STAINLESS STEEL SUPPORT BRACKETS, LK–393 CHROME PLATED GOOSENECK SPOUT FAUCET WITH (1.5 GPM) AERATOR, LK–8 DRAIN FITTING, LK–500 SATIN CHROME TUBING P–TRAP WITH CLEANOUT, WASTE ARM TO WALL AND WALL FLANGE. PROVIDE ANGLE SUPPLIES WITH STOPS. INSULATE P–TRAP, HOT AND COLD WATER SUPPLIES WITH TRUEBRO 102 LAVGUARD. PROVIDE ASSE 1070 THERMOSTATIC MIXING VALVE MOUNTED ON WALL UNDER LAVATORY.
SK–C SINK 3–COMP CONCESSION	ELKAY – 14–3C16X20–OX T & S – B–0133–EE–B – LK945DS20L2T	2"	2"	3/4"	3/4"	57"X 25–13/16" X 43–3/4" 16 GAUGE TYPE 300 STAINLESS STEEL 3 COMPARTMENT SINK WITH 8" HIGH BACKSPLASH AND STAINLESS STEEL LEGS, (3) LK ROTARY LEVER OPERATED DRAIN OUTLET FITTINGS FOR 3–1/2" OPENING, STAINLESS STEEL FLANGE WITH BRASS BODY, STAINLESS STEEL PERFORATED GRID, C.P. BRASS 1–1/2" O.D., 4" TAIL PIECE AND STAINLESS STEEL LEVER ARM. FAUCETS SHALL BE (1) CHROME PLATED PRE–RINSE BACK MOUNT SWING SPOUT FAUCET WITH LEVER HANDLES, 24" RISER PIPE SUPPORT, 38" PROTECTED STAINLESS STEEL FLEXIBLE HOSE SPRAY WITH BUILD IN CHECK HINGE (0.65 GPM), (1) CHROME PLATED BACK MOUNT SINK FAUCET WITH LEVER HANDLES, 18" D.J. SWING SPOUT WITH AE13A 2.2 GPM AERATOR AND LK–76 CONTINUOUS WASTE AND EXTEND TO FLOOR SINK WITH AIR GAP.
SH–A SHOWER	TILE SHOWER BY ARCHITECT LEONARD – 76–1A	3"	2"	3/4"	3/4"	SINGLE HANDLE THERMOSTATIC AND PRESSURE BALANCING MIXING SHOWER VALVE, VACUUM BREAKER, WALL BRASS SHOWER HEAD (1.5 GPM).
TV	WATTS – LFUSG–B–M2	––	––	––	––	ASSE 1070 THERMOSTATIC MIXING VALVE MOUNTED ON WALL UNDER LAVATORY/SINK
HB–A HOSE BIBB	WOODFORD	––	––	––	3/4"	WOODFORD 24P–3/4: ANTI–SIPHON VACUUM BREAKER, PROTECTED WALL FAUCET WITH 3/4" HOSE THREAD, BRASS CONSTRUCTION, TEE KEY HANDLE.
FD–A FLOOR DRAIN	WADE	3"	2"	––	––	WADE 1100STD: CAST IRON FLOOR DRAIN W/ FLANGE, INTEGRAL CLAMPING COLLAR, SEEPAGE OPENING, ADJUSTABLE 6" DIA. NICKEL BRONZE STRAINER W/ SQUARE PERFORATIONS, P–TRAP.
FD–B FLOOR DRAIN RECESSED GRATE	WADE	3"	2"	––	––	WADE 1100ER: CAST IRON FLOOR DRAIN W/ FLANGE, INTEGRAL CLAMPING COLLAR, SEEPAGE OPENING, ADJUSTABLE 7" DIA., NICKEL BRONZE EXTENDED RIM STRAINER W/ SQUARE PERFORATIONS, P–TRAP. PROVIDE A PRO SET TRAP PRIMER IN DRAIN.
FS FLOOR SINK	ZURN – Z1901	3"	2"	–	–	12"X12" CAST IRON 8" DEEP FLOOR SINK W/ ACID–RESISTING PORCELAIN ENAMELED INTERIOR, CLAMPING DEVICE, FULL NICKEL BRONZE GRATE WITH CENTER OPENING, BOTTOM OUTLET AND ALUMINUM INTERNAL DOME STRAINER. TOP OF FLOOR SINK SHALL BE FLUSH TO FINISHED FLOOR. PROVIDE FUNNEL. COORDINATE FINAL LOCATION WITH EQUIPMENT.
IMB ICE MAKER BOX	GUY GRAY – BIM875	––	––	––	1/2"	PROVIDE 3/8" ANGLE SUPPLY WITH STOP IN 20 GA. METAL RECESSED FLUSH MOUNTED BOX. MOUNT AT 12" A.F.F.
WMB WASHING MACHINE BOX	GUY GRAY – B200	2"	2"	3/4"	3/4"	RECESSED GALVANIZED STEEL WASHING MACHINE VALVE BOX WITH 3/4" HOT & COLD WATER THREADED SUPPLIES WITH SHUTOFFS AND 2" DRAIN.
FCO FLOOR CLEANOUT	WADE	LINE SIZE	––	––	––	WADE 6000: CAST IRON FLOOR CLEANOUT WITH ROUND ADJUSTABLE SCORIATED SECURED NICKEL BRONZE TOP. COORDINATE TOP STYLE WITH FINISHED FLOOR MATERIAL (CARPET, TILE, ETC.).
ECO EXTERIOR CLEANOUT	JONES STEPHENS	LINE SIZE	––	––	––	JONES STEPHENS S36–008: CAST IRON FRAME AND COVER MARKED "SEWER CLEANOUT". PROVIDE AS DETAILED IN CONCRETE SLAB.
HWCP HOT WATER CIRCULATING PUMP	GRUNDFOS – UP15–42SF	––	––	––	––	IN–LINE CIRCULATOR PUMP WITH BRONZE BODY AND BRASS IMPELLER, MECHANICAL SEAL, BRONZE SLEEVE, OIL LUBRICATED BEARING, FLEXIBLE COUPLER, UL LISTED DRIP PROOF 1/25 HP MOTOR WITH VOLTAGE TO BE 120–1–60. COORDINATE WITH ELECTRICAL.

GAS FIRED TANKLESS WATER HEATER SCHEDULE

UNIT No	LOCATION	STORAGE GAL	BTUH INPUT	ELEC. SERVICE	MFGR MODEL NO.
IWH–1	EXTERIOR MULTI PURPOSE BLDG	TANKLESS	199,000	120–1–60	NORTIZ NCC199CDV–NG ; WATTS PLT–5 EXPANSION TANK. (REFER TO DETAIL)
IWH–2	EXTERIOR MULTI PURPOSE BLDG	TANKLESS	199,000	120–1–60	NORTIZ NCC199CDV–NG ; WATTS PLT–5 EXPANSION TANK. (REFER TO DETAIL)
IWH–3	EXTERIOR MULTI PURPOSE BLDG	TANKLESS	199,000	120–1–60	NORTIZ NCC199CDV–NG ; WATTS PLT–5 EXPANSION TANK. (REFER TO DETAIL)
IWH–4	EXTERIOR MULTI PURPOSE BLDG	TANKLESS	199,000	120–1–60	NORTIZ NCC199CDV–NG ; WATTS PLT–5 EXPANSION TANK. (REFER TO DETAIL)

* PROVIDE CONDENSATE NEUTRALIZATION SYSTEM.

** PROVIDE DIRECT COMBUSTION AIR. COORDINATE WITH MECHANICAL CONTRACTOR.

APPROVED EQUALS: THE FOLLOWING MANUFACTURERS OF PLUMBING FIXTURES AND DRAINS OF COMPARABLE QUALITY TO THOSE ITEMS SPECIFIED ARE CONSIDERED APPROVED EQUALS SUBJECT TO COMPLIANCE WITH REQUIREMENTS OF THE INDIVIDUAL SPECIFICATIONS.

PLUMBING FIXTURES:	AMERICAN STANDARD, MANSFIELD, SLOAN, TOTO, ZURN, ACORN
DRAINS, CLEANOUTS, CARRIERS:	JOSAM, J.R. SMITH, MIFAB, WATTS, ZURN
SINKS:	ADVANCE TABCO, GRIFFIN, JUST. ACORN
SERVICE SINKS:	ACORN, FLORSTONE, MUSTEE, STERN WILLIAMS
ELECTRIC WATER COOLER:	ACORN, HAWS, HALSEY TAYLOR, OASIS
FLUSH VALVES:	ZURN
FAUCETS:	CHICAGO, DELTA COMMERCIAL, MOEN COMMERCIAL, SPEAKMAN, T & S, ZURN
WATER HEATERS:	A.O. SMITH, STATE
OTHER MANUFACTURERS:	SUBMIT FOR PRIOR APPROVAL.

KING architects INC.
Barry D. King, AIA,
Architect
1312 Sampson St.
Westlake, LA 70669
337.494.0806
www.kingarchitects.net

© COPYRIGHT 2022
ALL INFORMATION, EITHER DRAWN, WRITTEN, OR IMPLIED APPEARING IN THIS DOCUMENT SHALL NOT BE DUPLICATED, DISCLOSED, OR OTHERWISE USED WITHOUT THE WRITTEN PERMISSION OF BARRY D. KING AIA. THIS DOCUMENT IS AN INSTRUMENT OF SERVICE AND IS THE SOLE PROPERTY OF THE AUTHOR. FURTHERMORE, THE USE OF THIS DOCUMENT FOR ANY PURPOSE SHALL BE REVOKED, IF THE INTENT OF THE DESIGN OR THE CONSTRUCTION TECHNIQUES OR DETAILS SHOWN HEREIN ARE NOT ADHERED TO OR THE CONTRACTUAL AGREEMENT GOVERNING THEIR USE ARE NOT STRICTLY ADHERED TO.

JOB NO: 2316
DATE: JULY 2025
DRWN. BY: ET
CHKD. BY: RCC

REVISIONS

STATE OF LOUISIANA
R. CRAIG CAMPBELL, II
License No. 29350
8/1/25
PROFESSIONAL ENGINEER

GREATER ST MARY MISSIONARY BAPTIST
1401 MOELING STREET
LAKE CHARLES, LA 70601
MINISTRY CENTER

ADG ENGINEERING
ASSOCIATED DESIGN GROUP, INC.
3909 W Congress Street, Suite 201
Lafayette, Louisiana 70506
Phone: (337) 234-5710
Email: adginc@adginc.org
Project No. 24232

PLUMBING SCHEDULES

ALTERNATE #1

MC-P-400

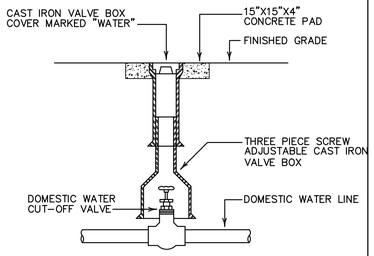

1 WATER VALVE BOX DETAIL
NO SCALE

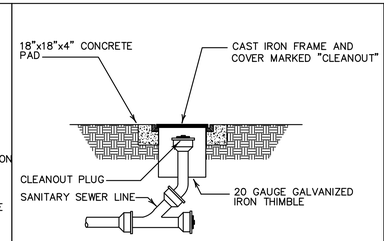

2 EXTERIOR CLEANOUT DETAIL
NO SCALE

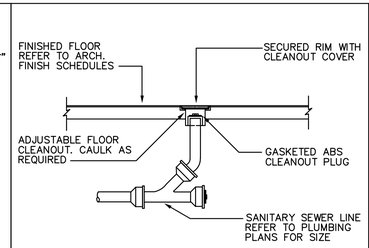

3 FLOOR CLEANOUT DETAIL
NO SCALE

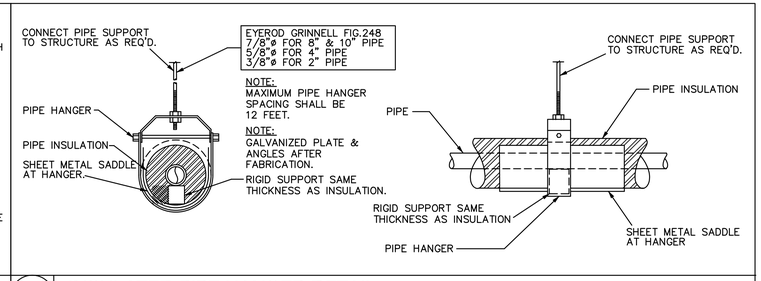

4 INSULATED PIPE HANGER DETAIL
NO SCALE

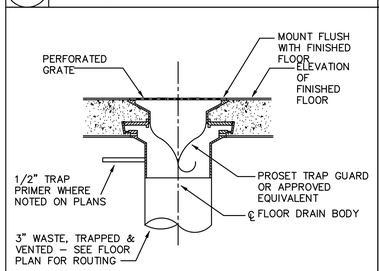

5 FLOOR DRAIN "FD-A" DETAIL
NO SCALE

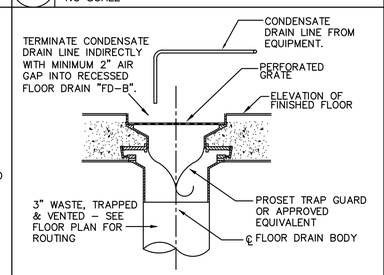

6 FLOOR DRAIN "FD-B" DETAIL
NO SCALE

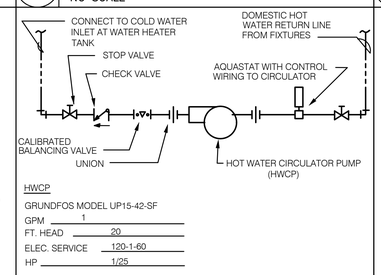

7 HOT WATER CIRCULATION SYSTEM PIPING (HWCP)
NO SCALE

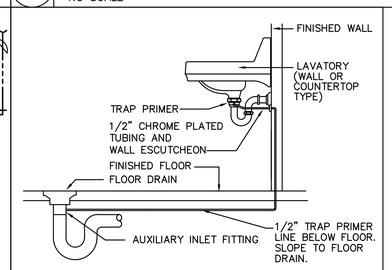

8 TRAP PRIMER DETAIL
NO SCALE

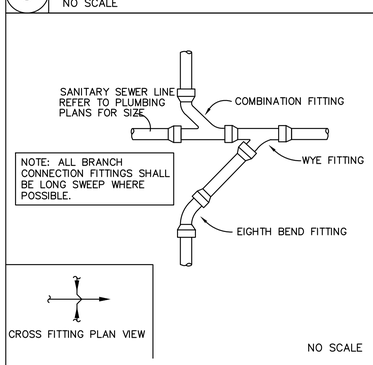

NO SCALE

9 SANITARY SEWER CROSS INSTALLATION METHOD CONNECTION DETAIL (TYPICAL)

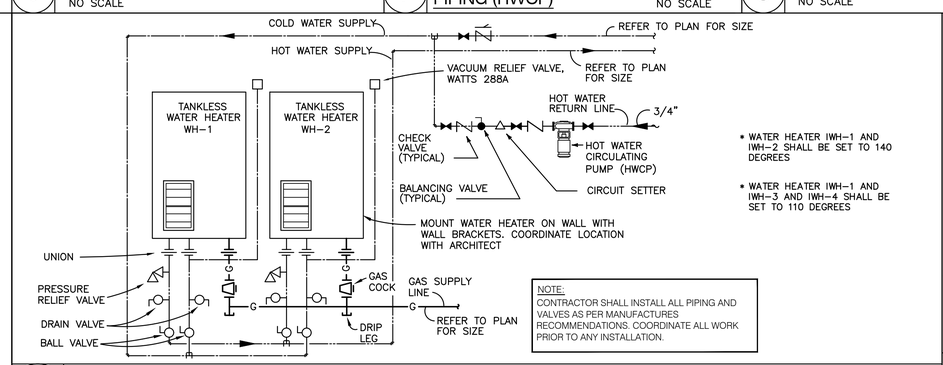

* WATER HEATER IWH-1 AND IWH-2 SHALL BE SET TO 140 DEGREES
* WATER HEATER IWH-1 AND IWH-3 AND IWH-4 SHALL BE SET TO 110 DEGREES

10 WATER HEATER PIPING DETAIL
NO SCALE

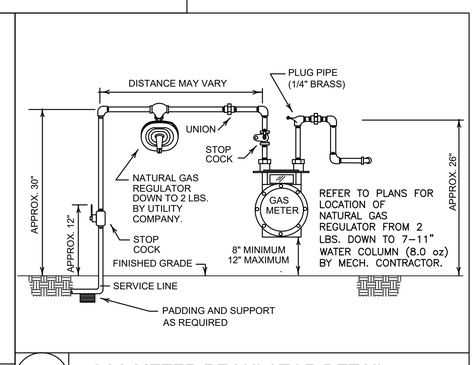

11 GAS METER/REGULATOR DETAIL
NO SCALE

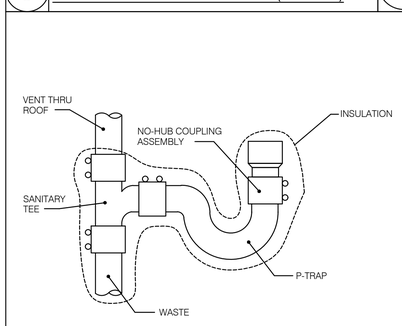

12 HUB DRAIN "HD" DETAIL
NO SCALE

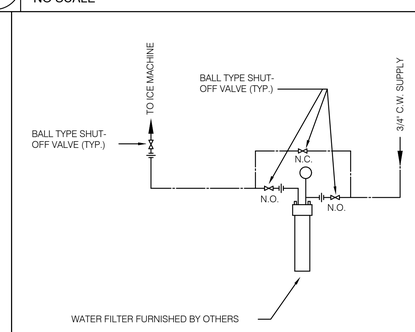

13 ICE MAKER WATER FILTER DETAIL
NO SCALE

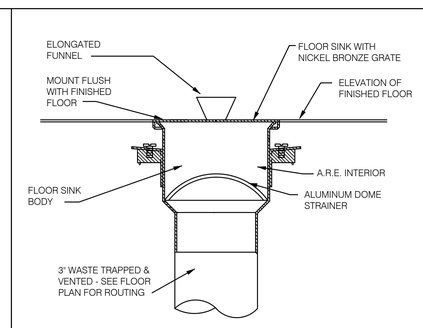

14 FLOOR SINK "FS" DETAIL
NO SCALE

KING architects INC.
Barry D. King, AIA,
Architect
1312 Sampson St.
Westlake, LA 70669
337.494.0806
www.kingarchitects.net

© COPYRIGHT 2022
ALL INFORMATION, EITHER DRAWN, WRITTEN, OR IMPLIED APPEARING IN THIS DOCUMENT SHALL NOT BE DUPLICATED, DISCLOSED, OR OTHERWISE USED WITHOUT THE WRITTEN PERMISSION OF BARRY D. KING AIA. THIS DOCUMENT IS AN INSTRUMENT OF SERVICE AND IS THE SOLE PROPERTY OF THE AUTHOR. FURTHERMORE, THE USE OF THIS DOCUMENT FOR ANY PURPOSE SHALL BE REVOKED, IF THE INTENT OF THE DESIGN OR THE CONSTRUCTION TECHNIQUES OR DETAILS SHOWN HEREIN ARE NOT ADHERED TO OR THE CONTRACTUAL AGREEMENT GOVERNING THEIR USE ARE NOT STRICTLY ADHERED TO.

JOB NO: 2316
DATE: JULY 2025
DRWN. BY: ET
CHKD. BY: RCC

REVISIONS

STATE OF LOUISIANA
R. CRAIG CAMPBELL, II
License No. 29380
8/1/25
PROFESSIONAL ENGINEER

GREATER ST MARY MISSIONARY BAPTIST
1401 MOELING STREET
LAKE CHARLES, LA 70601
MINISTRY CENTER

ADG ENGINEERING
ASSOCIATED DESIGN GROUP, INC.
3909 W Congress Street, Suite 201
Lafayette, Louisiana 70506
Phone: (337) 234-5710
Email: adginc@adginc.org

Project No. 24232

PLUMBING DETAILS

ALTERNATE #1

MC-P-401

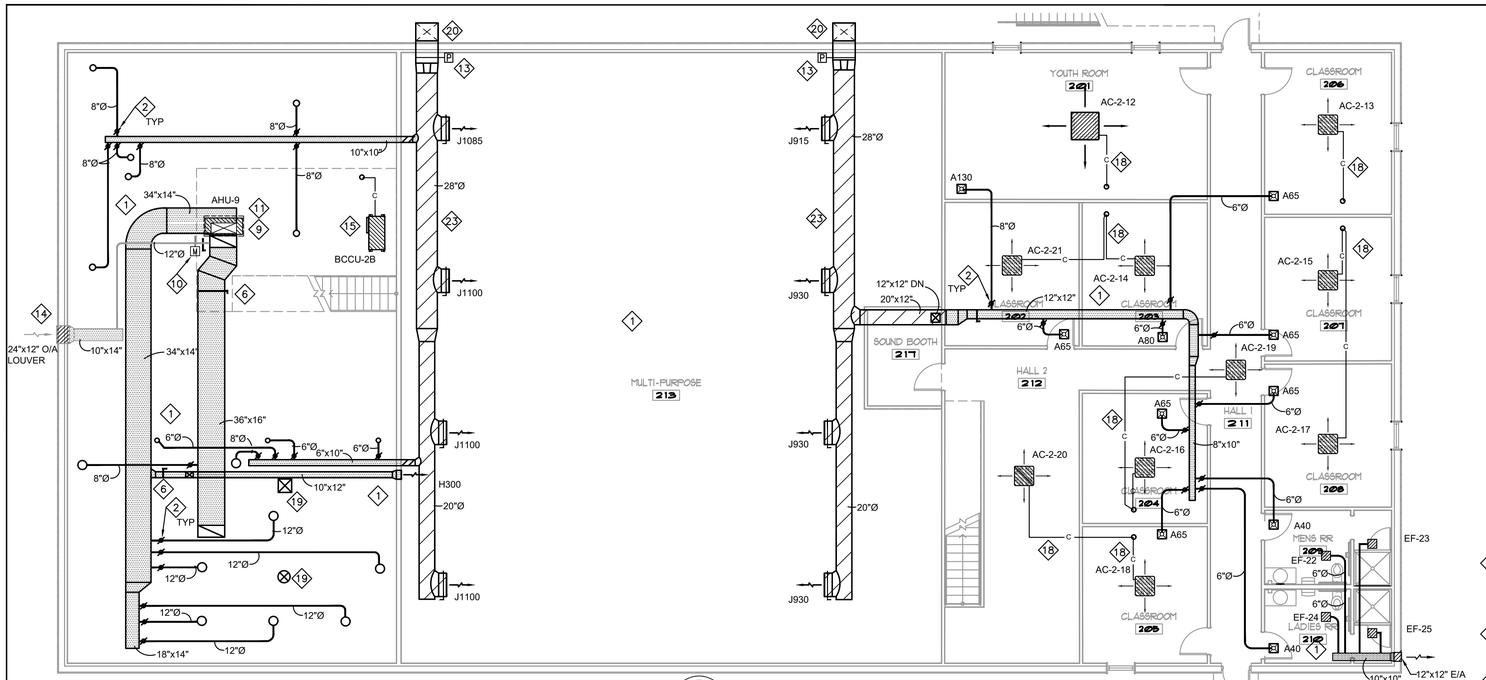

2 HVAC PLAN - 2ND FLOOR

SCALE: 1/8" = 1'-0" REFER TO ARCHITECTURAL PLANS FOR DIMENSIONS

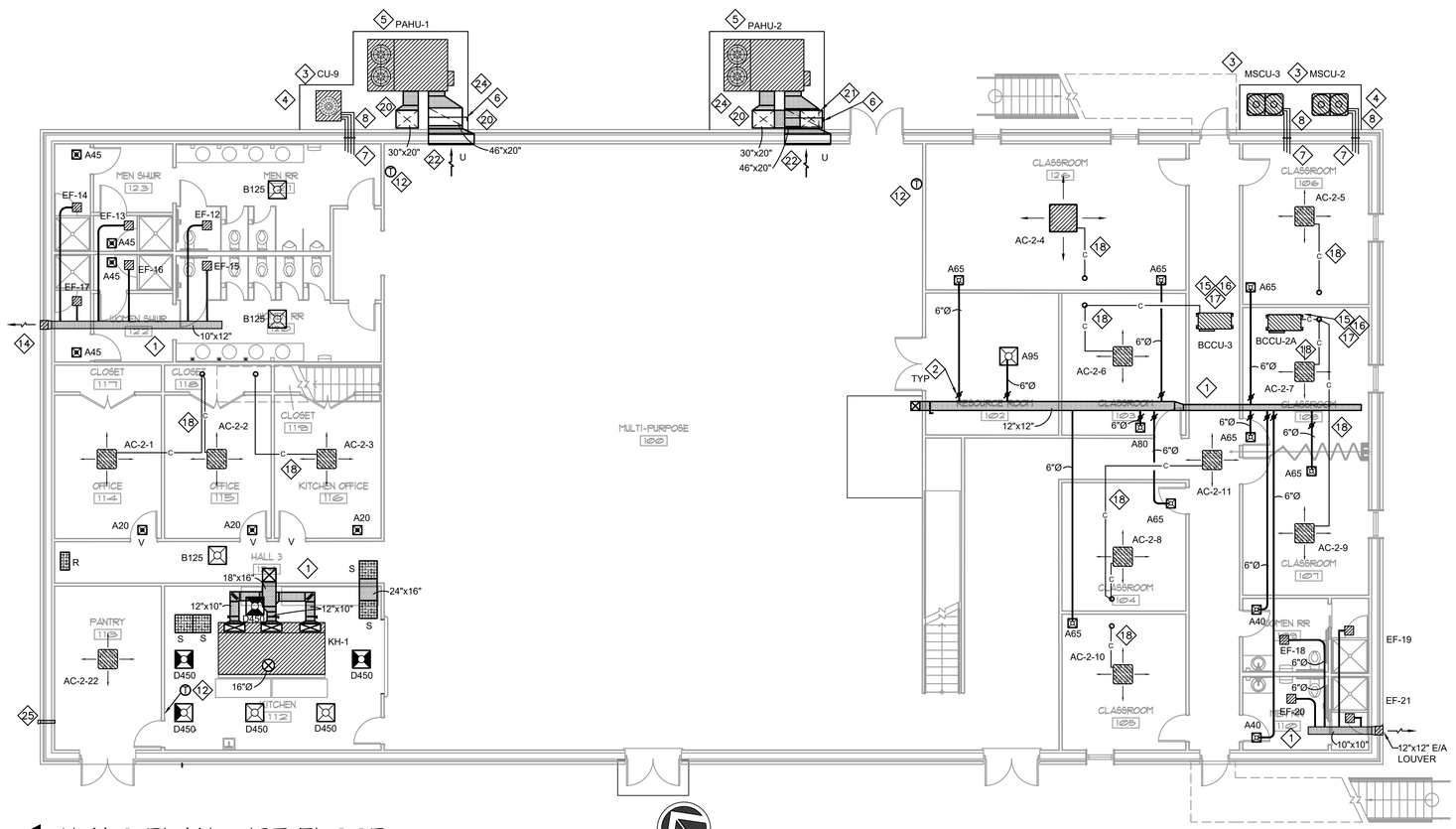

1 HVAC PLAN - 1ST FLOOR

SCALE: 1/8" = 1'-0" REFER TO ARCHITECTURAL PLANS FOR DIMENSIONS

GENERAL NOTES:

A. ALL WORK SHALL COMPLY WITH LOCAL, STATE & FEDERAL CODES TO SATISFACTION OF CODE AUTHORITIES HAVING JURISDICTION.

B. COORDINATE ALL CEILING DEVICES, DUCTWORK, PIPEWORK, ETC. WITH LIGHTING, STRUCTURE, ETC. THROUGH GENERAL CONTRACTOR. REFER TO ALL DRAWINGS, (PLUMBING, ELECTRICAL, ARCHITECTURAL, ETC.). NOTIFY ARCHITECT/ ENGINEER CONCERNING ANY CONFLICTS NOTED PRIOR TO BIDS, FOR CLARIFICATION TO SATISFACTION OF BIDDER. REFER TO SPECIFICATIONS SECTION 23 FOR REQUIREMENTS. REFER TO LATEST ARCHITECTURAL REFLECTED CEILING PLAN. COORDINATE DEVICE LOCATION WITH CEILING GRID.

C. CONTRACTOR SHALL SEAL ALL PIPING AND DUCT PENETRATIONS THROUGH WALLS AND FLOORS AS PER THE RATED UL DESIGNATION'S REQUIREMENTS. REFER TO ARCHITECTURAL PLANS FOR ALL UL RATINGS.

D. PROVIDE ACCESS PANELS PER SPECIFICATIONS TO ACCESS ALL DEVICES REQUIRING MAINTENANCE/ADJUSTMENT WHERE NECESSARY. COORDINATE WITH ARCHITECTURAL FINISH SCHEDULE.

E. CONTRACTOR SHALL CAP AND SEAL ALL DUCTWORK DURING CONSTRUCTION TO PREVENT CONTAMINATION DUE TO CONSTRUCTION DEBRIS.

F. ALL VALVES, DAMPERS, ACCESS PANELS, ETC SHALL BE INSTALLED FOR MAXIMUM ACCESSIBILITY.

E. ALL SUPPLY, RETURN, EXHAUST AND OUTSIDE AIR DUCTWORK THIS SHEET SHALL BE EXTERNALLY INSULATED UNLESS SHOWN OTHERWISE. DUCT SIZES SHOWN ARE CLEAR METAL TO METAL. WRAP DUCTWORK EXTERNALLY.

F. PROGRAMMABLE THERMOSTAT SHALL REMAIN IN FAN "AUTO" MODE.

MECHANICAL KEYNOTES:

1. RUN MAIN TRUNKLINES APPROXIMATELY AS SHOWN. COORDINATE EXACT LOCATION WITH STRUCTURE, PIPING, CONDUIT, DEVICES ABOVE CEILING, ETC. MAKE ALL REQUIRED OFFSETS, TRANSITIONS, ETC. (MAINTAIN EQUIVALENT DUCT FREE AREA IN TRANSITIONS). RUN DUCTWORK TO MINIMIZE OFFSETS, CHANGES IN ELEVATION, TRANSITIONS, ETC. COORDINATE WITH OTHER TRADES. (TYPICAL)
2. INSTALL MANUAL DAMPER AT DUCT TAP SPIN FITTING ABOVE LAY-IN CEILING AND BALANCE TO CFM INDICATED AT GRILLE. DUCT TAPS SHALL BE A MINIMUM OF 12" FROM END OF SUPPLY AIR DUCT. (TYPICAL)
3. CONDENSING UNITS SHALL BE INSTALLED SO THAT RUN-OFF WATER FROM ROOF DOES NOT POUR DIRECTLY ONTO UNIT. (TYPICAL).
4. MOUNT CONDENSING UNIT ON 4" HIGH CONCRETE HOUSEKEEPING PAD. (CONCRETE PAD BY GENERAL CONTRACTOR). SLOPE PAD AWAY FROM BUILDING.
5. INSTALL NEW PACKAGED UNIT WITH HORIZONTAL DISCHARGE WHERE INDICATED ON A 4" CONCRETE PAD. UNIT SHALL BE EQUIPPED WITH OUTSIDE AIR INTAKE HOOD AND MOTORIZED DAMPER. VERIFY PROPER MAINTENANCE ACCESS PER MANUFACTURER'S RECOMMENDATION PRIOR TO ORDERING. SLOPE ALL DUCTWORK AWAY FROM THE BUILDING AND PAHU'S TO PREVENT WATER FROM REMAINING ON TOP OF DUCT.
6. PROVIDE A MANUAL BALANCING DAMPER IN RETURN/SUPPLY AIR DUCT (TYPICAL).
7. REFRIGERANT PIPING PENETRATES WALL TO RESPECTIVE AIR HANDLING UNIT. SEAL WALL PENETRATION AIR AND WATER TIGHT. CONTRACTOR SHALL COORDINATE WITH MANUFACTURER AND INSTALL REFRIGERANT PIPE IN ACCORDANCE TO MANUFACTURER'S RECOMMENDATIONS. PROVIDE SUCTION LINE ACCUMULATOR AND SOLENOID VALVE AS PER MANUFACTURERS RECOMMENDATION. MANUFACTURER SHALL SUBMIT RECOMMENDED REFRIGERANT LIQUID AND SUCTION LINE SIZES AND ACCESSORIES DURING SHOP DRAWINGS. (TYPICAL)
8. PROVIDE REFRIGERANT PIPING SUPPORTS AS REQUIRED.
9. INSTALL AIR HANDLER UNIT, ON PRIMED AND PAINTED ANGLE IRON FRAME, IN AN EMERGENCY DRAIN PAN. EMERGENCY DRAIN PAN SHALL EXTEND 6" ALL AROUND PERIMETER OF ALL UNITS WITH A 3/4" INSULATED COPPER DRAIN PIPE WITH BALL VALVE (NC) AND EXTEND TO CONDENSATE DRAIN PIPE. PROVIDE FLOAT SWITCH AND INTERLOCK WITH AHU FAN MOTOR. LOCATE UNIT DISCONNECT IN ACCESSIBLE LOCATION WITH REQUIRED CLEARANCES. COORDINATE WITH ARCHITECT AND ELECTRICAL CONTRACTOR.
10. PROVIDE A 120/1/60 ELECTRIC MOTORIZED DAMPER AND MANUAL BALANCING DAMPER IN OUTSIDE AIR DUCT THIS VICINITY. INTERLOCK MOTORIZED DAMPER TO RESPECTIVE A/C UNIT TO OPEN WHEN UNIT IS HEATING OR COOLING AND CLOSE WHEN UNIT IS NOT. PROVIDE ALL RELAY'S, WIRING, ETC. REQUIRED FOR PROPER OPERATION. INSTALL MOTORIZED DAMPER IN AN ACCESSIBLE LOCATION IN MECHANICAL ROOM. OUTSIDE AIR DUCTWORK SHALL CONNECT TO RETURN AIR DUCT AFTER THE RETURN AIR DAMPER.
11. ROUTE INSULATED CONDENSATE AND EMERGENCY DRAIN LINES TO FLOOR DRAIN AND TERMINATE WITH 2" AIR GAP.
12. INSTALL NEW 7 DAY PROGRAMMABLE THERMOSTAT AND CONTROL WIRING WHERE INDICATED.
13. PROVIDE AND INSTALL PLASMA AIR- MODEL 7001 (24V) NEEDLE POINT IONIZER AIR PURIFICATION SYSTEM IN SUPPLY DUCTWORK APPROXIMATELY WHERE SHOWN. IONIZER SHALL BE MOUNTED ON DUCTWORK UTILIZING PRE-DRILLED FLANGE AND FACTORY APPLIED GASKETS. IONIZER SHALL BE INSTALLED IN ACCESSIBLE LOCATION. MECHANICAL CONTRACTOR SHALL PROVIDE AND INSTALL 24V CONTROL WIRING TO PLASMA AIR.
14. MAINTAIN MINIMUM 10'-0" CLEARANCE BETWEEN FRESH AIR INTAKE AND EXHAUST DISCHARGE SOFFIT GRILLES.
15. BRANCH CONTROLLER SUSPENDED FROM STRUCTURE ABOVE CEILING IN THIS VICINITY. PROVIDE INSULATED DRAIN PAN BELOW BRANCH CONTROLLER, EXTENDING 4" AROUND UNIT AND VALVES. PROVIDE BALL VALVES ON EACH OUTLET REFRIGERANT LINE. RUN REFRIGERANT LINES ABOVE CEILING FROM BRANCH CONTROLLER TO RESPECTIVE INDOOR UNIT AND CONNECT. RUN INSULATED CONDENSATE DRAIN LINE FULL SIZE FROM BRANCH CONTROLLER TO HUB DRAIN AND TERMINATE. PROVIDE 2" AIR GAP BETWEEN DRAIN LINE AND HUB DRAIN. REFER TO PLUMBING PLAN FOR HUB DRAIN LOCATION. COORDINATE ACCESS TO BRANCH CONTROLLER WITH DUCTWORK, LIGHTS, ETC.
16. TYPE "K" SOFT COPPER SHALL BE USED FOR REFRIGERANT LINES FROM BRANCH CONTROLLER TO EACH VRF INDOOR UNIT OFF THAT SYSTEM (TYPICAL). CONTRACTOR SHALL ROUTE REFRIGERANT PIPING NEAT AND STRAIGHT. ALL PIPING INSULATION SHALL BE PROTECTED FROM COMPRESSION BY USE OF SHEET METAL SADDLES AT HANGER LOCATIONS. CARE SHALL BE TAKEN SO THAT INSULATION IS NOT TORN OR DAMAGED BY HANGERS.
17. PROVIDE AND INSTALL SERVICE BALL VALVE AT EACH BRANCH CONNECTION IN ACCESSIBLE LOCATION ABOVE CEILING.
18. ROUTE 1" INSULATED CONDENSATE DRAIN LINE ABOVE CEILING TO HUB DRAIN IN THIS VICINITY. TERMINATE AT HUB DRAIN WITH 2" AIR GAP. COORDINATE DRAIN LOCATION WITH PLUMBING CONTRACTOR PRIOR TO ROUGH-IN.
19. KITCHEN HOOD EXHAUST/MAKEUP AIR ROUTED UP TO FANS LOCATED ON THE ROOF. REFER TO ROOF PLAN. REFER TO SHEET MC-M-700 FOR EXHAUST AND MAKEUP AIR FANS.
20. DUCTWORK PENETRATES WALL IN THIS VICINITY. FLASH DUCT PENETRATION, AND SEAL WATER TIGHT. ALL SHEET METAL SHALL BE PAINT GRIPPED FINISH. SLOPE DUCTWORK AWAY FROM WALL TO AVOID WATER PUDDLING ON TOP OF DUCTWORK.
21. OFFSET SUPPLY DUCTWORK AS SHOWN.
22. MOUNT RETURN AIR GRILLES AT 6' ABOVE FINISHED FLOOR.
23. ALL EXPOSED SUPPLY DUCTWORK SHALL BE DOUBLE WALL, INSULATED, SPIRAL PIPE WITH PERFORATED LINER AND PAINT GRIP FINISH.
24. ALL RETURN AND SUPPLY AIR DUCTS ASSOCIATED WITH PACKAGED UNITS SHALL HAVE A RADIUS TURNS.
25. 4" ALUMINUM DRYER VENT WITH END CAP AND BACK DRAFT DAMPER.

KING architects INC.
Barry D. King, AIA,
Architect
1312 Sampson St.
Westlake, LA 70669
337.494.0806
www.kingarchitects.net

© COPYRIGHT 2022
ALL INFORMATION, EITHER DRAWN, WRITTEN, OR IMPLIED APPEARING IN THIS DOCUMENT SHALL NOT BE DUPLICATED, DISCLOSED, OR OTHERWISE USED WITHOUT THE WRITTEN PERMISSION OF BARRY D. KING AIA. THIS DOCUMENT IS AN INSTRUMENT OF SERVICE AND IS THE SOLE PROPERTY OF THE AUTHOR. FURTHERMORE, THE USE OF THIS DOCUMENT FOR ANY PURPOSE SHALL BE REVOKED, IF THE INTENT OF THE DESIGN OR THE CONSTRUCTION TECHNIQUES OR DETAILS SHOWN HEREIN ARE NOT ADHERED TO OR THE CONTRACTUAL AGREEMENT GOVERNING THEIR USE ARE NOT STRICTLY ADHERED TO.

JOB NO: 2316
DATE: JULY 2025
DRWN. BY: ET
CHKD. BY: RCC

REVISIONS

STATE OF LOUISIANA
R. CRAIG CAMPBELL, II
License No. 29350
8/1/25
PROFESSIONAL ENGINEER

GREATER ST MARY MISSIONARY BAPTIST
1401 MOELING STREET
LAKE CHARLES, LA 70601
MINISTRY CENTER

ADG ENGINEERING
ASSOCIATED DESIGN GROUP, INC.
3909 W Congress Street, Suite 201
Lafayette, Louisiana 70506
Phone: (337) 234-5710
Email: adginc@adginc.org
Project No. 24232

HVAC PLAN

ALTERNATE #1

MC-M-200

PACKAGED A/C UNIT SCHEDULE

UNIT				FAN				COOLING							HEATING							
UNIT No.	SERVICE	UNIT MCA / MOCP	ELECTRIC SERVICE	MIN CFM	CFM FA	EXT S.P.	FAN HP	TOTAL BTUH CAPACITY	ENT (° F) DB	ENT (° F) WB	LAT (° F) DB	LAT (° F) WB	AMB TEMP °F	EVAP TEMP °F	HEATING OUTPUT (BTUH)	K.W. ELEC. STRIP MIN.	K.W. ELEC. STRIP MAX.	No. STAGES	AIR TEMP (° F) ENT	AIR TEMP (° F) LEAV	ELECTRIC SERVICE	REMARKS
PAHU-1 *	MULTI-PURPOSE	155 / 175	208/3/60	5,000	750	0.75"	3	140,000	78.5	62.5	55.0	54.0	95	40	136,400	40.5		2	63.3	88.5	208/3/60	TRANE MODEL TSH150 OR APPROVED EQUAL **
PAHU-2 *	MULTI-PURPOSE	155 / 175	208/3/60	5,000	750	0.75"	3	140,000	78.5	62.5	55.0	54.0	95	40	136,400	40.5		2	63.3	88.5	208/3/60	TRANE MODEL TSH150 OR APPROVED EQUAL **

* AHU SHALL BE INTERNALLY FUSED AND WIRED FOR SINGLE POINT CONNECTION.
** AHU SHALL HAVE THE FOLLOWING OPTIONS: MOTORIZED OUTSIDE AIR DAMPER (0-25%), DUAL COMPRESSORS.
**** PROVIDE A IMC450A+ PLUS PROGRAMMABLE THREE PHASE VOLTAGE MONITOR WITH 25 FAULT MEMORY ON ALL EQUIPMENT REQUIRING THREE PHASE ELECTRICAL.

AIR CONDITIONING UNIT SCHEDULE

FAN							COOLING							HEATING								
NO.	SERVICE	MIN. C.F.M.	C.F.M. F.A.	EXT. S.P.	FAN H.P.	ELECTRIC SERVICE	MIN. B.T.U.H. OUTPUT	EVAP. TEMP. (°F)	AMB. TEMP. (°F)	ENT. TEMP. D.B. °F	ENT. TEMP. W.B. °F	LAT. TEMP. D.B. °F	LAT. TEMP. W.B. °F	MIN. B.T.U.H. OUTPUT	K.W. ELEC. STRIP MIN.	K.W. ELEC. STRIP MAX.	NO. STAGES	ENT. AIR (°F)	LEAV. AIR (°F)	ELECTRIC SERVICE	REMARKS	NOTES
AHU-9	MULTI-PURPOSE BUILDING KITCHEN	3000	400	1"	1	208/1/60	90,000	40.0	95.0	75.2	63.4	55.0	54.0	78,636	23.04		2	64.0	88.3	208/3/60	TRANE MODEL TWE090 OR APPROVED EQUAL	1,2

1. ALL AIR HANDLING UNITS SHALL BE INTERNALLY FUSED FOR SINGLE POINT CONNECTION. PROVIDE INTEGRAL DISCONNECT.
2. OUTSIDE AIR MOTORIZED DAMPER SHALL BE INTERLOCKED WITH RESPECTIVE AIR HANDLER UNIT TO OPEN WHEN UNIT IS HEATING OR COOLING

AIR COOLED CONDENSING UNIT SCHEDULE

UNIT No	SERVICE	BTUH COOLING OUTPUT	EVAP TEMP	AMBIENT TEMP	FULL LOAD AMPS	ELECTRIC SERVICE	S.E.E.R.	REMARKS	NOTES
CU-9	AHU-9	90,000	40.0	95.0	29.3	208/3/60	14	TRANE MODEL TTA090 OR APPROVED EQUAL	1,2

1. PROVIDE LOW AMBIENT CONTROLS
2. PROVIDE A IMC450 PROGRAMMABLE THREE PHASE VOLTAGE MONITOR WITH 25 FAULT MEMORY ON ALL EQUIPMENT REQUIRING THREE PHASE ELECTRICAL.

GRILLE SCHEDULE

SYMBOL	SIZE	SERVICE	LOCATION	FINISHED	REMARKS
A	6"ø/24"X24"	SUPPLY	CEILING	W.B.E.	TITUS TMSA-AA OR APPROVED EQUAL
B	8"ø/24"X24"	SUPPLY	CEILING	W.B.E.	TITUS TMSA-AA OR APPROVED EQUAL
D	12"ø/24"X24"	SUPPLY	CEILING	W.B.E.	TITUS TMSA-AA OR APPROVED EQUAL
J	24"X12"	SUPPLY	DUCT	ALUM.	TITUS 300FS OR APPROVED EQUAL
R	24"X12"	RETURN	CEILING	W.B.E.	TITUS 50FF (LAY IN) OR APPROVED EQUAL
S	24"X24"	RETURN	CEILING	W.B.E.	TITUS 50FF (LAY IN) OR APPROVED EQUAL
U	48"X30"	RETURN	SIDEWALL	ALUM.	TITUS 350FL OR APPROVED EQUAL

* PROVIDE FACTORY APPLIED INSULATION ON TOP OF DIFFUSER. DIFFUSER SHALL HAVE ADJUSTABLE AIR PATTERN.
** PROVIDE INSULATED SQUARE TO ROUND ADAPTER.

FAN SCHEDULE

No	SERVICE	MIN. CFM	EXT. SP	RPM	SONES	FAN WATTS	TYPE	DRIVE	ELECTRIC SERVICE	CONTROL	REMARKS	NOTES
EF-12	MEN RR 121	150	.3"	1160	3	51.5 W	CEILING	DIRECT	120/1/60	OCC SENSOR W/ 15 MIN TIMER	COOK MODEL GC OR APPROVED EQUAL	1, 2, 3
EF-13	MEN SHOWER 123	50	.3"	834	1.5	32.0 W	CEILING	DIRECT	120/1/60	OCC SENSOR W/ 15 MIN TIMER	COOK MODEL GC OR APPROVED EQUAL	1, 2, 3
EF-14	MEN SHOWER 123	50	.3"	834	1.5	32.0 W	CEILING	DIRECT	120/1/60	OCC SENSOR W/ 15 MIN TIMER	COOK MODEL GC OR APPROVED EQUAL	1, 2, 3
EF-15	WOMEN RR 120	150	.3"	1160	3	51.5 W	CEILING	DIRECT	120/1/60	OCC SENSOR W/ 15 MIN TIMER	COOK MODEL GC OR APPROVED EQUAL	1, 2, 3
EF-16	WOMEN SHOWER 122	50	.3"	834	1.5	32.0 W	CEILING	DIRECT	120/1/60	OCC SENSOR W/ 15 MIN TIMER	COOK MODEL GC OR APPROVED EQUAL	1, 2, 3
EF-17	WOMEN SHOWER 122	50	.3"	834	1.5	32.0 W	CEILING	DIRECT	120/1/60	OCC SENSOR W/ 15 MIN TIMER	COOK MODEL GC OR APPROVED EQUAL	1, 2, 3
EF-18	WOMEN RR 109	25	.3"	750	1	20.6 W	CEILING	DIRECT	120/1/60	OCC SENSOR W/ 15 MIN TIMER	COOK MODEL GC OR APPROVED EQUAL	1, 2, 3
EF-19	WOMEN RR 109	25	.3"	750	1	20.6 W	CEILING	DIRECT	120/1/60	OCC SENSOR W/ 15 MIN TIMER	COOK MODEL GC OR APPROVED EQUAL	1, 2, 3
EF-20	MEN RR 110	25	.3"	750	1	20.6 W	CEILING	DIRECT	120/1/60	OCC SENSOR W/ 15 MIN TIMER	COOK MODEL GC OR APPROVED EQUAL	1, 2, 3
EF-21	MEN RR 110	25	.3"	750	1	20.6 W	CEILING	DIRECT	120/1/60	OCC SENSOR W/ 15 MIN TIMER	COOK MODEL GC OR APPROVED EQUAL	1, 2, 3
EF-22	MEN RR 209	25	.3"	750	1	20.6 W	CEILING	DIRECT	120/1/60	OCC SENSOR W/ 15 MIN TIMER	COOK MODEL GC OR APPROVED EQUAL	1, 2, 3
EF-23	MEN RR 209	25	.3"	750	1	20.6 W	CEILING	DIRECT	120/1/60	OCC SENSOR W/ 15 MIN TIMER	COOK MODEL GC OR APPROVED EQUAL	1, 2, 3
EF-24	WOMEN RR 210	25	.3"	750	1	20.6 W	CEILING	DIRECT	120/1/60	OCC SENSOR W/ 15 MIN TIMER	COOK MODEL GC OR APPROVED EQUAL	1, 2, 3
EF-25	WOMEN RR 210	25	.3"	750	1	20.6 W	CEILING	DIRECT	120/1/60	OCC SENSOR W/ 15 MIN TIMER	COOK MODEL GC OR APPROVED EQUAL	1, 2, 3

1. PROVIDE S.S.S.C. IN FAN HOUSING FOR AIR BALANCING
2. FAN SHALL HAVE W.B.E. GRILLE, BACKDRAFT DAMPER, AND MOUNTING BRACKETS.
3. CEILING MOUNTED OCCUPANCY SENSOR PROVIDED BY MECHANICAL CONTRACTOR, INSTALLED BY ELECTRICAL CONTRACTOR.

AIR BALANCE SCHEDULE

ITEM	O.A	R.A.	S.A.	E.A.	PRESSURE
PAHU-1	750	4250	5000	--	+750
PAHU-2	750	4250	5000	--	+750
EF-12	--	--	--	150	-150
EF-13	--	--	--	50	-50
EF-14	--	--	--	50	-50
EF-15	--	--	--	150	-150
EF-16	--	--	--	50	-50
EF-17	--	--	--	50	-50
EF-18	--	--	--	25	-25
EF-19	--	--	--	25	-25
EF-20	--	--	--	25	-25
EF-21	--	--	--	25	-25
EF-22	--	--	--	25	-25
EF-23	--	--	--	25	-25
EF-24	--	--	--	25	-25
EF-25	--	--	--	25	-25
TOTAL	1500	4248	10,000	700	+800

AIR BALANCE SCHEDULE

ITEM	O.A	R.A.	S.A.	E.A.	PRESSURE
AHU-9	400	2600	3000		+400
KEF-1	--	--	--	2200	-2200
MUA-2	--	--	1760		+1760
TOTAL	400	2600	4760	2200	-40

* MAKE UP AIR IS TRANSFERRED FROM PAHU-1, AND PAHU-2.

BUILDING PRESSURE SCHEDULE

ITEM	O.A	R.A.	S.A.	E.A.	PRESSURE
PAHU-1	750	4250	5000	--	+750
PAHU-2	750	4250	5000	--	+750
AHU-9	400	2600	3000		+400
EF-12	--	--	--	150	-150
EF-13	--	--	--	50	-50
EF-14	--	--	--	50	-50
EF-15	--	--	--	150	-150
EF-16	--	--	--	50	-50
EF-17	--	--	--	50	-50
EF-18	--	--	--	25	-25
EF-19	--	--	--	25	-25
EF-20	--	--	--	25	-25
EF-21	--	--	--	25	-25
EF-22	--	--	--	25	-25
EF-23	--	--	--	25	-25
EF-24	--	--	--	25	-25
EF-25	--	--	--	25	-25
KEF-1	--	--	--	2200	-2200
MUA-2	--	--	1760		+1760
TOTAL	1,900	6,880	14,760	2,900	+760

KING architects INC.
Barry D. King, AIA,
Architect
1312 Sampson St.
Westlake, LA 70669
337.494.0806
www.kingarchitects.net

© COPYRIGHT 2022
ALL INFORMATION, EITHER DRAWN, WRITTEN, OR IMPLIED APPEARING IN THIS DOCUMENT SHALL NOT BE DUPLICATED, DISCLOSED, OR OTHERWISE USED WITHOUT THE WRITTEN PERMISSION OF BARRY D. KING AIA THIS DOCUMENT IS AN INSTRUMENT OF SERVICE AND IS THE SOLE PROPERTY OF THE AUTHOR. FURTHERMORE, THE USE OF THIS DOCUMENT FOR ANY PURPOSE SHALL BE REVOKED, IF THE INTENT OF THE DESIGN OR THE CONSTRUCTION TECHNIQUES OR DETAILS SHOWN HEREIN ARE NOT ADHERED TO OR THE CONTRACTUAL AGREEMENT GOVERNING THEIR USE ARE NOT STRICTLY ADHERED TO.

JOB NO: 2316
DATE: JULY 2025
DRWN. BY: ET
CHKD. BY: RCC

REVISIONS

STATE OF LOUISIANA
R. CRAIG CAMPBELL, II
License No. 28350
8/1/25
PROFESSIONAL ENGINEER

GREATER ST MARY MISSIONARY BAPTIST
1401 MOELING STREET
LAKE CHARLES, LA 70601
MINISTRY CENTER

ADG ENGINEERING
ASSOCIATED DESIGN GROUP, INC.
3909 W Congress Street, Suite 201
Lafayette, Louisiana 70506
Phone: (337) 234-5710
Email: adginc@adginc.org

Project No. 24232

HVAC SCHEDULES

ALTERNATE #1

MC-M-300

MITSUBISHI ELECTRIC TRANE HVAC US: CITY MULTI VRF OUTDOOR UNIT SCHEDULE

System Tag	Tag Reference	M-NET Address	Model Number	Modules	Nominal Cooling Capacity (BTU/h)	Nominal Heating Capacity (BTU/h)	Design Cooling Outdoor Temp DB (°F)	Design Heating Outdoor Temp WB (°F)	Corrected Cooling Total Capacity (BTU/h)	Corrected Heating Capacity (BTU/h)	Electrical-Per Module 208/230 Voltage / Phase	MCA 208/230	RFS	MOCP	Notes / Options
MSCU-2		58	PURY-EP120TNU-A1	EP120	120,000	135,000	95.0	25.1	120,640.8	99,535.0	208/230V / 3-phase 3-wire	56/55	60/60	90/90	1, 2, 3, 4, 5
MSCU-3		70	PURY-EP120TNU-A1	EP120	120,000	135,000	95.0	25.1	121,153.8	99,627.8	208/230V / 3-phase 3-wire	56/55	60/60	90/90	1, 2, 3, 4, 5

Notes & Options:
1 Nominal cooling capacities are based on indoor coil EAT of 80/67°F (DB/WB), outdoor of 95°F (DB)
2 Nominal heating capacities are based on indoor coil EAT of 70°F (DB), outdoor of 43°F (WB)
3 Efficiency values for EER, IEER, COP are based on AHRI 1230 test method for mixture of ducted & non-ducted indoor units.
4 For systems with multiple modules, refrigerant pipe dimensions indicate total system combined piping downstream of module twinning.
5 Added field charge listed is in addition to factory charge, this must be updated based upon final as-built piping layout.

VRF HEAT RECOVERY BRANCH CIRCUIT CONTROLLER

System Tag	Tag Reference	M-NET Address	Model Number	Type (double / Main / Sub)	Number of Ports	Connected Capacity to BC	Voltage / Phase	MCA 208/230	Notes / Options
BCCU-2A		59	CMB-P1012NU-JA2	Main	12	122,000.0	208/230V/1-phase	1.19/1.39	1
BCCU-2B		66	CMB-P104NU-KB2	Sub	4	20,000.0	208/230V/1-phase	0.38/0.44	1
BCCU-3		71	CMB-P1012NU-JA2	Main	12	124,000.0	208/230V/1-phase	1.19/1.39	1

Notes & Options:
1 Include Diamondback Ball Valves BV-Series, 700PSIG working pressure, full port, 410A rated.
2 For sub BC controller CMB-P-NU-GB1 or -GB, the total connectable indoor unit capacity can be 126,000 BTUs or less. If two sub BC controllers are used, the total indoor unit capacity connected to BOTH sub BC controllers also cannot exceed 126,000 BTUs. For sub BC controller CMB-P1016NU-HB1 the total connectable indoor unit capacity can be 126,000 BTUs or less. However, if two sub controllers are used, and one of them is CMB-1016NU-HB1, the total indoor unit capacity connected to BOTH sub controllers must NOT exceed 168,000 BTUs.

MITSUBISHI ELECTRIC TRANE HVAC US: CITY MULTI VRF INDOOR UNIT SCHEDULE

System Tag	Room Name	Tag Reference	Model	Type	Nominal Cooling Capacity (BTU/h)	Nominal Heating Capacity (BTU/h)	Cooling Design Entering Temp DB/WB (°F) /	Heating Design Entering Temp DB/WB (°F) /	Corrected Capacity: Cooling Diversity Full/Partial (See Note 5, 6)	Cooling Total Capacity (BTU/h)	Cooling Sensible Capacity (BTU/h)	Heating Diversity Full/Partial (See Note 5, 6)	Heating Capacity (BTU/h)	Refrig Pipe Dim Liquid/Suction (inch)	Fan Speed Setting	Peak Fan Airflow (cfm) /	Max Fan ESP Setting 208V/230V (IN WG)	Voltage / Phase	Electrical MCA/MFS	Notes / Options
CU-2	Classroom 126	AC-2-4	PLFY-P18NFMU-ER1.TH	Ceiling-Cassette (Four-Way)	18,000	20,000	80.0/67.0	70	FULL DEMAND	17,799.5	11,818.4	FULL DEMAND	14,541.3	1/4 / 1/2	HIGH	460		208/230V/1-phase	0.5/0.5/15	1, 2, 3, 4
CU-2	Classroom 106	AC-2-5	PLFY-P12NFMU-ER1.TH	Ceiling-Cassette (Four-Way)	12,000	13,500	80.0/67.0	70	FULL DEMAND	11,866.3	8,020.8	FULL DEMAND	9,815.4	1/4 / 1/2	HIGH	335		208/230V/1-phase	0.29/0.29/15	1, 2, 3, 4
CU-2	Classroom 103	AC-2-6	PLFY-P12NFMU-ER1.TH	Ceiling-Cassette (Four-Way)	12,000	13,500	80.0/67.0	70	FULL DEMAND	11,866.3	8,020.8	FULL DEMAND	9,815.4	1/4 / 1/2	HIGH	335		208/230V/1-phase	0.29/0.29/15	1, 2, 3, 4
CU-2	Classroom 108	AC-2-7	PLFY-P12NFMU-ER1.TH	Ceiling-Cassette (Four-Way)	12,000	13,500	80.0/67.0	70	FULL DEMAND	11,866.3	8,020.8	FULL DEMAND	9,815.4	1/4 / 1/2	HIGH	335		208/230V/1-phase	0.29/0.29/15	1, 2, 3, 4
CU-2	Classroom 104	AC-2-8	PLFY-P12NFMU-ER1.TH	Ceiling-Cassette (Four-Way)	12,000	13,500	80.0/67.0	70	FULL DEMAND	11,866.3	8,020.8	FULL DEMAND	9,815.4	1/4 / 1/2	HIGH	335		208/230V/1-phase	0.29/0.29/15	1, 2, 3, 4
CU-2	Classroom 107	AC-2-9	PLFY-P12NFMU-ER1.TH	Ceiling-Cassette (Four-Way)	12,000	13,500	80.0/67.0	70	FULL DEMAND	11,866.3	8,020.8	FULL DEMAND	9,815.4	1/4 / 1/2	HIGH	335		208/230V/1-phase	0.29/0.29/15	1, 2, 3, 4
CU-2	Classroom 105	AC-2-10	PLFY-P12NFMU-ER1.TH	Ceiling-Cassette (Four-Way)	12,000	13,500	80.0/67.0	70	FULL DEMAND	11,866.3	8,020.8	FULL DEMAND	9,815.4	1/4 / 1/2	HIGH	335		208/230V/1-phase	0.29/0.29/15	1, 2, 3, 4
CU-2	Corridor	AC-2-11	PLFY-P12NFMU-ER1.TH	Ceiling-Cassette (Four-Way)	12,000	13,500	80.0/67.0	70	FULL DEMAND	11,866.3	8,020.8	FULL DEMAND	9,815.4	1/4 / 1/2	HIGH	335		208/230V/1-phase	0.29/0.29/15	1, 2, 3, 4
CU-2	Office 114	AC-2-1	PLFY-P05NFMU-ER1.TH	Ceiling-Cassette (Four-Way)	5,000	5,600	80.0/67.0	70	FULL DEMAND	4,944.3	4,362.6	FULL DEMAND	4,071.6	1/4 / 1/2	HIGH	280		208/230V/1-phase	0.24/0.24/15	1, 2, 3, 4
CU-2	Office 115	AC-2-2	PLFY-P05NFMU-ER1.TH	Ceiling-Cassette (Four-Way)	5,000	5,600	80.0/67.0	70	FULL DEMAND	4,944.3	4,362.6	FULL DEMAND	4,071.6	1/4 / 1/2	HIGH	280		208/230V/1-phase	0.24/0.24/15	1, 2, 3, 4
CU-2	Kitchen Office 116	AC-2-3	PLFY-P05NFMU-ER1.TH	Ceiling-Cassette (Four-Way)	5,000	5,600	80.0/67.0	70	FULL DEMAND	4,944.3	4,362.6	FULL DEMAND	4,071.6	1/4 / 1/2	HIGH	280		208/230V/1-phase	0.24/0.24/15	1, 2, 3, 4
CU-2	113 Pantry	AC-2-22	PLFY-P05NFMU-ER1.TH	Ceiling-Cassette (Four-Way)	5,000	5,600	80.0/67.0	70	FULL DEMAND	4,944.3	4,362.6	FULL DEMAND	4,071.6	1/4 / 1/2	HIGH	280		208/230V/1-phase	0.24/0.24/15	1, 2, 3, 4
CU-3	Youth Room 201	AC-2-12	PLFY-EP24NEMU1-E.TH	Ceiling-Cassette (Four-Way)	24,000	27,000	80.0/67.0	70	FULL DEMAND	23,449.1	16,635.9	FULL DEMAND	19,282.8	3/8 / 5/8	HIGH	812		208/230V/1-phase	0.54/0.54/15	1, 2, 3, 4
CU-3	Classroom 206	AC-2-13	PLFY-P12NFMU-ER1.TH	Ceiling-Cassette (Four-Way)	12,000	13,500	80.0/67.0	70	FULL DEMAND	11,724.6	7,960.8	FULL DEMAND	9,641.4	1/4 / 1/2	HIGH	335		208/230V/1-phase	0.29/0.29/15	1, 2, 3, 4
CU-3	Classroom 202	AC-2-21	PLFY-P12NFMU-ER1.TH	Ceiling-Cassette (Four-Way)	12,000	13,500	80.0/67.0	70	FULL DEMAND	11,724.6	7,960.8	FULL DEMAND	9,641.4	1/4 / 1/2	HIGH	335		208/230V/1-phase	0.29/0.29/15	1, 2, 3, 4
CU-3	Classroom 203	AC-2-14	PLFY-P12NFMU-ER1.TH	Ceiling-Cassette (Four-Way)	12,000	13,500	80.0/67.0	70	FULL DEMAND	11,724.6	7,960.8	FULL DEMAND	9,641.4	1/4 / 1/2	HIGH	335		208/230V/1-phase	0.29/0.29/15	1, 2, 3, 4
CU-3	Classroom 207	AC-2-15	PLFY-P12NFMU-ER1.TH	Ceiling-Cassette (Four-Way)	12,000	13,500	80.0/67.0	70	FULL DEMAND	11,724.6	7,960.8	FULL DEMAND	9,641.4	1/4 / 1/2	HIGH	335		208/230V/1-phase	0.29/0.29/15	1, 2, 3, 4
CU-3	Classroom 204	AC-2-16	PLFY-P12NFMU-ER1.TH	Ceiling-Cassette (Four-Way)	12,000	13,500	80.0/67.0	70	FULL DEMAND	11,724.6	7,960.8	FULL DEMAND	9,641.4	1/4 / 1/2	HIGH	335		208/230V/1-phase	0.29/0.29/15	1, 2, 3, 4
CU-3	Classroom 208	AC-2-17	PLFY-P12NFMU-ER1.TH	Ceiling-Cassette (Four-Way)	12,000	13,500	80.0/67.0	70	FULL DEMAND	11,724.6	7,960.8	FULL DEMAND	9,641.4	1/4 / 1/2	HIGH	335		208/230V/1-phase	0.29/0.29/15	1, 2, 3, 4
CU-3	Classroom 205	AC-2-18	PLFY-P12NFMU-ER1.TH	Ceiling-Cassette (Four-Way)	12,000	13,500	80.0/67.0	70	FULL DEMAND	11,724.6	7,960.8	FULL DEMAND	9,641.4	1/4 / 1/2	HIGH	335		208/230V/1-phase	0.29/0.29/15	1, 2, 3, 4
CU-3	Hall 1 211	AC-2-19	PLFY-P08NFMU-ER1.TH	Ceiling-Cassette (Four-Way)	8,000	9,000	80.0/67.0	70	FULL DEMAND	7,816.4	6,146.0	FULL DEMAND	6,427.6	1/4 / 1/2	HIGH	315		208/230V/1-phase	0.28/0.28/15	1, 2, 3, 4
CU-3	Hall 2 212	AC-2-20	PLFY-P08NFMU-ER1.TH	Ceiling-Cassette (Four-Way)	8,000	9,000	80.0/67.0	70	FULL DEMAND	7,816.4	6,146.0	FULL DEMAND	6,427.6	1/4 / 1/2	HIGH	315		208/230V/1-phase	0.28/0.28/15	1, 2, 3, 4

Notes & Options:
1 Nominal cooling capacities are based on indoor coil EAT of 80/67°F (DB/WB), outdoor of 95°F (DB)
2 Nominal heating capacities are based on indoor coil EAT of 70°F (DB), outdoor of 43°F (WB)
3 See outdoor unit schedule for outdoor ambient conditions, connected capacity, and other factors associated with corrected capacities
4 See schematic piping/control diagram for indication of required indoor unit remote controllers, system controllers, and integration devices.
5 Full demand corrected capacity includes de-rate associated with indoor vs. outdoor connected capacity indicated on outdoor unit schedule for associated system.
Partial corrected capacity assumes sufficient diversity exists such that the connected capacity de-rate does not apply.
It is the designer's responsibility to ensure "Diamond System Builder" is set in the appropriate output capacity setting (full demand/partial demand) prior to generating this schedule.
6 It is recommended to always base heating corrected capacity on full demand.

KING architects INC.
Barry D. King, AIA,
Architect
1312 Sampson St.
Westlake, LA 70669
337.494.0806
www.kingarchitects.net

© COPYRIGHT 2022
ALL INFORMATION, EITHER DRAWN, WRITTEN, OR IMPLIED APPEARING IN THIS DOCUMENT SHALL NOT BE DUPLICATED, DISCLOSED, OR OTHERWISE USED WITHOUT THE WRITTEN PERMISSION OF BARRY D. KING AIA. THIS DOCUMENT IS AN INSTRUMENT OF SERVICE AND IS THE SOLE PROPERTY OF THE AUTHOR. FURTHERMORE, THE USE OF THIS DOCUMENT FOR ANY PURPOSE SHALL BE REVOKED, IF THE INTENT OF THE DESIGN OR THE CONSTRUCTION TECHNIQUES OR DETAILS SHOWN HEREIN ARE NOT ADHERED TO OR THE CONTRACTUAL AGREEMENT GOVERNING THEIR USE ARE NOT STRICTLY ADHERED TO.

JOB NO: 2316
DATE: JULY 2025
DRWN. BY: ET
CHKD. BY: RCC

REVISIONS

STATE OF LOUISIANA
R. CRAIG CAMPBELL, II
License No. 20350
8/1/25
PROFESSIONAL ENGINEER

GREATER ST MARY MISSIONARY BAPTIST
1401 MOELING STREET
LAKE CHARLES, LA 70601
MINISTRY CENTER

ADG ENGINEERING
ASSOCIATED DESIGN GROUP, INC.
3909 W Congress Street, Suite 201
Lafayette, Louisiana 70506
Phone: (337) 234-5710
Email: adginc@adginc.org
Project No. 24232

HVAC SCHEDULES

ALTERNATE #1

MC-M-301

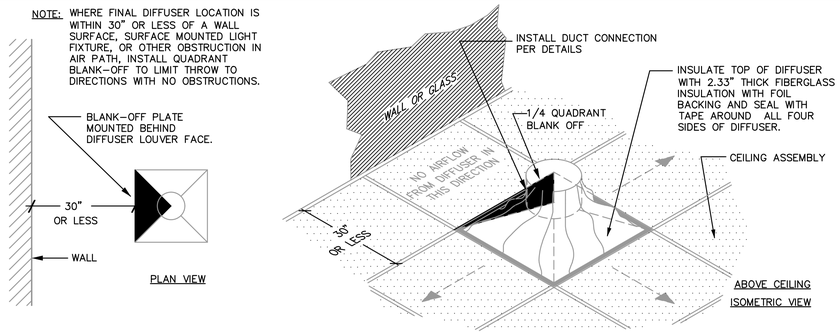

1 DIFFUSER THROW CONTROL DETAIL
NO SCALE
(TYPICAL ALL OBSTRUCTION AREAS)

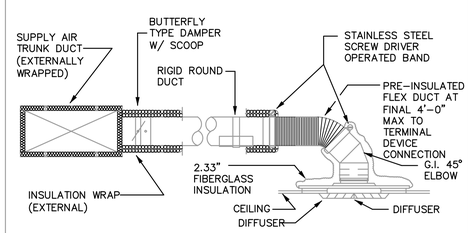

2 DIFFUSER / DUCT INSTALLATION DETAIL
NO SCALE

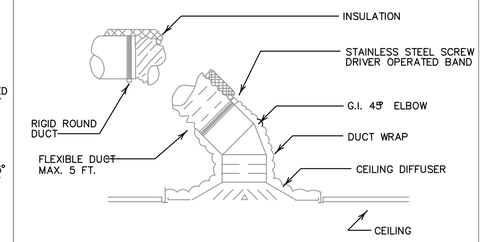

3 SUPPLY AIR OUTLET DETAIL
NO SCALE

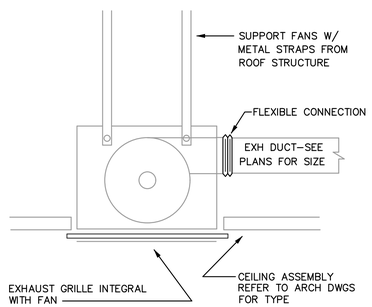

4 CEILING MOUNTED EXHAUST FAN DETAIL
NO SCALE

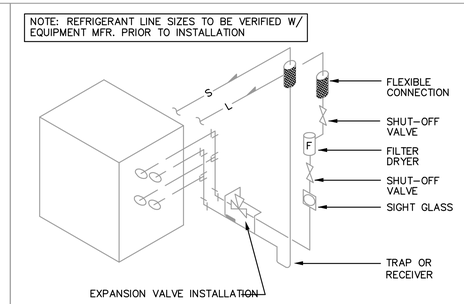

5 TYPICAL REFRIGERANT SCHEME
NO SCALE

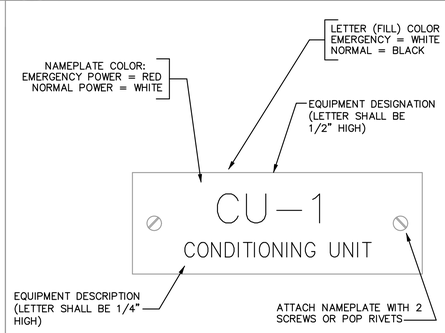

6 PLASTIC LAMINATE NAME PLATE DETAIL
NO SCALE

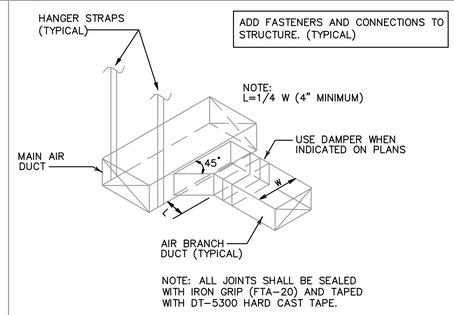

7 AIR DUCT CONNECTION DETAIL
NO SCALE

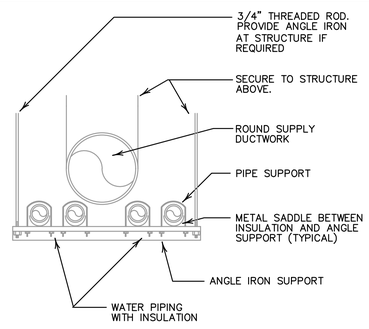

8 PIPE & DUCTWORK SUPPORT DETAIL
NO SCALE

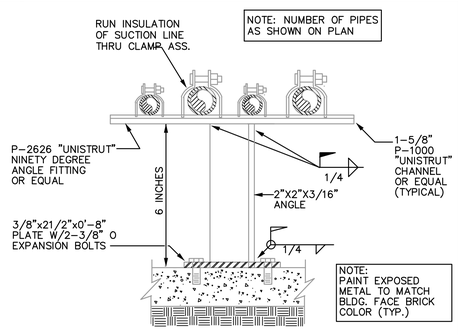

9 REFRIGERANT PIPE SUPPORT DETAIL
NO SCALE

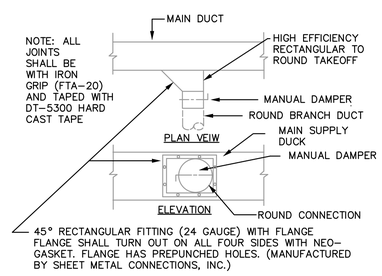

10 SUPPLY OR RETURN AIR DUCT CONNECTION DETAIL
NO SCALE

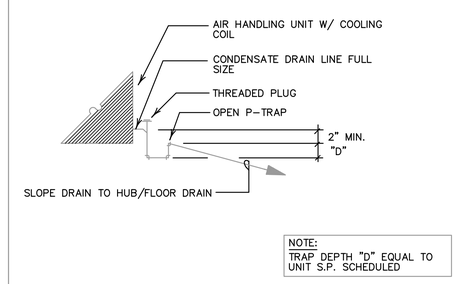

11 AIR HANDLING UNIT DRAIN PIPING DIAGRAM
NO SCALE

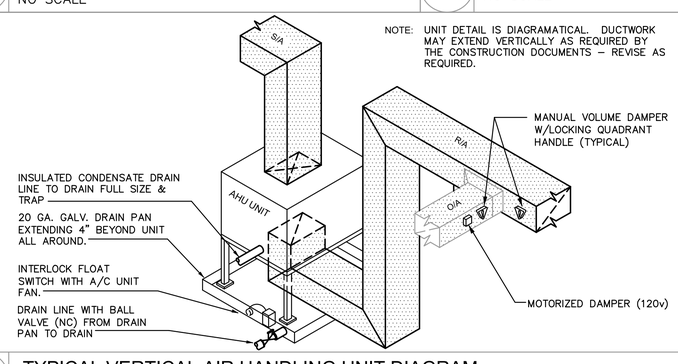

12 TYPICAL VERTICAL AIR HANDLING UNIT DIAGRAM
NO SCALE

KING architects INC.
Barry D. King, AIA,
Architect
1312 Sampson St.
Westlake, LA 70669
337.494.0806
www.kingarchitects.net

© COPYRIGHT 2022
ALL INFORMATION, EITHER DRAWN, WRITTEN, OR IMPLIED APPEARING IN THIS DOCUMENT SHALL NOT BE DUPLICATED, DISCLOSED, OR OTHERWISE USED WITHOUT THE WRITTEN PERMISSION OF BARRY D. KING AIA THIS DOCUMENT IS AN INSTRUMENT OF SERVICE AND IS THE SOLE PROPERTY OF THE AUTHOR. FURTHERMORE, THE USE OF THIS DOCUMENT FOR ANY PURPOSE SHALL BE REVOKED, IF THE INTENT OF THE DESIGN OR THE CONSTRUCTION TECHNIQUES OR DETAILS SHOWN HEREIN ARE NOT ADHERED TO OR THE CONTRACTUAL AGREEMENT GOVERNING THEIR USE ARE NOT STRICTLY ADHERED TO.

JOB NO: 2316
DATE: JULY 2025
DRWN. BY: ET
CHKD. BY: RCC

REVISIONS

STATE OF LOUISIANA
R. CRAIG CAMPBELL, II
License No. 29350
8/1/25
PROFESSIONAL ENGINEER

GREATER ST MARY MISSIONARY BAPTIST
1401 MOELING STREET
LAKE CHARLES, LA 70601
MINISTRY CENTER

ADG ENGINEERING
ASSOCIATED DESIGN GROUP, INC.
3909 W Congress Street, Suite 201
Lafayette, Louisiana 70506
Phone: (337) 234-5710
Email: adginc@adginc.org
Project No. 24232

HVAC DETAILS

ALTERNATE #1

MC-M-400

EXHAUST FAN KEF-1 INFORMATION

FAN UNIT NO	TAG	QTY	FAN UNIT MODEL #	MANUFACTURER	CFM	ESP	RPM	MOTOR ENCL	HP	BHP	PHASE	VOLT	FLA	DISCHARGE VELOCITY	WEIGHT (LBS)	SONES
1	KEF-1	1	EADU85H	ECON-AIR	2200	1.000	1503	TEAO-ECM	1.000	0.6140	1	115	11.6	696 FPM	98	15.5

MUA FAN MUA-1 INFORMATION

FAN UNIT NO	TAG	QTY	FAN UNIT MODEL #	BLOWER	HOUSING	MIN CFM	DESIGN CFM	ESP	RPM	MOTOR ENCL	HP	BHP	PHASE	VOLT	FLA	MCA	MOCP	WEIGHT (LBS)	SONES
2	MUA-1	1	EA-A1-G10	G10D	A1	–	1760	0.500	882	TEAO-ECM	1.000	0.5230	1	115	11.6	14.5A	25A	203	18.2

HOOD INFORMATION

HOOD NO	TAG	MODEL	MANUFACTURER	LENGTH	MAX COOKING TEMP	TYPE	APPLIANCE DUTY	DESIGN CFM/FT	TOTAL EXH CFM	EXHAUST PLENUM							TOTAL SUPPLY CFM	HOOD CONSTRUCTION	HOOD CONFIG	
													RISER(S)							
										WIDTH	LENG	HEIGHT	DIA	CFM	VEL	SP			END TO END	ROW
1		5424 EX-2-PSP-F	ECON-AIR	11' 0"	600 DEG	I	HEAVY	200	2200			4"	16"	2200	1576	-0.689"	1760	430 SS WHERE EXPOSED	ALONE	ALONE

HOOD INFORMATION

HOOD NO	TAG	FILTER(S)					LIGHT(S)			UTILITY CABINET(S)						FIRE SYSTEM PIPING	HOOD HANGING WEIGHT
												FIRE SYSTEM		ELECTRICAL	SWITCHES		
		TYPE	QTY	HEIGHT	LENGTH	EFFICIENCY @ 7 MICRONS	QTY	TYPE	WIRE GUARD	LOCATION	SIZE	TYPE	SIZE	MODEL #	QUANTITY		
1		CAPTRATE SOLO FILTER	8	20"	16"	85% SEE FILTER SPEC	3	RECESSED ROUND	NO	RIGHT	12"x54"x24"	TANK FS	4.0/4.0	SC-111110MA	1 LIGHT 1 FAN	YES	1001 LBS

HOOD OPTIONS

HOOD NO	TAG	OPTION
1		FIELD WRAPPER 4.00" HIGH FRONT, LEFT, RIGHT.
		BACKSPLASH 80.00" HIGH X 144.00" LONG 430 SS VERTICAL.
		STRUCTURAL FRONT PANEL.
		RIGHT VERTICAL END PANEL 27" TOP WIDTH, 21" BOTTOM WIDTH, 80" HIGH INSULATED 430 SS.
		LEFT VERTICAL END PANEL 27" TOP WIDTH, 21" BOTTOM WIDTH, 80" HIGH INSULATED 430 SS.

PERFORATED SUPPLY PLENUM(S)

HOOD NO	TAG	POS	LENGTH	WIDTH	HEIGHT	TYPE	RISER(S)				
							WIDTH	LENG	DIA	CFM	SP
1		Front	144"	14"	6"	MUA	10"	28"		586	0.159"
						MUA	10"	28"		586	0.159"
						MUA	10"	28"		586	0.159"

GREASE DUCT & CHIMNEY SPECIFICATIONS:
PROVIDE GREASE DUCT EQUAL TO ECON-AIR MODEL "EDW"
ROUND 20 GAUGE 430 STAINLESS STEEL DUCTWORK. MODEL "EDW"
IS LISTED TO UL-1978 AND IS INSTALLED USING "V" CLAMP LOCKING
CONNECTIONS SEALED WITH 3M FIRE BARRIER 2000 PLUS. MODEL "EDW"
DOES NOT REQUIRE WELDING PROVIDING IT HAS BEEN INSTALLED PER
THE MANUFACTURES INSTALLATION GUIDE.
PROVIDE RATED ACCESS DOORS AT EVERY CHANGE IN DIRECTION AND EVERY 12' ON CENTER. PER MANUFACTURES LISTING MODEL "EDW" HORIZONTAL RUNS LESS THAN 75 FT. CAN BE SLOPED 1/16" PER 12", HORIZONTAL RUNS MORE THAN 75 FT. CAN BE SLOPED 3/16" PER 12".
DUCT SHOULD BE SLOPED AS MUCH AS POSSIBLE TO REDUCE THE CHANCE OF GREASE ACCUMULATION IN HORIZONTAL RUNS.

IF THE DUCT OR CHIMNEY IS WITHIN 18 INCHES OF COMBUSTIBLE MATERIAL, PROVIDE UL-2221 OR UL-103 HT LISTED DOUBLE WALL GREASE DUCT OR DOUBLE WALL CHIMNEY EQUAL TO ECON-AIR MODEL "EDW- 2R, 2R TYPE HT, 3R, OR 3Z" ROUND 20 GAUGE 430 STAINLESS INNER DUCT INSULATED WITH A 24 GAUGE 430 STAINLESS OUTER SHELL.

FAN ACCESSORIES

FAN UNIT NO	TAG	EXHAUST			SUPPLY			
		GREASE CUP	GRAVITY DAMPER	WALL MOUNT	SIDE DISCHARGE	GRAVITY DAMPER	MOTORIZED DAMPER	WALL MOUNT
1		YES						

FAN OPTIONS

FAN UNIT NO	TAG	QTY	DESCRIPTION
1		1	GREASE BOX
		1	HINGE KIT – SHIPS LOOSE FOR CURB SUPPLIED BY OTHERS
		1	ECM WIRING PACKAGE – MANUAL OR 0-10VDC REFERENCE SPEED CONTROL –RTC– (TELCO MOTOR), CCW ROTATION
		1	2 YEAR PARTS WARRANTY
2		1	SIZE 1 UNTEMPERED COMMERCIAL DOWN DISCHARGE FOR BELT DRIVE AND G10D AHUS
		1	ECM WIRING PACKAGE-SUPPLY – MANUAL OR 0-10VDC REFERENCE SPEED CONTROL (TELCO MOTOR), CW ROTATION
		1	2 YEAR PARTS WARRANTY

FIRE SYSTEM PARTS LIST KEY

FIRE SYSTEM NO	TAG	KEY NUMBER – PART DESCRIPTION	QTY BY FACTORY	QTY BY DIST
1		0 – 0 – TANK FIRE SUPPRESSION POST-DISCHARGE PROCEDURE UTILITY CABINET LABEL SHEET.	1	0
		0 – 0 – TANK FIRE SUPPRESSION MAINTENANCE GUIDE UTILITY CABINET LABEL SHEET.	1	0
		0 – 0 – 12-F28021-32144-OT-360 DUCT FIRE THERMOSTAT WITH 12 FOOT WIRE LEADS. NO, CLOSE ON TEMP RISE AT 360°F. (A0034310).	1	0
		0 – 0 – 4429K153 1/2" MALE NPT TO 1/2" FEMALE NPT ELBOW, BRASS.	2	0
		0 – 0 – 4429K422 1/2" X 1/4" BRASS REDUCING BUSHING.	1	0
		0 – 0 – 79525 1/2" 90 PRO-PRESS ELBOW WITH 1/2"NPT FEMALE CONNECTION, VIEGA.	1	0
		0 – 0 – 79580 1/2" X 1/2" PRO-PRESS TEE X 1/2"NPT FEMALE CONNECTION, VIEGA.	2	0
		0 – 0 – 87-120042-001 SECONDARY ACTUATOR VALVE (SVA) – SINGLE ACTUATOR, REQUIRES PRIMARY RELEASE ACTUATOR, TANK FIRE SUPPRESSION.	1	0
		0 – 0 – 87-120045-001 HOSE, SECONDARY ACTUATOR HOSE, 7.5" BRAIDED STAINLESS STEEL, TANK FIRE SUPPRESSION.	1	0
		0 – 0 – 87-300001-001 TANK – PRESSURIZED TANK USED FOR TANK FIRE SUPPRESSION.	2	0
		0 – 0 – 87-300030-001 PRIMARY ACTUATOR KIT (PAK) – ACTUATOR AND RELEASE SOLENOID ASSEMBLY, ONE NEEDED PER FIRE SYSTEM, SUPERVISED, TANK FIRE SUPPRESSION.	1	0
		0 – 0 – 87-300033-001 DIN CONNECTOR, CANFIELD PART #5J560-201-EU0A, TANK FIRE SUPPRESSION, SUBMINATURE SOLENOID CONNECTION (CED VENDOR 30377).	1	0
		0 – 0 – 87-300152-001 HARDWARE, SVA BOLTS, TANK FIRE SUPPRESSION.	8	0
		0 – 0 – 98694A115 HARDWARE, DATANKLOCK LOCKING BRACKET SQUARE NUTS 5/16" ZINC, TANK FIRE SUPPRESSION.	4	0
		0 – 0 – A0034332 JUNCTION BOX FOR MANUAL PULL STATION. 1.5" DEEP BACK BOX, RED COLOR.	1	0
		0 – 0 – A31484 1/4" NPT SCHRADER VALVE AND CAP, JB INDUSTRIES. 1/4" FLARE X 1/4" MPT HALF UNION. USED ON TANK SERVICE PORT.	1	0
		0 – 0 – DATANKLOCK DISCHARGE ADAPTER TANK LOCKING PLATE FOR FIRE SYSTEM TANK INSTALLATION IN UTILITY CABINETS, TANK FIRE SUPPRESSION.	2	0
		0 – 0 – TANK STRAP TANK STRAP – USED FOR TANK FIRE SUPPRESSION.	6	0
		0 – 0 – TFS-UCTANKBRACKET TANK BRACKET FOR FIRE SYSTEM TANK INSTALLATION IN UTILITY CABINETS, TANK FIRE SUPPRESSION.	2	0
		0 – 0 – WK-283952-000 DISCHARGE ADAPTER, TANK FIRE SUPPRESSION.	2	0
		34 – 34 – A0034331 24VDC SINGLE ACTION MANUAL ACTUATION DEVICE (PUSH/PULL STATION) WITH PROTECTIVE COVER, ONE (1) NORMALLY OPEN CONTACT. RED COLOR.	1	0
		ADDITIONAL PARTS TO BE DETERMINED...		

FIRE SYSTEM INFORMATION

FIRE SYSTEM NO	TAG	TYPE	SIZE	MAX FP	DESIGN FP	INSTALLATION	
						SYSTEM	LOCATION ON HOOD
1		TANK FS	4.0/4.0	40	37	FIRE CABINET RIGHT	RIGHT, HOOD 1

GAS VALVE(S)

FIRE SYSTEM NO	TAG	TYPE	SIZE	SUPPLIED BY
1		SC ELECTRICAL	2.000	ECON-AIR

KING architects INC.
Barry D. King, AIA,
Architect
1312 Sampson St.
Westlake, LA 70669
337.494.0806
www.kingarchitects.net

© COPYRIGHT 2022
ALL INFORMATION, EITHER DRAWN, WRITTEN, OR IMPLIED APPEARING IN THIS DOCUMENT SHALL NOT BE DUPLICATED, DISCLOSED, OR OTHERWISE USED WITHOUT THE WRITTEN PERMISSION OF BARRY D. KING AIA THIS DOCUMENT IS AN INSTRUMENT OF SERVICE AND IS THE SOLE PROPERTY OF THE AUTHOR. FURTHERMORE, THE USE OF THIS DOCUMENT FOR ANY PURPOSE SHALL BE REVOKED, IF THE INTENT OF THE DESIGN OR THE CONSTRUCTION TECHNIQUES OR DETAILS SHOWN HEREIN ARE NOT ADHERED TO OR THE CONTRACTUAL AGREEMENT GOVERNING THEIR USE ARE NOT STRICTLY ADHERED TO.

JOB NO: 2316
DATE: JULY 2025
DRWN. BY: ET
CHKD. BY: RCC

REVISIONS

STATE OF LOUISIANA
R. CRAIG CAMPBELL, II
License No. 29380
8/1/25
PROFESSIONAL ENGINEER

GREATER ST MARY MISSIONARY BAPTIST
1401 MOELING STREET
LAKE CHARLES, LA 70601
MINISTRY CENTER

ADG ENGINEERING
ASSOCIATED DESIGN GROUP, INC.
3909 W Congress Street, Suite 201
Lafayette, Louisiana 70506
Phone: (337) 234-5710
Email: adginc@adginc.org
Project No. 24232

KITCHEN HOOD

ALTERNATE #1

MC-M-500

FAN OPTIONS

FAN UNIT NO	TAG	QTY	DESCRIPTION
1		1	GREASE BOX
		1	HINGE KIT – SHIPS LOOSE FOR CURB SUPPLIED BY OTHERS
		1	ECM WIRING PACKAGE – MANUAL OR 0–10VDC REFERENCE SPEED CONTROL –RTC– (TELCO MOTOR), CCW ROTATION
		1	2 YEAR PARTS WARRANTY
2		1	SIZE 1 UNTEMPERED COMMERCIAL DOWN DISCHARGE FOR BELT DRIVE AND G10D AHUS
		1	ECM WIRING PACKAGE–SUPPLY – MANUAL OR 0–10VDC REFERENCE SPEED CONTROL (TELCO MOTOR), CW ROTATION
		1	2 YEAR PARTS WARRANTY

EXHAUST FAN

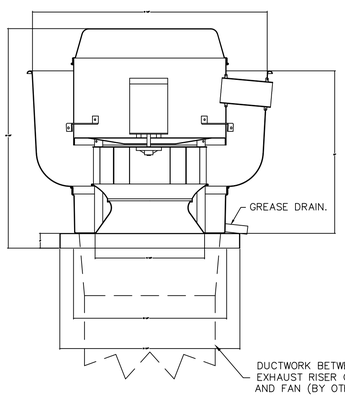

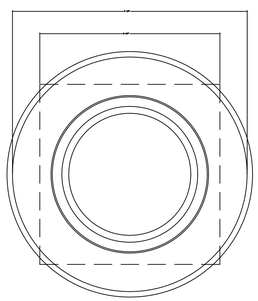

TOP VIEW

FEATURES:

- DIRECT DRIVE CONSTRUCTION (NO BELTS/PULLEYS).
- ROOF MOUNTED FANS.
- RESTAURANT MODEL.
- UL705 AND UL762 AND ULC–S645
- VARIABLE SPEED CONTROL.
- INTERNAL WIRING.
- THERMAL OVERLOAD PROTECTION (SINGLE PHASE).
- HIGH HEAT OPERATION 300°F (149°C).
- GREASE CLASSIFICATION TESTING.
- NEMA 3R SAFETY DISCONNECT SWITCH.

NORMAL TEMPERATURE TEST
EXHAUST FAN MUST OPERATE CONTINUOUSLY WHILE EXHAUSTING AIR AT 300°F (149°C) UNTIL ALL FAN PARTS HAVE REACHED THERMAL EQUILIBRIUM, AND WITHOUT ANY DETERIORATING EFFECTS TO THE FAN WHICH WOULD CAUSE UNSAFE OPERATION.

ABNORMAL FLARE–UP TEST
EXHAUST FAN MUST OPERATE CONTINUOUSLY WHILE EXHAUSTING BURNING GREASE VAPORS AT 600°F (316°C) FOR A PERIOD OF 15 MINUTES WITHOUT THE FAN BECOMING DAMAGED TO ANY EXTENT THAT COULD CAUSE AN UNSAFE CONDITION.

OPTIONS

- GREASE BOX.
- HINGE KIT – SHIPS LOOSE FOR CURB SUPPLIED BY OTHERS.
- ECM WIRING PACKAGE – MANUAL OR 0–10VDC REFERENCE SPEED CONTROL –RTC– (TELCO MOTOR), CCW ROTATION.
- 2 YEAR PARTS WARRANTY.

CLEARANCE TO COMBUSTIBLES

HOODS #	SURFACE	*CLEARANCE
1	TOP	18"
	FRONT	0"
	BACK	18"
	LEFT	18"
	RIGHT	0"

- *0" CLEARANCE TO COMBUSTIBLES CONFORMS TO UL710 STANDARD.
- HOOD MOUNTED UTILITY CABINETS REQUIRE 36" SERVICE CLEARANCE.

SPECIFICATION: CAPTRATE GREASE–STOP SOLO FILTER

THE CAPTRATE GREASE–STOP SOLO FILTER IS A SINGLE–STAGE FILTER FEATURING A UNIQUE S–BAFFLE DESIGN IN CONJUNCTION WITH A SLOTTED REAR BAFFLE DESIGN, TO DELIVER EXCEPTIONAL FILTRATION EFFICIENCY.

FILTER IS STAINLESS STEEL CONSTRUCTION, AND SIZED TO FIT INTO STANDARD 2–INCH DEEP HOOD CHANNEL(S).

UNITS SHALL INCLUDE STAINLESS STEEL HANDLES AND A FASTENING DEVICE TO SECURE THE TWO COMPONENTS WHEN ASSEMBLED.

GREASE EXTRACTION EFFICIENCY PERFORMANCE SHALL REMOVE AT LEAST 75% OF GREASE PARTICLES FIVE MICRONS IN SIZE, AND 85% GREASE PARTICLES SEVEN MICRONS IN SIZE AND LARGER, WITH A CORRESPONDING PRESSURE DROP NOT TO EXCEED 1.0 INCHES OF WATER GAUGE.

THE CAPTRATE GREASE–STOP SOLO WAS TESTED TO ASTM STANDARD ASTM F2519–05. MANUFACTURER APPROVED FOR USE IN SOLID FUEL APPLICATIONS AS A SPARK ARRESTER.

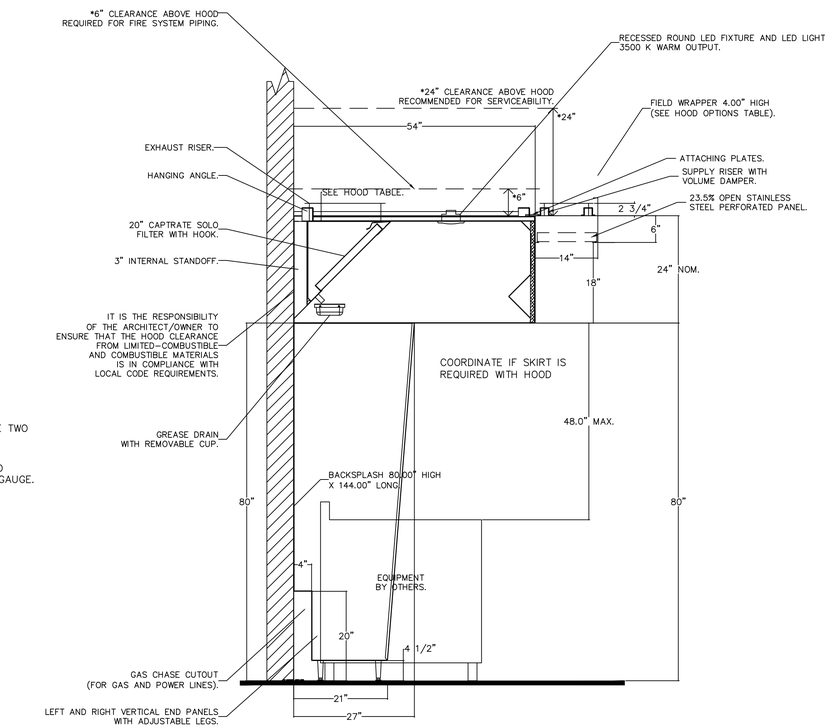

SECTION VIEW – MODEL 5424EX–2–PSP–F
HOOD – #1

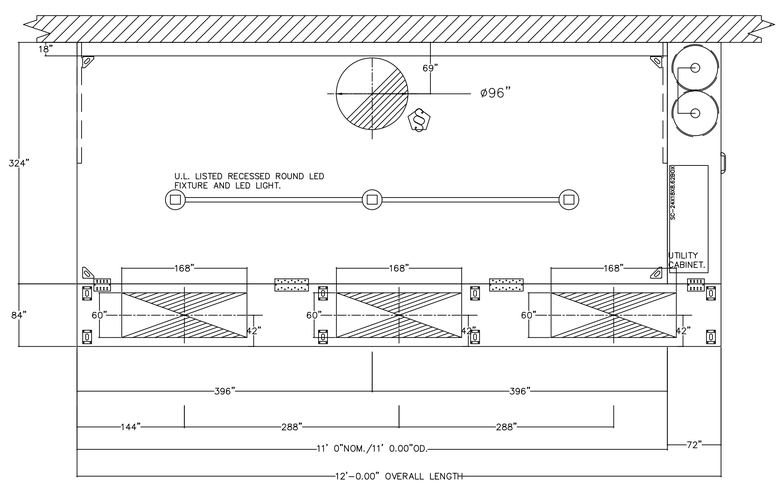

PLAN VIEW – HOOD #1
11' 0.00" LONG 5424EX–2–PSP–F

KING architects INC.
Barry D. King, AIA,
Architect
1312 Sampson St.
Westlake, LA 70669
337.494.0806
www.kingarchitects.net

© COPYRIGHT 2022
ALL INFORMATION, EITHER DRAWN, WRITTEN, OR IMPLIED APPEARING IN THIS DOCUMENT SHALL NOT BE DUPLICATED, DISCLOSED, OR OTHERWISE USED WITHOUT THE WRITTEN PERMISSION OF BARRY D. KING AIA. THIS DOCUMENT IS AN INSTRUMENT OF SERVICE AND IS THE SOLE PROPERTY OF THE AUTHOR. FURTHERMORE, THE USE OF THIS DOCUMENT FOR ANY PURPOSE SHALL BE REVOKED, IF THE INTENT OF THE DESIGN OR THE CONSTRUCTION TECHNIQUES OR DETAILS SHOWN HEREIN ARE NOT ADHERED TO OR THE CONTRACTUAL AGREEMENT GOVERNING THEIR USE ARE NOT STRICTLY ADHERED TO.

JOB NO: 2316
DATE: JULY 2025
DRWN. BY: ET
CHKD. BY: RCC

REVISIONS

STATE OF LOUISIANA
R. CRAIG CAMPBELL, II
License No. 28350
8/1/25
PROFESSIONAL ENGINEER

GREATER ST MARY MISSIONARY BAPTIST
1401 MOELING STREET
LAKE CHARLES, LA 70601
MINISTRY CENTER

KITCHEN HOOD

ALTERNATE #1

ADG ENGINEERING
ASSOCIATED DESIGN GROUP, INC.
3909 W Congress Street, Suite 201
Lafayette, Louisiana 70506
Phone: (337) 234-5710
Email: adginc@adginc.org
Project No. 24232

MC-M-600

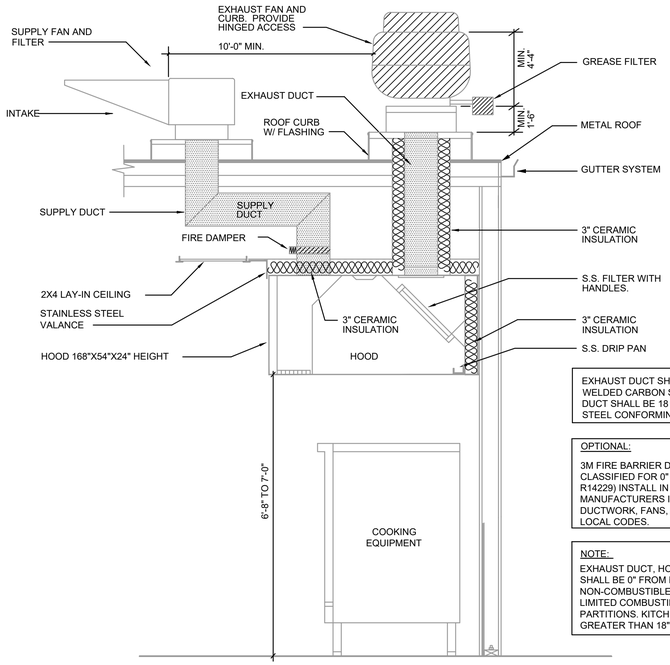

EXHAUST DUCT SHALL BE 16 GAUGE WELDED CARBON STEEL AND SUPPLY DUCT SHALL BE 18 GAUGE GALVANIZED STEEL CONFORMING TO NFPA 96.

OPTIONAL:

3M FIRE BARRIER DUCT WRAP 20A - ICBO #5907 UL CLASSIFIED FOR 0" CLEARANCE TO COMBUSTIBLES (UL R14229) INSTALL IN ACCORDANCE WITH MANUFACTURERS INSTRUCTIONS. INSTALL HOOD, DUCTWORK, FANS, ETC. AS PER NFPA 96 AND ALL LOCAL CODES.

NOTE:

EXHAUST DUCT, HOOD, AND GREASE REMOVAL DEVICES SHALL BE 0" FROM NON-COMBUSTIBLE METAL ROOF, NON-COMBUSTIBLE LAY IN CEILING AND MIN. 3" FROM LIMITED COMBUSTIBLE GYPSUM BOARD ON STEEL JOISTS. PARTITIONS. KITCHEN HOOD AND EXHAUST DUCT ARE GREATER THAN 18" FROM BUILDING

2 KITCHEN FAN ROOF PLAN

SCALE:1/16" = 1'-0" REFER TO ARCHITECTURAL PLANS FOR DIMENSIONS

NORTH

KITCHEN WALL HOOD SPECIFICATION

A. KITCHEN HOOD: FURNISH AND INSTALL COMPLETE PACKAGED COOKING VENTILATION SYSTEMS WITH EXHAUST AND MAKE-UP AIR; INCLUDING ALL WIRING, MASTER ELECTRIC CONTROL PANELS, FILTER SECTIONS, AND CONTROLS FOR SYSTEM PERFORMANCE PER DRAWINGS AND SPECIFICATIONS. MAXIMUM MOUNTING HEIGHT OF HOODS TO BE MIN. 6'-8" ABOVE FINISHED FLOOR. KITCHEN HOOD SHALL BE CAPTIVE AIRE NDBR OR APPROVED EQUAL.

B. A STAINLESS STEEL SKIRTING SHALL BE PROVIDED BETWEEN THE HOOD AND FINISHED CEILING OF THE KITCHEN AS REQUIRED.

C. HOODS SHALL BE UL APPROVED WITH FABRICATION OF SYSTEM COMPONENTS IN ACCORDANCE WITH NFPA NO. 96 REQUIREMENTS AND BEAR THE NSF SEAL, BOCA AND SOUTHERN BUILDING CODE SEAL OF APPROVAL.

D. EACH SYSTEM SHALL BE COMPLETE PACKAGED TYPE WITH ALL COMPONENTS ASSEMBLED BY A MANUFACTURER REGULARLY ENGAGED IN THE PRODUCTION OF THIS TYPE OF EQUIPMENT. ALL FEATURES CONSIDERED STANDARD BY THE MANUFACTURER AND WHICH ARE REQUIRED TO COMPLETE THE SYSTEM, AND TO MAKE IT FUNCTIONAL, SHALL BE INCLUDED WITHOUT RESPECT TO SPECIFIC DETAILING IN THESE SPECIFICATIONS.

E. THE HOODS SHALL BE SINGLE SHELL TYPE, 18 GAUGE STAINLESS STEEL INNER LINER WITH STAINLESS STEEL EXTERIOR. AIR SHALL BE SUPPLIED THROUGH THE VENTILATOR DOWNWARD TO THE VICINITY OF THE COOKING EQUIPMENT, UNDER CONTROLLED BALANCED CONDITIONS, PERMITTING A VELOCITY NO HIGHER THAN 50/80 FPM AT THE COOKING SURFACE. THE INNER CANOPY SHALL BE REINFORCED AND STIFFENED AND ALL JOINTS AND SEAMS WELDED. DOWNWARD AIR VELOCITY WILL NOT EXCEED APPROXIMATELY 300-450 FEET PER MINUTE (PLUS OR MINUS % ACROSS THE ENTIRE SUPPLY AIR SLOT), DEPENDING ON COOKING EQUIPMENT TO BE VENTILATED.

F. A CONTROL PANEL, 24 VOLT – PREWIRED, FLUSH MOUNTED, SHALL CONTAIN SEPARATE SWITCHES WITH SIGNAL LIGHTS FOR EXHAUST AND MAKE-UP AIR FANS AND CONTROL DAMPERS WITH A CONTROL VOLTAGE SWITCH FOR INTERNAL LIGHTING. ALL VENTILATOR LIGHTING WILL BE UL APPROVED VAPOR PROOF INCANDESCENT TYPE AND WIRED 110 VOLT TO A JUNCTION BOX AT THE TOP OF THE VENTILATOR WITH ONE REQUIRED FOR EVERY THREE (3) FEET OF HOOD.

G. LOW VOLTAGE WIRING, IN CONDUIT, CONFORMING TO NEC NO. 70, SHALL BE PROVIDED IN THE FORM OF A WIRING HARNESS. THIS IS THE ONLY INTERNAL WIRING THAT MUST BE COMPLETED BY THE ELECTRICAL SUB-CONTRACTOR.

H. GREASE FILTERS SHALL BE STANDARD-KEIL, 20"X20"X2", "FIRE FIGHTER" TYPE FN AND SHALL BE PROVIDED ALONG WITH APPROPRIATE FILTER BLANKS TO PROVIDE FILTER 98% GREASE REMOVAL EFFICIENCY, AFI RATED. FILTERS TO BE OF STAINLESS STEEL CONSTRUCTION AND BE FIRE RETARDANT PER NFPA NO. 96. DESIGN CFM THROUGH DUCTWORK AND FILTERS SHALL MEET ALL APPLICABLE CODES FOR SYSTEM PERFORMANCE AND GREASE REMOVAL EFFICIENCY. FILTER SHALL BE PROVIDED WITH HANDLES FOR EASY REMOVAL.

I. GREASE TROUGHS SHALL BE INTEGRAL WITH HOODS AND DESIGNED FOR EASY REMOVAL.

J. EACH HOOD ASSEMBLY SHALL INCLUDE ALL COMPONENTS AND SHALL BE FULLY FACTORY BUILT AND ASSEMBLED BY THE MANUFACTURER AND WIRED IN ACCORDANCE WITH NEC NO. 70. EACH SYSTEM SHALL INCLUDE:

1. HIGH LIMIT FIRESTAT AND FIRE DAMPER IN SUPPLY DUCT.
2. A FACTORY WIRED MASTER CONTROL PANEL MOUNTED IN A WEATHER- PROOF BOX SHALL CONTAIN IN ADDITION TO TERMINALS AND WIRING FOR THE ABOVE, MAGNETIC STARTERS WITH THREE LEG OVERLOAD, DISCONNECT SWITCHES FOR SUPPLY AND EXHAUST FANS, AND CONTROL TRANSFORMER. ALL ELECTRICAL WORK SHALL BE DONE BY HOOD MANUFACTURER, IN ACCORDANCE WITH SYSTEM DESIGN AND IN STRICT ADHERENCE TO NEC NO. 70 AND OTHER APPLICABLE CODES.
3. MASTER DISCONNECT SWITCH AND WIRING TO THE MASTER ELECTRICAL PANEL SHALL BE PART OF THE HOOD SYSTEM.
4. ALL EXHAUST DUCTWORK SHALL BE 16 GAUGE WELDED CARBON STEEL OR APPROVED EQUAL. ALL SUPPLY DUCTS SHALL BE 18 GAUGE GALVANIZED STEEL, CONFORMING TO NFPA NO. 96 AND BUILT TO LENGTHS REQUIRED. EXHAUST DUCT CONNECTING COLLARS SHALL BE THE HAT EXPANSION TYPE, CONFORMING TO NPFA NO. 96. WRAP EXHAUST DUCT WITH 3" ONE HOUR RATED CERAMIC INSULATION.
5. HOOD PACKAGES SHALL BE WALL TYPE HOODS AND SHALL BE SIZED AS SHOWN ON THE PLANS. MECHANICAL CONTRACTOR SHALL VERIFY VOLTAGES AND PHASES PRIOR TO ORDERING EQUIPMENT. MANUFACTURER SHALL SUBMIT ADJUSTED AIR QUANTITIES TO ARCHITECT FOR APPROVAL 10 DAYS PRIOR TO BID IF REQUIRED FOR REFERENCED HOOD TO PERFORM AS SPECIFIED FOR TYPE OF EQUIPMENT LOCATED BELOW HOOD. ITEMS BEING INSTALLED BELOW HOOD ARE CALLED OUT UNDER ANOTHER SECTION OF THE GENERAL CONTRACT. CONTRACTOR SHALL VERIFY VOLTAGES PRIOR TO ORDERING EQUIPMENT.
6. HOOD MANUFACTURER SHALL BE COMPLETELY RESPONSIBLE FOR START-UP AND TESTING OF ENTIRE HOOD SYSTEM AND ALL ADJUSTMENTS REQUIRED FOR HOOD TO PERFORM ACCORDING TO ENGINEER'S REQUIREMENTS, INCLUDING SMOKE TEST, INSTRUCTIONS TO OWNER ON OPERATION AND MAINTENANCE, ETC.

AUTOMATIC FIRE SUPPRESSION SYSTEM-KITCHEN HOOD

A. INSTALLATION SHALL BE IN ACCORDANCE WITH APPENDIX D (STANDARD FOR RESTAURANT HOOD FIRE PROTECTION SYSTEM) AND NFPA PAMPHLET NO. 96, U.L. STANDARD 300 (EFFECTIVE DATE 11/21/94), AS WELL AS APPLICABLE LOCAL, STATE AND INSURANCE COMPANY REQUIREMENTS.

B. ALL COOKING GREASE EXHAUST HOODS, DUCTS AND THE COMPLETE HOOD AREA SHALL BE PROTECTED AGAINST FIRE BY THE INSTALLATION OF AN AUTOMATIC LINK WET CHEMICAL FIRE EXTINGUISHING SYSTEM AS MANUFACTURED BY SAFETY FIRST PRODUCTS CORPORATION, KIDDE OR ANSUL. SUCH SYSTEM SHALL BE INSTALLED BY A QUALIFIED FIRE PROTECTION CONTRACTOR.

C. THE SYSTEM SHALL BE OF THE STORED PRESSURE TYPE OF SUFFICIENT CAPACITY, AS DETERMINED BY UNDERWRITERS'S LABORATORIES, INC. LISTING, TO PROVIDE A HIGH CONCENTRATION OF CHEMICAL IN THE PLENUM AREA(S), COOK SURFACES AND EXHAUST DUCT SYSTEM. THE CHEMICAL SHALL BE STORED IN A TESTED CYLINDER. NOZZLES LOCATED IN THE PLENUM(S) AND GREASE EXHAUST DUCT SHALL BE CAPABLE OF FUNCTIONING WITH A HEAVY ACCUMULATION OF GREASE. SYSTEM SHALL BE SELF-PURGING.

D. ALL SYSTEMS ARE TO INCLUDE REMOTE MANUAL PULL STATIONS.

E. AUTOMATIC MECHANICAL GAS FUEL AND ELECTRIC SHUT-OFF SHALL BE PROVIDED FOR ALL COOKING APPLIANCES THAT ARE PROTECTED BY THE CHEMICAL SYSTEM. FUEL SHUT-OFF SHALL OPERATE UPON THE ACTUATION OF THE FIRE PROTECTION SYSTEM. MECHANICAL GAS VALVES SHALL BE PROVIDED BY FIRE SUPPRESSION CONTRACTOR AND INSTALLED BY PLUMBING CONTRACTOR. COORDINATE WITH ELECTRICAL CONTRACTOR FOR SHUTDOWN OF ELECTRICAL DEVICES.

F. PROVIDE THREE (3) NORMALLY OPEN CONTACTS ON HOOD FOR ACTIVATION OF ELECTRICAL SHUT-OFF AND INTERLOCK INTO FIRE ALARM PANEL, AND SUPPLY FAN SHUT DOWN; COORDINATE WITH FIRE ALARM CONTRACTOR.

G. AUTOMATIC OPERATION OF SYSTEM SHALL BE BY MEANS OF 3600F FUSIBLE METAL LINKS OR 500OF QUARTZOID BULB LINKS, DEPENDING ON OPERATING TEMPERATURE OF THE VENTILATING SYSTEM.

H. RELEASING DEVICE SHALL BE THE ANSUL "AUTOMAN" BY THE ANSUL COMPANY. RELEASING DEVICE SHALL BE CAPABLE OF REVERSING THE AGENT MANUALLY BY MECHANICAL MEANS AT UNIT LOCATION OR REMOTE LOCATION WITHOUT USE OF ELECTRICAL POWER.

I. CHEMICAL TANK(S) SHALL BE STEEL CONSTRUCTED AND TESTED IN ACCORDANCE WITH DEPARTMENT OF TRANSPORTATION AND U.L. REQUIREMENTS, HYDROTESTED TO 600 PSI. LOCATE AS INDICATED ON PLANS OR AS DIRECTED BY OWNER.

J. WET AGENT SHALL BE POTASSIUM BASED FIRE SUPPRESSION AGENT. THE AGENT PH SHALL NOT EXCEED 9.5. THE AGENT SHALL NOT ADVERSELY AFFECT ALUMINUM OR STAINLESS STEEL DURING EXPOSURE PERIODS OF UP TO 24 HOURS.

K. DISCHARGE NOZZLES SHALL BE SELECTED FOR THE HAZARD THEY ARE DESIGNED TO PROTECT. PROVIDE BLOW-OFF CAPS TO KEEP FOREIGN MATTER FROM ENTERING NOZZLES FOR DEEP FAT FRYERS AND OTHER ASSOCIATED COOKING EQUIPMENT.

L. WET CHEMICAL NOZZLES SHALL BE EQUIPPED WITH STRAINERS TO PREVENT FOREIGN MATTER INSIDE THE DISTRIBUTION TUBING FROM CLOGGING THE NOZZLE ORIFICE.

M. WET CHEMICAL SYSTEM SHALL UTILIZE TYPE 304 STAINLESS STEEL, FITTINGS SHALL BE STAINLESS STEEL. AT CONTRACTORS OPTION BLACK IRON PIPING AND FITTINGS MAY BE USED.

HVAC GENERAL NOTES:

1. ALL WORK SHALL COMPLY WITH LOCAL, STATE & FEDERAL CODES TO SATISFACTION OF CODE AUTHORITIES HAVING JURISDICTION.
2. COORDINATE ALL CEILING DEVICES, DUCTWORK, PIPEWORK, ETC. WITH LIGHTING, STRUCTURE, ETC. THROUGH GENERAL CONTRACTOR. REFER TO ALL DRAWINGS, (PLUMBING, ELECTRICAL, ARCHITECTURAL, ETC.). NOTIFY ARCHITECT/ ENGINEER CONCERNING ANY CONFLICTS NOTED PRIOR TO BIDS, FOR CLARIFICATION TO SATISFACTION OF BIDDER. REFER TO SPECIFICATIONS SECTION 23 FOR REQUIREMENTS. REFER TO LATEST ARCHITECTURAL REFLECTED CEILING PLAN. COORDINATE DEVICE LOCATION WITH CEILING GRID.
3. CONTRACTOR SHALL SEAL ALL PIPING AND DUCT PENETRATIONS THROUGH WALLS AND FLOORS AS PER THE RATED UL DESIGNATION'S REQUIREMENTS. REFER TO ARCHITECTURAL PLANS FOR ALL UL RATINGS.
4. PROVIDE ACCESS PANELS PER SPECIFICATIONS TO ACCESS ALL DEVICES REQUIRING MAINTENANCE/ADJUSTMENT WHERE NECESSARY. COORDINATE WITH ARCHITECTURAL FINISH SCHEDULE.
5. CONTRACTOR SHALL CAP AND SEAL ALL DUCTWORK DURING CONSTRUCTION TO PREVENT CONTAMINATION DUE TO CONSTRUCTION DEBRIS.
6. ALL VALVES, DAMPERS, ACCESS PANELS, ETC SHALL BE INSTALLED FOR MAXIMUM ACCESSIBILITY.
7. ALL SUPPLY, RETURN, EXHAUST AND OUTSIDE AIR DUCTWORK THIS SHEET SHALL BE EXTERNALLY INSULATED UNLESS SHOWN OTHERWISE. DUCT SIZES SHOWN ARE CLEAR METAL TO METAL. WRAP DUCTWORK EXTERNALLY.
8. ALL WORK SHALL COMPLY WITH THE REQUIREMENTS OF NFPA 90A & 101, THE CLEAN AIR ACT AND THE AMERICANS WITH DISABILITIES ACT.
9. HARDCAST ALL DUCTWORK JOINTS FOR AIRTIGHT SYSTEM. REFER TO DETAILS FOR UCTWORK TAP, SPLITTER, BRANCH CONFIGURATION, ETC. INSTALL IN ACCORDANCE WITH SMACNA RECOMMENDATIONS AND INSTALLATION GUIDELINES.

HVAC KEYNOTES:

1. KITCHEN EXHAUST FAN LOCATED ON ROOF. REFER TO ARCHITECTURAL DRAWINGS FOR ROOF PENETRATION DETAIL. FAN TO BE INSTALLED PER MANUFACTURERS RECOMMENDATION.
2. KITCHEN MAKEUP AIR FAN LOCATED ON ROOF. REFER TO ARCHITECTURAL DRAWINGS FOR ROOF PENETRATION DETAIL. FAN TO BE INSTALLED PER MANUFACTURERS RECOMMENDATION.
3. MAINTAIN 10' BETWEEN EXHAUST FAN AND ANY OUTSIDE AIR OR MAKEUP AIR INTAKE.

ASSOCIATED DESIGN GROUP, INC.
3909 W Congress Street, Suite 201
Lafayette, Louisiana 70506
Phone: (337) 234-5710
Email: adginc@adginc.org

Project No. 24232

KING architects INC.
Barry D. King, AIA,
Architect
1312 Sampson St.
Westlake, LA 70669
337.494.0806
www.kingarchitects.net

© COPYRIGHT 2022
ALL INFORMATION, EITHER DRAWN, WRITTEN, OR IMPLIED APPEARING IN THIS DOCUMENT SHALL NOT BE DUPLICATED, DISCLOSED, OR OTHERWISE USED WITHOUT THE WRITTEN PERMISSION OF BARRY D. KING AIA THIS DOCUMENT IS AN INSTRUMENT OF SERVICE AND IS THE SOLE PROPERTY OF THE AUTHOR. FURTHERMORE, THE USE OF THIS DOCUMENT FOR ANY PURPOSE SHALL BE REVOKED, IF THE INTENT OF THE DESIGN OR THE CONSTRUCTION TECHNIQUES OR DETAILS SHOWN HEREIN ARE NOT ADHERED TO OR THE CONTRACTUAL AGREEMENT GOVERNING THEIR USE ARE NOT STRICTLY ADHERED TO.

JOB NO: 2316
DATE: JULY 2025
DRWN. BY: ET
CHKD. BY: RCC

REVISIONS

STATE OF LOUISIANA
R. CRAIG CAMPBELL, II
License No. 29350
8/1/25
PROFESSIONAL ENGINEER

GREATER ST MARY MISSIONARY BAPTIST
1401 MOELING STREET
LAKE CHARLES, LA 70601
MINISTRY CENTER

KITCHEN HOOD

ALTERNATE #1

MC-M-700

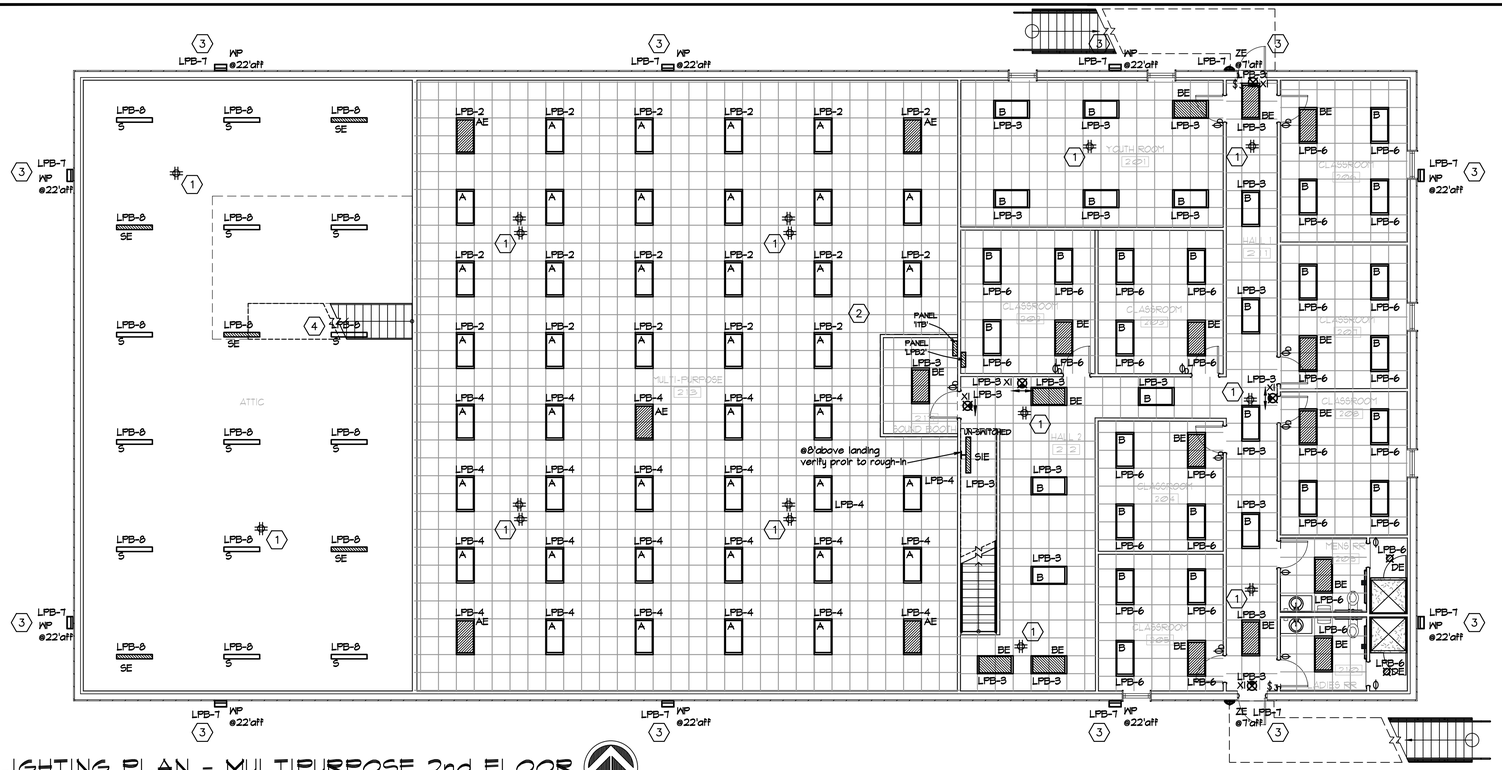

2 LIGHTING PLAN - MULTIPURPOSE 2nd FLOOR
SCALE: 1/8" = 1'-0"

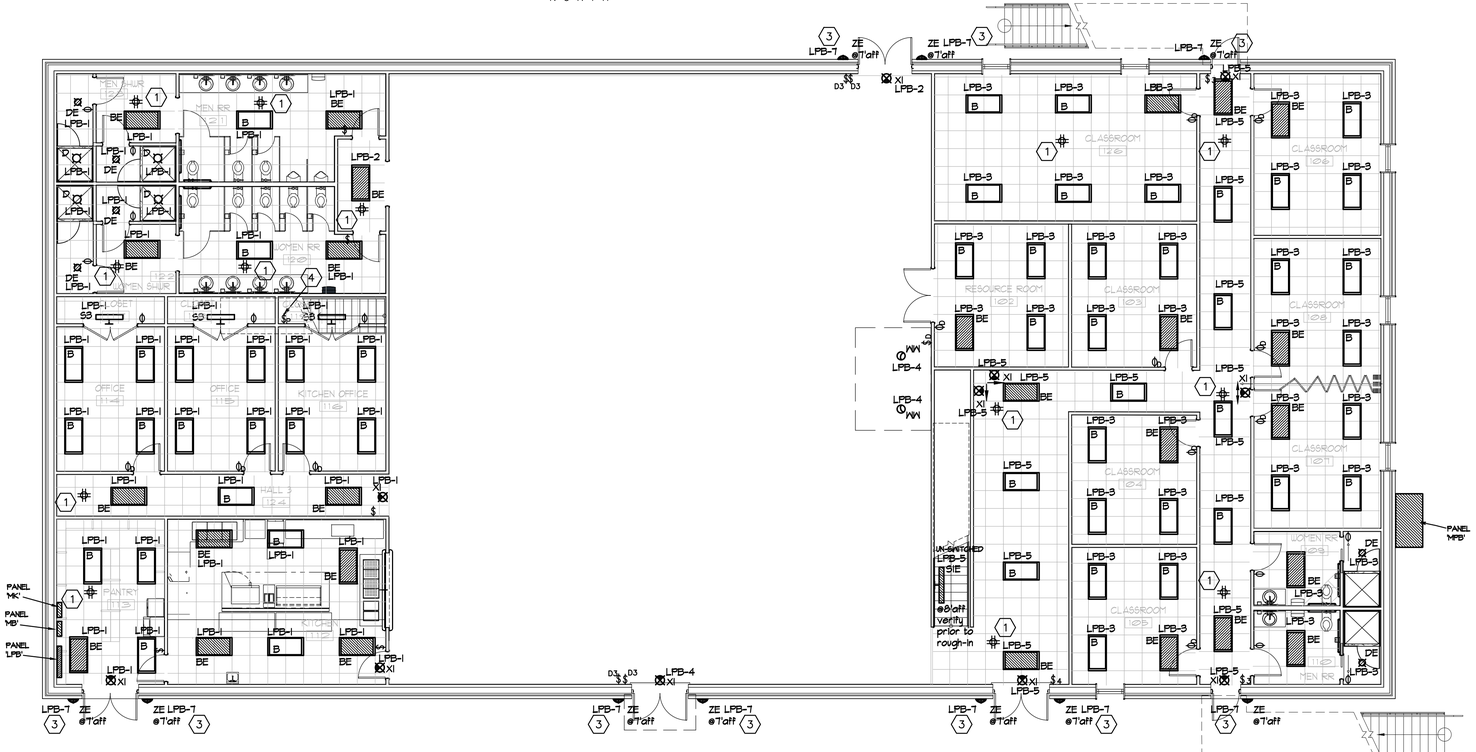

1 LIGHTING PLAN - MULTIPURPOSE 1st FLOOR
SCALE: 1/8" = 1'-0"

GENERAL NOTES:

A. CONTRACTOR SHALL REFER TO ALL OTHER PORTIONS OF THE CONTRACT DOCUMENTS (PLANS, SPECIFICATIONS, ADDENDA, ARCHITECTURAL SUPPLEMENTAL INSTRUCTIONS AND ANY APPROVED CHANGE ORDERS) AND PROVIDE ALL LIGHT FIXTURES, OUTLETS, TELE/DATA OUTLETS, SPEAKERS, AND ASSOCIATED CIRCUITRY AS IF ORIGINALLY INCLUDED ON THE ELECTRICAL PLANS. IF THERE ARE ANY DISCREPANCIES, CONTRACTOR SHALL NOTIFY ARCHITECT/ENGINEER IN WRITING PRIOR TO ORDERING EQUIPMENT, ROUGH-IN FOR EQUIPMENT AND/OR INSTALLATION OF EQUIPMENT. PRIOR TO ROUGH-IN OF EQUIPMENT, CONTRACTOR SHALL BE RESPONSIBLE FOR OBTAINING COPIES OF APPROVED SHOP DRAWINGS OF SUCH EQUIPMENT AND REVIEWING SAID SUBMITTALS TO ENSURE COMPATIBILITY WITH THE ELECTRICAL SYSTEM. CONTRACTOR SHALL IMMEDIATELY NOTIFY ARCHITECT/ENGINEER IN WRITING OF ANY DISCREPANCIES BETWEEN THE REQUIRED ROUGH-IN REQUIREMENTS AND THE ELECTRICAL SYSTEM.

B. EXTEND UN-SWITCHED CONDUCTOR TO ALL EXIT SIGNS, EMERGENCY LIGHTING UNITS AND EMERGENCY BATTERY PACK. REFER TO SPECIFICATIONS.

C. VERIFY EXACT MOUNTING HEIGHT OF ALL WALL MOUNTED FIXTURES W/ARCHITECT/OWNER PRIOR TO ROUGH-IN.

D. VERIFY MOUNTING HEIGHT OF ALL FIXTURES WITH ARCHITECT/OWNER PRIOR TO PURCHASING FIXTURES AND/OR ROUGH-IN.(TYPICAL)

E. REFER TO ARCHITECTURAL REFLECTED CEILING FOR ALL CEILING MOUNTED DEVICES.

F. SHOULD IT BE NECESSARY TO RUN ANY ELECTRICAL SERVICES, CONDUITS, ETC. THROUGH THE BUILDING'S FOOTINGS, CONTRACTOR SHALL REFER TO THE STRUCTURAL DRAWINGS FOR ADDITIONAL RE-INFORCEMENT REQUIREMENTS. WHERE ELECTRICAL SERVICES ARE RUN PARALLEL TO THE FOOTINGS. ALSO REFER TO STRUCTURAL DRAWINGS FOR THE MINIMUM CLEAR DISTANCE TO MAINTAIN BETWEEN THE FOOTING AND THE CONDUIT.

G. CONTRACTOR SHALL PROPERLY SEAL PENETRATIONS TO RATED ASSEMBLIES AND ALL EXTERIOR WALLS TO PROPERLY MAINTAIN RATING & ASSEMBLIES AND BUILDING ENVELOPE.

H. CONTRACTOR SHALL VISIT THE SITE AND FIELD VERIFY EXISTING CONDITIONS PRIOR TO BIDDING ANY WORK TO BE DONE.

I. AS A MINIMUM ALL ELECTRICAL WORK SHALL COMPLY WITH THE 2020 EDITION OF THE NATIONAL ELECTRICAL CODE.

J. REFER TO ELECTRICAL DIVISION SPECIFICATIONS FOR ADDITIONAL REQUIREMENTS.

O. AS A MINIMUM ALL LIGHTING SHALL COMPLY WITH THE 2021 EDITION OF IECC.

LIGHTING NOTES:

1. EXTEND CIRCUIT THRU MOTION SENSOR/CONTACTOR TO AUTOMATICALLY TURN LIGHTS OFF A MAXIMUM OF 20 MINUTES AFTER ALL OCCUPANTS LEAVE SPACE. MANUAL SWITCH AND/OR OCCUPANCY SENSOR, TO TURN LIGHTS "ON", TO NOT MORE THAN 50% POWER. SWITCH MAY THEN BE USED TO TURN LIGHT UP TO 100% POWER. (TYPICAL)

2. EXTEND CIRCUIT VIA SOUND BOOTH LIGHTING CONTROL DISPLAY CONSOLE. VERIFY EXACT REQUIREMENTS, SWITCHING ROUTING, MOUNTING & LOCATION, CIRCUITING W/SOUND BOOTH VENDOR AND OWNER/ARCHITECT PRIOR TO ANY ROUGH-IN (TYPICAL)

3. ALL FIXTURES DENOTED BY KEYNOTE SHALL BE ON SAME CIRCUIT & HOMERUN VIA PHOTOCELL & TIME CLOCK TO 120 VOLT MECHANICALLY HELD 6 POLE LIGHTING CONTACTOR. COORDINATE MOUNTING HEIGHT WITH ARCHITECT PRIOR TO ROUGH IN.

4. MOUNT ATTIC LIGHTS SECURELY TO ATTIC STRUCTURE (TYPICAL). EXTEND DOWN TO PILOT LITE SWITCH MOUNTED NEXT TO ATTIC ACCESS. VERIFY EXACT LOCATION & REQUIREMENTS PRIOR TO ROUGH-IN.

KING architects INC.
Barry D. King, AIA,
Architect
1312 Sampson St.
Westlake, LA 70669
337.494.0806
www.kingarchitects.net

© COPYRIGHT 2022
ALL INFORMATION, EITHER DRAWN, WRITTEN, OR IMPLIED APPEARING IN THIS DOCUMENT SHALL NOT BE DUPLICATED, DISCLOSED, OR OTHERWISE USED WITHOUT THE WRITTEN PERMISSION OF BARRY D. KING AIA. THIS DOCUMENT IS AN INSTRUMENT OF SERVICE AND IS THE SOLE PROPERTY OF THE AUTHOR. FURTHERMORE, THE USE OF THIS DOCUMENT FOR ANY PURPOSE SHALL BE REVOKED, IF THE INTENT OF THE DESIGN OR THE CONSTRUCTION TECHNIQUES OR DETAILS SHOWN HEREIN ARE NOT ADHERED TO OR THE CONTRACTUAL AGREEMENT GOVERNING THEIR USE ARE NOT STRICTLY ADHERED TO.

JOB NO: 2316
DATE: JULY 2025
DRWN. BY: PMB
CHKD. BY: PM

REVISIONS

STATE OF LOUISIANA
DAVID B. STELLY
License No. 26070
08/01/2025
PROFESSIONAL ENGINEER

GREATER ST MARY
MISSIONARY BAPTIST
1401 MOELING STREET
LAKE CHARLES, LA 70601
MINISTRY CENTER

LIGHTING PLAN - MULTI-PURPOSE

ALTERNATE #1

ADG ENGINEERING
ASSOCIATED DESIGN GROUP, INC.
3909 W Congress Street, Suite 201
Lafayette, Louisiana 70506
Phone: (337) 234-5710
Email: adginc@adginc.org

Project No. 24232

MC-E-101

2 LIGHTING CONTROL PLAN - MULTIPURPOSE 2nd FLOOR

NORTH

Photocell/Timeclock And 6-Pole Lighting Contactor For Exterior Fixtures Circuit LPB-7 Provided By Others, Unless Otherwise Noted.

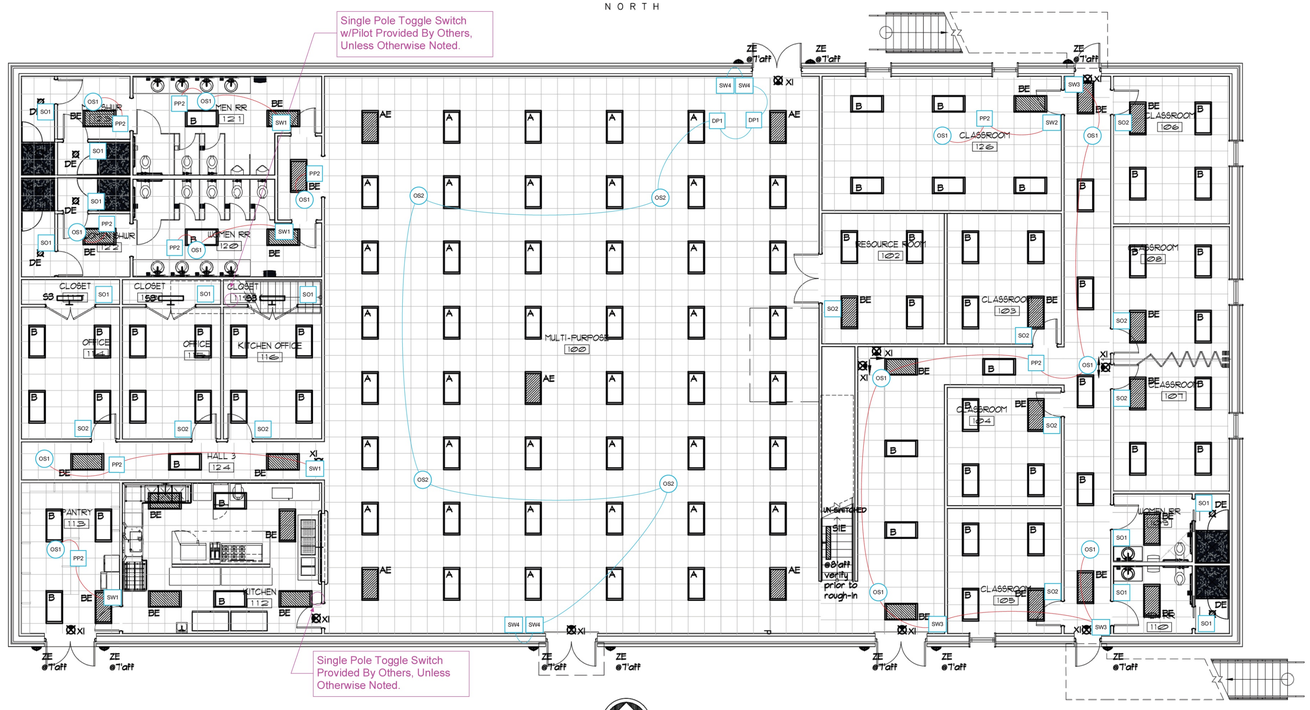

Single Pole Toggle Switch Provided By Others, Unless Otherwise Noted.

1 LIGHTING CONTROL PLAN - MULTIPURPOSE 1st FLOOR

NORTH

A LEA - LC1.1
NOT TO SCALE

LEA LIGHTING & ELECTRICAL ASSOCIATES

PRODUCT LEGEND LC1.1		
21	OS1	CM PDT 10 Ceiling Mount Sensor, Passive Dual Technology, Large Motion / Extended Range 360° Lens
4	OS2	NCM PDT 10 RJB Low Voltage Ceiling Mount Sensor, Passive Dual Technology, Large Motion / Extended Range 360° Lens, Rear RJ-45 Ports
4	SW4	NPODMA DX XX nLight Wired Aesthetic Wallpod, Raise/Lower Dimming
2	DP1	NPP16 D EFP SA Power/Relay Pack, Dimming, External Fault Protection, Vacancy (default) or Auto-On
14	PP2	PP20 Power Pack
2	SW2	SPODMA D SA XX Wall Switch, Dimming, Vacancy (default) or Auto-On
5	SW3	SPODMA SA 3X XX Wall Switch, Vacancy (default) or Auto-On, Multi-Way
4	SW1	SPODMA SA XX Wall Switch, Vacancy (default) or Auto-On
18	SO2	WSXA PDT D SA XX Wall Switch Sensor, Passive Dual Technology, Dimming, Vacancy (default) or Auto-On
15	SO1	WSXA PDT SA XX Wall Switch Sensor, Passive Dual Technology, Vacancy (default) or Auto-On

WIRE LEGEND LC1.1	
CAT5 nLight	Pre-terminated CAT5e cable for nLight communication network
LV	Low voltage cable

KING architects INC.
Barry D. King, AIA,
Architect
1312 Sampson St.
Westlake, LA 70669
337.494.0806
www.kingarchitects.net

© COPYRIGHT 2022
ALL INFORMATION, EITHER DRAWN, WRITTEN, OR IMPLIED APPEARING IN THIS DOCUMENT SHALL NOT BE DUPLICATED, DISCLOSED, OR OTHERWISE USED WITHOUT THE WRITTEN PERMISSION OF BARRY D. KING AIA. THIS DOCUMENT IS AN INSTRUMENT OF SERVICE AND IS THE SOLE PROPERTY OF THE AUTHOR. FURTHERMORE, THE USE OF THIS DOCUMENT FOR ANY PURPOSE SHALL BE REVOKED, IF THE INTENT OF THE DESIGN OR THE CONSTRUCTION TECHNIQUES OR DETAILS SHOWN HEREIN ARE NOT ADHERED TO OR THE CONTRACTUAL AGREEMENT GOVERNING THEIR USE ARE NOT STRICTLY ADHERED TO.

JOB NO: 2316
DATE: JULY 2025
DRWN. BY:
CHKD. BY:

REVISIONS

GREATER ST MARY MISSIONARY BAPTIST
1401 MOELING STREET
LAKE CHARLES, LA 70601
MINISTRY CENTER

ADG ENGINEERING
ASSOCIATED DESIGN GROUP, INC.
3909 W Congress Street, Suite 201
Lafayette, Louisiana 70506
Phone: (337) 234-5710
Email: adginc@adginc.org

Project No. 24232

LIGHTING CONTROL PLAN - MULTI-PURPOSE
ALTERNATE #1

MC-E-LC1

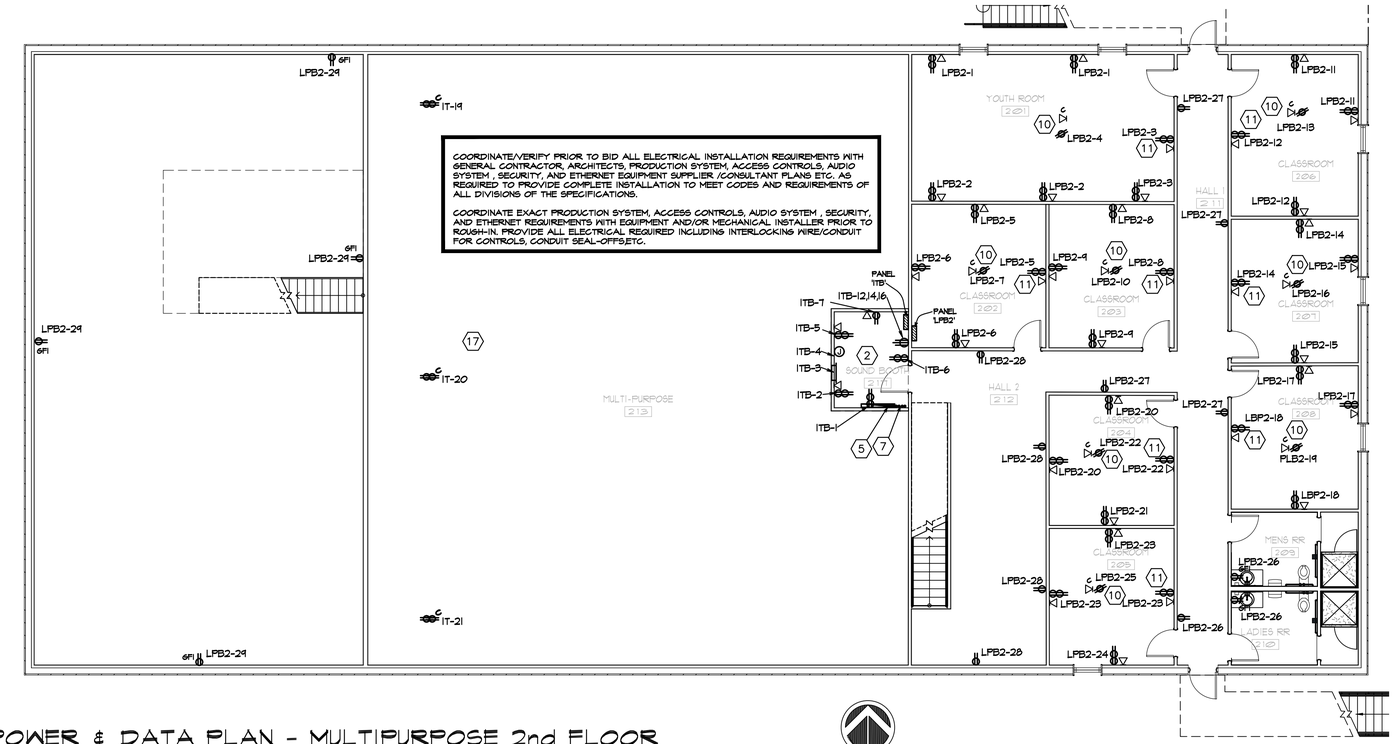

COORDINATE/VERIFY PRIOR TO BID ALL ELECTRICAL INSTALLATION REQUIREMENTS WITH GENERAL CONTRACTOR, ARCHITECTS, PRODUCTION SYSTEM, ACCESS CONTROLS, AUDIO SYSTEM , SECURITY, AND ETHERNET EQUIPMENT SUPPLIER /CONSULTANT PLANS ETC. AS REQUIRED TO PROVIDE COMPLETE INSTALLATION TO MEET CODES AND REQUIREMENTS OF ALL DIVISIONS OF THE SPECIFICATIONS.

COORDINATE EXACT PRODUCTION SYSTEM, ACCESS CONTROLS, AUDIO SYSTEM , SECURITY, AND ETHERNET REQUIREMENTS WITH EQUIPMENT AND/OR MECHANICAL INSTALLER PRIOR TO ROUGH-IN. PROVIDE ALL ELECTRICAL REQUIRED INCLUDING INTERLOCKING WIRE/CONDUIT FOR CONTROLS, CONDUIT SEAL-OFFS,ETC.

2 POWER & DATA PLAN - MULTIPURPOSE 2nd FLOOR
SCALE:1/8" = 1'-0"

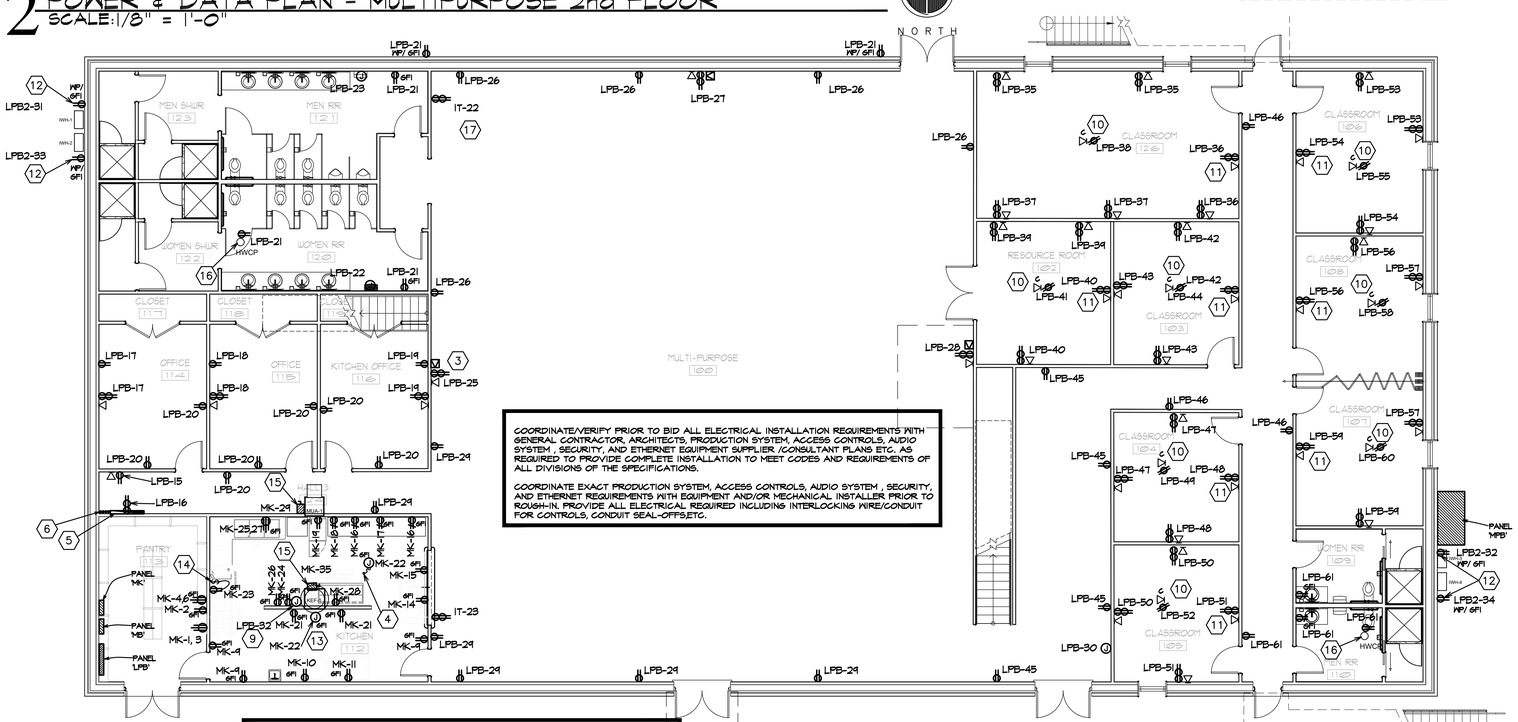

COORDINATE/VERIFY PRIOR TO BID ALL ELECTRICAL INSTALLATION REQUIREMENTS WITH GENERAL CONTRACTOR, ARCHITECTS, PRODUCTION SYSTEM, ACCESS CONTROLS, AUDIO SYSTEM , SECURITY, AND ETHERNET EQUIPMENT SUPPLIER /CONSULTANT PLANS ETC. AS REQUIRED TO PROVIDE COMPLETE INSTALLATION TO MEET CODES AND REQUIREMENTS OF ALL DIVISIONS OF THE SPECIFICATIONS.

COORDINATE EXACT PRODUCTION SYSTEM, ACCESS CONTROLS, AUDIO SYSTEM , SECURITY, AND ETHERNET REQUIREMENTS WITH EQUIPMENT AND/OR MECHANICAL INSTALLER PRIOR TO ROUGH-IN. PROVIDE ALL ELECTRICAL REQUIRED INCLUDING INTERLOCKING WIRE/CONDUIT FOR CONTROLS, CONDUIT SEAL-OFFS,ETC.

COORDINATE/VERIFY PRIOR TO BID ALL ELECTRICAL INSTALLATION REQUIREMENTS WITH GENERAL CONTRACTOR, ARCHITECTS, KITCHEN EQUIPMENT SUPPLIER, KITCHEN CONSULTANT PLANS ETC. AS REQUIRED TO PROVIDE COMPLETE INSTALLATION TO MEET CODES AND REQUIREMENTS OF ALL DIVISIONS OF THE SPECIFICATIONS.

COORDINATE EXACT REQUIREMENTS WITH KITCHEN EQUIPMENT AND/OR MECHANICAL INSTALLER PRIOR TO ROUGH-IN. PROVIDE ALL ELECTRICAL REQUIRED INCLUDING INTERLOCKING WIRE/CONDUIT FOR CONTROLS, CONDUIT SEAL-OFFS,ETC.

1 POWER & DATA PLAN - MULTIPURPOSE 1st FLOOR
SCALE:1/8" = 1'-0"

SAFETY SWITCH SCHEDULE

EQUIPMENT SERVED	AMPERAGE RATING	VOLTAGE RATING	POLES	DUTY LISTING	NEMA RATING	FUSE SIZE
MUA-1	30	240	2	HEAVY	3R/12	*
KEF-1	30	240	2	HEAVY	3R/12	*

* FUSE SWITCH AT EQUIPMENT MANUFACTURER'S RECOMMENDATIONS

GENERAL NOTES:

A. CONTRACTOR SHALL REFER TO ALL OTHER PORTIONS OF THE CONTRACT DOCUMENTS (PLANS, SPECIFICATIONS, ADDENDA, ARCHITECTURAL SUPPLEMENTAL INSTRUCTIONS AND ANY APPROVED CHANGE ORDERS) AND PROVIDE ALL LIGHT FIXTURES, OUTLETS, TELE/DATA OUTLETS, SPEAKERS, AND ASSOCIATED CIRCUITRY AS IF ORIGINALLY INCLUDED ON THE ELECTRICAL PLANS. IF THERE ARE ANY DISCREPANCIES, CONTRACTOR SHALL NOTIFY ARCHITECT/ENGINEER IN WRITING PRIOR TO ORDERING EQUIPMENT, ROUGH-IN FOR EQUIPMENT AND/OR INSTALLATION OF EQUIPMENT. PRIOR TO ROUGH-IN OF EQUIPMENT, CONTRACTOR SHALL BE RESPONSIBLE FOR OBTAINING COPIES OF APPROVED SHOP DRAWINGS OF SUCH EQUIPMENT AND REVIEWING SAID SUBMITTALS TO ENSURE COMPATIBILITY WITH THE ELECTRICAL SYSTEM. CONTRACTOR SHALL IMMEDIATELY NOTIFY ARCHITECT/ENGINEER IN WRITING OF ANY DISCREPANCIES BETWEEN THE REQUIRED ROUGH-IN REQUIREMENTS AND THE ELECTRICAL SYSTEM.

B. VERIFY EXACT MOUNTING HEIGHT OF ALL WALL MOUNTED FIXTURES W/ARCHITECT/OWNER PRIOR TO ROUGH-IN.

C. REFER TO ARCHITECTURAL REFLECTED CEILING FOR ALL CEILING MOUNTED DEVICES.

D. CONTRACTOR SHALL PROPERLY SEAL PENETRATIONS TO RATED ASSEMBLIES AND ALL EXTERIOR WALLS TO PROPERLY MAINTAIN RATING & ASSEMBLIES AND BUILDING ENVELOPE.

E. RECEPTACLES WITHIN 6' OF A SINK OR LAVATORY SHALL HAVE GFCI PROTECTION.

F. DATA DROPS SHOWN ADJACENT TO COUNTER-TOP DUPLEX RECEPTACLES SHALL BE ROUGHED-IN AT COUNTER-TOP HEIGHT ALSO.

G. COORDINATE EXACT PLACEMENT FOR ALL DEVICES WHERE MILLWORK IS PRESENT PRIOR TO ROUGH-IN. DO NOT ROUGH-IN BEHIND CABINETS, DRAWERS, ETC RENDERING DEVICE UNUSABLE.

H. ALL 20A 125V DUPLEX RECEPTACLES INSTALLED OUTDOORS SHALL HAVE GFCI PROTECTION AND SHALL RECEIVE WP WHILE IN USE COVER PLATE AS SPECIFIED.

I. CIRCUITS SHALL HAVE DEDICATED NEUTRALS. NEUTRALS SHALL NOT BE SHARED.

J. AS A MINIMUM ALL ELECTRICAL WORK SHALL COMPLY WITH THE 2020 EDITION OF THE NATIONAL ELECTRICAL CODE.

K. REFER TO ELECTRICAL DIVISION SPECIFICATIONS FOR ADDITIONAL REQUIREMENTS.

L. COMPLETE CONNECTIONS TO ALL EQUIPMENT AND PROVIDE PROPER CONDUIT SUPPORTS/STRAPS REQUIRED FOR SECURE INSTALLATIONS. COORDINATE EXACT LOCATION AND CONNECTION REQUIREMENTS WITH MECHANICAL CONTRACTOR PRIOR TO ROUGH-IN.

M. REFER TO SPECIFICATIONS PRIOR TO ANY ROUGH-IN WORK FOR SPECIFIC REQUIREMENTS RELATIVE TO ROUGH-IN OF DEVICES.

N. THE CONTRACTOR SHALL VISIT THE SITE AND THOROUGHLY FAMILIARIZE THEMSELVES WITH THE EXISTING CONDITIONS VERIFYING THAT THE WORK CAN BE PERFORMED AS DESCRIBED IN THESE DEMOLITION DRAWINGS, PRIOR TO SUBMITTING A BID.

O. PRIOR TO COMMENCING WORK, THE CONTRACTOR SHALL LOCATE ALL WORK TO REMAIN, INCLUDING, BUT NOT LIMITED TO PLUMBING, HVAC, ELECTRICAL, STRUCTURAL AND ARCHITECTURAL, AND SHALL PROTECT SUCH WORK FROM DAMAGE DURING DEMOLITION AND NEW CONSTRUCTION.

P. THE CONTRACTOR SHALL AT ALL TIMES CONSULT WITH THE ARCHITECT AND FOLLOW DIRECTIVES ISSUED BY THE ARCHITECT WHICH WILL ENSURE THE CONTINUED SAFE FUNCTIONING OF THE OWNERS OPERATIONS. THE CONTRACTOR SHALL MINIMIZE ENCUMBRANCES TO THE OWNER'S OPERATIONS AT ALL TIMES AND SHALL NOTIFY THE ARCHITECT OF ANY WORK AFFECTING THE OPERATION OF THE OWNER AT LEAST THREE DAYS PRIOR TO PERFORMING SAID WORK.

Q. BACKBOXES SHALL RECEIVE FIRE-RATED PUTTY PADS WHERE OCCURRING IN RATED WALLS.

R. THE CONTRACTOR SHALL VERIFY ALL DIMENSIONS PRIOR TO COMMENCING CONSTRUCTION. ANY DISCREPANCIES SHALL BE BROUGHT TO THE ATTENTION OF THE ARCHITECT FOR CLARIFICATION. DIMENSIONS AND CONDITIONS TYING INTO OR GOVERNED BY EXISTING CONDITIONS ARE APPROXIMATE AND ARE NOT PURPORTED TO BE CORRECT. ALL SUCH DIMENSIONS AND CONDITIONS SHALL BE FIELD VERIFIED BY THE CONTRACTOR PRIOR TO PERFORMING WORK, PREPARING SHOP DRAWINGS, OR ORDERING MATERIALS.

S. THE CONTRACTOR SHALL ASK FOR DETAILS AND/OR INSTRUCTIONS WHEN UNCERTAIN HOW TO PROCEED. THE LACK OF NOT REQUESTING DETAILS DOES NOT EXCUSE SLOPPY OR IMPROPER WORK. CORRECTION SHALL BE THE RESPONSIBILITY OF THE CONTRACTOR AT NO COSTS TO THE OWNER.

T. THE CONTRACTOR SHALL BE RESPONSIBLE FOR MOVING ALL SALVAGED ITEMS TO AN OWNER DESIGNATED STORAGE FACILITY.

POWER & DATA PLAN KEYNOTES:

1. REFER TO SPECIFICATIONS FOR TEL/DATA OUTLET REQUIREMENTS. (TYPICAL)
2. COORDINATE ROUGH-IN OF OUTLETS AT COUNTER W/ARCHITECTURAL ELEV.
3. VERIFY EXACT HEIGHT & LOCATION OF T.V., POWER & DATA OUTLETS W/ARCHITECTURAL ELEVATIONS PRIOR TO ROUGH-IN.
4. EXTEND AND CONNECT TO KITCHEN HOOD LIGHTS & EXHAUST FAN. VERIFY EXACT LOCATION AND REQUIREMENTS WITH APPROVED MANUFACTURER SPECIFICATIONS AND ARCHITECTURAL ELEV. PRIOR TO ROUGH-IN.
5. 4'x8'x3/4" PLYWOOD TELEPHONE BACKBOARD.
6. EXTEND 4 - 4" CONDUIT W/NYLON PULLSTRING TO SANCTUARY BUILDING FOR DATA/COMMUNICATIONS. INSTALL CONDUIT 36" BFG.
7. EXTEND 2 - 4" CONDUIT W/NYLON PULLSTRING TO 1ST Flr TELEPHONE BACKBOARD FOR DATA/COMMUNICATIONS.
8. MOUNT ATTIC RECEPTACLE, SECURELY TO ATTIC STRUCTURE. VERIFY EXACT LOCATION & REQUIREMENTS PRIOR TO ROUGH-IN.
9. EXTEND AND CONNECT TO RANGE HOOD FIRE SUPPRESSION SYSTEM TO AUTOMATICALLY DISCONNECT RANGE FUEL UPON SYSTEM DISCHARGE VIA ELECTRIC RELAY. INTERLOCK WITH FIRE ALARM SYSTEM. VERIFY AND PROVIDE EXACT LOCATION AND REQUIREMENTS WITH SUPPLER PRIOR TO ROUGH-IN.
10. COORDINATE EXACT PROJECTOR POWER & DATA LOCATIONS WITH ARCHITECTURAL RCP AND MECHANICAL EQUIPMENT PRIOR TO ROUGH-IN. COORDINATE TERMINATION REQUIREMENTS WITH MANUFACTURER AND INSTALLER PRIOR TO ROUGH-IN.
11. COORDINATE MULTIMEDIA OUTLET AT TEACHER'S DESK WITH A/V PROVIDER PRIOR TO ROUGH-IN.
12. MOUNT RECEPTACLE NEXT TO INSTATANEOUS WATER HEATER UNIT. VERIFY EXACT HEIGHT & LOCATION W/GENERAL CONTRACTOR PRIOR TO ROUGH-IN.
13. EXTEND AND CONNECT TO GAS VALVE FOR HOOD UNIT. VERIFY EXACT LOCATION W/MECHANICAL PRIOR TO ROUGH-IN. ENSURE PROPER OPERATION.
14. PROVIDE 120 VOLT, 20 AMP, 1 POLE RECEPTACLE (MATCH PLUG ON DISPOSAL) BELOW SINK & PROVIDE TOGGLE SWITCH ABOVE COUNTER FOR CONTROL OF DISPOSAL RECEPTACLE. VERIFY EXACT LOCATION PRIOR TO ROUGH-IN.
15. MOUNT KEF-1 & MAU-1 DISCONNECTS ON ROOF. VERIFY EXACT LOCATION W/MECHANICAL PRIOR TO ROUGH-IN. ENSURE PROPER OPERATION. EXTEND AND MAKE CONNECTIONS FROM DISCONNECT TO KITCHEN HOOD EQUIPMENT. COORDINATE CONNECTION, LOCATION & REQUIREMENTS W/MECHANICAL CONTRACTOR & KITCHEN EQUIPMENT SUPPLIER PRIOR TO ROUGH-IN. EXTEND & COMPLETE CONNECTIONS TO EQUIPMENT. REFER TO DETAIL AND SPECIFICATION FOR ADDITIONAL REQUIREMENTS.
16. EXTEND AND CONNECT TO HWCP. VERIFY EXACT LOCATION AND REQUIREMENTS WITH PLUMBING CONTRACTOR PRIOR TO ROUGH-IN.
17. ALL SOUND EQUIPMENT SHALL BE DE ENERGIZED OR MUTED UPON ACTIVATION OF FIRE AJARM SYSTEM. INTERFACE ALL SUCH CIRCUITRY AND CONTROLS WITH FIRE ALLARM PANEL (TYPICAL)

KING architects INC.
Barry D. King, AIA,
Architect
1312 Sampson St.
Westlake, LA 70669
337.494.0806
www.kingarchitects.net

© COPYRIGHT 2022
ALL INFORMATION, EITHER DRAWN, WRITTEN, OR IMPLIED APPEARING IN THIS DOCUMENT SHALL NOT BE DUPLICATED, DISCLOSED, OR OTHERWISE USED WITHOUT THE WRITTEN PERMISSION OF BARRY D. KING AIA THIS DOCUMENT IS AN INSTRUMENT OF SERVICE AND IS THE SOLE PROPERTY OF THE AUTHOR. FURTHERMORE, THE USE OF THIS DOCUMENT FOR ANY PURPOSE SHALL BE REVOKED, IF THE INTENT OF THE DESIGN OR THE CONSTRUCTION TECHNIQUES OR DETAILS SHOWN HEREIN ARE NOT ADHERED TO OR THE CONTRACTUAL AGREEMENT GOVERNING THEIR USE ARE NOT STRICTLY ADHERED TO.

JOB NO: 2316
DATE: JULY 2025
DRWN. BY: PMB
CHKD. BY: PM

REVISIONS

STATE OF LOUISIANA
DAVID B. STELLY
License No. 26070
08/01/2025
PROFESSIONAL ENGINEER

GREATER ST MARY MISSIONARY BAPTIST
1401 MOELING STREET
LAKE CHARLES, LA 70601
MINISTRY CENTER

ADG ENGINEERING
ASSOCIATED DESIGN GROUP, INC.
3909 W Congress Street, Suite 201
Lafayette, Louisiana 70506
Phone: (337) 234-5710
Email: adginc@adginc.org
Project No. 24232

POWER & DATA PLAN - MULTI-PURPOSE
ALTERNATE #1

MC-E-201

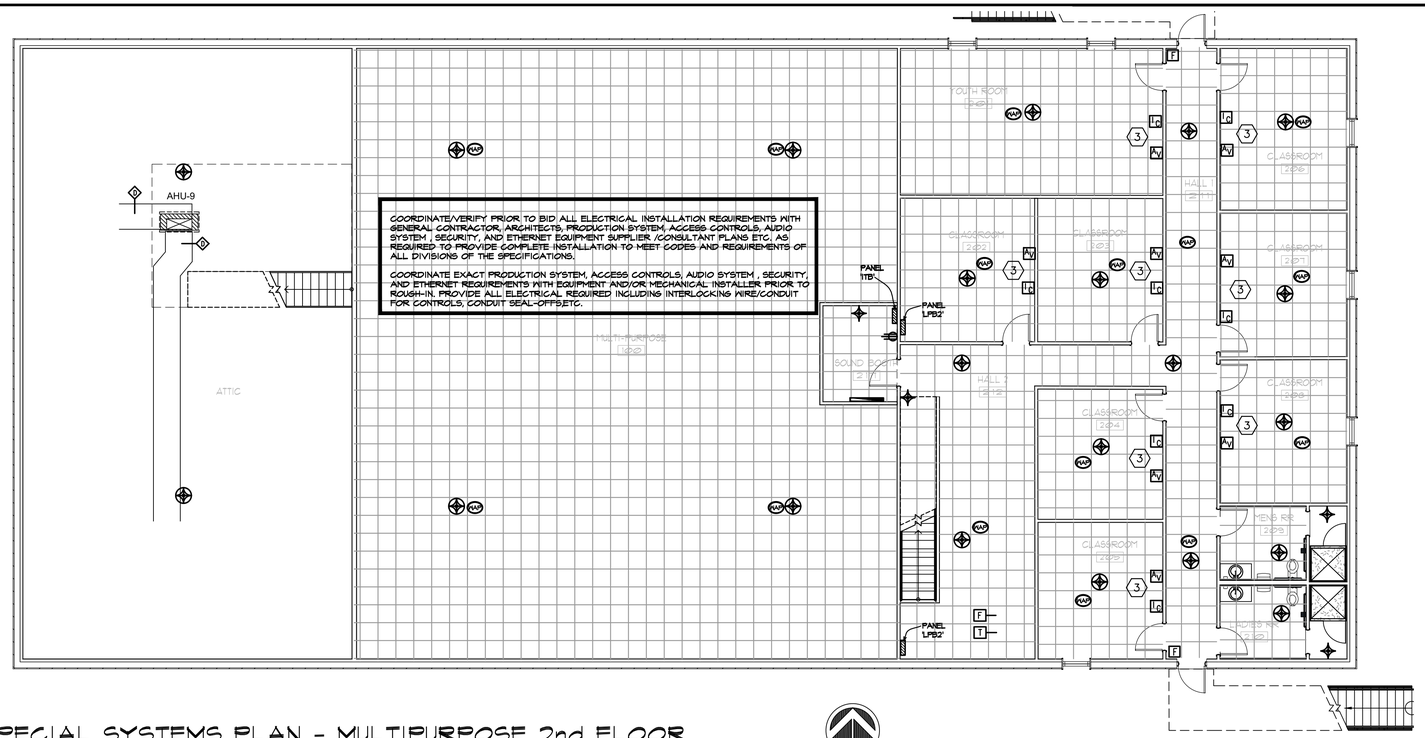

2 SPECIAL SYSTEMS PLAN - MULTIPURPOSE 2nd FLOOR
SCALE:1/8" = 1'-0"

NORTH

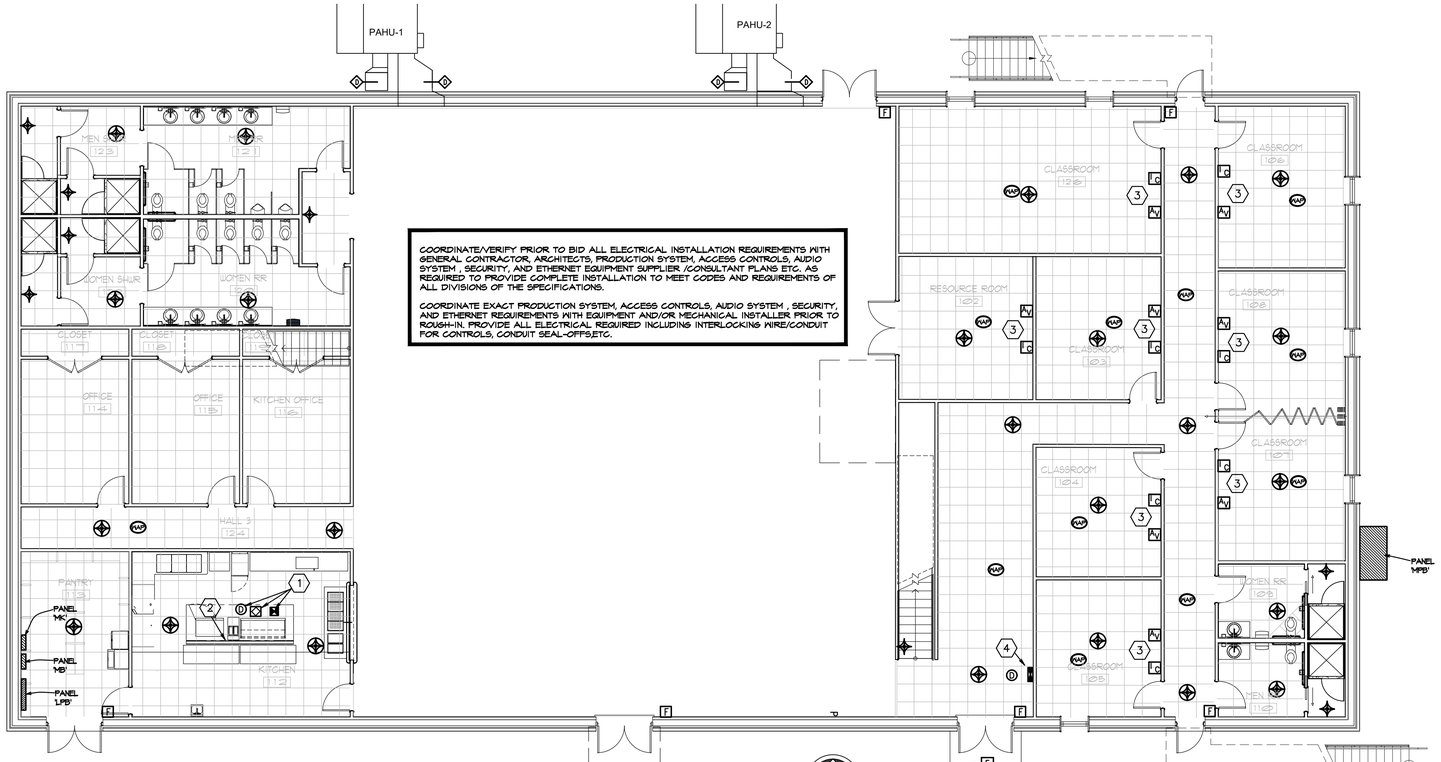

1 SPECIAL SYSTEMS PLAN - MULTIPURPOSE 1st FLOOR
SCALE:1/8" = 1'-0"

NORTH

GENERAL NOTES:

A. CONTRACTOR SHALL REFER TO ALL OTHER PORTIONS OF THE CONTRACT DOCUMENTS (PLANS, SPECIFICATIONS, ADDENDA, ARCHITECTURAL SUPPLEMENTAL INSTRUCTIONS AND ANY APPROVED CHANGE ORDERS) AND PROVIDE ALL LIGHT FIXTURES, OUTLETS, TELE/DATA OUTLETS, SPEAKERS, AND ASSOCIATED CIRCUITRY AS IF ORIGINALLY INCLUDED ON THE ELECTRICAL PLANS. IF THERE ARE ANY DISCREPANCIES, CONTRACTOR SHALL NOTIFY ARCHITECT/ENGINEER IN WRITING PRIOR TO ORDERING EQUIPMENT, ROUGH-IN FOR EQUIPMENT AND/OR INSTALLATION OF EQUIPMENT. PRIOR TO ROUGH-IN OF EQUIPMENT, CONTRACTOR SHALL BE RESPONSIBLE FOR OBTAINING COPIES OF APPROVED SHOP DRAWINGS OF SUCH EQUIPMENT AND REVIEWING SAID SUBMITTALS TO ENSURE COMPATIBILITY WITH THE ELECTRICAL SYSTEM. CONTRACTOR SHALL IMMEDIATELY NOTIFY ARCHITECT/ENGINEER IN WRITING OF ANY DISCREPANCIES BETWEEN THE REQUIRED ROUGH-IN REQUIREMENTS AND THE ELECTRICAL SYSTEM.

B. VERIFY EXACT MOUNTING HEIGHT OF ALL WALL MOUNTED FIXTURES W/ARCHITECT/OWNER PRIOR TO ROUGH-IN.

C. REFER TO ARCHITECTURAL REFLECTED CEILING FOR ALL CEILING MOUNTED DEVICES.

D. CONTRACTOR SHALL PROPERLY SEAL PENETRATIONS TO RATED ASSEMBLIES AND ALL EXTERIOR WALLS TO PROPERLY MAINTAIN RATING & ASSEMBLIES AND BUILDING ENVELOPE.

E. RECEPTACLES WITHIN 6' OF A SINK OR LAVATORY SHALL HAVE GFCI PROTECTION.

F. DATA DROPS SHOWN ADJACENT TO COUNTER-TOP DUPLEX RECEPTACLES SHALL BE ROUGHED-IN AT COUNTER-TOP HEIGHT ALSO.

G. COORDINATE EXACT PLACEMENT FOR ALL DEVICES WHERE MILLWORK IS PRESENT PRIOR TO ROUGH-IN. DO NOT ROUGH-IN BEHIND CABINETS, DRAWERS, ETC RENDERING DEVICE UNUSABLE.

H. ALL 20A 125V DUPLEX RECEPTACLES INSTALLED OUTDOORS SHALL HAVE GFCI PROTECTION AND SHALL RECEIVE WP WHILE IN USE COVER PLATE AS SPECIFIED.

I. CIRCUITS SHALL HAVE DEDICATED NEUTRALS. NEUTRALS SHALL NOT BE SHARED.

J. AS A MINIMUM ALL ELECTRICAL WORK SHALL COMPLY WITH THE 2020 EDITION OF THE NATIONAL ELECTRICAL CODE.

K. REFER TO ELECTRICAL DIVISION SPECIFICATIONS FOR ADDITIONAL REQUIREMENTS.

L. COMPLETE CONNECTIONS TO ALL EQUIPMENT AND PROVIDE PROPER CONDUIT SUPPORTS/STRAPS REQUIRED FOR SECURE INSTALLATIONS. COORDINATE EXACT LOCATION AND CONNECTION REQUIREMENTS WITH MECHANICAL CONTRACTOR PRIOR TO ROUGH-IN.

M. REFER TO SPECIFICATIONS PRIOR TO ANY ROUGH-IN WORK FOR SPECIFIC REQUIREMENTS RELATIVE TO ROUGH-IN OF DEVICES.

N. THE CONTRACTOR SHALL VISIT THE SITE AND THOROUGHLY FAMILIARIZE THEMSELVES WITH THE EXISTING CONDITIONS VERIFYING THAT THE WORK CAN BE PERFORMED AS DESCRIBED IN THESE DEMOLITION DRAWINGS, PRIOR TO SUBMITTING A BID.

O. PRIOR TO COMMENCING WORK, THE CONTRACTOR SHALL LOCATE ALL WORK TO REMAIN, INCLUDING, BUT NOT LIMITED TO PLUMBING, HVAC, ELECTRICAL, STRUCTURAL AND ARCHITECTURAL, AND SHALL PROTECT SUCH WORK FROM DAMAGE DURING DEMOLITION AND NEW CONSTRUCTION.

P. THE CONTRACTOR SHALL AT ALL TIMES CONSULT WITH THE ARCHITECT AND FOLLOW DIRECTIVES ISSUED BY THE ARCHITECT WHICH WILL ENSURE THE CONTINUED SAFE FUNCTIONING OF THE OWNERS OPERATIONS. THE CONTRACTOR SHALL MINIMIZE ENCUMBRANCES TO THE OWNER'S OPERATIONS AT ALL TIMES AND SHALL NOTIFY THE ARCHITECT OF ANY WORK AFFECTING THE OPERATION OF THE OWNER AT LEAST THREE DAYS PRIOR TO PERFORMING SAID WORK.

Q. BACKBOXES SHALL RECEIVE FIRE-RATED PUTTY PADS WHERE OCCURRING IN RATED WALLS.

R. THE CONTRACTOR SHALL VERIFY ALL DIMENSIONS PRIOR TO COMMENCING CONSTRUCTION. ANY DISCREPANCIES SHALL BE BROUGHT TO THE ATTENTION OF THE ARCHITECT FOR CLARIFICATION. DIMENSIONS AND CONDITIONS TYING INTO OR GOVERNED BY EXISTING CONDITIONS ARE APPROXIMATE AND ARE NOT PURPORTED TO BE CORRECT. ALL SUCH DIMENSIONS AND CONDITIONS SHALL BE FIELD VERIFIED BY THE CONTRACTOR PRIOR TO PERFORMING WORK, PREPARING SHOP DRAWINGS, OR ORDERING MATERIALS.

S. THE CONTRACTOR SHALL ASK FOR DETAILS AND/OR INSTRUCTIONS WHEN UNCERTAIN HOW TO PROCEED. THE LACK OF NOT REQUESTING DETAILS DOES NOT EXCUSE SLOPPY OR IMPROPER WORK. CORRECTION SHALL BE THE RESPONSIBILITY OF THE CONTRACTOR AT NO COSTS TO THE OWNER.

T. THE CONTRACTOR SHALL BE RESPONSIBLE FOR MOVING ALL SALVAGED ITEMS TO AN OWNER DESIGNATED STORAGE FACILITY.

U. INDICATING CIRCUIT LAYOUT SHALL BE BASED ON 1.5 AMP PER INDICATING CIRCUIT, AVAILABLE NUMBER AND LAYOUT OF CIRCUITS MAY BE REVISED UPON APPROVAL OF THE ENGINEER IF AVAILABLE INDICATING APPLIANCE POWER PER CIRCUIT DIFFERS FROM 1.5 AMP UTILIZED IN DESIGN. HOWEVER, THE DESIGN SHALL NOT RESULT IN A LOAD GREATER THAN (80) EIGHTY PERCENT OF THE AVAILABLE POWER FOR THE ALARM INDICATING CIRCUIT.

V. CONNECTION OF FACP TO 120 VOLT POWER SUPPLY SHALL BE ON A DEDICATED BRANCH CIRCUIT, THE CIRCUIT DISCONNECTION MEANS SHALL HAVE A RED MARKING, BE ACCESSIBLE ONLY TO AUTHORIZED PERSONNEL AND BE IDENTIFIED AS "FIRE ALARM CIRCUIT CONTROL". THE LOCATION OF THE CIRCUIT DISCONNECT MEANS SHALL BE PERMANENTLY IDENTIFIED AT THE FIRE ALARM CONTROL UNIT.

W. ALL SMOKE DETECTORS SHALL BE MOUNTED NO LESS THAN (3) THREE FEET AWAY FROM ALL A/C VENTS.

X. CONTRACTOR SHALL REFER TO SITE PLAN(S) FOR ADDITIONAL WORK.

Y. CONTRACTOR SHALL REFER TO APPROVED FIRE PROTECTION SYSTEM SHOP DRAWINGS AND SHALL PROVIDE PROPER FIRE ALARM SYSTEM INTERFACE TO ALL FLOW SWITCHES, TAMPER SWITCHES, PRESSURE SWITCHES, FIRE PUMP INTERFACE, ETC., AS REQUIRED BY CODE AT NO ADDITIONAL COST TO THE OWNER.

Z. CONTRACTOR SHALL PROVIDE AREA SMOKE DETECTOR AT LOCATIONS OF FIRE ALARM EQUIPMENT AS REQUIRED BY NFPA 72.

AA. CONTRACTOR SHALL INSTALL SURGE PROTECTION IN ACCORDANCE WITH NFPA 70 AND 72 AT ALL POINTS WHERE FIRE ALARM CIRCUITS ENTER OR LEAVE THE BUILDING.

SPECIAL SYSTEMS PLAN KEYNOTES:

1. RANGE HOOD FIRE SUPPRESSION MONITOR, SMOKE & AUDIBLE/VISUAL ALARM. HOOD SHALL AUTOMATICALLY DISCONNECT RANGE FUEL UPON SYSTEM DISCHARGE VIA ELECTRIC RELAY. INTERLOCK WITH FIRE ALARM SYSTEM. CONNECT TO SHUNT TRIP BREAKER POWERING STOVE.
2. EXTEND AND CONNECT TO RANGE HOOD FIRE SUPPRESSION SYSTEM TO AUTOMATICALLY DISCONNECT RANGE FUEL UPON SYSTEM DISCHARGE VIA ELECTRIC RELAY. INTERLOCK WITH FIRE ALARM SYSTEM. VERIFY AND PROVIDE EXACT LOCATION AND REQUIREMENTS WITH SUPPLIER PRIOR TO ROUGH-IN.
3. COORDINATE MULTIMEDIA OUTLET AT TEACHER'S DESK WITH A/V PROVIDER PRIOR TO ROUGH-IN.
4. PROVIDE AND INSTALL 2"C W/ FIBER OPTIC CABLE BETWEEN FIRE ALARM SYSTEM CONTROL PANELS TO PROPERLY NETWORK THE TWO SYSTEMS. PROVIDE AND INSTALL ALL REQUIRED NETWORK INTERFACE CARDS IN EACH PANEL.

FIRE ALARM DEVICES SHOWN ARE PRESCRIPTIVE.* FINAL DESIGN TO BE COMPLETED BY FIRE ALARM CONTRACTOR AND APPROVED BY FIRE MARSHALL PRIOR TO INSTALLATION.

ADG ENGINEERING
ASSOCIATED DESIGN GROUP, INC.
3909 W Congress Street, Suite 201
Lafayette, Louisiana 70506
Phone: (337) 234-5710
Email: adginc@adginc.org
Project No. 24232

KING architects INC.
Barry D. King, AIA,
Architect
1312 Sampson St.
Westlake, LA 70669
337.494.0806
www.kingarchitects.net

© COPYRIGHT 2022
ALL INFORMATION, EITHER DRAWN, WRITTEN, OR IMPLIED APPEARING IN THIS DOCUMENT SHALL NOT BE DUPLICATED, DISCLOSED, OR OTHERWISE USED WITHOUT THE WRITTEN PERMISSION OF BARRY D. KING AIA. THIS DOCUMENT IS AN INSTRUMENT OF SERVICE AND IS THE SOLE PROPERTY OF THE AUTHOR. FURTHERMORE, THE USE OF THIS DOCUMENT FOR ANY PURPOSE SHALL BE REVOKED, IF THE INTENT OF THE DESIGN OR THE CONSTRUCTION TECHNIQUES OR DETAILS SHOWN HEREIN ARE NOT ADHERED TO OR THE CONTRACTUAL AGREEMENT GOVERNING THEIR USE ARE NOT STRICTLY ADHERED TO.

JOB NO:	2316
DATE:	JULY 2025
DRWN. BY:	PMB
CHKD. BY:	PM

REVISIONS

STATE OF LOUISIANA
DAVID B. STELLY
License No. 26070
08/01/2025
PROFESSIONAL ENGINEER

GREATER ST MARY MISSIONARY BAPTIST
1401 MOELING STREET
LAKE CHARLES, LA 70601
MINISTRY CENTER

SPECIAL SYSTEMS PLAN - MULTI-PURPOSE
ALTERNATE #1

MC-E-301

SAFETY SWITCH SCHEDULE

EQUIPMENT SERVED	AMPERAGE RATING	VOLTAGE RATING	POLES	DUTY LISTING	NEMA RATING	FUSE SIZE
AHU-9	100	240	3	HEAVY	1	*
MSCU-2A	100	240	3	HEAVY	3R/12	*
MSCU-2B	100	240	3	HEAVY	3R/12	*
MSCU-3A	100	240	3	HEAVY	3R/12	*
MSCU-3B	100	240	3	HEAVY	3R/12	*
CU-9	60	240	3	HEAVY	3R/12	*
PAHU-1	200	240	3	HEAVY	3R/12	*
PAHU-2	200	240	3	HEAVY	3R/12	*

* FUSE SWITCH AT EQUIPMENT MANUFACTURER'S RECOMMENDATIONS

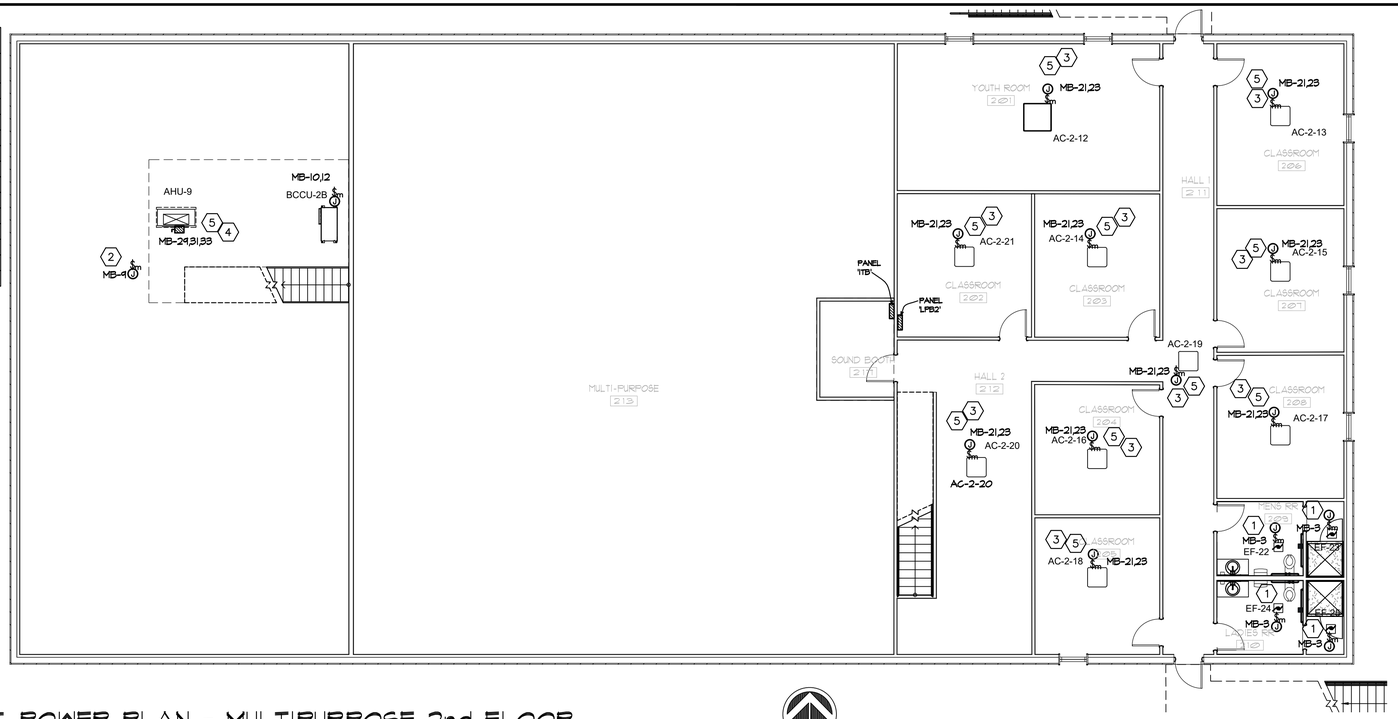

2 HVAC POWER PLAN - MULTIPURPOSE 2nd FLOOR
SCALE: 1/8" = 1'-0"

NORTH

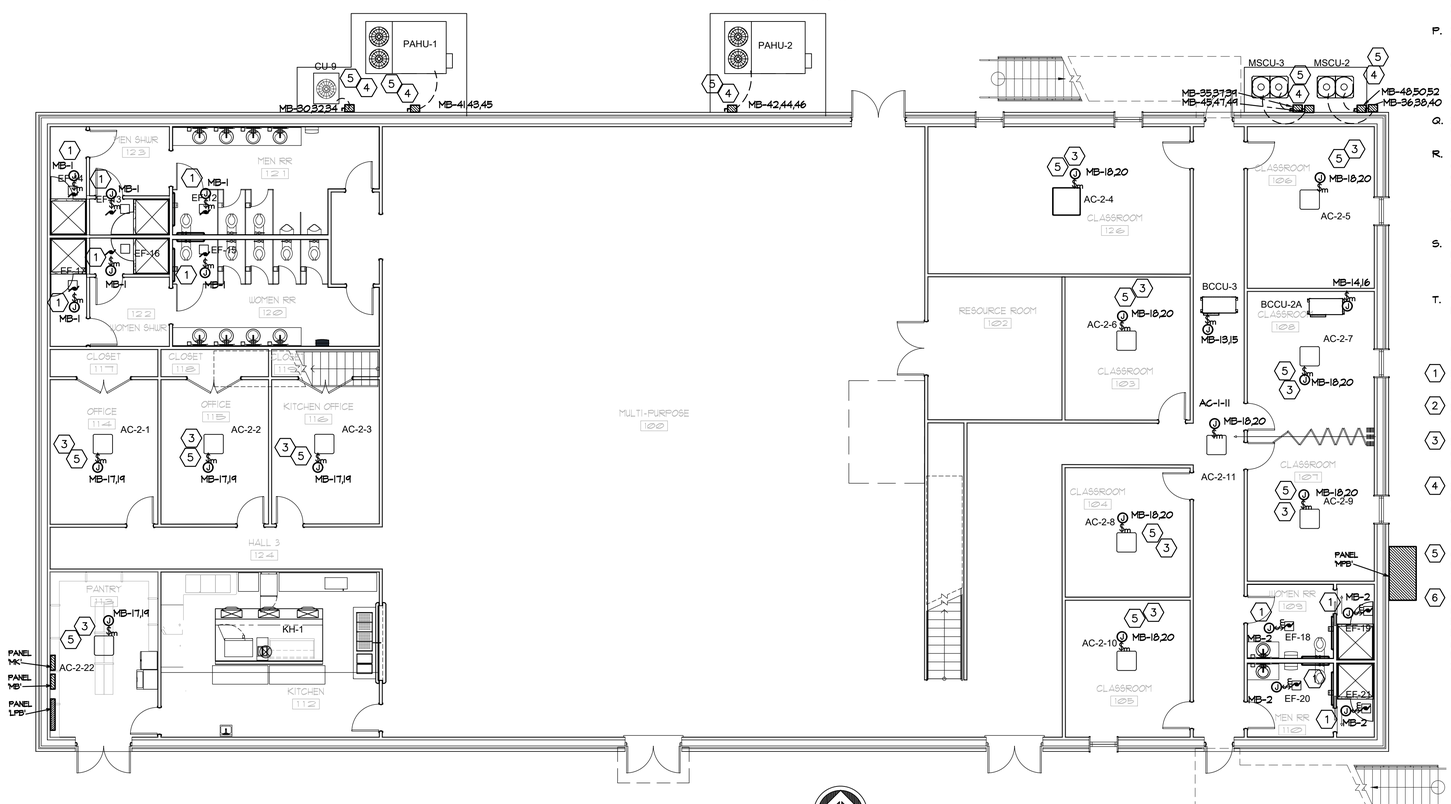

1 HVAC POWER PLAN - MULTIPURPOSE 1st FLOOR
SCALE: 1/8" = 1'-0"

NORTH

GENERAL NOTES:

A. CONTRACTOR SHALL REFER TO ALL OTHER PORTIONS OF THE CONTRACT DOCUMENTS (PLANS, SPECIFICATIONS, ADDENDA, ARCHITECTURAL SUPPLEMENTAL INSTRUCTIONS AND ANY APPROVED CHANGE ORDERS) AND PROVIDE ALL LIGHT FIXTURES, OUTLETS, TELE/DATA OUTLETS, SPEAKERS, AND ASSOCIATED CIRCUITRY AS IF ORIGINALLY INCLUDED ON THE ELECTRICAL PLANS. IF THERE ARE ANY DISCREPANCIES, CONTRACTOR SHALL NOTIFY ARCHITECT/ENGINEER IN WRITING PRIOR TO ORDERING EQUIPMENT, ROUGH-IN FOR EQUIPMENT AND/OR INSTALLATION OF EQUIPMENT. PRIOR TO ROUGH-IN OF EQUIPMENT, CONTRACTOR SHALL BE RESPONSIBLE FOR OBTAINING COPIES OF APPROVED SHOP DRAWINGS OF SUCH EQUIPMENT AND REVIEWING SAID SUBMITTALS TO ENSURE COMPATIBILITY WITH THE ELECTRICAL SYSTEM. CONTRACTOR SHALL IMMEDIATELY NOTIFY ARCHITECT/ENGINEER IN WRITING OF ANY DISCREPANCIES BETWEEN THE REQUIRED ROUGH-IN REQUIREMENTS AND THE ELECTRICAL SYSTEM.

B. VERIFY EXACT MOUNTING HEIGHT OF ALL WALL MOUNTED FIXTURES WARCHITECT/OWNER PRIOR TO ROUGH-IN.

C. REFER TO ARCHITECTURAL REFLECTED CEILING FOR ALL CEILING MOUNTED DEVICES.

D. CONTRACTOR SHALL PROPERLY SEAL PENETRATIONS TO RATED ASSEMBLIES AND ALL EXTERIOR WALLS TO PROPERLY MAINTAIN RATING & ASSEMBLIES AND BUILDING ENVELOPE.

E. RECEPTACLES WITHIN 6' OF A SINK OR LAVATORY SHALL HAVE GFCI PROTECTION.

F. DATA DROPS SHOWN ADJACENT TO COUNTER-TOP DUPLEX RECEPTACLES SHALL BE ROUSHED-IN AT COUNTER-TOP HEIGHT ALSO.

G. COORDINATE EXACT PLACEMENT FOR ALL DEVICES WHERE MILLWORK IS PRESENT PRIOR TO ROUGH-IN. DO NOT ROUGH-IN BEHIND CABINETS, DRAWERS, ETC RENDERING DEVICE UNUSABLE.

H. ALL 20A 125V DUPLEX RECEPTACLES INSTALLED OUTDOORS SHALL HAVE GFCI PROTECTION AND SHALL RECEIVE WP WHILE IN USE COVER PLATE AS SPECIFIED.

I. CIRCUITS SHALL HAVE DEDICATED NEUTRALS. NEUTRALS SHALL NOT BE SHARED.

J. AS A MINIMUM ALL ELECTRICAL WORK SHALL COMPLY WITH THE 2020 EDITION OF THE NATIONAL ELECTRICAL CODE.

K. REFER TO ELECTRICAL DIVISION SPECIFICATIONS FOR ADDITIONAL REQUIREMENTS.

L. COMPLETE CONNECTIONS TO ALL EQUIPMENT AND PROVIDE PROPER CONDUIT SUPPORTS/STRAPS REQUIRED FOR SECURE INSTALLATIONS. COORDINATE EXACT LOCATION AND CONNECTION REQUIREMENTS WITH MECHANICAL CONTRACTOR PRIOR TO ROUGH-IN.

M. REFER TO SPECIFICATIONS PRIOR TO ANY ROUGH-IN WORK FOR SPECIFIC REQUIREMENTS RELATIVE TO ROUGH-IN OF DEVICES.

N. THE CONTRACTOR SHALL VISIT THE SITE AND THOROUGHLY FAMILIARIZE THEMSELVES WITH THE EXISTING CONDITIONS VERIFYING THAT THE WORK CAN BE PERFORMED AS DESCRIBED IN THESE DEMOLITION DRAWINGS, PRIOR TO SUBMITTING A BID.

O. PRIOR TO COMMENCING WORK, THE CONTRACTOR SHALL LOCATE ALL WORK TO REMAIN, INCLUDING, BUT NOT LIMITED TO PLUMBING, HVAC, ELECTRICAL, STRUCTURAL AND ARCHITECTURAL, AND SHALL PROTECT SUCH WORK FROM DAMAGE DURING DEMOLITION AND NEW CONSTRUCTION.

P. THE CONTRACTOR SHALL AT ALL TIMES CONSULT WITH THE ARCHITECT AND FOLLOW DIRECTIVES ISSUED BY THE ARCHITECT WHICH WILL ENSURE THE CONTINUED SAFE FUNCTIONING OF THE OWNERS OPERATIONS. THE CONTRACTOR SHALL MINIMIZE ENCUMBRANCES TO THE OWNER'S OPERATIONS AT ALL TIMES AND SHALL NOTIFY THE ARCHITECT OF ANY WORK AFFECTING THE OPERATION OF THE OWNER AT LEAST THREE DAYS PRIOR TO PERFORMING SAID WORK.

Q. BACKBOXES SHALL RECEIVE FIRE-RATED PUTTY PADS WHERE OCCURRING IN RATED WALLS.

R. THE CONTRACTOR SHALL VERIFY ALL DIMENSIONS PRIOR TO COMMENCING CONSTRUCTION. ANY DISCREPANCIES SHALL BE BROUGHT TO THE ATTENTION OF THE ARCHITECT FOR CLARIFICATION. DIMENSIONS AND CONDITIONS TYING INTO OR GOVERNED BY EXISTING CONDITIONS ARE APPROXIMATE AND ARE NOT PURPORTED TO BE CORRECT. ALL SUCH DIMENSIONS AND CONDITIONS SHALL BE FIELD VERIFIED BY THE CONTRACTOR PRIOR TO PERFORMING WORK, PREPARING SHOP DRAWINGS, OR ORDERING MATERIALS.

S. THE CONTRACTOR SHALL ASK FOR DETAILS AND/OR INSTRUCTIONS WHEN UNCERTAIN HOW TO PROCEED. THE LACK OF NOT REQUESTING DETAILS DOES NOT EXCUSE SLOPPY OR IMPROPER WORK. CORRECTION SHALL BE THE RESPONSIBILITY OF THE CONTRACTOR AT NO COSTS TO THE OWNER.

T. THE CONTRACTOR SHALL BE RESPONSIBLE FOR MOVING ALL SALVAGED ITEMS TO AN OWNER DESIGNATED STORAGE FACILITY.

HVAC POWER PLAN KEYNOTES:

1. EXTEND AND CONNECT TO SENSOR (PROVIDED BY MECH.) COORDINATE EXACT LOCATION W/MECHANICAL CONTRACTOR PRIOR TO ROUGH-IN.
2. EXTEND AND CONNECT TO MOTORIZED DAMPER. COORDINATE EXACT LOCATION W/MECHANICAL CONTRACTOR PRIOR TO ROUGH-IN.
3. EXTEND AND ROUTE 1"c TO OUTDOOR CU UNIT FOR CONTROLS. COORDINATE CONNECTION LOCATION & REQUIREMENTS W/MECHANICAL CONTRACTOR PRIOR TO ROUGH-IN. EXTEND & COMPLETE CONNECTIONS TO EQUIPMENT.
4. EXTEND AND MAKE CONNECTIONS FROM DISCONNECT TO MECHANICAL EQUIPMENT. COORDINATE CONNECTION LOCATION & REQUIREMENTS W/MECHANICAL CONTRACTOR PRIOR TO ROUGH-IN. EXTEND & COMPLETE CONNECTIONS TO EQUIPMENT. REFER TO DETAIL AND SPECIFICATION FOR ADDITIONAL REQUIREMENTS.
5. COMPLETE CONNECTIONS TO EQUIPMENT. COORDINATE CONNECTION REQUIREMENTS W/MECHANICAL CONTRACTOR PRIOR TO ROUGH-IN. REFER TO DETAIL AND SPECIFICATION FOR ADDITIONAL REQUIREMENTS.
6. MOUNT KEF-1 & MAU-1 DISCONNECTS ON ROOF. VERIFY EXACT LOCATION W/MECHANICAL PRIOR TO ROUGH-IN. ENSURE PROPER OPERATION. EXTEND AND MAKE CONNECTIONS FROM DISCONNECT TO KITCHEN HOOD EQUIPMENT. COORDINATE CONNECTION, LOCATION & REQUIREMENTS W/MECHANICAL CONTRACTOR & KITCHEN EQUIPMENT SUPPLIER PRIOR TO ROUGH-IN. EXTEND & COMPLETE CONNECTIONS TO EQUIPMENT. REFER TO DETAIL AND SPECIFICATION FOR ADDITIONAL REQUIREMENTS.

ADG ENGINEERING
ASSOCIATED DESIGN GROUP, INC.
3909 W Congress Street, Suite 201
Lafayette, Louisiana 70506
Phone: (337) 234-5710
Email: adginc@adginc.org
Project No. 24232

KING architects INC.
Barry D. King, AIA,
Architect
1312 Sampson St.
Westlake, LA 70669
337.494.0806
www.kingarchitects.net

© COPYRIGHT 2022
ALL INFORMATION, EITHER DRAWN, WRITTEN, OR IMPLIED APPEARING IN THIS DOCUMENT SHALL NOT BE DUPLICATED, DISCLOSED, OR OTHERWISE USED WITHOUT THE WRITTEN PERMISSION OF BARRY D. KING AIA THIS DOCUMENT IS AN INSTRUMENT OF SERVICE AND IS THE SOLE PROPERTY OF THE AUTHOR. FURTHERMORE, THE USE OF THIS DOCUMENT FOR ANY PURPOSE SHALL BE REVOKED, IF THE INTENT OF THE DESIGN OR THE CONSTRUCTION TECHNIQUES OR DETAILS SHOWN HEREIN ARE NOT ADHERED TO OR THE CONTRACTUAL AGREEMENT GOVERNING THEIR USE ARE NOT STRICTLY ADHERED TO.

JOB NO:	2316
DATE:	JULY 2025
DRWN. BY:	PMB
CHKD. BY:	PM

REVISIONS

STATE OF LOUISIANA
DAVID B. STELLY
License No. 26070
08/01/2025
PROFESSIONAL ENGINEER

GREATER ST MARY MISSIONARY BAPTIST
1401 MOELING STREET
LAKE CHARLES, LA 70601
MINISTRY CENTER

HVAC POWER PLAN - MULTI-PURPOSE

ALTERNATE #1

MC-E-401

LIGHTING FIXTURE SCHEDULE

MARK	DESCRIPTION	LUMENS	VOLTS	MOUNTING	MANUFACTURER	CATALOG NUMBER	WATTAGE
A	2x4 FLAT PANEL	5983LM	MVOLTS	RECESSED	LITHONIA	CPX 2X4 6000ML 80CRI 35K SWL MIN10 ZT MVOLT	41.8
AE	2x4 FLAT PANEL w/BATTERY PACK	5983LM	MVOLTS	RECESSED	LITHONIA	CPX 2X4 6000ML 80CRI 35K SWL MIN10 ZT MVOLT E10WLCP	41.8
B	2x4 FLAT PANEL	4986LM	MVOLTS	RECESSED	LITHONIA	CPX 2X4 4000ML 80CRI 35K SWL MIN10 ZT MVOLT	34.8
BE	2x4 FLAT PANEL w/BATTERY PACK	4986LM	MVOLTS	RECESSED	LITHONIA	CPX 2X4 4000ML 80CRI 35K SWL MIN10 ZT MVOLT E10WLCP	34.8
D	LED DOWN LIGHT	1573LM	MVOLTS	RECESSED	LITHONIA	LDN6 35/15 L06AR LS MVOLT EZ10	17.52
DE	LED DOWN LIGHT w/BATTERY PACK	1573LM	MVOLTS	RECESSED	LITHONIA	LDN6 35/15 L06AR LS MVOLT EZ10 EZ10	17.52
P3	THREE HEAD AREA LIGHT	42545LM	MVOLT	25'POLE	LITHONIA	DSX1 LED P4 40K T4M MVOLT RPA DBLXD	375
P4	FOUR HEAD AREA LIGHT	56727LM	MVOLT	25'POLE	LITHONIA	DSX1 LED P4 40K T4M MVOLT RPA DBLXD	500
PP	POLE w/ELECTRICAL DUPLEX RECEPTACLES & WIND 150 MPH RATING	N/A	N/A	25'POLE	HAPCO	RSS 25 B 4 – 4 D** GF1 *	N/A
S	4' LED LINEAR	7517LM	MVOLTS	SURFACE	LITHONIA	CLX L48 7000LM SEF RDL MVOLT 35K GZ10 80CRI	49.05
SE	4' LED LINEAR w/BATTERY PACK	7517LM	MVOLTS	SURFACE	LITHONIA	CLX L48 7000LM SEF RDL MVOLT 35K GZ10 80CRI E10WCP	49.05
S1E	4' LED LINEAR w/BATTERY PACK	2737LM	MVOLTS	SURFACE	LITHONIA	CLX L48 3000LM SEF RDL MVOLT 35K GZ10 80CRI E10WCP	20.32
LC	LIGHTING CONTROL CONSOLE	N/A	120	SURFACE	PATHWAY	PWCOG DT 512 (1)	15w
WP	EXTERIOR WALL PACK	2996LM	MVOLT	SURFACE	LITHONIA	TWX1 LED P2 40K MVOLT *	22.46
WW	LED WALL WASHER	1573LM	MVOLTS	RECESSED	LITHONIA	LDN6 35/15 LW6AR LS MVOLT EZ10	17.52
X1	SINGLE FACE EXIT SIGN LIGHT	L.E.D	120/277	UNIVERSAL	LITHONIA	LQC 1 R EL N	--
X2	DOUBLE FACE EXIT SIGN LIGHT	L.E.D	120/277	UNIVERSAL	LITHONIA	LQC 2 R EL N	--
ZE	EXTERIOR WALL SCONCE w/BATTERY PACK	1500LM	MVOLT	SURFACE	LITHONIA	ARC1 LED P1 40K E4WH	11

* CUSTOM COLOR BY ARCHITECT TO BE SELECTED DURING SHOP DRAWING PROCESS

** MOUNTING OPTIONS AS REQUIRED TO BE SELECTED DURING SHOP DRAWING PROCESS

(1) PROVIDE ALL CONTROL WIRING, ACCESSORIES AS REQUIRED & COORDINATE REQUIREMENTS WITH SOUND BOOTH SUPPLIER & OWNER PRIOR TO BID.

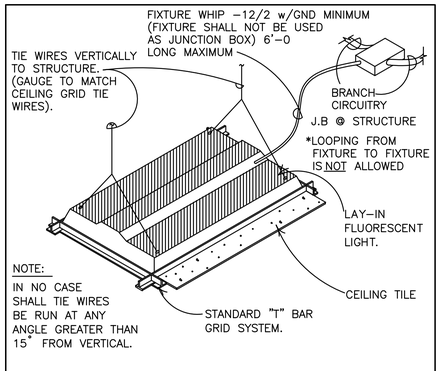

1 TYP. LIGHT FIXTURE INSTALLATION
NO SCALE

AGREEMENT FOR SINGLE USE OF ELECTRONIC (CAD) MEDIA ADG ENGINEERING

At your request, and at a cost of $10.00 per drawing sheet, to facilitate the preparation of shop drawings or submittals, we will provide electronic files for your singular, limited use specifically on the project in question, subject to the following terms and conditions:

The electronic files are compatible with AutoCad 2010. We make no representation as to the compatibility of these files with your hardware or your software beyond the specified release of the referenced specifications. CAD files remain the property of the Engineer of Record and in no case shall the transfer of these files be considered a sale.

Data contained on these electronic files is part of the design professionals instrument of service and shall not be used by you or anyone else receiving this data through or from you for any purpose other than as source of information for the referenced project and shall not be relied upon as an authoritative source of data for design or layout. Any use by your organization or by others will be at your sole risk and without liability or legal exposure to ADG, Inc. You agree to make no claim and hereby waive, to the fullest extend permitted by law, any claim or cause of action of any nature against ADG, Inc. its officers, directors, employees, agents or subconsultants which may arise out of or in connection with your use of the electronic files.

Furthermore, you shall, to the fullest extend permitted by law, indemnify and hold harmless ADG, Inc. for all claims, damages, losses and expenses, including attorney's fees arising out of or resulting from your use of these electronic files.

By requesting electronic media, requestor is acknowledging acceptance of all verbiage contained in this form. See specifications for additional information.

2 AGREEMENT FOR SINGLE USE OF ELECTRONIC (CAD) MEDIA NO SCALE

ELECTRICAL LEGEND

SYMBOL	DESCRIPTION
	LIGHTING FIXTURE – SEE FIXTURE SCHEDULE
	LIGHTING FIXTURE – SEE FIXTURE SCHEDULE
	EXIT SIGN FIXTURE – SEE FIXTURE SCHEDULE
$	SINGLE POLE TOGGLE SWITCH
$3	THREE–WAY TOGGLE SWITCH
$PD	SINGLE POLE DIMMER SWITCH
	DUPLEX CONVENIENCE OUTLET
	COUNTER TOP MOUNTING HEIGHT (CLEAR BACK SPLASH)
	DOUBLE–DUPLEX CONVENIENCE OUTLET
S	TAMPER PROOF DUPLEX CONVENIENCE OUTLET
	CEILING MOUNTED DUPLEX CONVENIENCE OUTLET
	FLOOR MOUNTED DUPLEX CONVENIENCE OUTLET
	SPECIAL PURPOSE OUTLET NEMA CONFIGURATION TO MATCH PLUG
	TELE/DATA OUTLET
C	CEILING MOUNTED TELE/DATA OUTLET
J	JUNCTION BOX
	ELECTRIC MOTOR
	ELECTRICAL PANELBOARD
	DISCONNECT SWITCH
D	SMOKE DETECTOR (CEILING MOUNTED)
F	FIRE ALARM PULL STATION
	FIRE ALARM AUDIO/VISUAL UNIT
	FIRE ALARM STROBE UNIT
	FIRE ALARM DUCT DETECTOR
	FIRE ALARM AUDIO/VISUAL UNIT– CEILING MOUNTED
	FIRE ALARM CONTROL PANEL
T	FIRE ALARM TAMPER SWITCH
F	FIRE ALARM FLOW SWITCH
	FIRE ALARM MONITOR MODULE
CT	COUNTER–TOP–HEIGHT MOUNTED
GFI	GROUND FAULT INTERRUPTER PROTECTED
WP	WEATHERPROOF
S	CEILING SPEAKER (CEILING MOUNTED)
S	SURFACE MOUNTED SPEAKER (CEILING MOUNTED)
	OCCUPANCY SENSOR SWITCH
	CEILING MOUNTED VACANCY SENSOR
	PHOTOELECTRIC CONTROL
$m	MOTOR RATED SWITCH
WAP	WIRELESS ACCESS POINT
C	CLASSROOM CALL STATION
AV	AUDIO/VISUAL STATION
	RV PLUG PEDESTAL

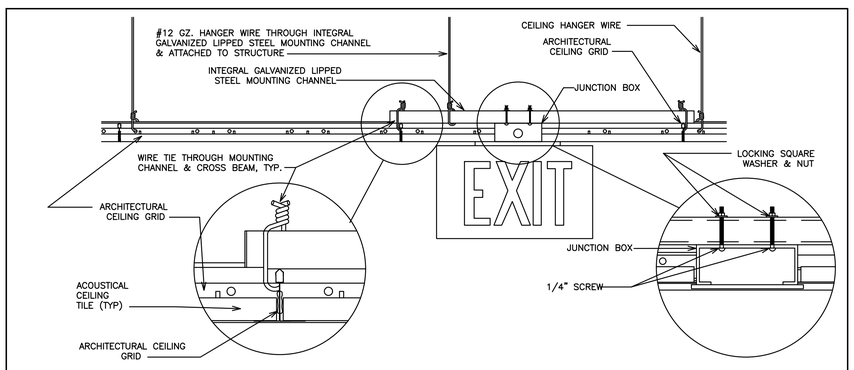

3 EXIT SIGN MOUNTING – LAY–IN CEILING
NO SCALE

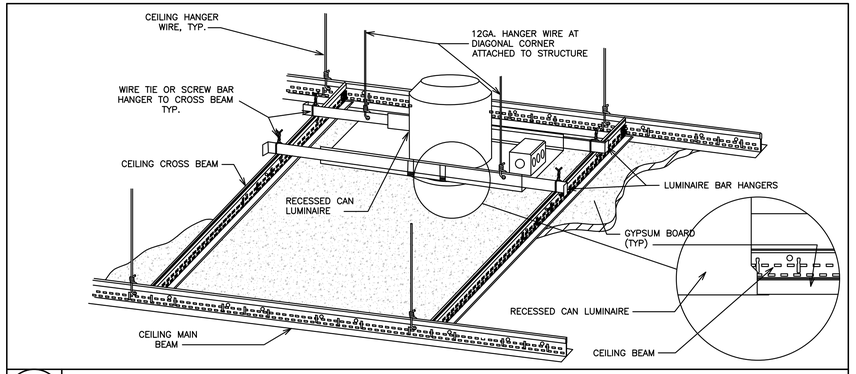

4 DOWNLIGHT MOUNTING – GYPBOARD CEILING
NO SCALE

KING architects INC.
Barry D. King, AIA,
Architect
1312 Sampson St.
Westlake, LA 70669
337.494.0806
www.kingarchitects.net

© COPYRIGHT 2022
ALL INFORMATION, EITHER DRAWN, WRITTEN, OR IMPLIED APPEARING IN THIS DOCUMENT SHALL NOT BE DUPLICATED, DISCLOSED, OR OTHERWISE USED WITHOUT THE WRITTEN PERMISSION OF BARRY D. KING AIA THIS DOCUMENT IS AN INSTRUMENT OF SERVICE AND IS THE SOLE PROPERTY OF THE AUTHOR. FURTHERMORE, THE USE OF THIS DOCUMENT FOR ANY PURPOSE SHALL BE REVOKED, IF THE INTENT OF THE DESIGN OR THE CONSTRUCTION TECHNIQUES OR DETAILS SHOWN HEREIN ARE NOT ADHERED TO OR THE CONTRACTUAL AGREEMENT GOVERNING THEIR USE ARE NOT STRICTLY ADHERED TO.

JOB NO: 2316
DATE: JULY 2025
DRWN. BY: PMB
CHKD. BY: PM

REVISIONS

STATE OF LOUISIANA
DAVID B. STELLY
License No. 26070
08/01/2025
PROFESSIONAL ENGINEER

GREATER ST MARY MISSIONARY BAPTIST
1401 MOELING STREET
LAKE CHARLES, LA 70601
MINISTRY CENTER

ADG ENGINEERING
ASSOCIATED DESIGN GROUP, INC.
3909 W Congress Street, Suite 201
Lafayette, Louisiana 70506
Phone: (337) 234-5710
Email: adginc@adginc.org

Project No. 24232

ELECTRICAL SCHEDULES & DETAILS
ALTERNATE #1

MC-E-501

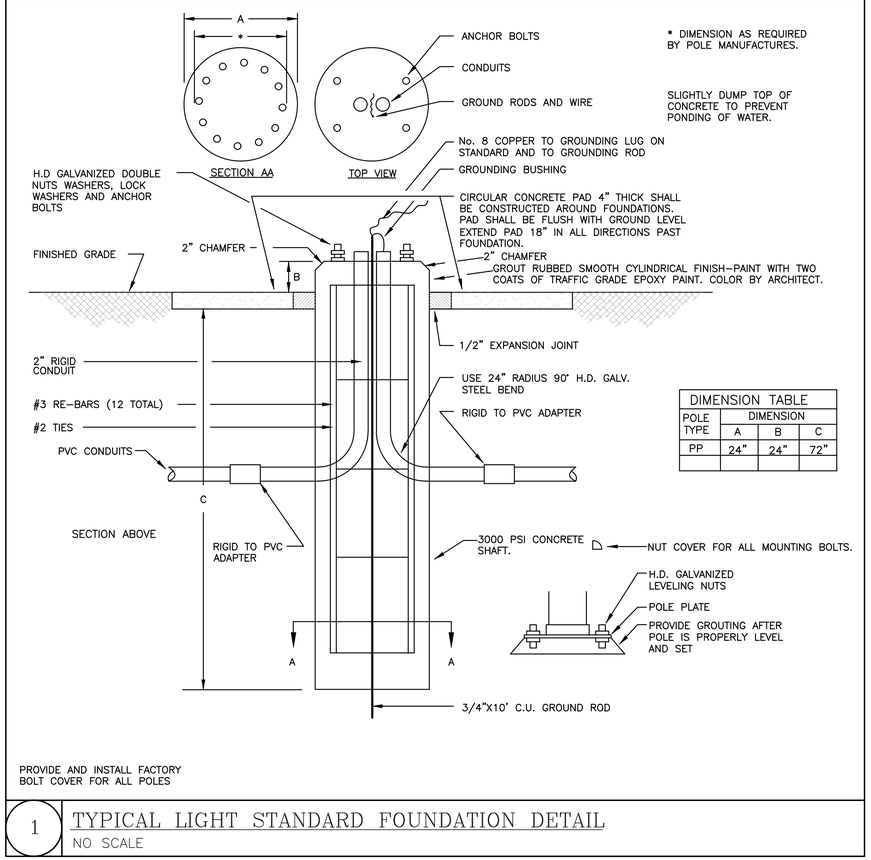

DIMENSION TABLE			
POLE TYPE	DIMENSION		
	A	B	C
PP	24"	24"	72"

1 TYPICAL LIGHT STANDARD FOUNDATION DETAIL
NO SCALE

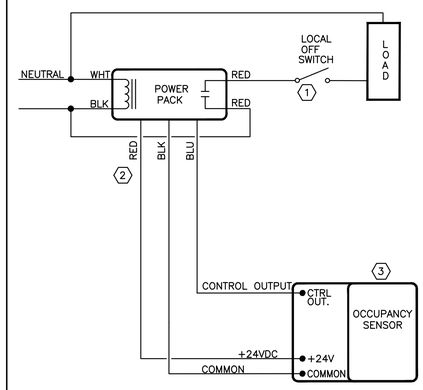

KEYNOTES:

1. PROVIDE AND INSTALL LIGHTING TOGGLE SWITCH(AS SPECIFIED) ON STRIKE SIDE OF DOOR.
2. COLOR DESIGNATIONS OF CONDUCTORS WILL VARY BY MANUFACTURER. CONTRACTOR SHALL OBTAIN LATEST WIRING DIAGRAMS FROM MANUFACTURES USED. THIS WIRING DIAGRAM IS FOR DIAGRAMMATIC PURPOSES ONLY.
3. REFER TO SPECIFICATIONS FOR OCCUPANCY SENSOR REQUIREMENTS.

TYPICAL FOR ROOMS WITH SINGLE, CEILING MOUNTED OCCUPANCY SENSOR CONTROLLING LIGHTING LOAD.

2 SINGLE OCCUPANCY SENSOR WIRING DIAGRAM
NO SCALE

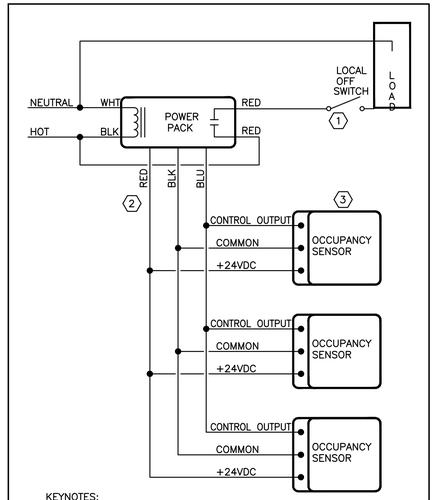

KEYNOTES:

1. PROVIDE AND INSTALL LIGHTING TOGGLE SWITCH(AS SPECIFIED) ON STRIKE SIDE OF DOOR.
2. COLOR DESIGNATIONS OF CONDUCTORS WILL VARY BY MANUFACTURER. CONTRACTOR SHALL OBTAIN LATEST WIRING DIAGRAMS FROM MANUFACTURES USED. THIS WIRING DIAGRAM IS FOR DIAGRAMMATIC PURPOSES ONLY.
3. REFER TO SPECIFICATIONS FOR OCCUPANCY SENSOR REQUIREMENTS.

TYPICAL FOR ROOMS WITH MULTIPLE, CEILING MOUNTED OCCUPANCY SENSOR CONTROLLING LIGHTING LOAD.

4 MULTIPLE OCCUPANCY SENSORS USING ONE
NO SCALE

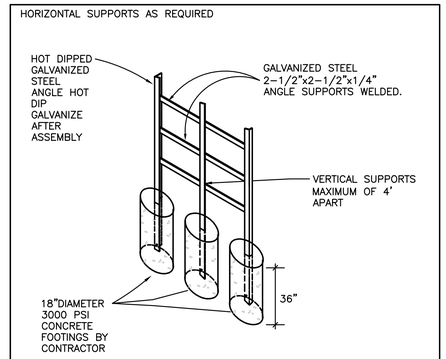

3 UNISTRUT RACK DETAIL
NO SCALE

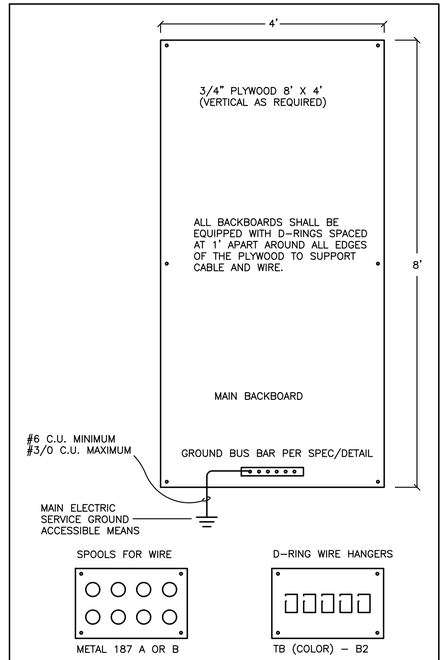

NOTES:

PLYWOOD FOR BACKBOARDS SHALL BE 1" AC INDOOR GRADE, FIREPROOFED AND PAINTED AS SPECIFIED.

COMMON BOND RACKS, PATCH PANELS, CABLE SHIELDS, PROTECTORS, AND THE BUILDING MAIN ELECTRICAL GROUND GROUNDING CONDUCTORS SHALL BE MINIMUM #6 AWG INSULATED AND STRANDED COPPER. FASTENERS SHALL BE RECESSED AND ANCHORED.

SUBMIT DIGITAL PHOTOGRAPHS OF ALL TERMINATION(S) TO MAIN ELECTRIC SERVICE GROUNDING MEANS.

5 TELEPHONE BACKBOARD
NO SCALE

ASSOCIATED DESIGN GROUP, INC.
3909 W Congress Street, Suite 201
Lafayette, Louisiana 70506
Phone: (337) 234-5710
Email: adginc@adginc.org

Project No. 24232

KING architects INC.
Barry D. King, AIA,
Architect
1312 Sampson St.
Westlake, LA 70669
337.494.0806
www.kingarchitects.net

© COPYRIGHT 2022
ALL INFORMATION, EITHER DRAWN, WRITTEN, OR IMPLIED APPEARING IN THIS DOCUMENT SHALL NOT BE DUPLICATED, DISCLOSED, OR OTHERWISE USED WITHOUT THE WRITTEN PERMISSION OF BARRY D. KING AIA. THIS DOCUMENT IS AN INSTRUMENT OF SERVICE AND IS THE SOLE PROPERTY OF THE AUTHOR. FURTHERMORE, THE USE OF THIS DOCUMENT FOR ANY PURPOSE SHALL BE REVOKED, IF THE INTENT OF THE DESIGN OR THE CONSTRUCTION TECHNIQUES OR DETAILS SHOWN HEREIN ARE NOT ADHERED TO OR THE CONTRACTUAL AGREEMENT GOVERNING THEIR USE ARE NOT STRICTLY ADHERED TO.

JOB NO: 2316
DATE: JULY 2025
DRWN. BY: PMB
CHKD. BY: PM

REVISIONS

STATE OF LOUISIANA
DAVID B. STELLY
License No. 26070
08/01/2025
PROFESSIONAL ENGINEER

GREATER ST MARY MISSIONARY BAPTIST
1401 MOELING STREET
LAKE CHARLES, LA 70601
MINISTRY CENTER

ELECTRICAL SCHEDULES & DETAILS
ALTERNATE #1

MC-E-601

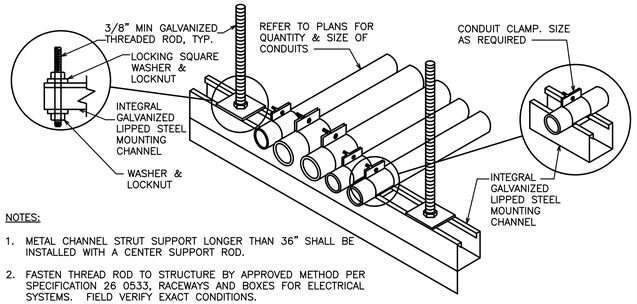

NOTES:

1. METAL CHANNEL STRUT SUPPORT LONGER THAN 36" SHALL BE INSTALLED WITH A CENTER SUPPORT ROD.
2. FASTEN THREAD ROD TO STRUCTURE BY APPROVED METHOD PER SPECIFICATION 26 0533, RACEWAYS AND BOXES FOR ELECTRICAL SYSTEMS. FIELD VERIFY EXACT CONDITIONS.
3. FOR TRAPEZE INSTALLATIONS IN SEISMIC AREAS REFER TO SPECIFICATION SECTION 13 05 41, SEISMIC RESTRAINT REQUIREMENTS FOR NON-STRUCTURAL COMPONENTS.

1 CONDUIT TRAPEZE MOUNTING DETAIL
NO SCALE

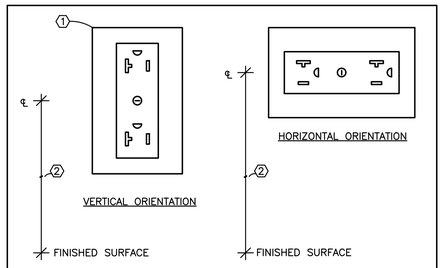

KEYNOTES:
1. REFER TO SPECIFICATIONS FOR RECEPTACLE REQUIREMENTS.
2. MOUNTING HEIGHT IS DENOTED ON LEGEND

2 TYPICAL RECEPTACLE INSTALLATION REQUIREMENTS
NO SCALE

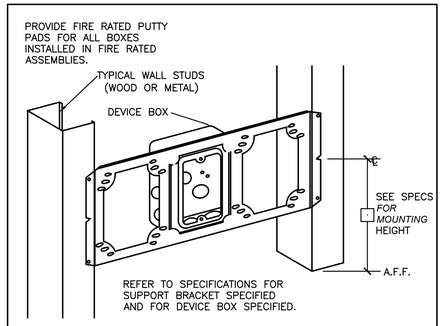

*NOTE: DEVICES FOR ADJACENT ROOMS SHOULD NOT BE INSTALLED IN THE SAME STUD SPACE.

3 BOX MOUNTING BRACKET DETAIL
NO SCALE

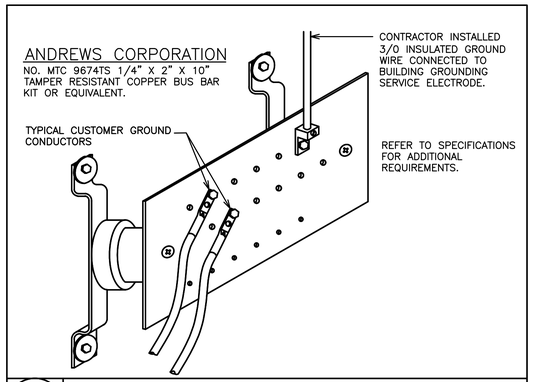

4 TELE/DATA/CATV – GROUND DETAIL (BACK BOARD AND EVERY CLOSET)
NO SCALE

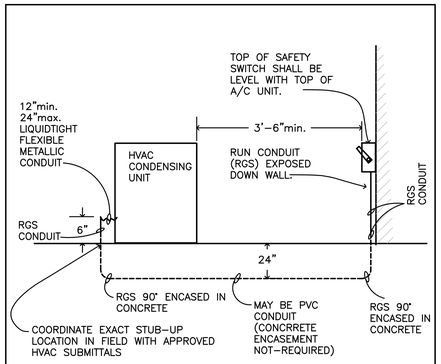

5 TYPICAL HVAC CONDENSING UNIT INSTALLATION DETAIL
NO SCALE

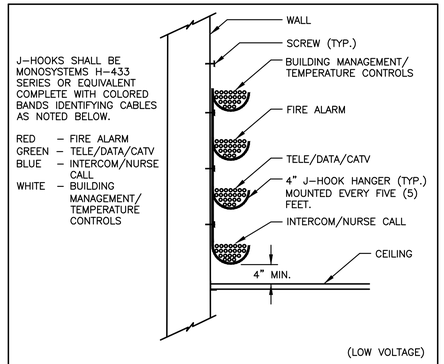

J-HOOKS SHALL BE MONOSYSTEMS H-433 SERIES OR EQUIVALENT COMPLETE WITH COLORED BANDS IDENTIFYING CABLES AS NOTED BELOW.

RED – FIRE ALARM
GREEN – TELE/DATA/CATV
BLUE – INTERCOM/NURSE CALL
WHITE – BUILDING MANAGEMENT/ TEMPERATURE CONTROLS

6 J-HOOK DETAIL FOR COMM. CABLES
NO SCALE

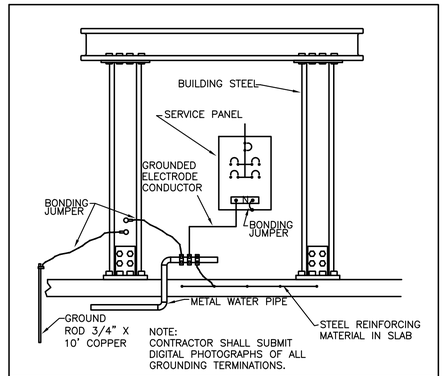

NOTE: CONTRACTOR SHALL SUBMIT DIGITAL PHOTOGRAPHS OF ALL GROUNDING TERMINATIONS.

7 GROUNDING TO BLDG. STEEL DETAIL
NO SCALE

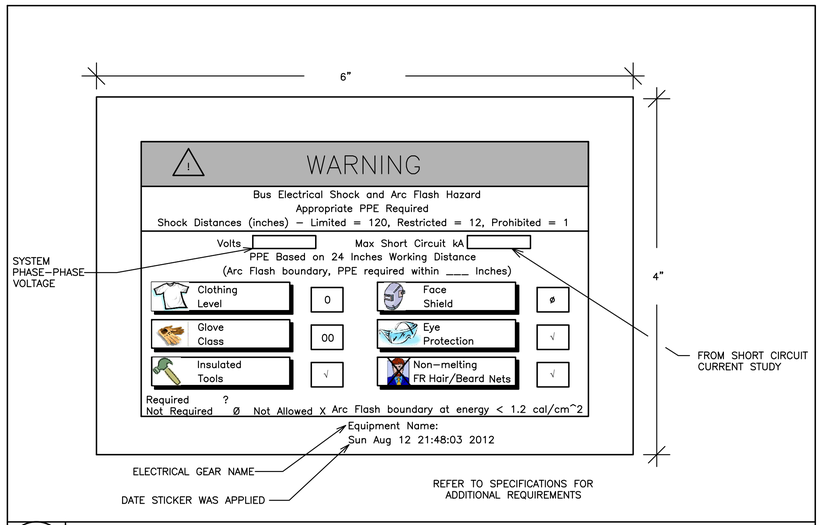

8 ARC FLASH LABELING DETAIL
NO SCALE

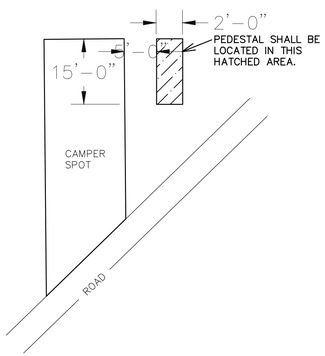

9 ELECTRICAL PEDESAL LOCATION ON BACK-IN SITE
NO SCALE

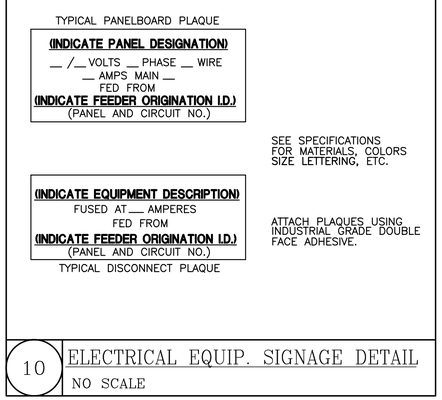

10 ELECTRICAL EQUIP. SIGNAGE DETAIL
NO SCALE

KING architects INC.
Barry D. King, AIA,
Architect
1312 Sampson St.
Westlake, LA 70669
337.494.0806
www.kingarchitects.net

© COPYRIGHT 2022
ALL INFORMATION, EITHER DRAWN, WRITTEN, OR IMPLIED APPEARING IN THIS DOCUMENT SHALL NOT BE DUPLICATED, DISCLOSED, OR OTHERWISE USED WITHOUT THE WRITTEN PERMISSION OF BARRY D. KING AIA THIS DOCUMENT IS AN INSTRUMENT OF SERVICE AND IS THE SOLE PROPERTY OF THE AUTHOR. FURTHERMORE, THE USE OF THIS DOCUMENT FOR ANY PURPOSE SHALL BE REVOKED, IF THE INTENT OF THE DESIGN OR THE CONSTRUCTION TECHNIQUES OR DETAILS SHOWN HEREIN ARE NOT ADHERED TO OR THE CONTRACTUAL AGREEMENT GOVERNING THEIR USE ARE NOT STRICTLY ADHERED TO.

JOB NO: 2316
DATE: JULY 2025
DRWN. BY: PMB
CHKD. BY: PM

REVISIONS

STATE OF LOUISIANA
DAVID B. STELLY
License No. 26070
08/01/2025
PROFESSIONAL ENGINEER

GREATER ST MARY MISSIONARY BAPTIST
1401 MOELING STREET
LAKE CHARLES, LA 70601
MINISTRY CENTER

ADG ENGINEERING
ASSOCIATED DESIGN GROUP, INC.
3909 W Congress Street, Suite 201
Lafayette, Louisiana 70506
Phone: (337) 234-5710
Email: adginc@adginc.org

Project No. 24232

ELECTRICAL DETAILS

ALTERNATE #1

MC-E-701

PANEL MPB

VOLTAGE ☐ 480/277V, 3ø, 4W, WYE
■ 208/120V, 3ø, 4W, WYE
☐ 240/120V, 3ø, 4W, DELTA W/ 3ø "STINGER"

1600 AMP ■ FACTORY MAIN CIRCUIT BREAKER
☐ SHUNT TRIP MAIN CB
☐ MAIN LUGS ONLY
☐ UL LISTED FEED-THRU LUGS

NEUTRAL ■ 100% ☐ 200%

MOUNTING ☐ SURFACE ☐ RECESSED
■ FREE STANDING (FRONT ACCESS ONLY)
☐ FREE STANDING (FRONT AND REAR ACCESS)

ENCLOSURE ☐ NEMA 1 (TOOL-LESS DOOR-IN-DOOR CONSTRUCTION)
■ NEMA 3R
☐ NEMA 4X 320 STAINLESS STEEL
☐ LOCKABLE COVER

FEED ☐ TOP
■ BOTTOM

BRANCHES ■ BOLT-ON, PANELBOARD CONSTR.
☐ FUSIBLE SWITCHES, FURNISH ALL FUSES, RK5
☐ PLUG-ON, LOADCENTER CONSTR.

AIC RATING 22,000
■ FULLY RATED
☐ SERIES RATED

■ FURNISH GROUND BAR KIT
☐ FURNISH ADDITIONAL ISOLATED GROUND BAR KIT
☐ SERVICE ENTRANCE LABEL

ALL COPPER BUSSING

CKT. #	TRIP AMPS	WIRE	GND	COND.	LOAD DESCRIPTION	NOTES	A B C	NOTES	LOAD DESCRIPTION	COND.	GND	WIRE	TRIP AMPS	CKT. #
1	350	#500	3	3-1/2"	PANEL 'LPB'	--		--	PANEL 'MK'	2"	6	1	125	2
3														4
5														6
7	600	2 Sets	1	3"	PANEL 'MB'	--		--	PANEL 'LPB2'	2"	6	2/0	175	8
9		#350												10
11														12
13	100	3	8	1-1/2"	PANEL 'ITB'	--		--	PANEL "BB"	3"	#4	#350	300	14
15														16
17														18
19														20
21														22
23														24
25														26
27														28
29														30
31														32
33														34
35														36
37								--	SPD	1-1/4"	8	3	100	38
39														40
41														42

NOTES:

TOTAL LOAD = 454.48 KVA
TOTAL AMPS = 1262.46 AMPS

PANEL MB - Mechanical

VOLTAGE ☐ 480/277V, 3ø, 4W, WYE
■ 208/120V, 3ø, 4W, WYE
☐ 240/120V, 3ø, 4W, DELTA W/ 3ø "STINGER"

600 AMP ■ FACTORY MAIN CIRCUIT BREAKER
☐ SHUNT TRIP MAIN CB
☐ MAIN LUGS ONLY
☐ UL LISTED FEED-THRU LUGS

NEUTRAL ■ 100% ☐ 200%

MOUNTING ■ SURFACE ☐ RECESSED
☐ FREE STANDING (FRONT ACCESS ONLY)
☐ FREE STANDING (FRONT AND REAR ACCESS)

ENCLOSURE ■ NEMA 1 (TOOL-LESS DOOR-IN-DOOR CONSTRUCTION)
☐ NEMA 3R
☐ NEMA 4X 320 STAINLESS STEEL
☐ LOCKABLE COVER

FEED ☐ TOP
■ BOTTOM

BRANCHES ■ BOLT-ON, PANELBOARD CONSTR.
☐ FUSIBLE SWITCHES, FURNISH ALL FUSES, RK5
☐ PLUG-ON, LOADCENTER CONSTR.

AIC RATING 22,000
■ FULLY RATED
☐ SERIES RATED

■ FURNISH GROUND BAR KIT
☐ FURNISH ADDITIONAL ISOLATED GROUND BAR KIT
☐ SERVICE ENTRANCE LABEL

ALL COPPER BUSSING

CKT. #	TRIP AMPS	WIRE	GND	COND.	LOAD DESCRIPTION	NOTES	A B C	NOTES	LOAD DESCRIPTION	COND.	GND	WIRE	TRIP AMPS	CKT. #
1	20	12	12	1/2"	E.F.-14 >17	--		--	E.F.-22 >25	1/2"	12	12	20	2
3	20	12	12	1/2"	E.F.-18 >21	--		--	SPARE	--	--	---	20	4
5	20	---	--	--	SPARE	--		--	SPARE	--	--	---	20	6
7	20	---	--	--	SPARE	--		--	SPARE	--	--	---	20	8
9	20	12	12	1/2"	DAMPER	--		--	BCCU-2B	1/2"	12	12	20	10
11	20	---	--	--	SPARE	--								12
13	20	12	12	1/2"	BCCU-3	--		--	BCCU-2A	1/2"	12	12	20	14
15														16
17	20	12	12	1/2"	AC-2-1 >	--		--	AC-2-4 >	1/2"	12	12	20	18
19														20
21	20	12	12	1/2"	AC-2-11 >	--		--	SPARE	--	--	---	20	22
23								--	SPARE	--	--	---	20	24
25	20	---	--	--	SPARE	--		--	SPARE	--	--	---	20	26
27	20	---	--	--	SPARE	--		--	SPARE	--	--	---	20	28
29	100	3	8	1-1/2"	AHU-9	--		A,B	CU-9	1"	10	6	60	30
31														32
33														34
35	90	3	8	1-1/2"	MSCU-3A	A,B		A,B	MSCU-2A	1-1/2"	8	3	90	36
37														38
39														40
41	175	2/0	6	2"	PAHU-1	A,B		A,B	PAHU-2	2"	6	2/0	175	42
43														44
45														46
47	90	3	8	1-1/2"	MSCU-3B	A,B		A,B	MSCU-2B	1-1/2"	8	3	90	48
49														50
51														52
53	20	--	---	--	SPARE	--		--	SPARE	--	--	---	20	54
55	20	--	---	--	SPARE	--		--	SPACE	--	--	---	--	56
57	--	--	--	--	SPACE	--		--	SPACE	--	--	---	--	58
59	--	--	--	--	SPACE	--		--	SPACE	--	--	---	--	60
61	--	--	--	--	SPACE	--		--	SPD	1-1/4"	8	3	100	62
63	--	--	--	--	SPACE	--								64
65	--	--	--	--	SPACE	--								66

NOTES:

TOTAL LOAD = 192.99 KVA
TOTAL AMPS = 536.10 AMPS

A. ALL CONDENSING UNIT BREAKERS SHALL BE TYPE "HACR"
B. ALL MECHANICAL EQUIPMENT BREAKERS SHALL BE LOCKABLE TYPE

PANEL LPB

VOLTAGE ☐ 480/277V, 3ø, 4W, WYE
■ 208/120V, 3ø, 4W, WYE
☐ 240/120V, 3ø, 4W, DELTA W/ 3ø "STINGER"

350 AMP ■ FACTORY MAIN CIRCUIT BREAKER
☐ SHUNT TRIP MAIN CB
☐ MAIN LUGS ONLY
☐ UL LISTED FEED-THRU LUGS

NEUTRAL ■ 100% ☐ 200%

MOUNTING ■ SURFACE ☐ RECESSED
☐ FREE STANDING (FRONT ACCESS ONLY)
☐ FREE STANDING (FRONT AND REAR ACCESS)

ENCLOSURE ■ NEMA 1 (TOOL-LESS DOOR-IN-DOOR CONSTRUCTION)
☐ NEMA 3R
☐ NEMA 4X 320 STAINLESS STEEL
☐ LOCKABLE COVER

FEED ☐ TOP
■ BOTTOM

BRANCHES ■ BOLT-ON, PANELBOARD CONSTR.
☐ FUSIBLE SWITCHES, FURNISH ALL FUSES, RK5
☐ PLUG-ON, LOADCENTER CONSTR.

AIC RATING 22,000
■ FULLY RATED
☐ SERIES RATED

■ FURNISH GROUND BAR KIT
☐ FURNISH ADDITIONAL ISOLATED GROUND BAR KIT
☐ SERVICE ENTRANCE LABEL

ALL COPPER BUSSING

CKT. #	TRIP AMPS	WIRE	GND	COND.	LOAD DESCRIPTION	NOTES	A B C	NOTES	LOAD DESCRIPTION	COND.	GND	WIRE	TRIP AMPS	CKT. #
1	20	12	12	1/2"	LIGHTING	--		--	LIGHTING	1/2"	12	12	20	2
3	20	12	12	1/2"	LIGHTING	--		--	LIGHTING	1/2"	12	12	20	4
5	20	12	12	1/2"	HALL LIGHTING	--		--	LIGHTING	1/2"	12	12	20	6
7	20	10	10	3/4"	EXTERIOR BLDG LIGHTS	--		--	ATTIC LIGHTS	1/2"	12	12	20	8
9	20	---	--	--	SPARE	--		--	SPARE	--	--	--	20	10
11	20	---	--	--	SPARE	--		--	SPARE	--	--	---	20	12
13	20	---	--	--	SPARE	--		--	SPARE	--	--	---	20	14
15	20	12	12	1/2"	RECEPT. Server	--		--	RECEPTACLES	1/2"	12	12	20	16
17	20	12	12	1/2"	RECEPTACLES	--		--	RECEPTACLES	1/2"	12	12	20	18
19	20	12	12	1/2"	RECEPTACLES	--		--	RECEPTACLES	1/2"	12	12	20	20
21	20	12	12	1/2"	RECEPT & WHCP	--		--	J-BOX (HandDryer)	1/2"	12	12	20	22
23	20	12	12	1/2"	J-BOX (HandDryer)	--		--	SPARE	--	--	---	20	24
25	20	12	12	1/2"	RECEPTACLE (TV)	--		--	RECEPTACLES	1/2"	12	12	20	26
27	20	12	12	1/2"	RECEPTACLE (TV)	--		--	RECEPTACLES	1/2"	12	12	20	28
29	20	12	12	1/2"	RECEPTACLES	--		A	FACP	1/2"	12	12	20	30
31	20	---	--	--	SPARE	--		A,B	HOOD SUPPRESSION SYS	1/2"	12	12	20	32
33	20	---	--	--	SPARE	--		--	SPARE	--	--	---	20	34
35	20	12	12	1/2"	RECEPTACLES	--		--	RECEPT. (Projector)	1/2"	12	12	20	36
37	20	12	12	1/2"	RECEPTACLES	--		--	RECEPTACLES	1/2"	12	12	20	38
39	20	12	12	1/2"	RECEPTACLES	--		--	RECEPTACLES	1/2"	12	12	20	40
41	20	12	12	1/2"	RECEPT. (Projector)	--		--	RECEPTACLES	1/2"	12	12	20	42
43	20	12	12	1/2"	RECEPTACLES	--		--	RECEPT. (Projector)	1/2"	12	12	20	44
45	20	12	12	1/2"	RECEPTACLES (Hall)	--		--	RECEPTACLES (Hall)	1/2"	12	12	20	46
47	20	12	12	1/2"	RECEPTACLES	--		--	RECEPTACLES	1/2"	12	12	20	48
49	20	12	12	1/2"	RECEPT. (Projector)	--		--	RECEPTACLES	1/2"	12	12	20	50
51	20	12	12	1/2"	RECEPTACLES	--		--	RECEPT. (Projector)	1/2"	12	12	20	52
53	20	12	12	1/2"	RECEPTACLES	--		--	RECEPTACLES	1/2"	12	12	20	54
55	20	12	12	1/2"	RECEPT. (Projector)	--		--	RECEPTACLES	1/2"	12	12	20	56
57	20	12	12	1/2"	RECEPTACLES	--		--	RECEPT. (Projector)	1/2"	12	12	20	58
59	20	12	12	1/2"	RECEPTACLES	--		--	RECEPT. (Projector)	1/2"	12	12	20	60
61	20	12	12	1/2"	RECEPT. & WHCP	--		--	RECEPT. (TelBkd)	1/2"	12	12	20	62
63	20	---	--	--	SPARE	--		--	SPARE	--	--	---	20	64
65	20	---	--	--	SPARE	--		--	SPARE	--	--	---	20	66
67	20	10	10	3/4"	SITE LIGHTING	--		--	SPARE	--	--	---	20	68
69	20	---	--	--	SPARE	--		--	SITE LIGHTING	1"	8	6	20	70
71	20	---	--	--	SPARE	--		--	SPARE	--	--	---	20	72
73	20	10	10	3/4"	POLE RECEPT.	--		--	SPARE	--	--	---	20	74
75	20	---	--	--	SPARE	--		--	WALL HEATER	1/2"	12	12	20	76
77	20	---	--	--	SPARE	--		--	SPACE	--	--	---	20	78
79	20	---	--	--	SPARE	--		--	SPD	1-1/4"	8	3	100	80
81	--	---	--	--	SPACE	--								82
83	--	---	--	--	SPACE	--								84

NOTES:

TOTAL LOAD = 89.69 KVA
TOTAL AMPS = 249.14 AMPS

A. F/A PANEL C/B SHALL BE RED IN COLOR & LOCKED IN THE "ON" POSITION.
B. SHALL BE SHUNT-TRIP C/B

PANEL MK - Kitchen

VOLTAGE ☐ 480/277V, 3ø, 4W, WYE
■ 208/120V, 3ø, 4W, WYE
☐ 240/120V, 3ø, 4W, DELTA W/ 3ø "STINGER"

125 AMP ■ FACTORY MAIN CIRCUIT BREAKER
☐ SHUNT TRIP MAIN CB
☐ MAIN LUGS ONLY
☐ UL LISTED FEED-THRU LUGS

NEUTRAL ■ 100% ☐ 200%

MOUNTING ■ SURFACE ☐ RECESSED
☐ FREE STANDING (FRONT ACCESS ONLY)
☐ FREE STANDING (FRONT AND REAR ACCESS)

ENCLOSURE ■ NEMA 1 (TOOL-LESS DOOR-IN-DOOR CONSTRUCTION)
☐ NEMA 3R
☐ NEMA 4X 320 STAINLESS STEEL
☐ LOCKABLE COVER

FEED ☐ TOP
■ BOTTOM

BRANCHES ■ BOLT-ON, PANELBOARD CONSTR.
☐ FUSIBLE SWITCHES, FURNISH ALL FUSES, RK5
☐ PLUG-ON, LOADCENTER CONSTR.

AIC RATING 22,000
■ FULLY RATED
☐ SERIES RATED

■ FURNISH GROUND BAR KIT
☐ FURNISH ADDITIONAL ISOLATED GROUND BAR KIT
☐ SERVICE ENTRANCE LABEL

ALL COPPER BUSSING

CKT. #	TRIP AMPS	WIRE	GND	COND.	LOAD DESCRIPTION	NOTES	A B C	NOTES	LOAD DESCRIPTION	COND.	GND	WIRE	TRIP AMPS	CKT. #
1	20	12	12	1/2"	RECEPT. (ICE Mach)	--		B	RECEPT. (Washer)	1/2"	12	12	20	2
3								B	DRYER	3/4"	10	10	30	4
5	20	---	--	--	SPARE	--								6
7	20	---	--	--	SPARE	--		--	SPARE	--	--	---	20	8
9	20	12	12	1/2"	RECEPTACLE	B		B	RECEPT. (Referig.)	1/2"	12	12	20	10
11	20	12	12	1/2"	RECEPT. (Freezer)	B		--	SPARE	--	--	---	20	12
13	20	---	--	--	SPARE	--		B	RECEPT.(ServeTable)	1/2"	12	12	20	14
15	20	12	12	1/2"	RECEPT.(ServerTable)	B		B	RECEPTACLES	1/2"	12	12	20	16
17	20	12	12	1/2"	RECEPT. (MicroWave)	B		B	RECEPT. (Mixer)	1/2"	12	12	20	18
19	20	12	12	1/2"	RECEPT. (Warmer)	B		--	SPARE	--	--	---	20	20
21	20	12	12	1/2"	RECEPTACLES	B		A,B	HOOD Exh & Lite	1/2"	12	12	20	22
23	20	12	12	1/2"	DISH WASHER	B		A,B	DOUBLE OVEN	1/2"	12	12	20	24
25	30	12	12	1/2"	DISAPOSAL	B		A,B	DOUBLE OVEN	1/2"	12	12	20	26
27								A,B	GAS RANGE CONTROLS	1/2"	12	12	20	28
29	30	10	10	3/4"	KEF-1	--		--	SPARE	--	--	---	20	30
31	20	---	--	--	SPARE	--		A	HOOD GAS VALVE	1/2"	12	12	20	32
33	20	---	--	--	SPARE	--		--	SPARE	--	--	---	20	34
35	30	12	12	1/2"	MAU-1	--		--	SPARE	--	--	---	20	36
37	20	---	--	--	SPARE	--		--	SPD	1-1/4"	8	3	100	38
39	20	---	--	--	SPARE	--								40
41	20	---	--	--	SPARE	--								42

NOTES:

TOTAL LOAD = 32.16 KVA
TOTAL AMPS = 89.33 AMPS

A. SHALL BE SHUNT-TRIP C/B
B. SHALL BE GFCI C/B

PANEL ITB

VOLTAGE ☐ 480/277V, 3ø, 4W, WYE
■ 208/120V, 3ø, 4W, WYE
☐ 240/120V, 3ø, 4W, DELTA W/ 3ø "STINGER"

100 AMP ■ FACTORY MAIN CIRCUIT BREAKER
☐ SHUNT TRIP MAIN CB
☐ MAIN LUGS ONLY
☐ UL LISTED FEED-THRU LUGS

NEUTRAL ■ 100% ☐ 200%

MOUNTING ■ SURFACE ☐ RECESSED
☐ FREE STANDING (FRONT ACCESS ONLY)
☐ FREE STANDING (FRONT AND REAR ACCESS)

ENCLOSURE ■ NEMA 1 (TOOL-LESS DOOR-IN-DOOR CONSTRUCTION)
☐ NEMA 3R
☐ NEMA 4X 320 STAINLESS STEEL
☐ LOCKABLE COVER

FEED ☐ TOP
■ BOTTOM

BRANCHES ■ BOLT-ON, PANELBOARD CONSTR.
☐ FUSIBLE SWITCHES, FURNISH ALL FUSES, RK5
☐ PLUG-ON, LOADCENTER CONSTR.

AIC RATING 22,000
■ FULLY RATED
☐ SERIES RATED

■ FURNISH GROUND BAR KIT
☐ FURNISH ADDITIONAL ISOLATED GROUND BAR KIT
☐ SERVICE ENTRANCE LABEL

ALL COPPER BUSSING

CKT. #	TRIP AMPS	WIRE	GND	COND.	LOAD DESCRIPTION	NOTES	A B C	NOTES	LOAD DESCRIPTION	COND.	GND	WIRE	TRIP AMPS	CKT. #
1	20	12	12	1/2"	RECEPT. (TelBkd)	--		--	RECEPTACLE	1/2"	12	12	20	2
3	20	12	12	1/2"	DISPLAY SCENE	--		--	SOUND SYSTEM	1/2"	12	12	20	4
5	20	12	12	1/2"	RECEPTACLE	--		--	RECEPTACLE	1/2"	12	12	20	6
7	20	12	12	1/2"	SERVER	--		--	SPARE	--	--	---	20	8
9	20	--	--	--	SPARE	--		--	SPARE	--	--	---	20	10
11	20	--	--	--	SPARE	--		--	IT RACK	3/4"	10	110	30	12
13	20	--	--	--	SPARE	--								14
15	20	--	--	--	SPARE	--								16
17	20	--	--	--	SPARE	--		--	SPARE	--	--	---	20	18
19	20	12	12	1/2"	RECEPT. AV CKT	--		--	RECEPT. AV CKT	1/2"	12	12	20	20
21	20	12	12	1/2"	RECEPT. AV CKT	--		--	RECEPT. AV CKT	1/2"	12	12	20	22
23	20	12	12	1/2"	RECEPT. AV CKT	--								24
25														26
27														28
29														30
31														32
33														34
35														36
37								--	SPD	1-1/4"	8	3	100	38
39														40
41														42

NOTES:

TOTAL LOAD = 23.5 KVA
TOTAL AMPS = 8.486 AMPS

PANEL LPB2

VOLTAGE ☐ 480/277V, 3ø, 4W, WYE
■ 208/120V, 3ø, 4W, WYE
☐ 240/120V, 3ø, 4W, DELTA W/ 3ø "STINGER"

175 AMP ■ FACTORY MAIN CIRCUIT BREAKER
☐ SHUNT TRIP MAIN CB
☐ MAIN LUGS ONLY
☐ UL LISTED FEED-THRU LUGS

NEUTRAL ■ 100% ☐ 200%

MOUNTING ■ SURFACE ☐ RECESSED
☐ FREE STANDING (FRONT ACCESS ONLY)
☐ FREE STANDING (FRONT AND REAR ACCESS)

ENCLOSURE ■ NEMA 1 (TOOL-LESS DOOR-IN-DOOR CONSTRUCTION)
☐ NEMA 3R
☐ NEMA 4X 320 STAINLESS STEEL
☐ LOCKABLE COVER

FEED ☐ TOP
■ BOTTOM

BRANCHES ■ BOLT-ON, PANELBOARD CONSTR.
☐ FUSIBLE SWITCHES, FURNISH ALL FUSES, RK5
☐ PLUG-ON, LOADCENTER CONSTR.

AIC RATING 22,000
■ FULLY RATED
☐ SERIES RATED

■ FURNISH GROUND BAR KIT
☐ FURNISH ADDITIONAL ISOLATED GROUND BAR KIT
☐ SERVICE ENTRANCE LABEL

ALL COPPER BUSSING

CKT. #	TRIP AMPS	WIRE	GND	COND.	LOAD DESCRIPTION	NOTES	A B C	NOTES	LOAD DESCRIPTION	COND.	GND	WIRE	TRIP AMPS	CKT. #
1	20	12	12	1/2"	RECEPTACLE	--		--	RECEPTACLE	1/2"	12	12	20	2
3	20	12	12	1/2"	RECEPTACLE	--		--	RECEPT. (Projector)	1/2"	12	12	20	4
5	20	12	12	1/2"	RECEPTACLE	--		--	RECEPTACLE	1/2"	12	12	20	6
7	20	12	12	1/2"	RECEPT. (Projector)	--		--	RECEPTACLE	1/2"	12	12	20	8
9	20	12	12	1/2"	RECEPTACLE	--		--	RECEPT. (Projector)	1/2"	12	12	20	10
11	20	12	12	1/2"	RECEPTACLE	--		--	RECEPTACLE	1/2"	12	12	20	12
13	20	12	12	1/2"	RECEPT. (Projector)	--		--	RECEPTACLE	1/2"	12	12	20	14
15	20	12	12	1/2"	RECEPTACLE	--		--	RECEPT. (Projector)	1/2"	12	12	20	16
17	20	12	12	1/2"	RECEPTACLE	--		--	RECEPTACLE	1/2"	12	12	20	18
19	20	12	12	1/2"	RECEPT. (Projector)	--		--	RECEPTACLE	1/2"	12	12	20	20
21	20	12	12	1/2"	RECEPTACLE	--		--	RECEPT. (Projector)	1/2"	12	12	20	22
23	20	12	12	1/2"	RECEPTACLE	--		--	RECEPTACLE	1/2"	12	12	20	24
25	20	12	12	1/2"	RECEPT. (Projector)	--		--	RECEPTACLE	1/2"	12	12	20	26
27	20	12	12	1/2"	RECEPTACLE	--		--	RECEPTACLE	1/2"	12	12	20	28
29	20	12	12	1/2"	ATTIC RECEPT.	--		--	SPARE	--	--	---	20	30
31	20	12	12	1/2"	IWH-1	A		A	IWH-3	1/2"	12	12	20	32
33	20	12	12	1/2"	IWH-2	A		A	IWH-4	1/2"	12	12	20	34
35	20	---	--	--	SPARE	--		--	SPACE	--	--	---	--	36
37	--	---	--	--	SPACE	--		--	SPD	1-1/4"	8	3	100	38
39	--	---	--	--	SPACE	--								40
41	--	---	--	--	SPACE	--								42

NOTES:

TOTAL LOAD = 44.84 KVA
TOTAL AMPS = 124.55 AMPS

A. SHALL BE GFCI C/B

KING architects INC.
Barry D. King, AIA,
Architect
1312 Sampson St.
Westlake, LA 70669
337.494.0806
www.kingarchitects.net

© COPYRIGHT 2022
ALL INFORMATION, EITHER DRAWN, WRITTEN, OR IMPLIED APPEARING IN THIS DOCUMENT SHALL NOT BE DUPLICATED, DISCLOSED, OR OTHERWISE USED WITHOUT THE WRITTEN PERMISSION OF BARRY D. KING AIA. THIS DOCUMENT IS AN INSTRUMENT OF SERVICE AND IS THE SOLE PROPERTY OF THE AUTHOR. FURTHERMORE, THE USE OF THIS DOCUMENT FOR ANY PURPOSE SHALL BE REVOKED, IF THE INTENT OF THE DESIGN OR THE CONSTRUCTION TECHNIQUES OR DETAILS SHOWN HEREIN ARE NOT ADHERED TO OR THE CONTRACTUAL AGREEMENT GOVERNING THEIR USE ARE NOT STRICTLY ADHERED TO.

JOB NO: 2316
DATE: JULY 2025
DRWN. BY: PMB
CHKD. BY: PM

REVISIONS

STATE OF LOUISIANA
DAVID B. STELLY
License No. 26070
08/01/2025
PROFESSIONAL ENGINEER

GREATER ST MARY
MISSIONARY BAPTIST
1401 MOELING STREET
LAKE CHARLES, LA 70601
MINISTRY CENTER

ELECTRICAL
PANEL SCHEDULES
MUITI-PURPOSE
BLDG.

ALTERNATE #1

ADG ENGINEERING
ASSOCIATED DESIGN GROUP, INC.
3909 W Congress Street, Suite 201
Lafayette, Louisiana 70506
Phone: (337) 234-5710
Email: adginc@adginc.org

Project No. 24232

MC-E-801

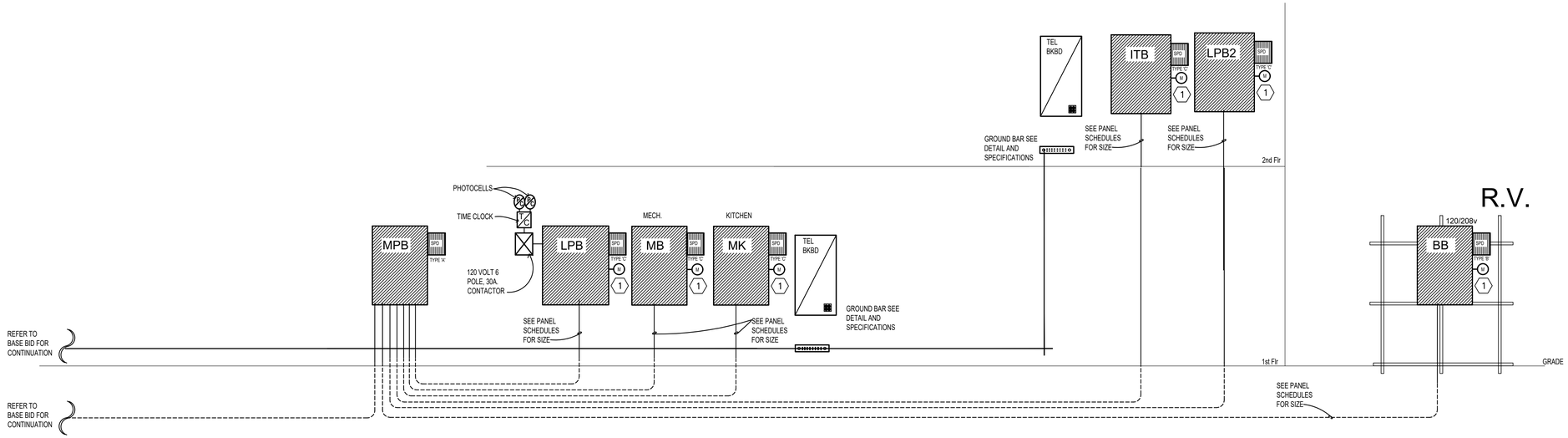

ELECTRICAL RISER DIAGRAM - Multi-purpose Bldg.

NO SCALE

ELECTRICAL KEYNOTES

1. CONTRACTOR SHALL INSTALL ENERGY MONITOR KIT (PACKETPOWER BGP64-64 OR EQUIVALENT).

PANEL BB

VOLTAGE ■ 120/208V, 1ø, 3W ☐ 120/240V, 1ø, 3W

300 AMP ■ FACTORY MAIN CIRCUIT BREAKER ☐ SHUNT TRIP MAIN CB ☐ MAIN LUGS ONLY ☐ UL LISTED FEED-THRU LUGS

NEUTRAL ■ 100% ☐ 200%

MOUNTING ■ SURFACE ☐ RECESSED ☐ FREE STANDING (FRONT ACCESS ONLY) ☐ FREE STANDING (FRONT AND REAR ACCESS)

ENCLOSURE ☐ NEMA 1 (TOOL-LESS DOOR-IN-DOOR CONSTRUCTION) ■ NEMA 3R ☐ NEMA 4X 320 STAINLESS STEEL ☐ LOCKABLE COVER

FEED ☐ TOP ■ BOTTOM

BRANCHES ■ BOLT-ON, PANELBOARD CONSTR. ☐ FUSIBLE SWITCHES, FURNISH ALL FUSES, RK5 ☐ PLUG-ON, LOADCENTER CONSTR.

AIC RATING 22,000 ☐ FULLY RATED ☐ SERIES RATED

■ FURNISH GROUND BAR KIT ☐ FURNISH ADDITIONAL ISOLATED GROUND BAR KIT ☐ SERVICE ENTRANCE LABEL

ALL COPPER BUSSING

CKT. #	TRIP AMPS	WIRE	GND	COND.	LOAD DESCRIPTION	NOTES	A	B	NOTES	LOAD DESCRIPTION	COND.	GND	WIRE	TRIP AMPS	CKT. #
1	100	3	8	1-1/4"	R.V. PLUG	--			--	R.V. PLUG	1-1/4"	8	3	100	2
3															4
5	100	3	8	1-1/4"	R.V. PLUG	--			--	SPARE	--	--	--	20	6
7									--	SPARE	--	--	--	20	8
9	20	---	--	--	SPARE	--			--	SPARE	--	--	--	20	10
11	20	---	--	--	SPARE	--			--	SPARE	--	--	--	20	12
13															14
15															16
17															18
19															20
21															22
23															24
25															26
27															28
29															30
31															32
33															34
35															36
37															38
39									--	SPD	1-1/4"	8	3	100	40
41															42

NOTES:

TOTAL LOAD = 57 KVA
TOTAL AMPS = 240 AMPS

ADG ENGINEERING
ASSOCIATED DESIGN GROUP, INC.
3909 W Congress Street, Suite 201
Lafayette, Louisiana 70506
Phone: (337) 234-5710
Email: adginc@adginc.org

Project No. 24232

KING architects INC.
Barry D. King, AIA, Architect
1312 Sampson St.
Westlake, LA 70669
337.494.0806
www.kingarchitects.net

© COPYRIGHT 2022
ALL INFORMATION, EITHER DRAWN, WRITTEN, OR IMPLIED APPEARING IN THIS DOCUMENT SHALL NOT BE DUPLICATED, DISCLOSED, OR OTHERWISE USED WITHOUT THE WRITTEN PERMISSION OF BARRY D. KING AIA THIS DOCUMENT IS AN INSTRUMENT OF SERVICE AND IS THE SOLE PROPERTY OF THE AUTHOR. FURTHERMORE, THE USE OF THIS DOCUMENT FOR ANY PURPOSE SHALL BE REVOKED, IF THE INTENT OF THE DESIGN OR THE CONSTRUCTION TECHNIQUES OR DETAILS SHOWN HEREIN ARE NOT ADHERED TO OR THE CONTRACTUAL AGREEMENT GOVERNING THEIR USE ARE NOT STRICTLY ADHERED TO.

JOB NO: 2316
DATE: JULY 2025
DRWN. BY: PMB
CHKD. BY: PM

REVISIONS

STATE OF LOUISIANA
DAVID B. STELLY
License No. 26070
08/01/2025
PROFESSIONAL ENGINEER

GREATER ST MARY MISSIONARY BAPTIST
1401 MOELING STREET
LAKE CHARLES, LA 70601
MINISTRY CENTER

ELECTRICAL RISER DIAGRAM MULTI-PURPOSE BLDG

ALTERNATE #1

MC-E-901

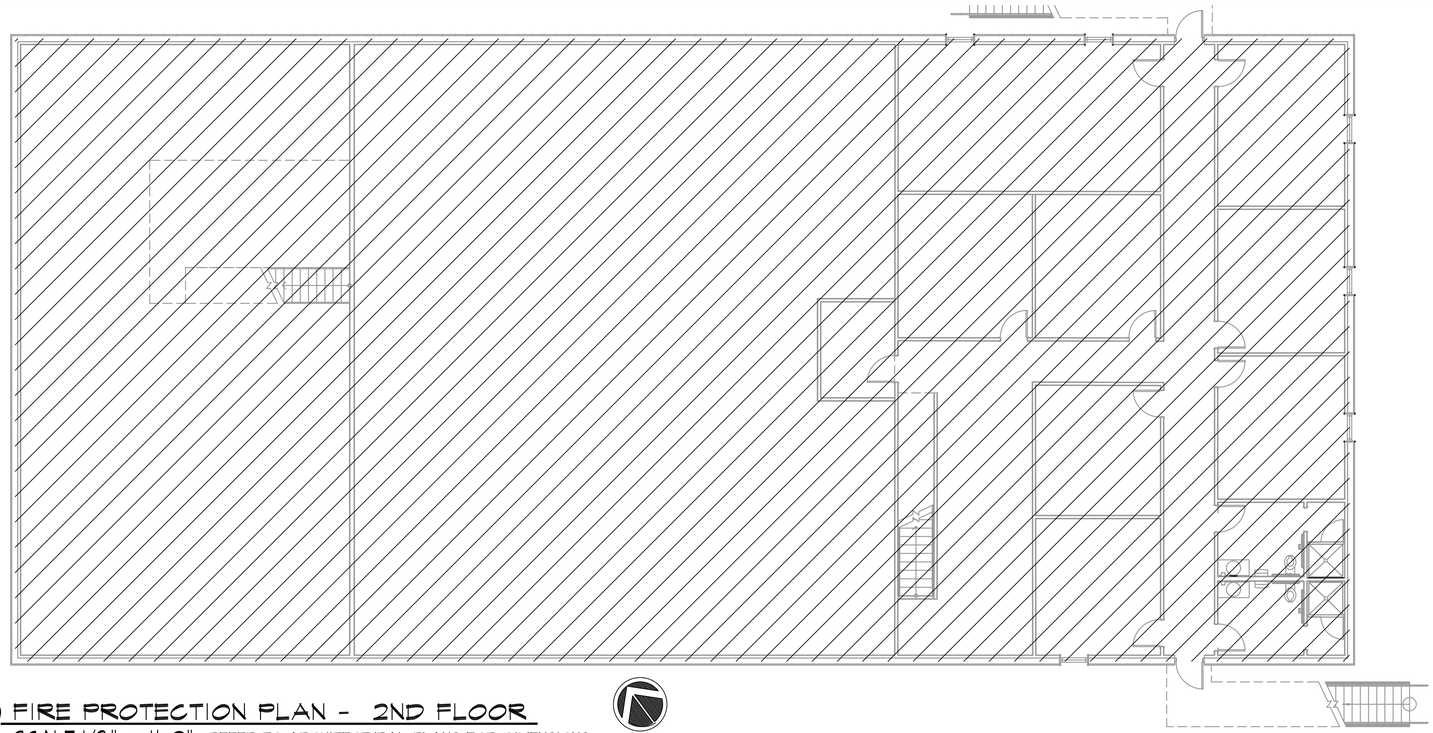

2 FIRE PROTECTION PLAN - 2ND FLOOR

SCALE:1/8" = 1'-0" REFER TO ARCHITECTURAL PLANS FOR DIMENSIONS

NORTH

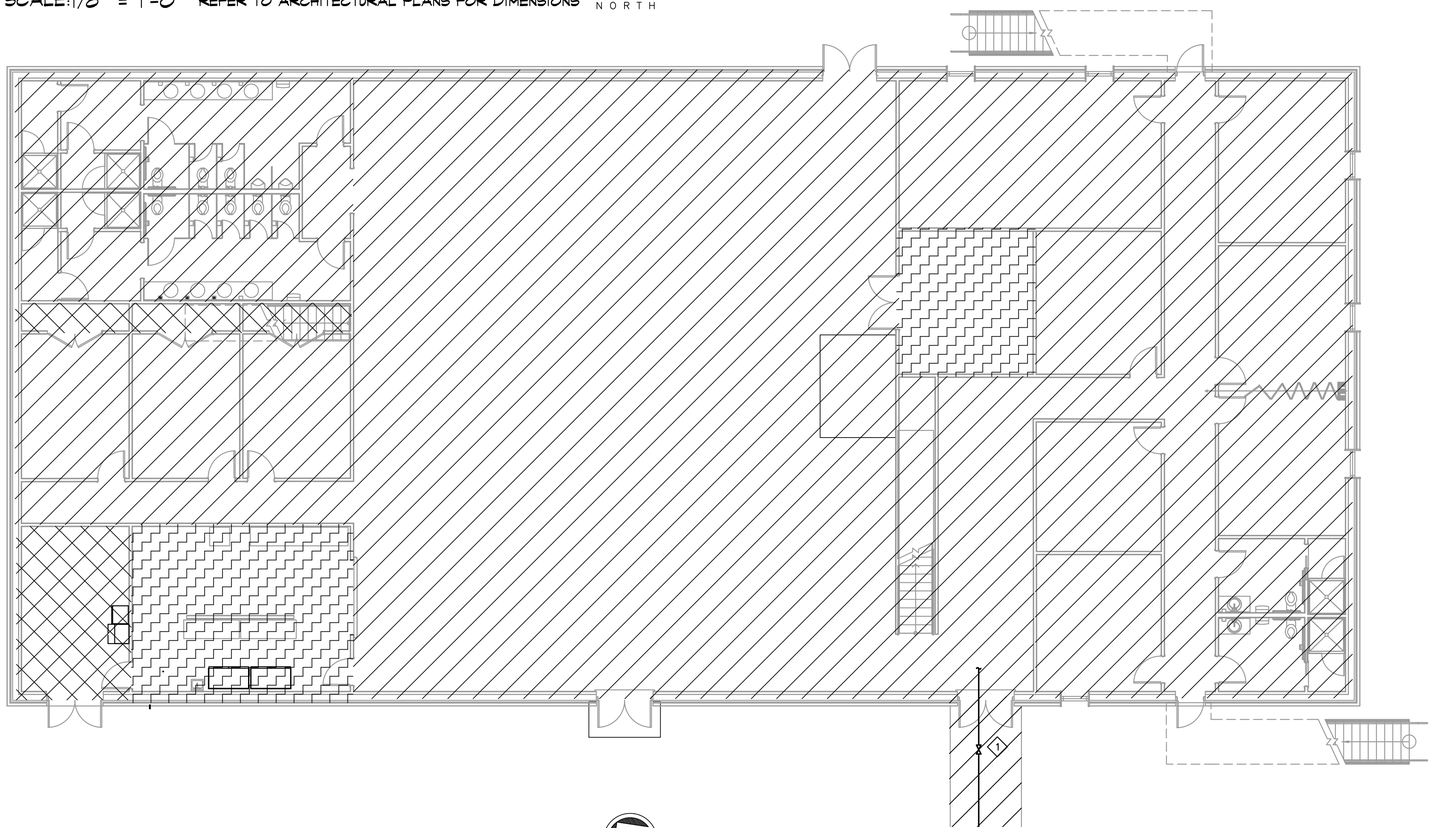

1 FIRE PROTECTION PLAN - 1ST FLOOR

SCALE:1/8" = 1'-0" REFER TO ARCHITECTURAL PLANS FOR DIMENSIONS

NORTH

FIRE PROTECTION KEYNOTES:

1. EXTEND SPRINKLER MAIN TO FEED SPRINKLER SYSTEM FOR MULTIPURPOSE BUILDING. SIZE OF MAIN SHALL BE DETERMINED FROM HYDRAULIC CALCULATIONS. REFER TO SHEET CH-FP-200 FOR CONTINUATION. PROVIDE CONTROL VALVE, FLOW SWITCH, AND INSPECTORS TEST IN-LINE OF PIPING. PIPE DRAIN TO EXTERIOR.

LIGHT HAZARD WET PIPE SPRINKLER SYSTEM THIS AREA

ORDINARY HAZARD GROUP I WET PIPE SPRINKLER SYSTEM THIS AREA

ORDINARY HAZARD GROUP II WET PIPE SPRINKLER SYSTEM THIS AREA

ADG ENGINEERING

ASSOCIATED DESIGN GROUP, INC.
3909 W Congress Street, Suite 201
Lafayette, Louisiana 70506
Phone: (337) 234-5710
Email: adginc@adginc.org

Project No. 24232

KING architects INC.

Barry D. King, AIA,
Architect
1312 Sampson St.
Westlake, LA 70669
337.494.0806
www.kingarchitects.net

© COPYRIGHT 2022
ALL INFORMATION, EITHER DRAWN, WRITTEN, OR IMPLIED APPEARING IN THIS DOCUMENT SHALL NOT BE DUPLICATED, DISCLOSED, OR OTHERWISE USED WITHOUT THE WRITTEN PERMISSION OF BARRY D. KING AIA THIS DOCUMENT IS AN INSTRUMENT OF SERVICE AND IS THE SOLE PROPERTY OF THE AUTHOR. FURTHERMORE, THE USE OF THIS DOCUMENT FOR ANY PURPOSE SHALL BE REVOKED, IF THE INTENT OF THE DESIGN OR THE CONSTRUCTION TECHNIQUES OR DETAILS SHOWN HEREIN ARE NOT ADHERED TO OR THE CONTRACTUAL AGREEMENT GOVERNING THEIR USE ARE NOT STRICTLY ADHERED TO.

JOB NO: 2316
DATE: JULY 2025
DRWN. BY: ET
CHKD. BY: RCC

REVISIONS

STATE OF LOUISIANA
R. CRAIG CAMPBELL, II
License No. 29350
8/1/25
PROFESSIONAL ENGINEER

GREATER ST MARY MISSIONARY BAPTIST
1401 MOELING STREET
LAKE CHARLES, LA 70601
MINISTRY CENTER

FIRE PROTECTION

ALTERNATE #1

MC-FP-201

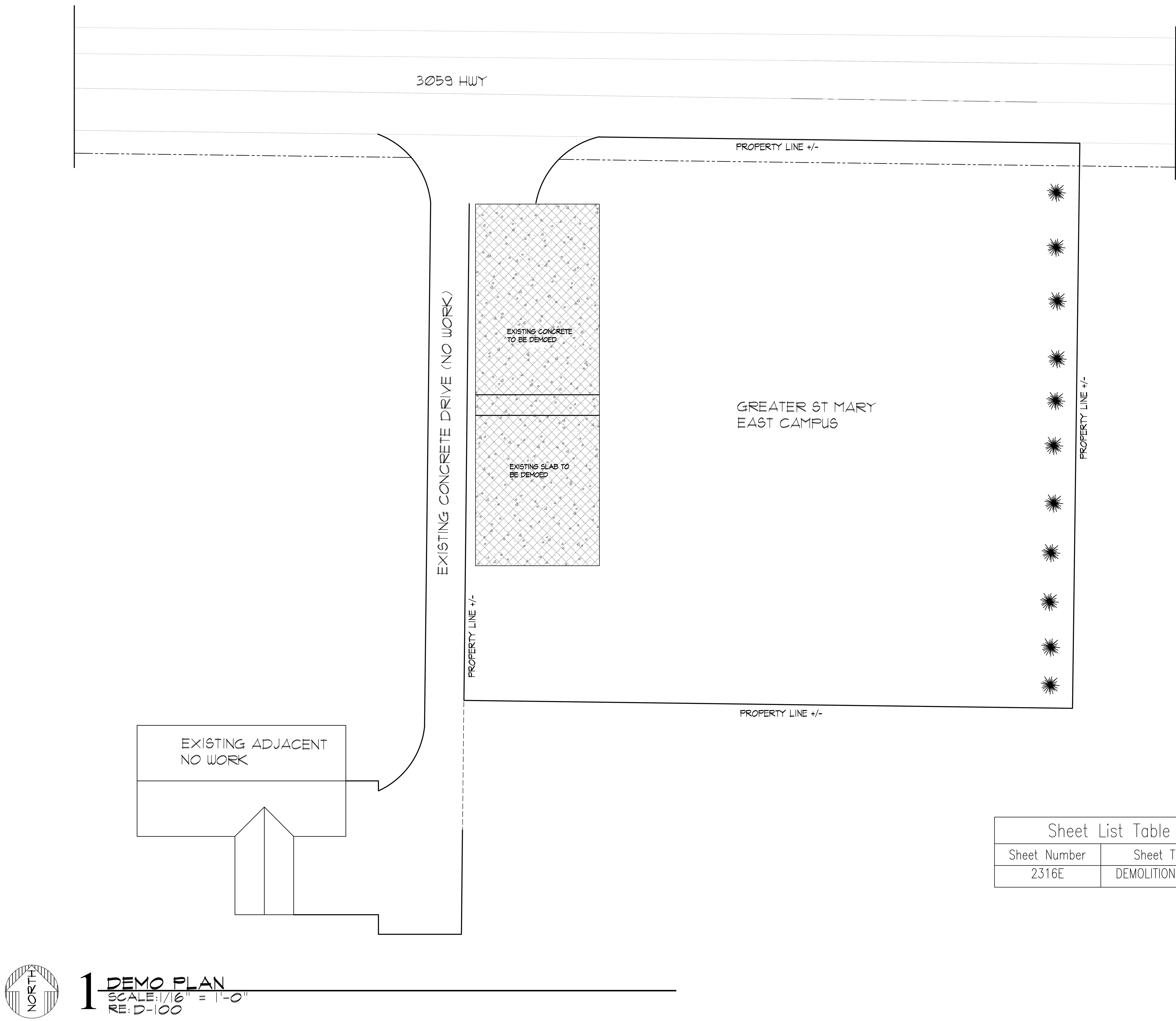

1 DEMO PLAN
SCALE: 1/16" = 1'-0"
RE: D-100

DEMOLITION NOTES:

- CONTRACTOR SHALL BE RESPONSIBLE FOR CONTACTING LA ONE CALL TO IDENTIFY ALL UTILITIES PRIOR TO COMMENCEMENT OF ANY CONSTRUCTION ACTIVITIES
- DEMOLITION SCOPE INCLUDES THE COMPLETE DEMOLITION, REMOVAL AND LAWFUL OFF-SITE DISPOSAL ('DEMOLITION') OF +/- 4,000 SQUARE FEET OF EXISTING CONCRETE FOUNDATION, PAVING AND OR PARKING.
- COMPLETE DEMOLITION OF ALL EXISTING FOUNDATION, CONCRETE FLOOR SLABS, ASSOCIATED CONCRETE PAVING, ETC. NOTED ON DEMOLITION DOCUMENT TO RESULT IN COMPLETE EXPOSURE OF THE NATURAL GROUND,. EXCAVATE TO A MINIMUM DEPTH OF THE LOWEST SHALLOW FOUNDATION MEMBER BELOW ALL STRUCTURES TO BE DEMOLISHED.
- ALL EXISTING UTILITIES TO THE SLAB AREA TO BE DEMOLISHED AND ABANDONED / SURRENDERED IN THE MANNER SATISFACTORY TO THE UTILITY PROVIDER, TO INCLUDE CAPPING / GROUTING / MARKING AT APPROPRIATE LOCATIONS. REMOVAL OF EXISTING SERVICES LINES AS REQUIRED, COORDINATION OF EFFORTS AND ACTIVITIES WITH UTILITY PROVIDERS, ETC.
- ALL IMPROVEMENTS AND PROPERTY THAT ARE TO REMAIN ARE TO BE PROTECTED FROM DAMAGE AND POSITIVE DRAINAGE MUST BE PROVIDED. ANY DAMAGE SHALL BE REPAIRED BY, AND AT THE COST OF, THE CONTRACTOR, WITH NO MODIFICATIONS OF THE CONSTRUCTION CONTRACT.
- TOP 4" OF VEGETATION AND TOPSOIL SHALL BE REMOVED FROM AREA UNDER BUILDING. AREA REMOVED SHALL BE BACKFILLED AND COMPACTED TO 95% STANDARD PROCTOR DENSITY.

Sheet List Table	
Sheet Number	Sheet Title
2316E	DEMOLITION PLAN

FOR BIDS

PRINTED: 6/12/25

KING architects INC.

Barry D. King, AIA, Architect
1312 Sampson St.
Westlake, LA 70669
337-494-0806
www.kingarchitects.net

c COPYRIGHT 2024
ALL INFORMATION, EITHER DRAWN, WRITTEN, OR IMPLIED APPEARING IN THIS DOCUMENT SHALL NOT BE DUPLICATED, DISCLOSED, OR OTHERWISE USED WITHOUT THE WRITTEN PERMISSION OF BARRY D. KING AIA THIS DOCUMENT IS AN INSTRUMENT OF SERVICE AND IS THE SOLE PROPERTY OF THE AUTHOR. FURTHERMORE, THE USE OF THIS DOCUMENT FOR ANY PURPOSE SHALL BE REVOKED, IF THE INTENT OF THE DESIGN OR THE CONSTRUCTION TECHNIQUES OR DETAILS SHOWN HEREIN ARE NOT ADHERED TO OR THE CONTRACTUAL AGREEMENT GOVERNING THEIR USE ARE NOT STRICTLY ADHERED TO.

JOB NO: D-100
DATE: ----
DRWN. BY: BDC
CHKD. BY: BDK

REVISIONS
FOR ESTIMATE
ONLY

BARRY D. KING
REG. NO. 3755
STATE OF LOUISIANA
REGISTERED ARCHITECT

GREATER ST MARY
MISSIONARY BAPTIST
EAST CAMPUS
5525 LA HWY 3059
LAKE CHARLES LA 70615

DEMOLITION PLAN
ALTERNATE #1

D-100