Phone: 0439 559 291 e-mail: enquiries@sscfw.com.au

Trailer Size:	**4900 Series Boat Trailer 750Kg ATM**	
Price:	**$3,435 (including GST)**	
Valid From:	01 October 2026	This trailer quote overrides and cancels all previous written and spoken agreements.

Standard Features:

- ☑ Hot Dipped Galvanised
- ☑ ATM 750Kg
- ☑ Tare 240Kg (Max Load 510Kg)
- ☑ Fits 4.0m – 4.7m Boats
- ☑ Distance Between Guards: 1.47m
- ☑ Trailer Overall Length: 5.01m x 1.964m
- ☑ Brand New 13" Tyres with Hot Dipped Galvanised Rims
- ☑ Spare Tyre (12Kg) & Bracket
- ☑ Ford 5 Stud Hubs / Standard Ford Bearings
- ☑ ADR Standard Heavy Duty Chain & Load Rated Shackle
- ☑ 5-Leaf Slipper Springs Dacromet Treated
- ☑ LED Submersible Tail Lights
- ☑ Free Swing up Jockey Wheel
- ☑ Flat 7 Pin Trailer Plug
- ☑ 750Kg Hand Winch with Strap and Hook
- ☑ Skid Type or Wobble Rollers
- ☑ Fully Welded Body & Chassis (Heavy Duty)
- ☑ Chassis Main Beam Size: 50mm x 70mm x 2.5mm
- ☑ Cross Bar Size: 50mm x 50mm x 2.5mm
- ☑ 45mm Round Solid Axle
- ☑ Manufactured to the Australian Design and Australian Safety Standards
- ☑ 1 Year Limited Warranty (For Personal Use)
- ☑ Onsite 12 Months Queensland Registration (Subject to yearly CPI Increases by CBSD, delivering services via TMR.)

Optional Extras:

Small Round or Large Round Trailer Plug $30
Trailer Coupling / Hitch Lock & Padlock $50

Please note: We do not under any circumstances fit boats onto trailers.

Thank you for your enquiry today.

When ordering trailers from SSCFW Trailers, we operate under the following guidelines:

The average waiting time for a trailer is 7 days. We have other orders to complete and we are filling them as fast as we can.

In order for us to hold a trailer for you, we ask that you pay a minimum deposit of 25% within 5 days from the date of the invoice, as a gesture of your intent to purchase.

You are welcome to pay a deposit, or the full amount, which ever suits you. If we receive your payment in full, your trailer will take priority.

Due to the timely nature of fitting items such as ladder racks, mesh ramps, mower boxes, toolboxes, cages, canvas covers, etc (if any), these items will not be fitted to your trailer until payment has been received in full.

If you change your mind regarding the purchase, your deposit will be refunded less $150 or 6% of the total invoice (which-ever is the lesser amount) for restocking/administration/labour fee.

If no payment is received within 5 days, we retain the right to offer this trailer to the next customer.

If no payment is received within 10 days, and we have been unable to make contact with you, we will cancel your invoice.

If the trailer is to be registered in two names, both people need to be present at time of collection to sign the Application for Registration. If you are unable to collect your own trailer, the trailer will not be released until we have received the appropriate authority forms.

It is important to research your trailer requirements thoroughly. If you have a change of mind after taking delivery of your registered trailer, we are unable to issue a refund or exchange. There is no cooling-off period on the sale of a new trailer. https://www.qld.gov.au/transport/buying/rules/new

Considering finance?

These finance brokers come highly recommended by us. Please tell them we sent you:

- Will Hong from Talk to a Broker. Ph: 0456 789 460. Email: william@talktoabroker.com.au
- Alice Kol from Talk to a Broker. Ph: 0447 068 690. Email: alice@talktoabroker.com.au
- Luke Libke from LL Loans. Ph: 0422 244 250. Email: luke@llloans.com.au

SSCFW
TRAILERS
62 Mines Road, MAREEBA
0439 559 291
SSCFW

SSCFW
TRAILERS
0439 559 291

SSCFW
TRAILERS
62 Mines Road, MAREEBA
0439 559 291
SSCFW

SSCFW
TRAILERS
62 Mines Road, MAREEBA
0439 559 291

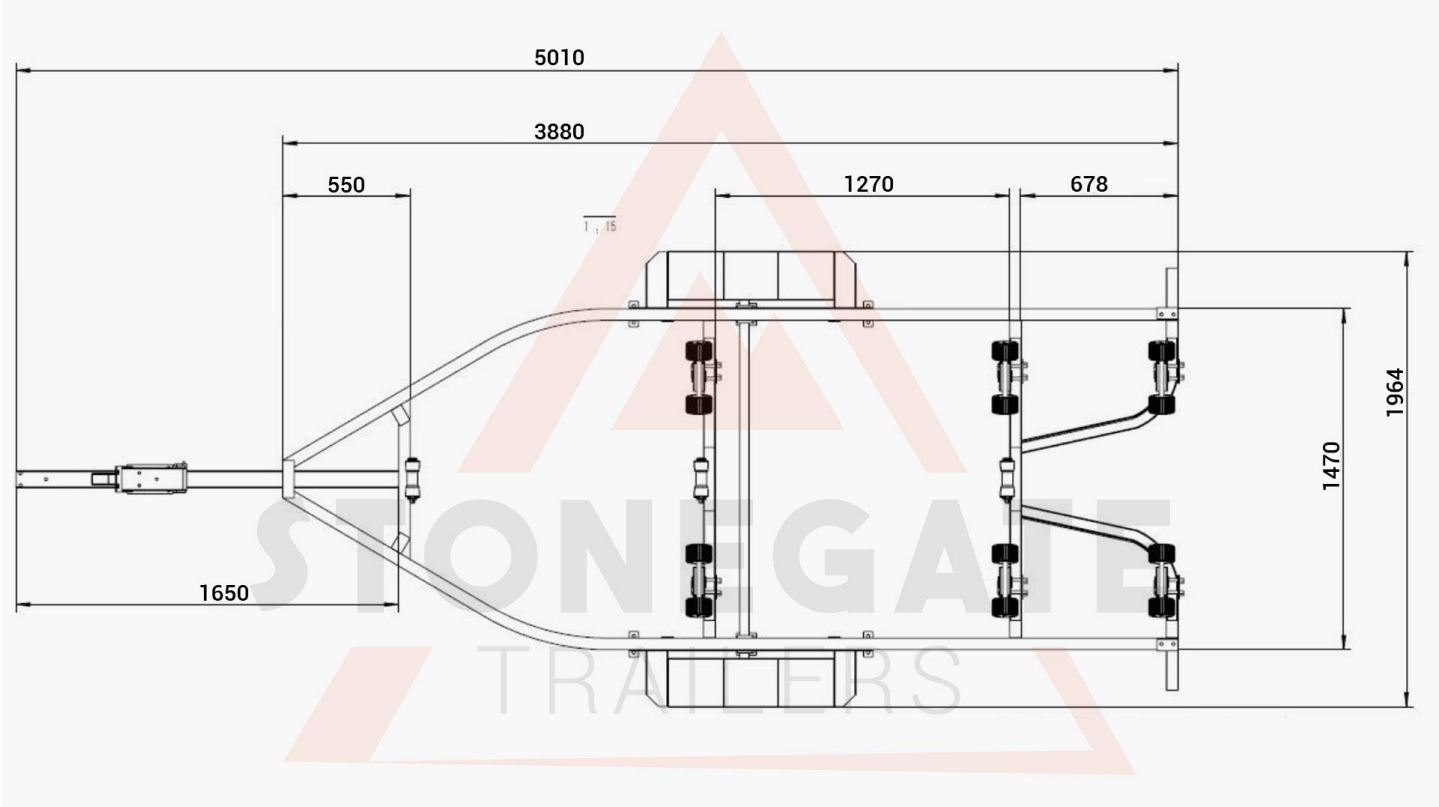
5010
3880
550
1270
678
1964
1470
1650