Load Stacker

INDUSTRIAL KINETICS, INC.

Engineered Conveyor Solutions

Lift and Hold Style

Fork Style

Key Benefits

- Increases productivity - double stacked loads means more product can be inventoried or shipped by a single forklift.
- Decreases product damage due to precise stacking and reduced handling by forklifts.

Common Features

- Choice of lifting methods - Fork style or lift and hold
- Accomodates CHEP, GMA, or PECO pallets.
- Ability to communicate with conveyor, palletizer, or stretchwrapper.

Lift and Hold Features

- Designed for stacking CHEP, GMA, PECO, and Interchanging pallets
- Capable of stacking multiple loads high
- Hydraulic or AC Motor driven lift and pneumatic actuated hold stays
- Load sensing on the stays allowing variable load height detection with no change over
- Load positioning stop for pallet presentation
- PLC Control
- HMI complete with fault display and manual control functions
- 24VDC Control voltage
- Lift maintenance lockout points

Fork Style Features

- Designed for stacking CHEP, GMA, PECO, and Interchanging pallets
- AC Motor driven lift and fork extend / retract
- Variable speed lift
- Load positioning stop for pallet presentation
- PLC Control
- HMI complete with fault display and manual control functions
- 24VDC Control voltage
- Lift maintenance lockout points

Optional Equipment and Accessories

- Custom pallet sizes and styles
- Increased capacity lifts
- Extended Travel
- Increased cycle time capacity
- Fencing and interlocked gates

Specifications subject to change without notice.

Standard Load Stacker Dimensions

Fork Style

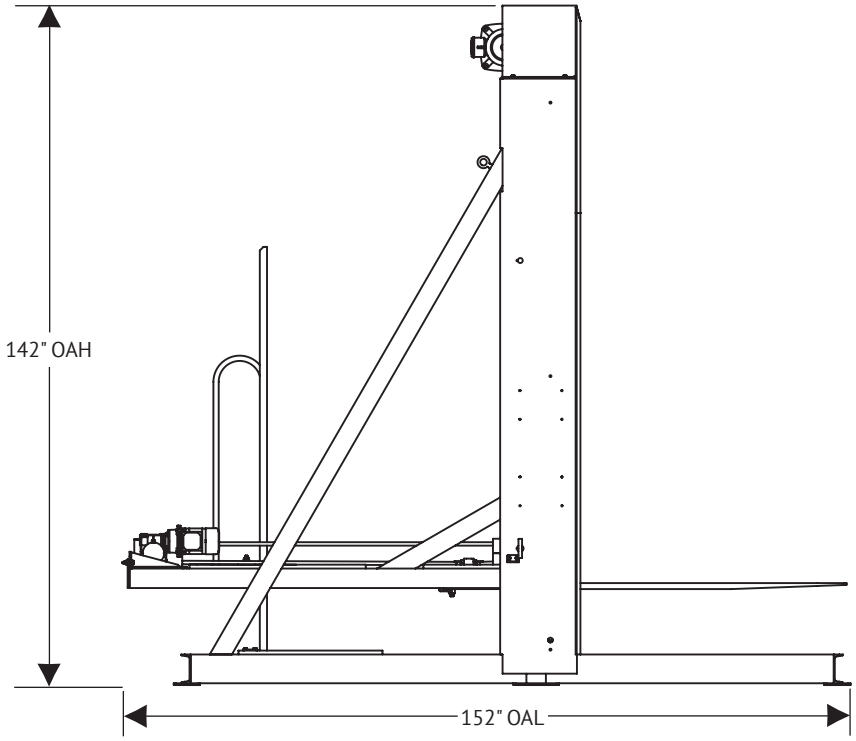

Side View

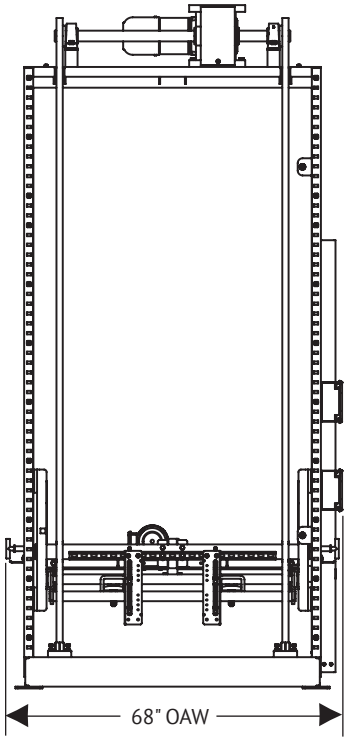

Front View

Lift and Hold Style

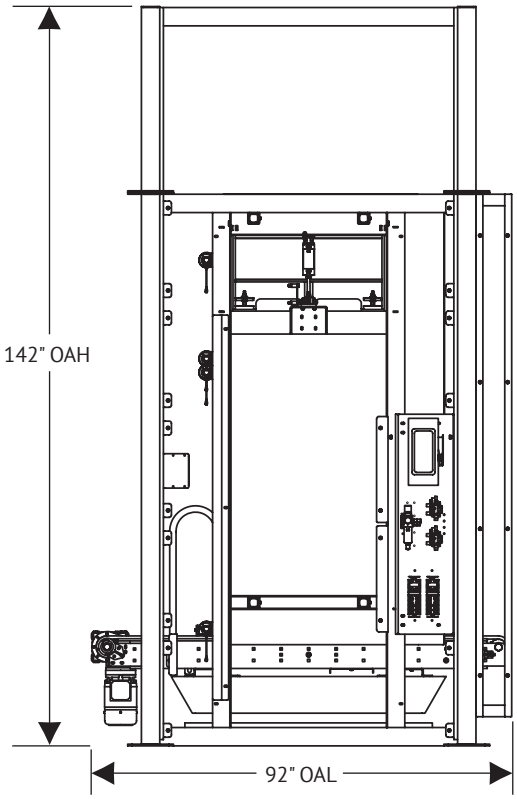

Side View

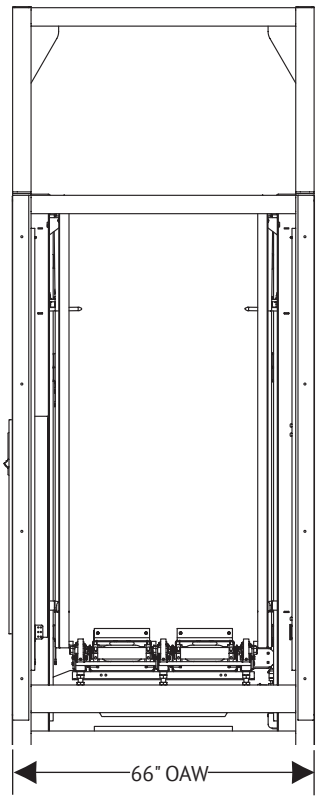

Front View

Additional Standard Conveying Systems

Chain Driven Live Roller Conveyor (CDLR)

Chain Conveyor

Custom Conveyor Systems

- Roller Conveyors
- Drag Chain Conveyors
- Belt Conveyors
- Overhead Conveyors
- Transfer Cars
- Vertical Reciprocating Conveyors
- Turntables
- Shuttle Conveyors
- Coding Conveyors
- Pallet Dispensers/Collectors
- Pallet Inserters/Double Stackers
- Chain Transfer Conveyors
- Accumulation Conveyors
- Assembly Conveyors
- Slat Conveyors

We're Industrial Kinetics....

For over 50 years we've been applying our resources and experience to the creation of innovative material handling concepts that make a quantifiable difference to the bottom lines of our ever-growing list of national and international clients. These are companies that have come to depend on our talented staff of engineers and material handling consultants to quickly solve their everyday problems, and to prepare them for the future with imaginative and efficient designs and equipment that will keep them ahead of their competition for years to come.

INDUSTRIAL KINETICS, INC.
ENGINEERED CONVEYOR SOLUTIONS

2535 Curtiss St. • Downers Grove, IL 60515
800-655-0306 • www.iki.com