ALUMINUM S.A. HOLLOW

MODEL: RACH-602, RACH-604, RACH-606, RACH-608, RACH-6010

Form. #

sales@bia-tools.com www.bia-tools.com

Not all components of cylinder are replacement items, but are illustrated as a convenient reference of location and position in the assembly sequence.

PARTS ILLUSTRATION

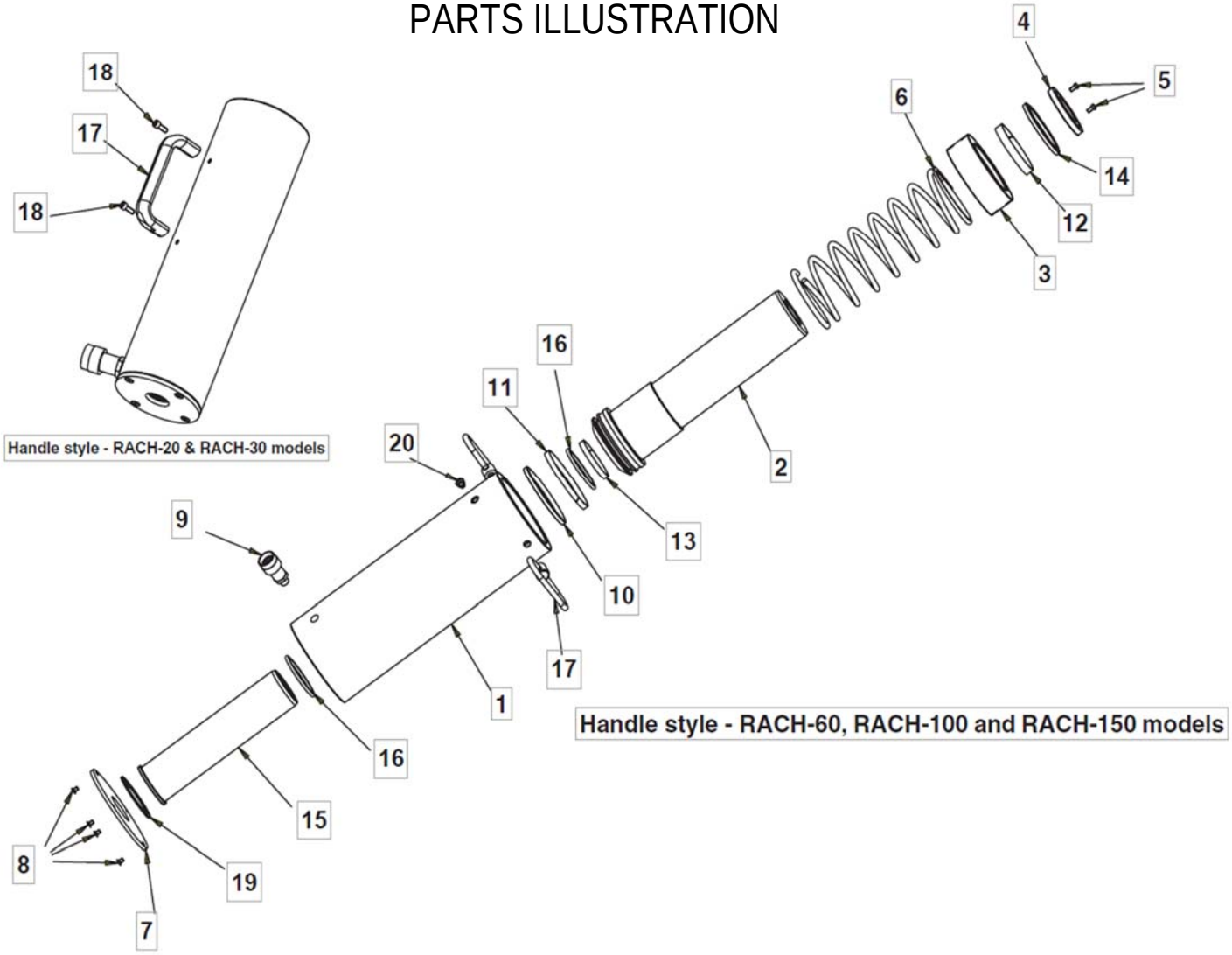

ALUMINUM S.A. HOLLOW

MODEL: RACH-602, RACH-604, RACH-606, RACH-608, RACH-6010

Form. #

sales@bia-tools.com www.bia-tools.com

PARTS LIST

ITEM	DESCRIPTION	QTY	RACH-602	RACH-604	RACH-606	RACH-608	RACH-6010
1	Cylinder Base	1	BT-RACH602-01	BT-RACH604-01	BT-RACH606-01	BT-RACH608-01	BT-RACH6010-01
2	Plunger	1	BT-RACH602-02	BT-RACH604-02	BT-RACH606-02	BT-RACH608-02	BT-RACH6010-02
3	Stop Ring	1	BT-RACH60-03	BT-RACH60-03	BT-RACH60-03	BT-RACH60-03	BT-RACH60-03
4	Saddle (Included #5)	1	BT-RACH60-04	BT-RACH60-04	BT-RACH60-04	BT-RACH60-04	BT-RACH60-04
5	Screw	1	-	-	-	-	-
6	Spring	1	BT-RACH602-06	BT-RACH604-06	BT-RACH606-06	BT-RACH608-06	BT-RACH6010-06
7	Protector Plate (Included #8)	1	BT-RACH60-07	BT-RACH60-07	BT-RACH60-07	BT-RACH60-07	BT-RACH60-07
8	Screw	4	-	-	-	-	-
9	Coupler	1	BT-QCF06	BT-QCF06	BT-QCF06	BT-QCF06	BT-QCF06
10	Piston Seal	1	*	*	*	*	*
11	Piston Wear Ring	1	*	*	*	*	*
12	Rod Wear Ring	1	*	*	*	*	*
13	Center Guide Wear Ring	1	*	*	*	*	*
14	Rod Wiper	1	*	*	*	*	*
15	Center Tube	1	BT-RACH602-15	BT-RACH604-15	BT-RACH606-15	BT-RACH608-15	BT-RACH6010-15
16	Center Guide Seal	2	*	*	*	*	*
17	Handle (Included #18)	2	BT-RACH60-17	BT-RACH60-17	BT-RACH60-17	BT-RACH60-17	BT-RACH60-17
18	Screw	2	-	-	-	-	-
19	Retaining Ring	1	*	*	*	*	*
20	Vent Plug	1	*	*	*	*	*
21	Dust Cap (Not Shown)	1	BT-QCC06	BT-QCC06	BT-QCC06	BT-QCC06	BT-QCC06
*	Repair Kit	1	BT-RACH60-RK	BT-RACH60-RK	BT-RACH60-RK	BT-RACH60-RK	BT-RACH60-RK