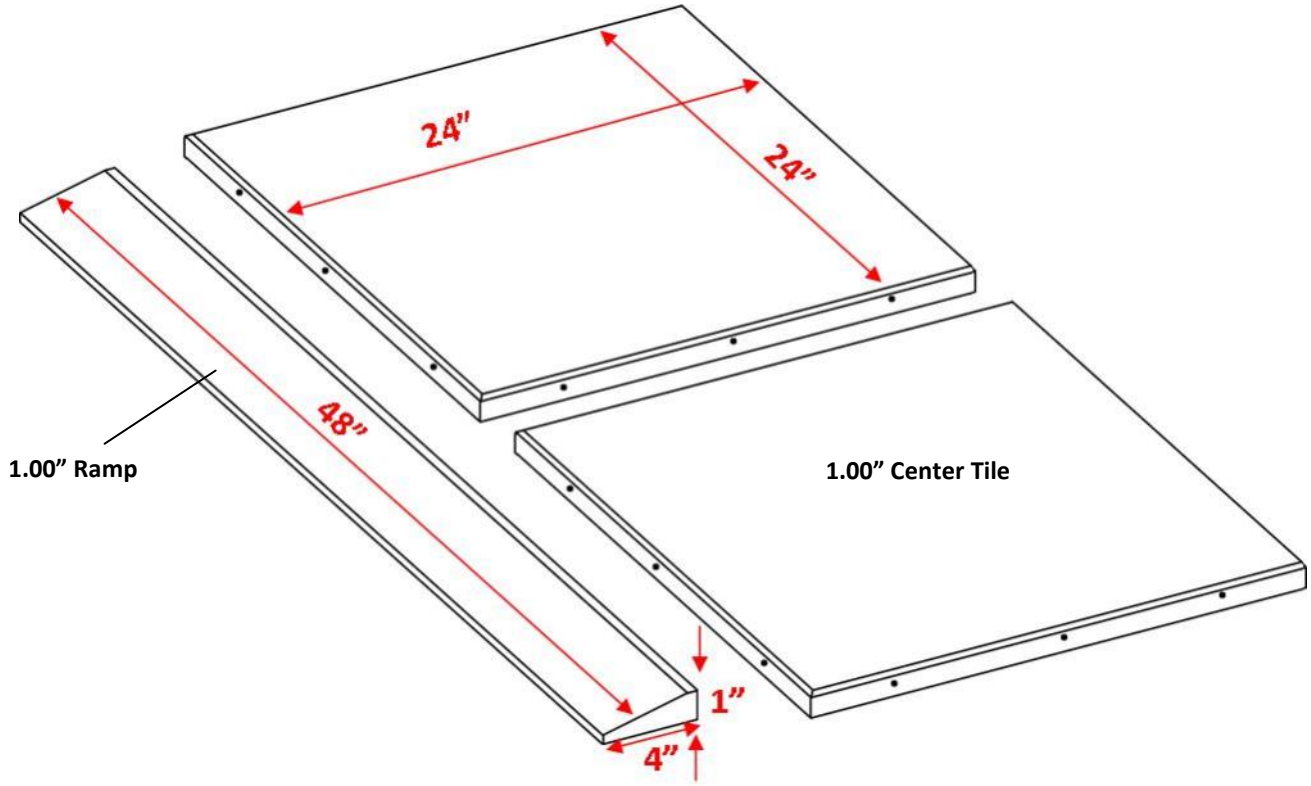

1.00” Typical Layout Assembly

- Tile size: 23 7/8" x 23 7/8" +/- 1/8"
- All measurements are stated at nominal dimension. Recycled rubber tiles are expected to expand and con-tract with variations in temperature and sun exposure.